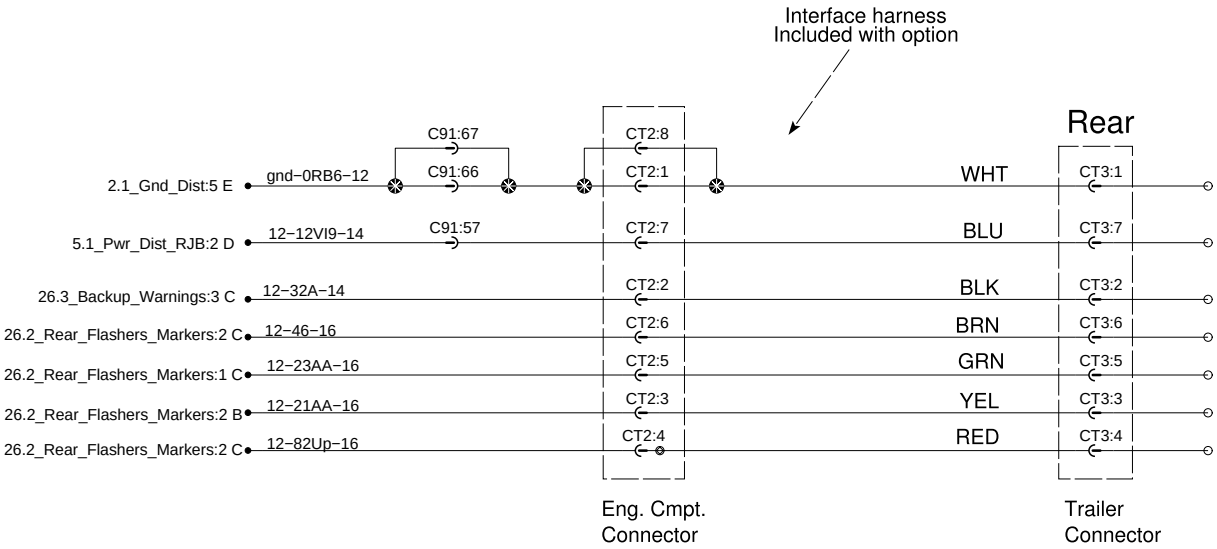Trailer Interface