MAIN DISTRIBUTION Wake−Up

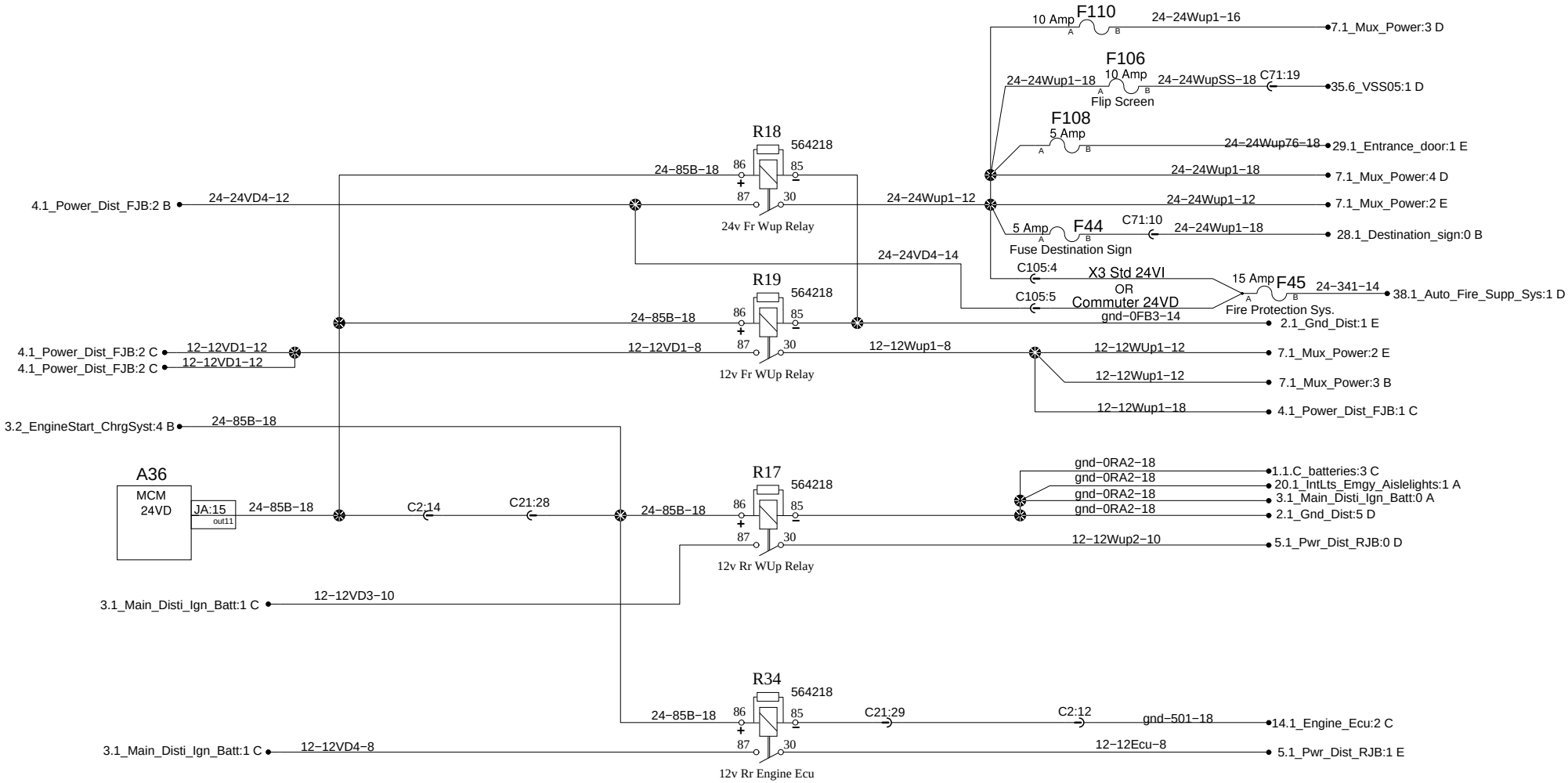

PREVOST®	WIRING DIAGRAM	No:D061150	Page:3.3	Rev:08