Automatic Fire Suppression System

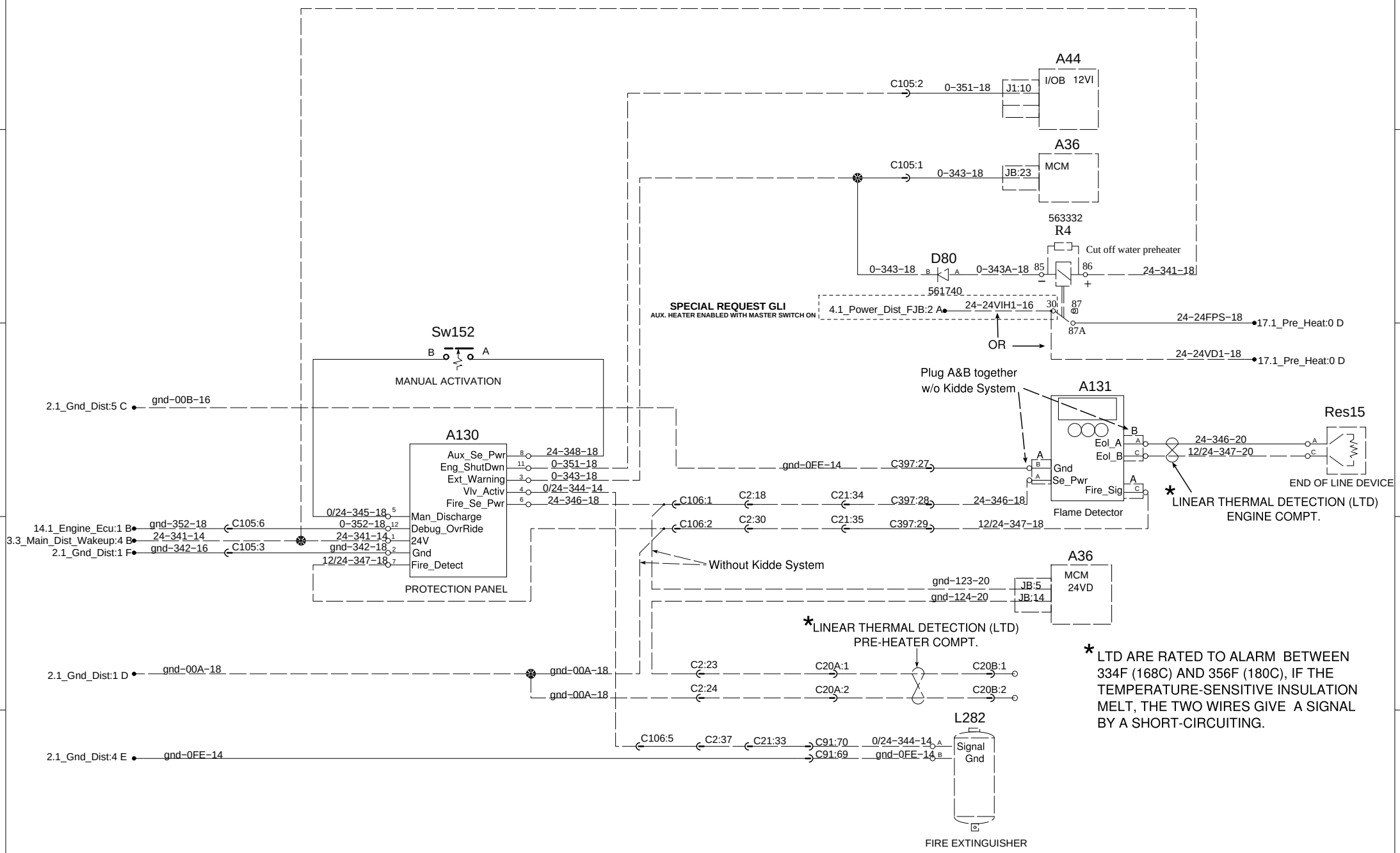

* LTD ARE RATED TO ALARM BETWEEN 334F (168C) AND 356F (180C), IF THE TEMPERATURE-SENSITIVE INSULATION MELT, THE TWO WIRES GIVE A SIGNAL BY A SHORT-CIRCUITING.

PREVOST®	WIRING DIAGRAM	No:D061150	Page:38.1	Rev:03