BATTERIES
STANDARD AND 8D

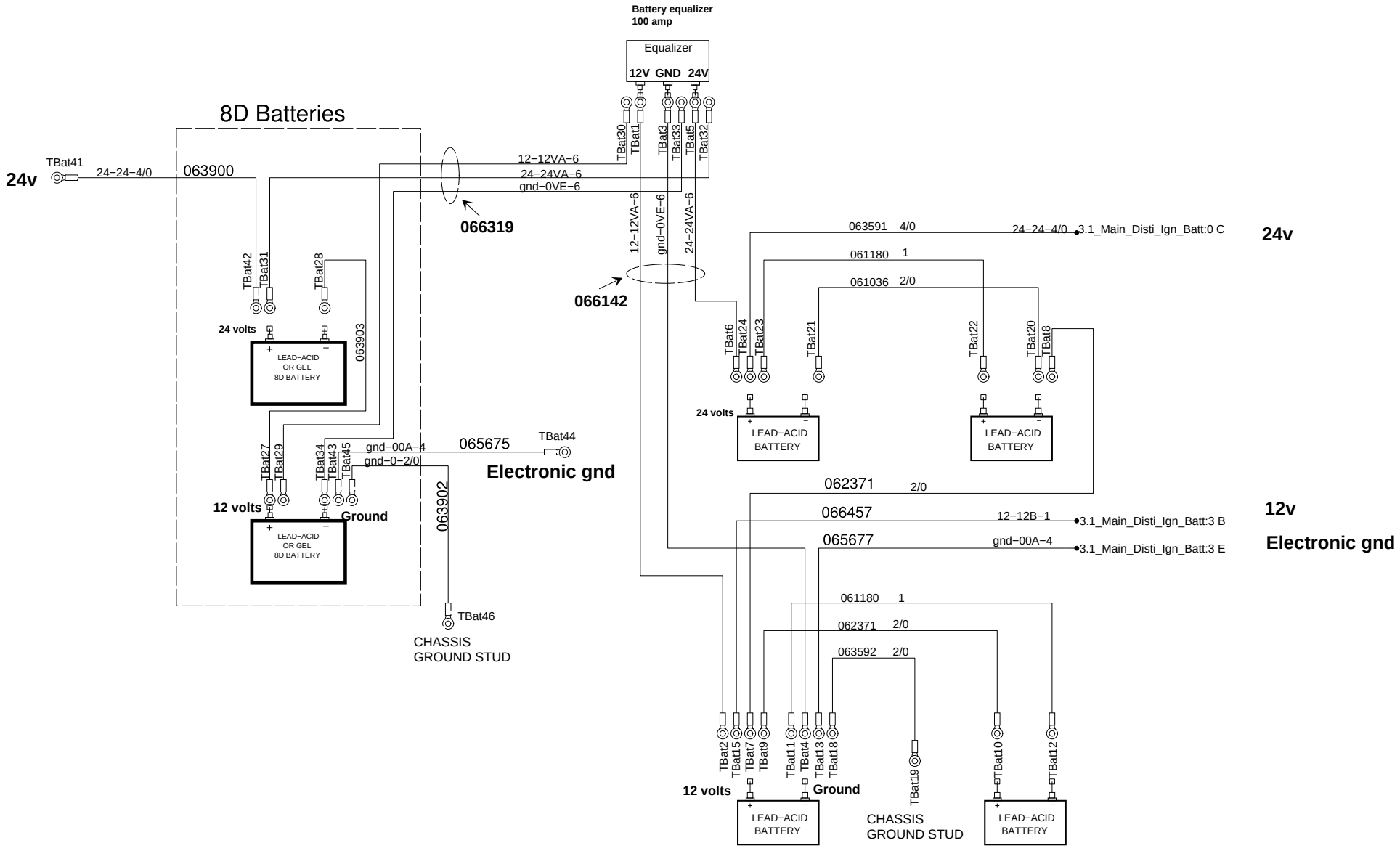

PREVOST®	WIRING DIAGRAM	No:D061160	Page:1.1	Rev:0