Engine Start and Charging system

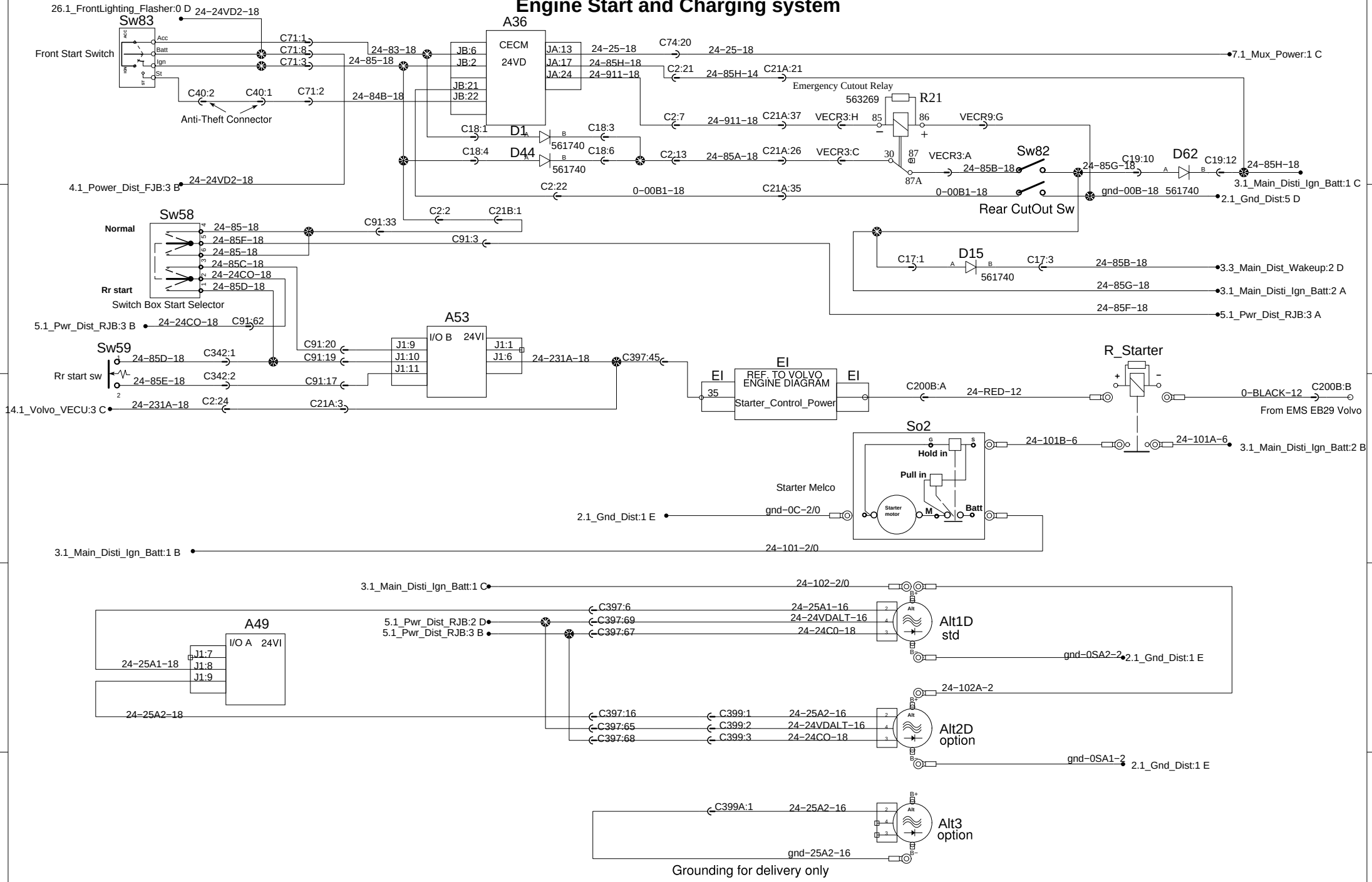

PREVOST®	WIRING DIAGRAM	No:D061160	Page:3.2	Rev:0