Multiplex Can, J1587 Network and Addressing

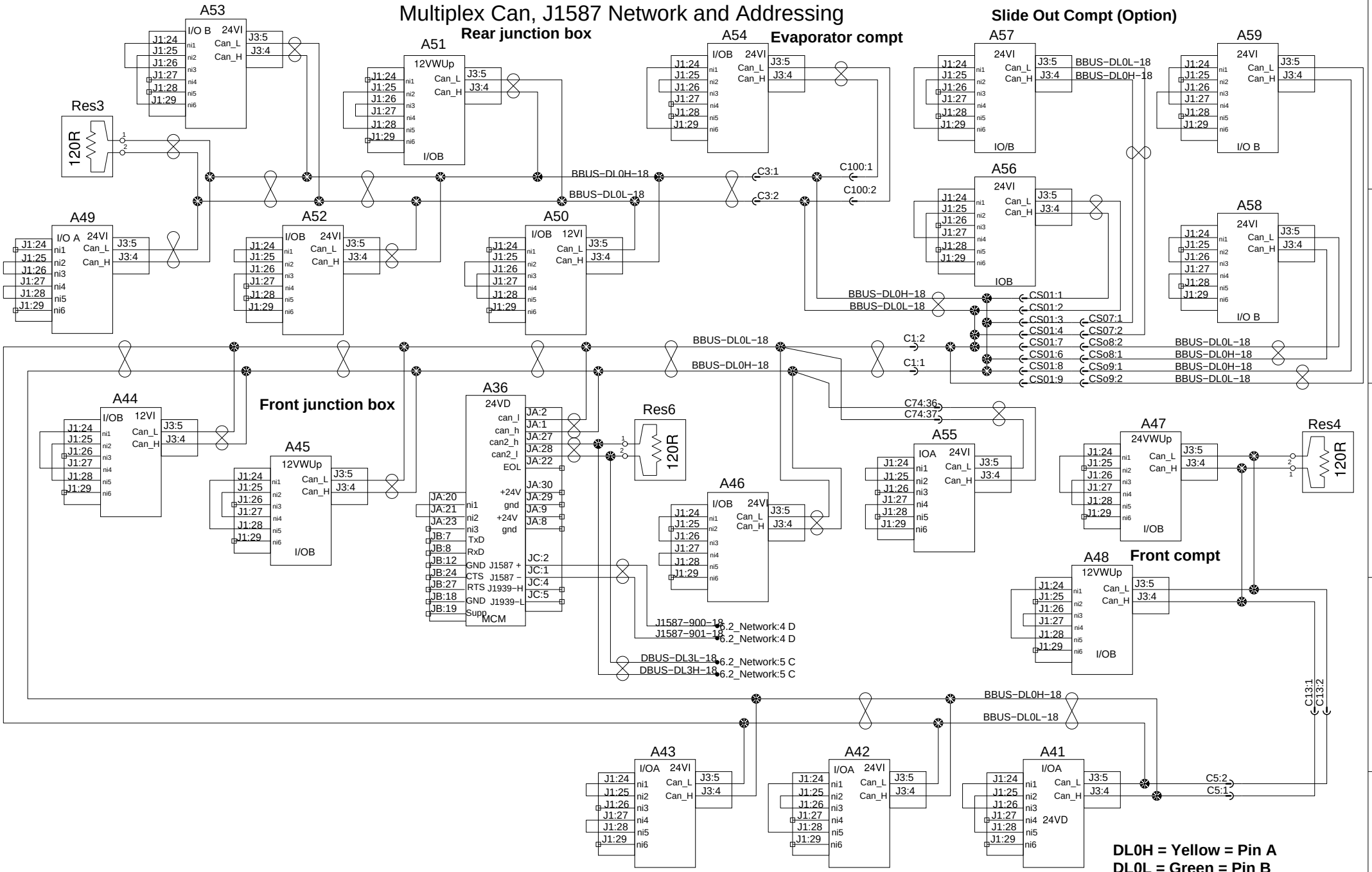

PREVOST®

WIRING DIAGRAM

No:D061160

Page:6.1

Rev:06