Fog's Lights and Backup Lights and Alarm

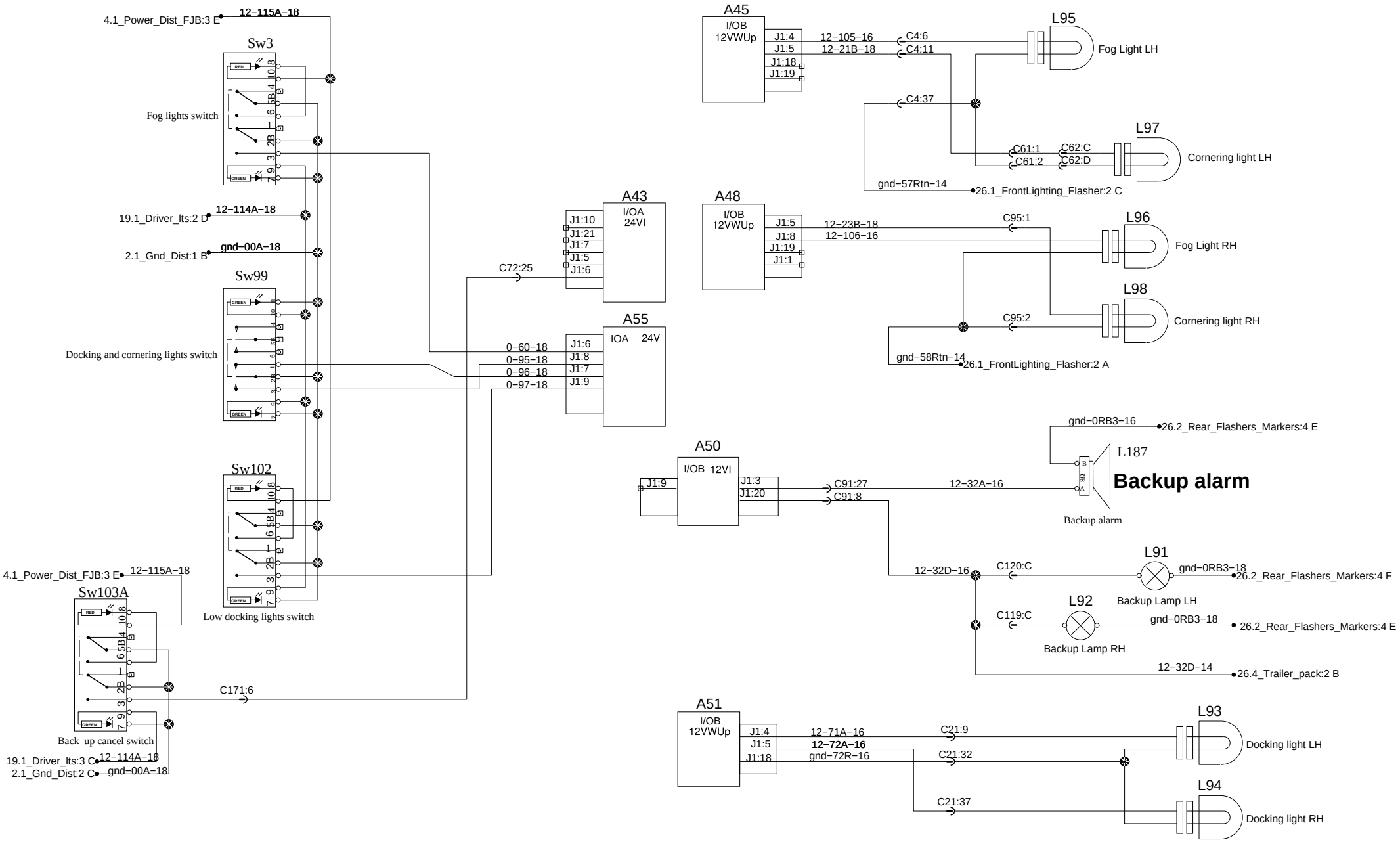

PREVOST®	WIRING DIAGRAM	No:D061170	Page:26.3	Rev:0