Lavatory and No Smoking Sign

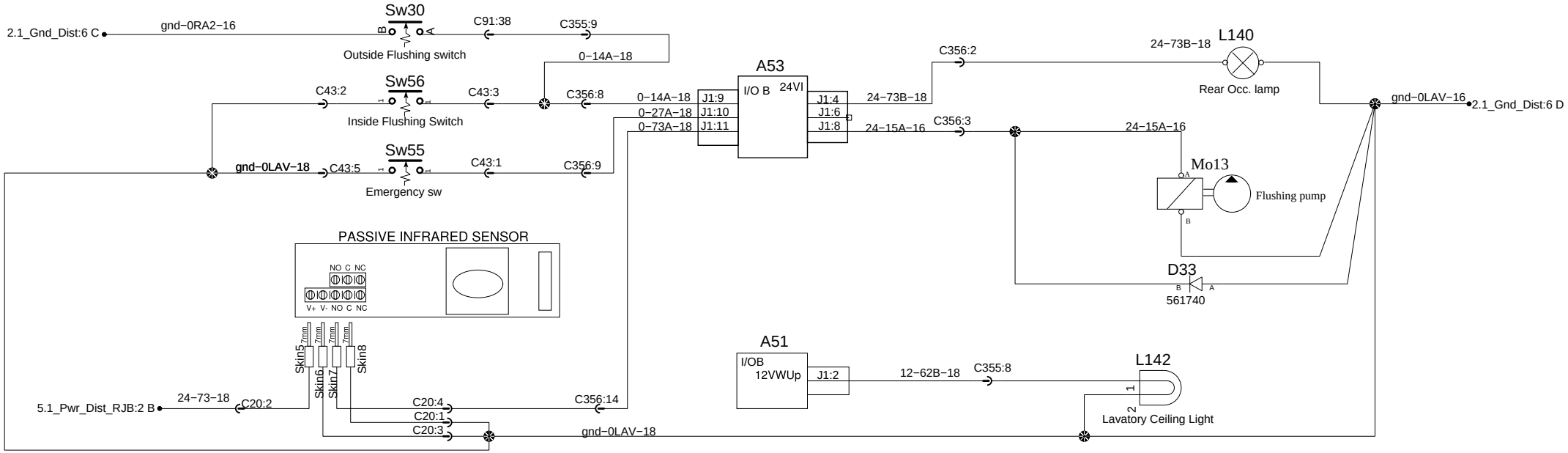

OPTION: ROOF HATCHES WITH VENTILATION

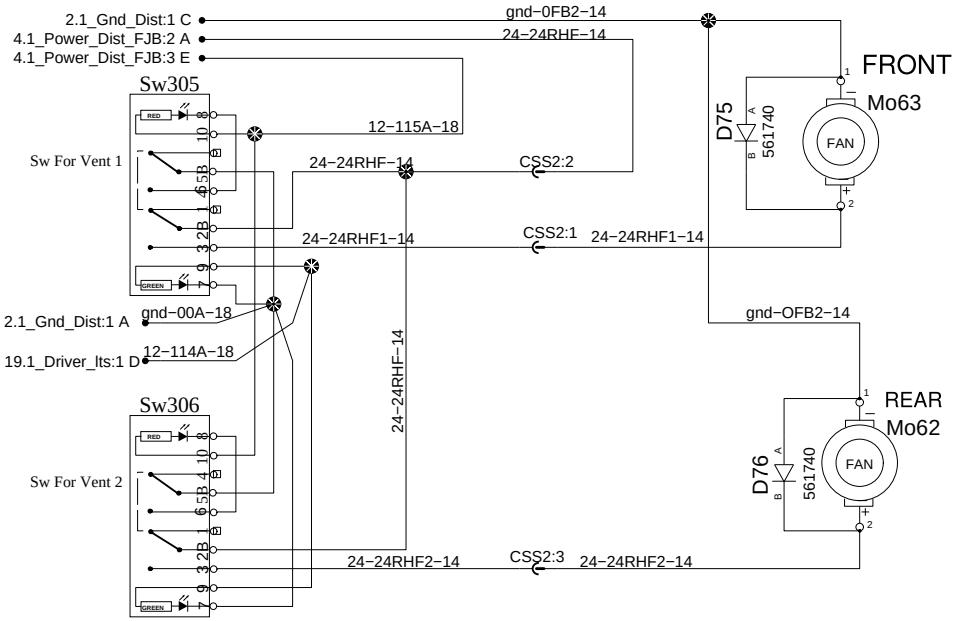

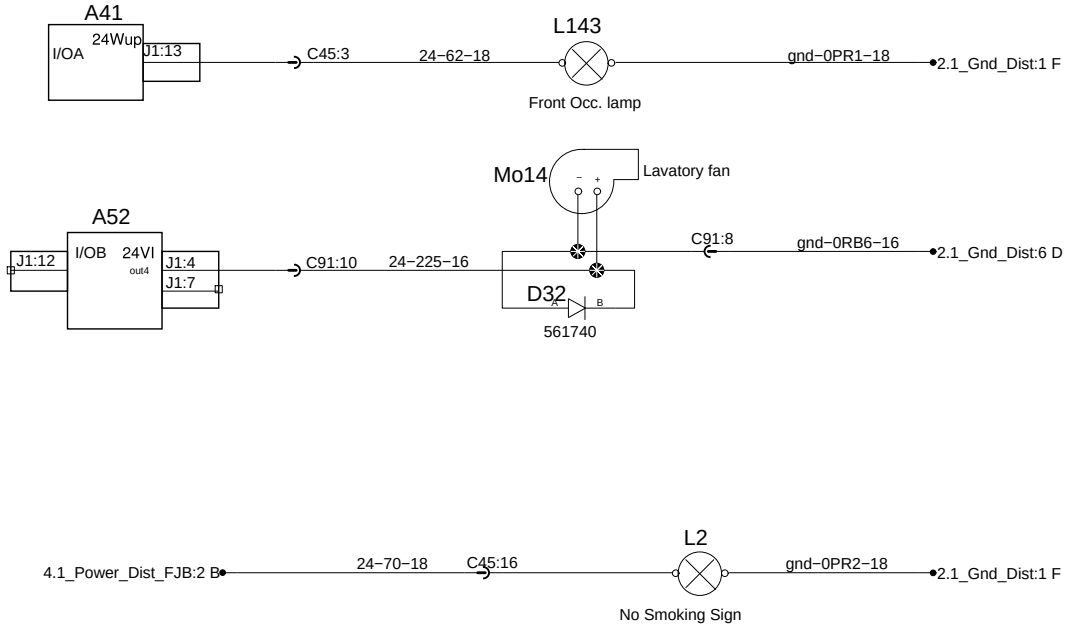

PREVOST®	WIRING DIAGRAM	No:D061340	Page:11.1	Rev:0