VOLVO_D13_Engine_Ecu

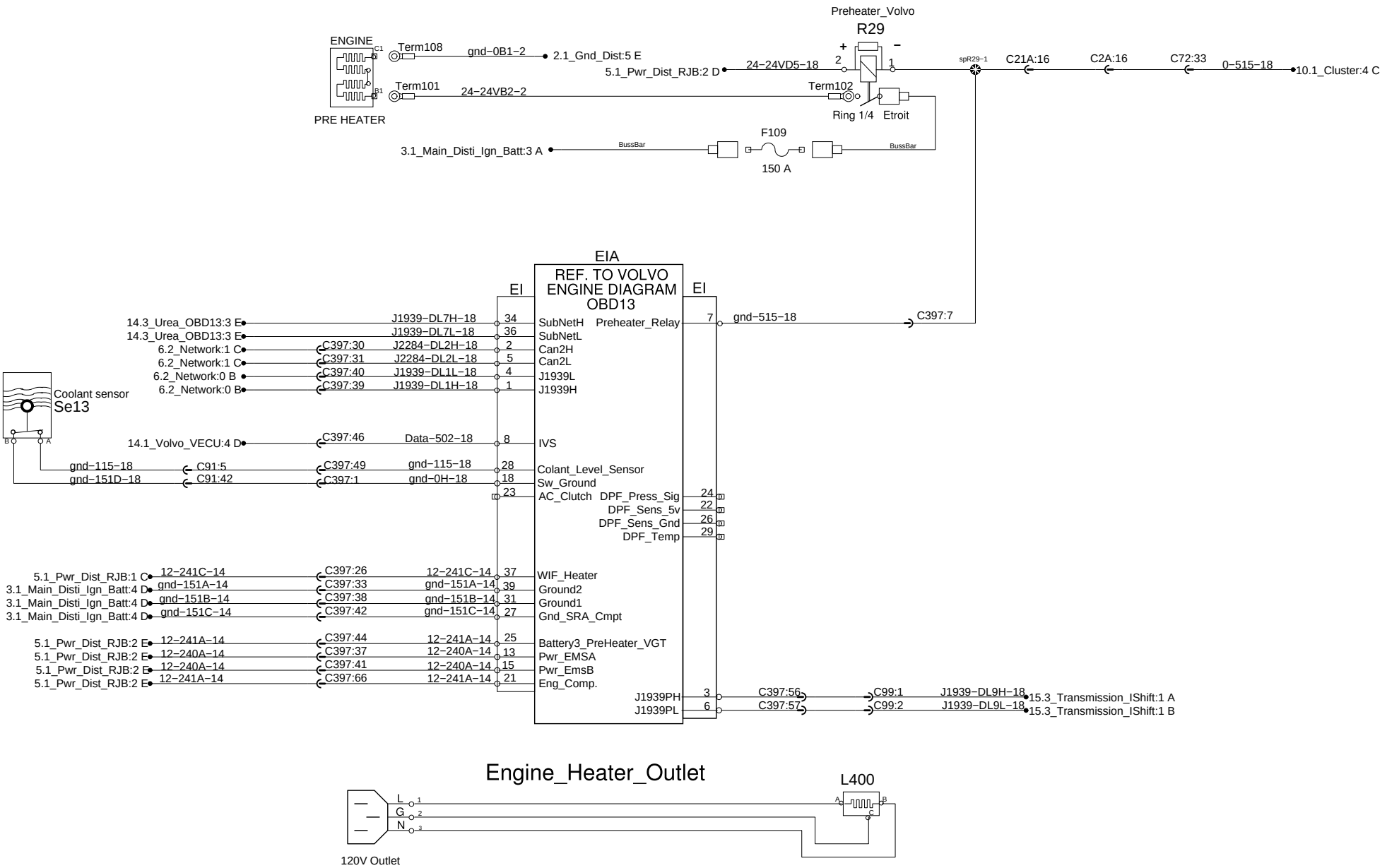

PREVOST®	WIRING DIAGRAM	No:D061340	Page:14.2	Rev:0