ESP

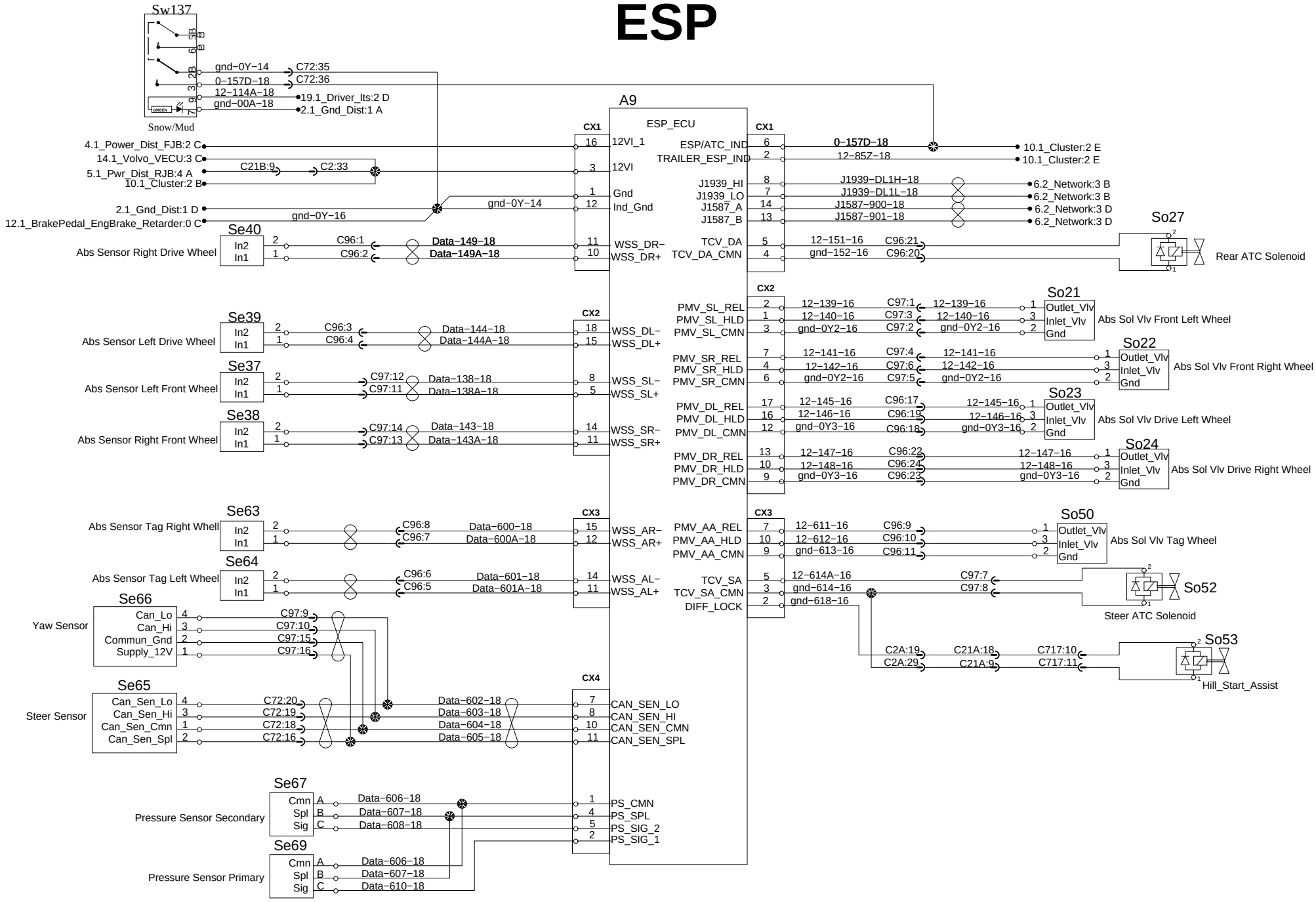

PREVOST®	WIRING DIAGRAM	No:D061340	Page:16.1	Rev:0