PreHeat (Spheros, Pro Heat)

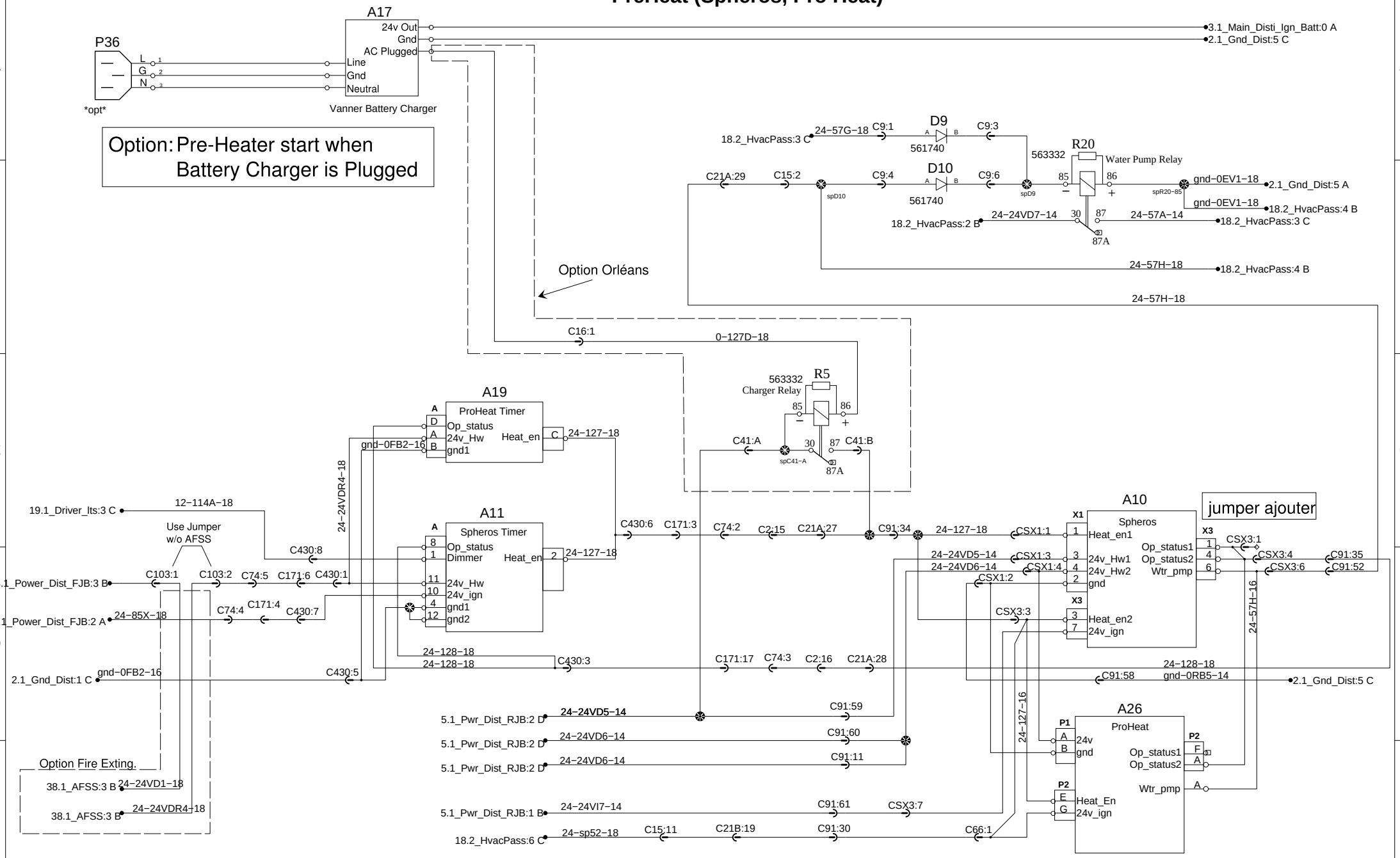

PREVOST®

WIRING DIAGRAM

No:D061340

Page:17.1

Rev:0