MAIN DISTRIBUTION Batteries & Ignition

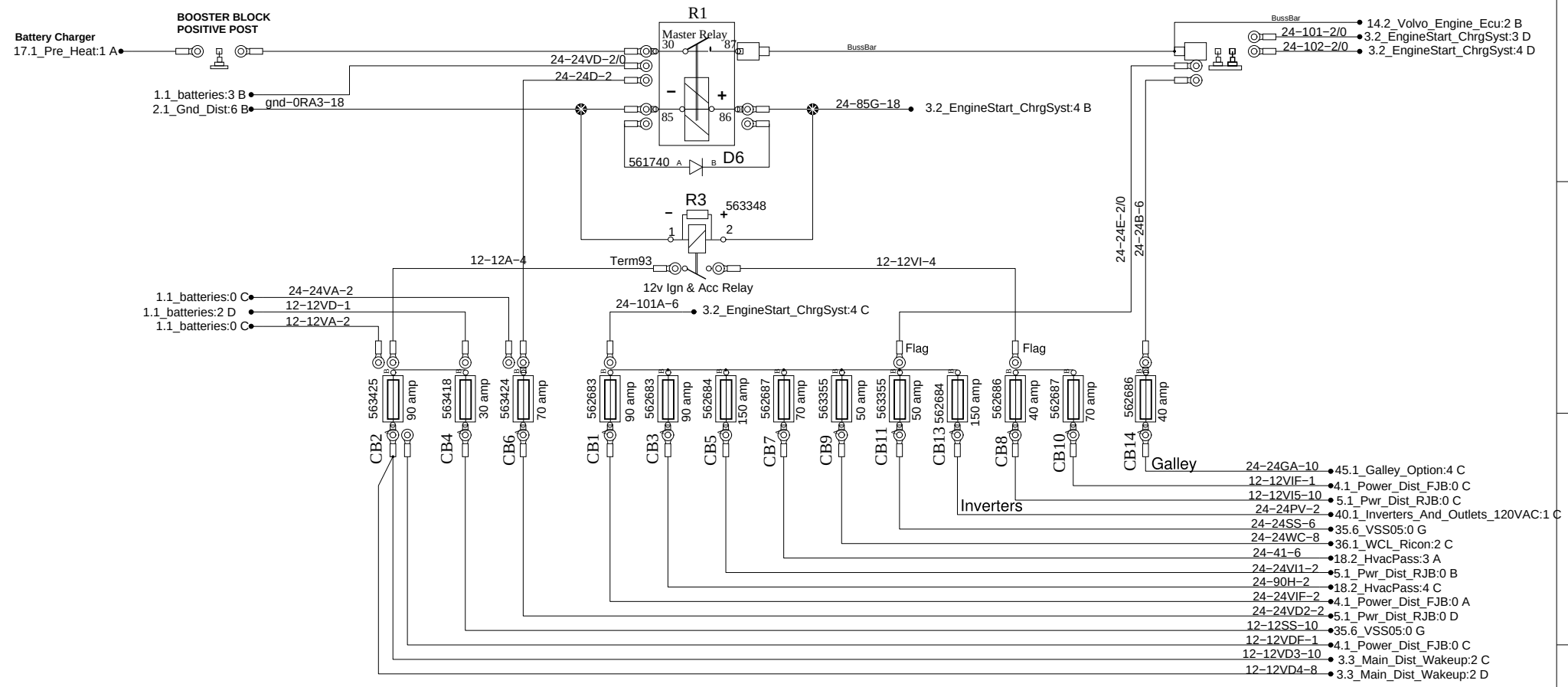

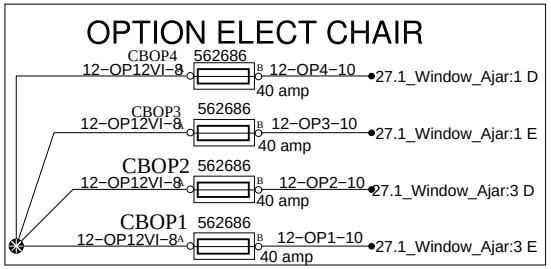

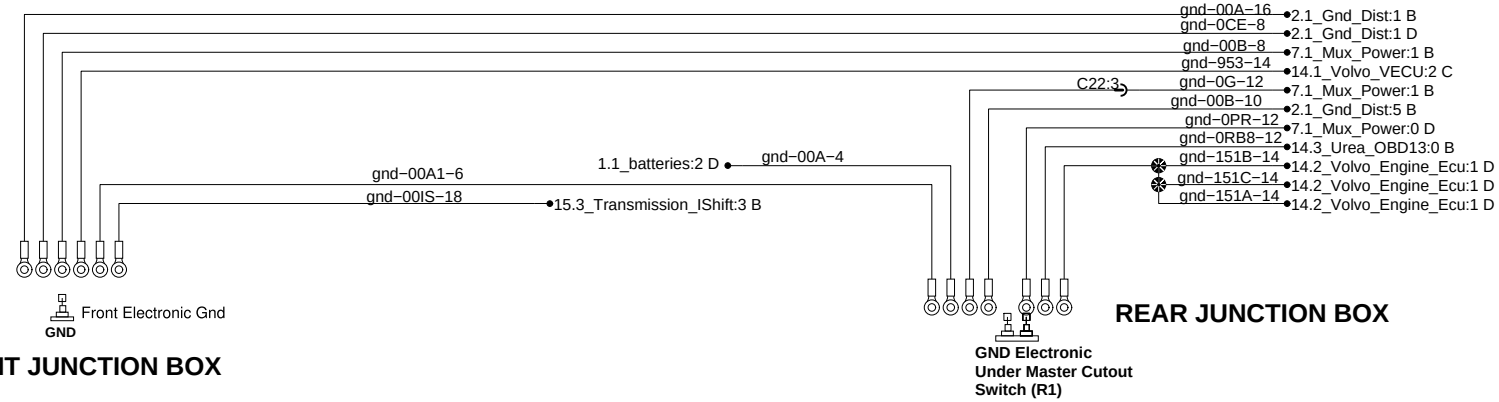

PREVOST®	WIRING DIAGRAM	No:D061340	Page:3.1	Rev:4