# MAIN DISTRIBUTION Wake−Up

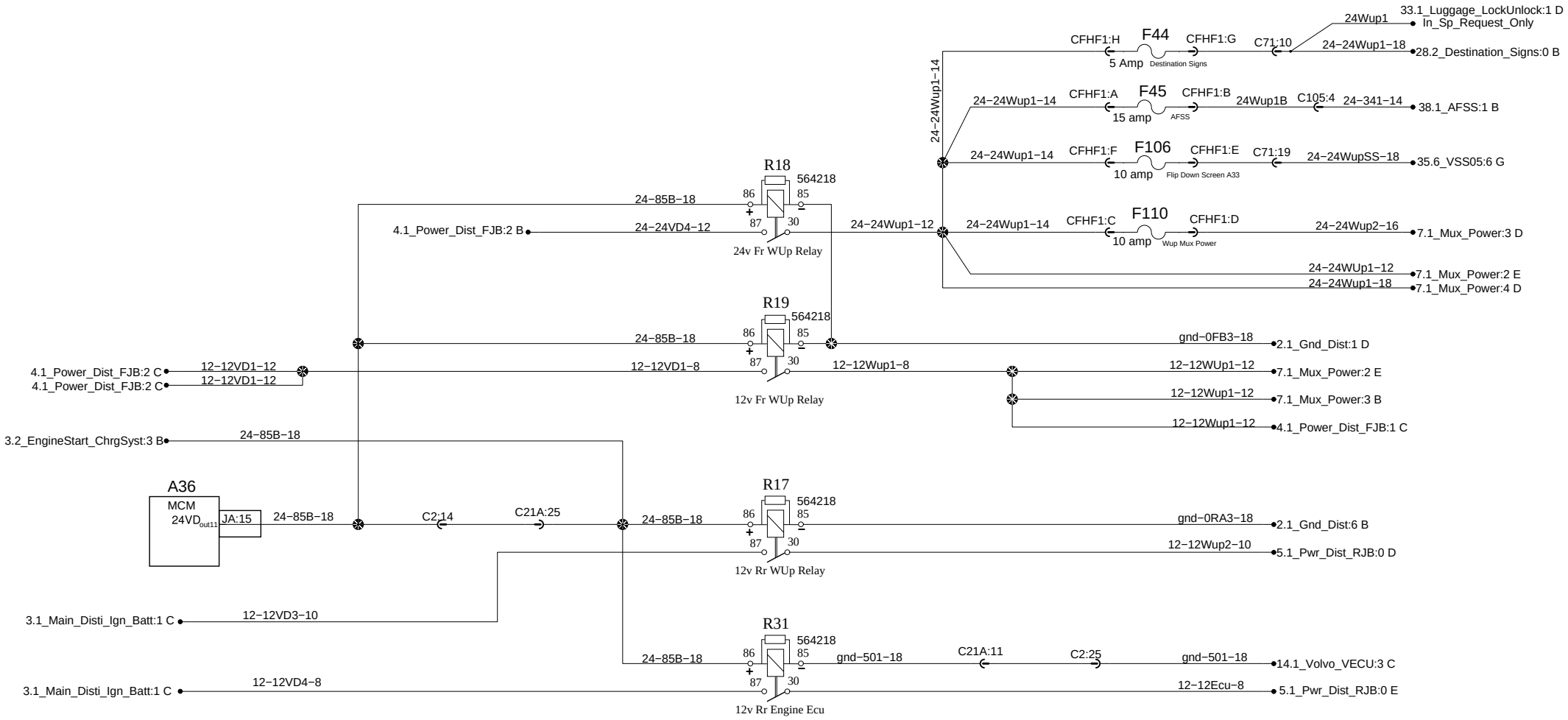


| PREVOST® | WIRING DIAGRAM | No:D061340 | Page:3.3 | Rev:0 |
|---|---|---|---|---|