CTGI - Customer Telematic Gateway Interface (J1939)

CUSTOMER ADAPTATION

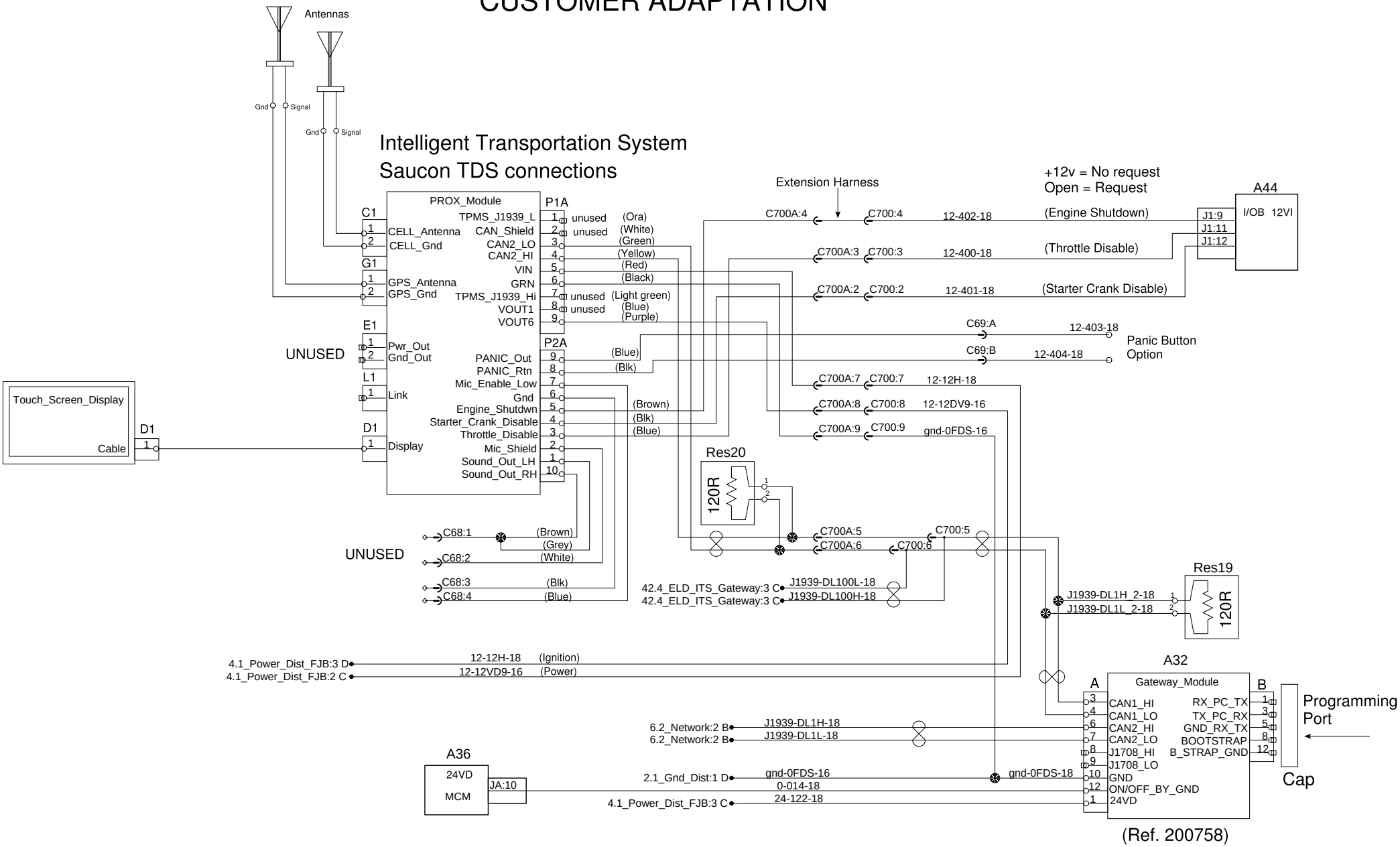

PREVOST®	WIRING DIAGRAM	No:D061340	Page:42.3 SP2	Rev:00