Cluster

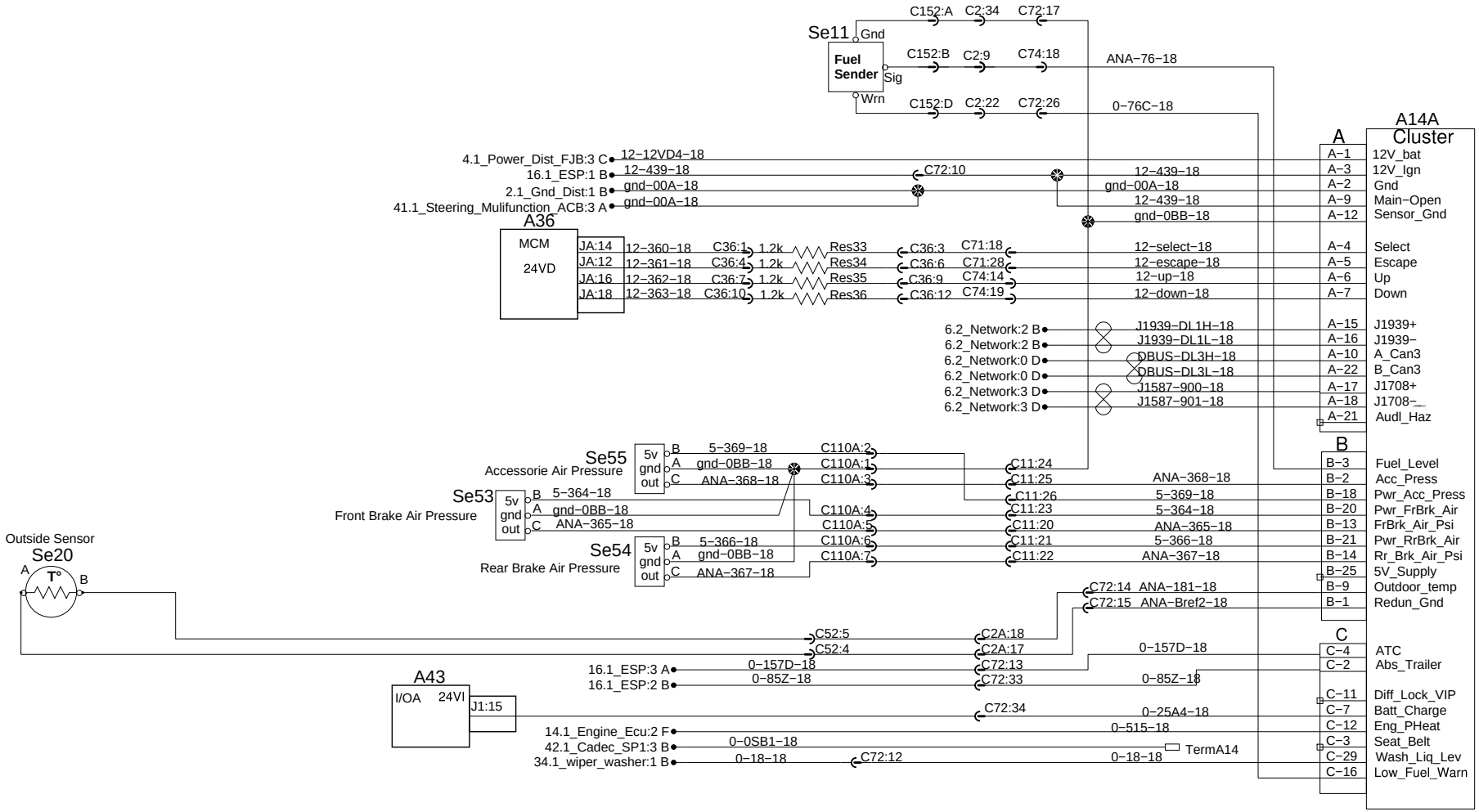

PREVOST®	WIRING DIAGRAM	No:D061350	Page:10.1	Rev:18