Driver lights

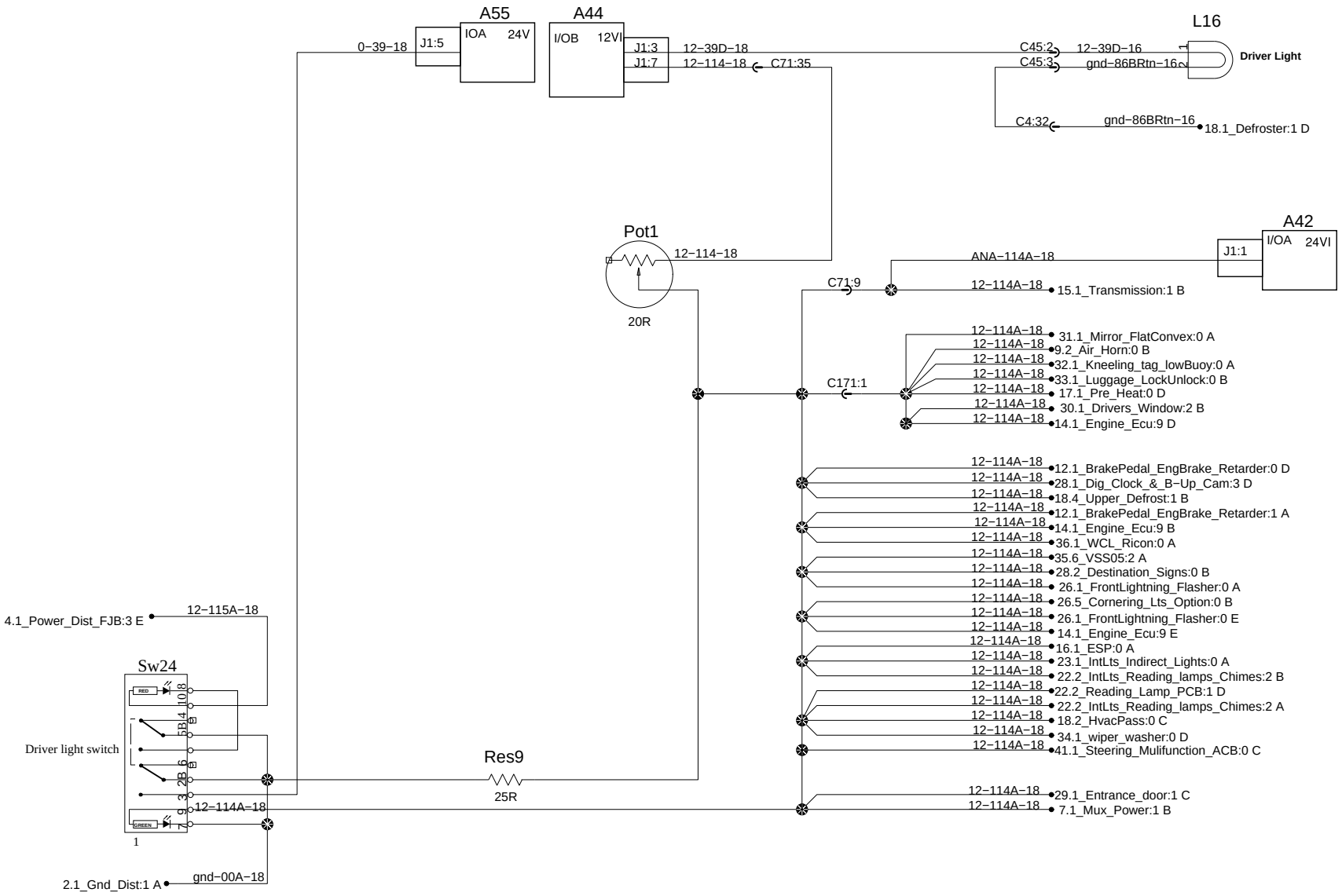

PREVOST®	WIRING DIAGRAM	No:D061350	Page:19.1SP1_11	Rev:0