Emergency & Aisle lights

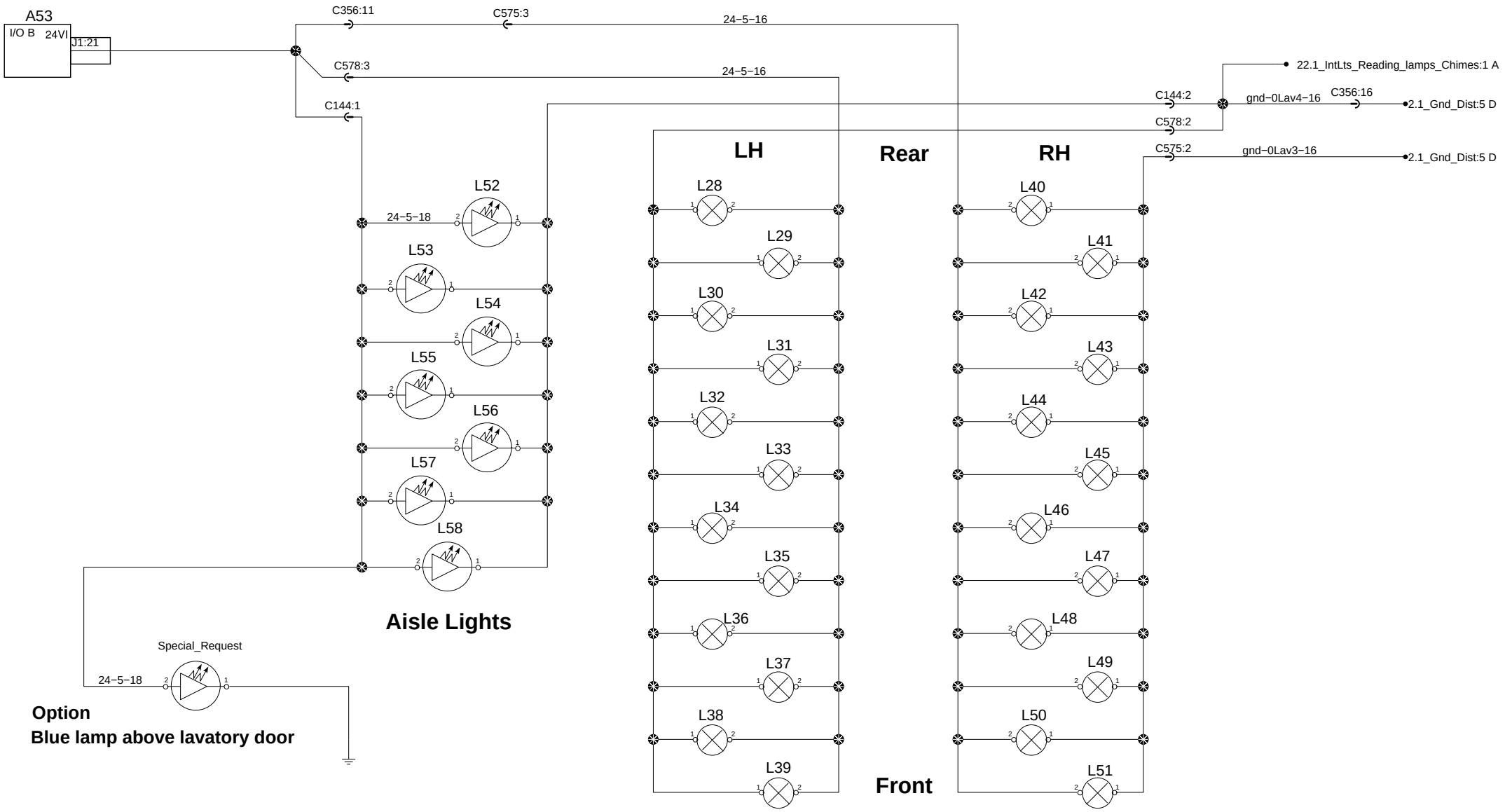

PREVOST®	WIRING DIAGRAM	No:D061350	Page:20.1 SP1	Rev:0