Engine ECU Volvo

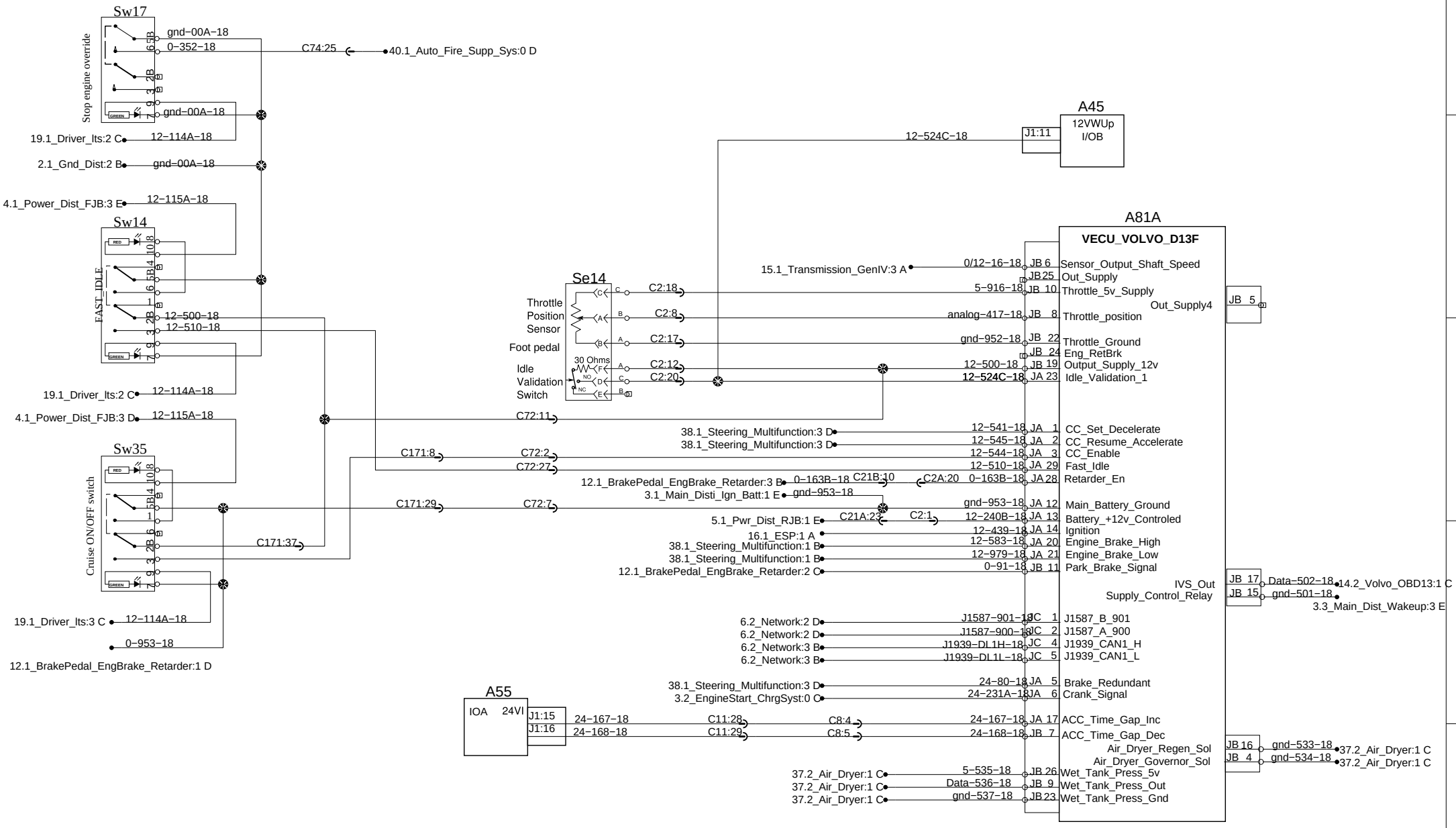

PREVOST®

WIRING DIAGRAM

No:D061360

Page:14.1

Rev:0