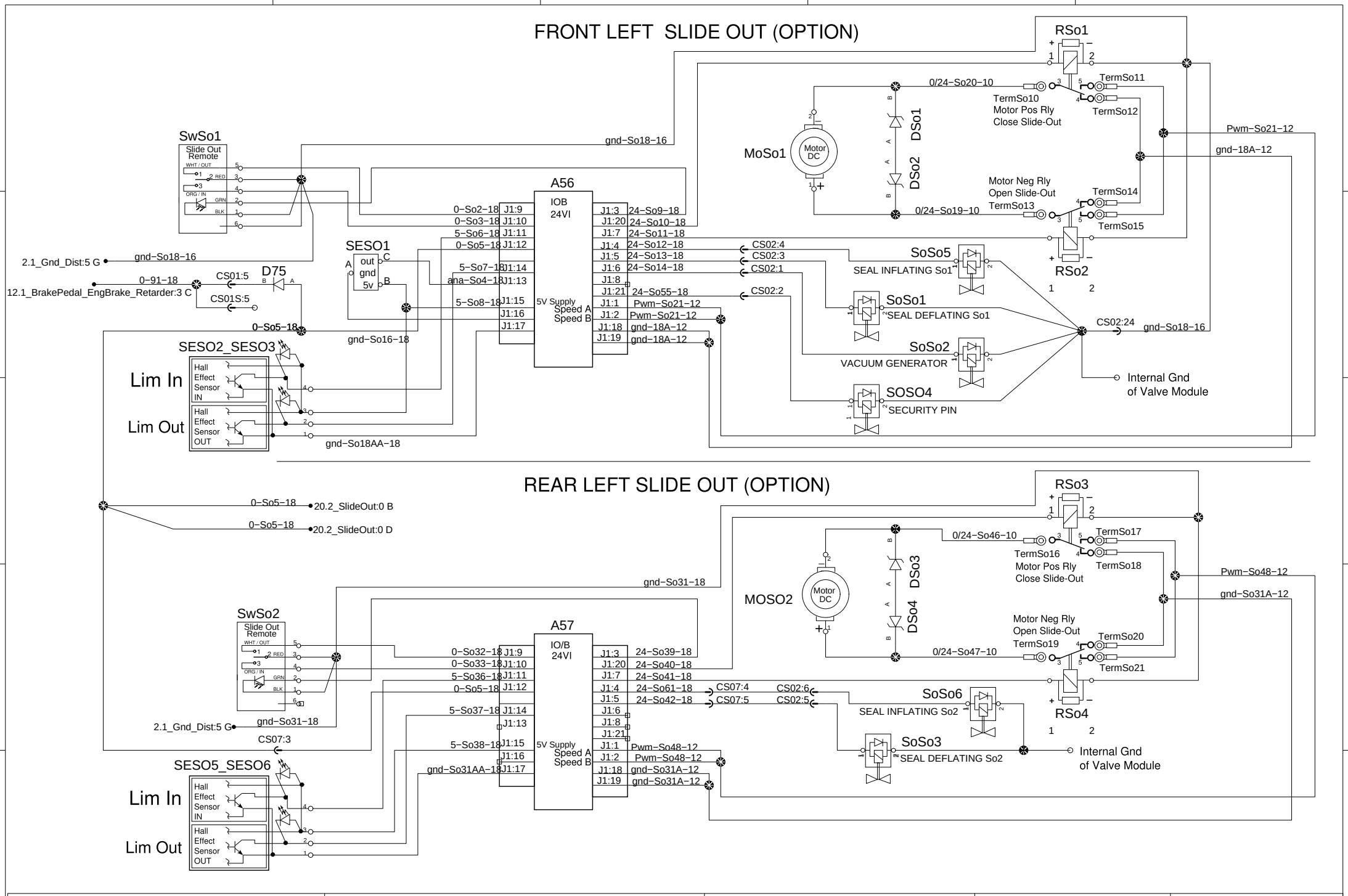


PREVOST®

WIRING DIAGRAM

No:D061360

Page:20.1

Rev:05