REAR LEFT SLIDE OUT OPTION

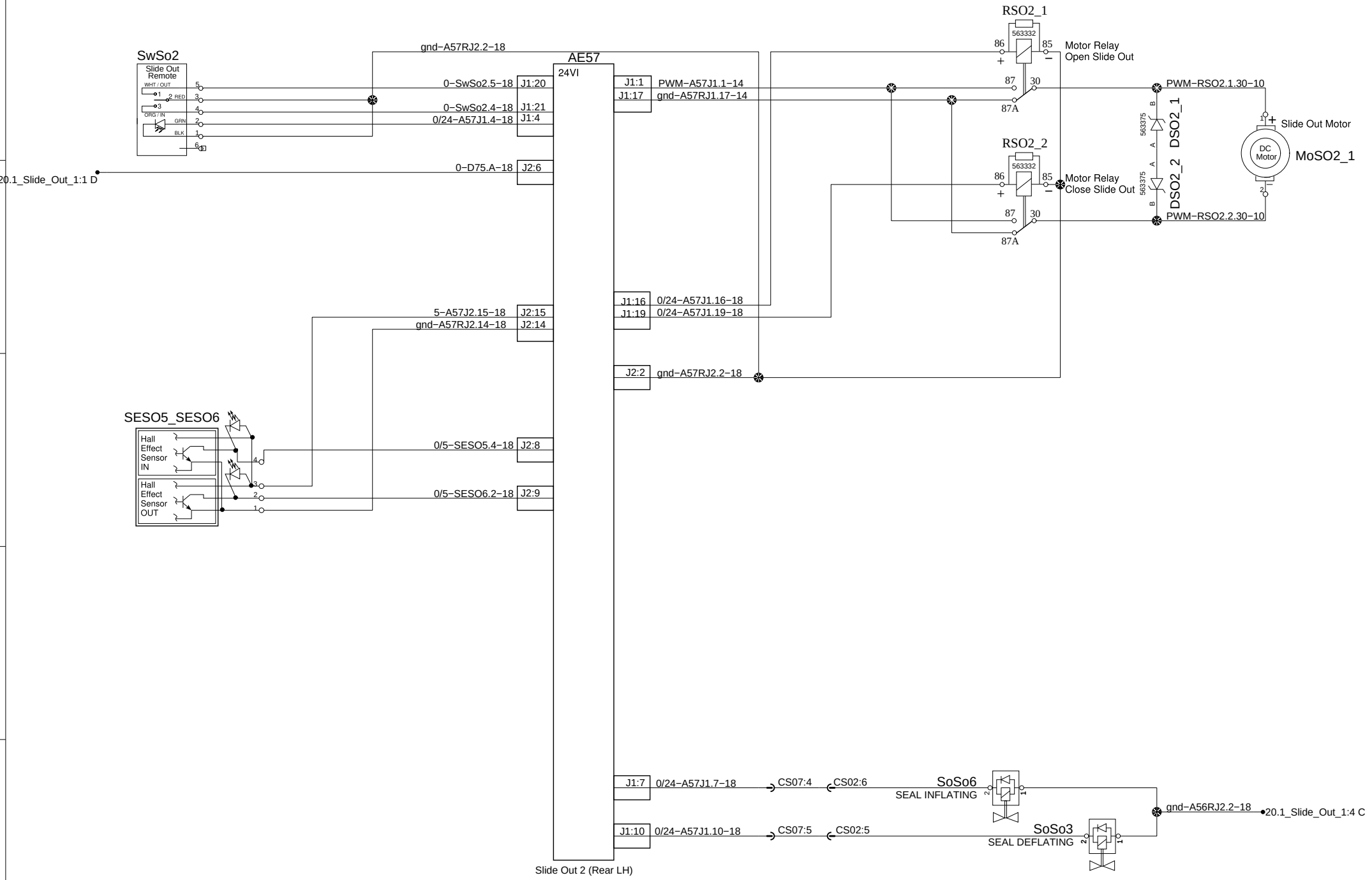

PREVOST®	WIRING DIAGRAM	No:D061360	Page:20.2	Rev:16