Brake, Brake Interlock and Retarder

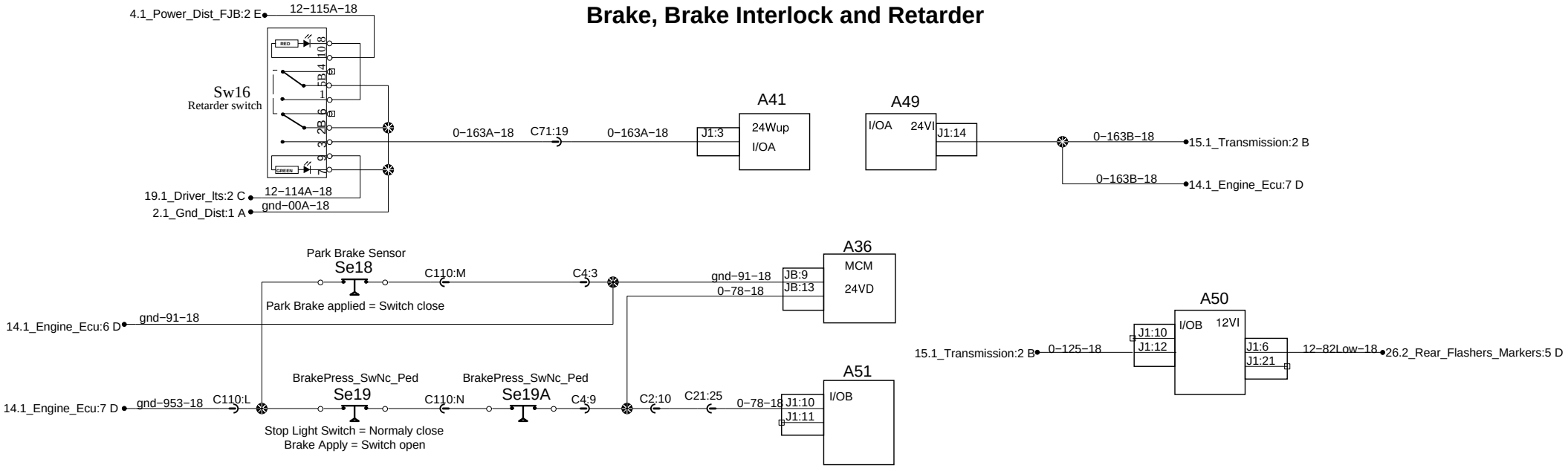

BRAKE INTERLOCK

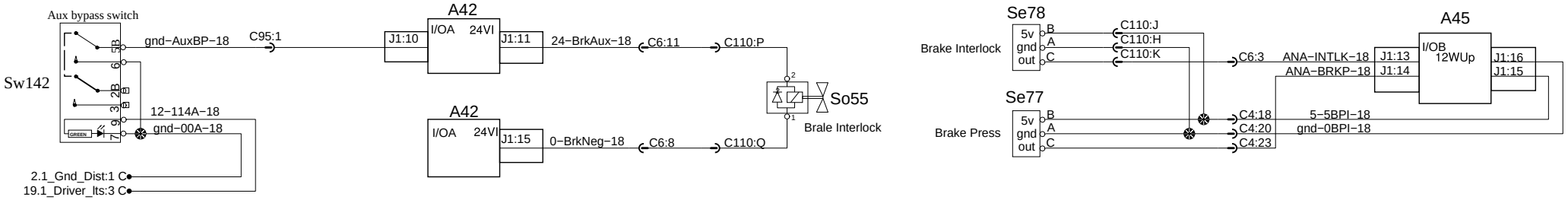

MASTER INTERLOCK BYPASS

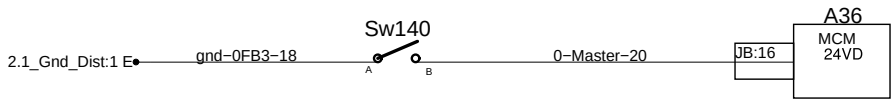
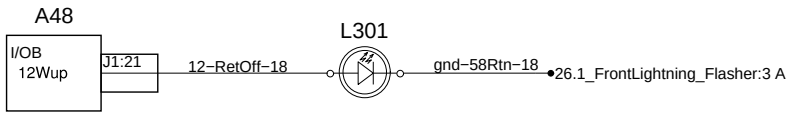
RETARDER OFF LIGHT