Coolant PreHeater Spheros

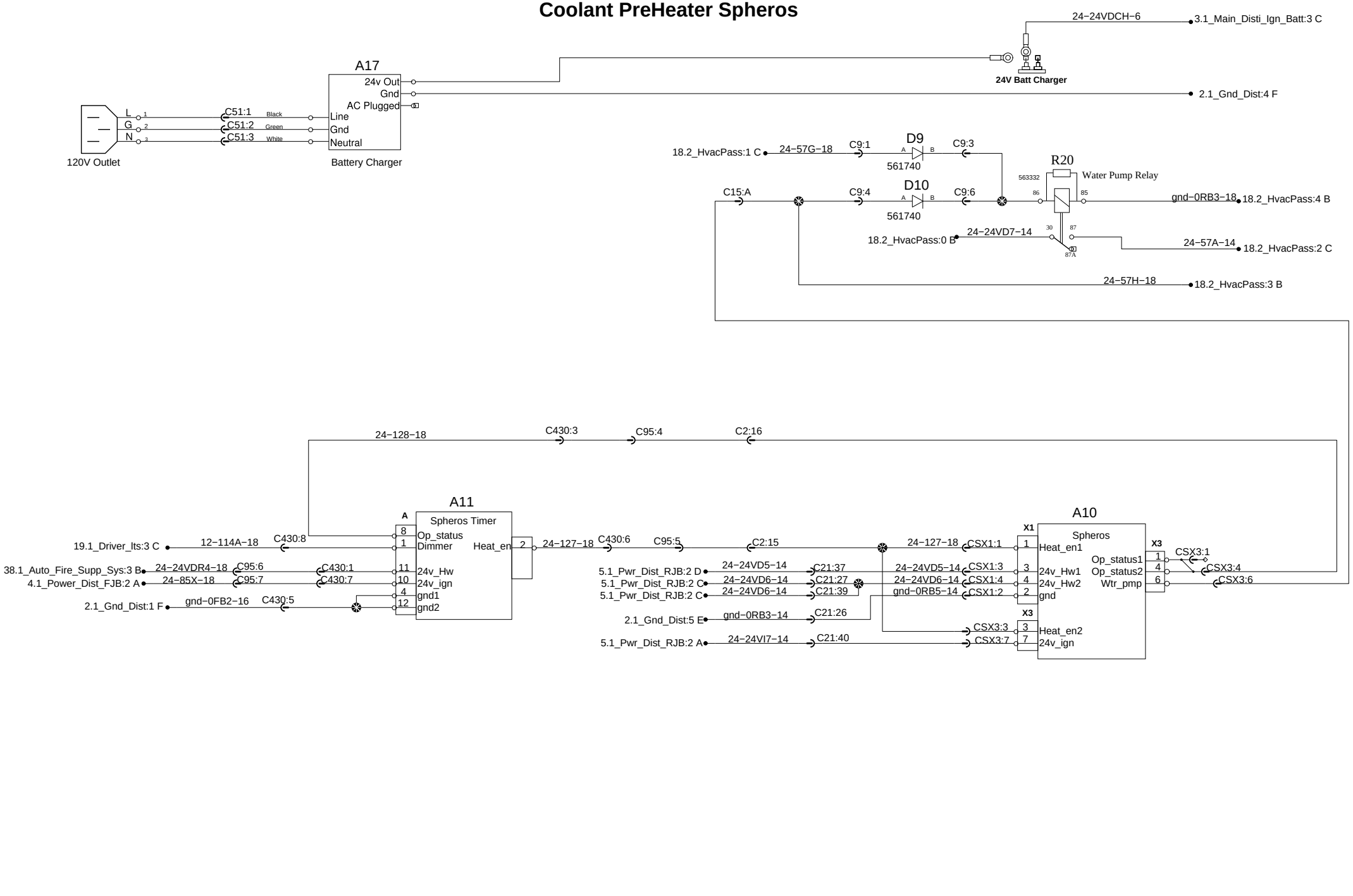

PREVOST®	WIRING DIAGRAM	No:D061380	Page:17.1	Rev:0