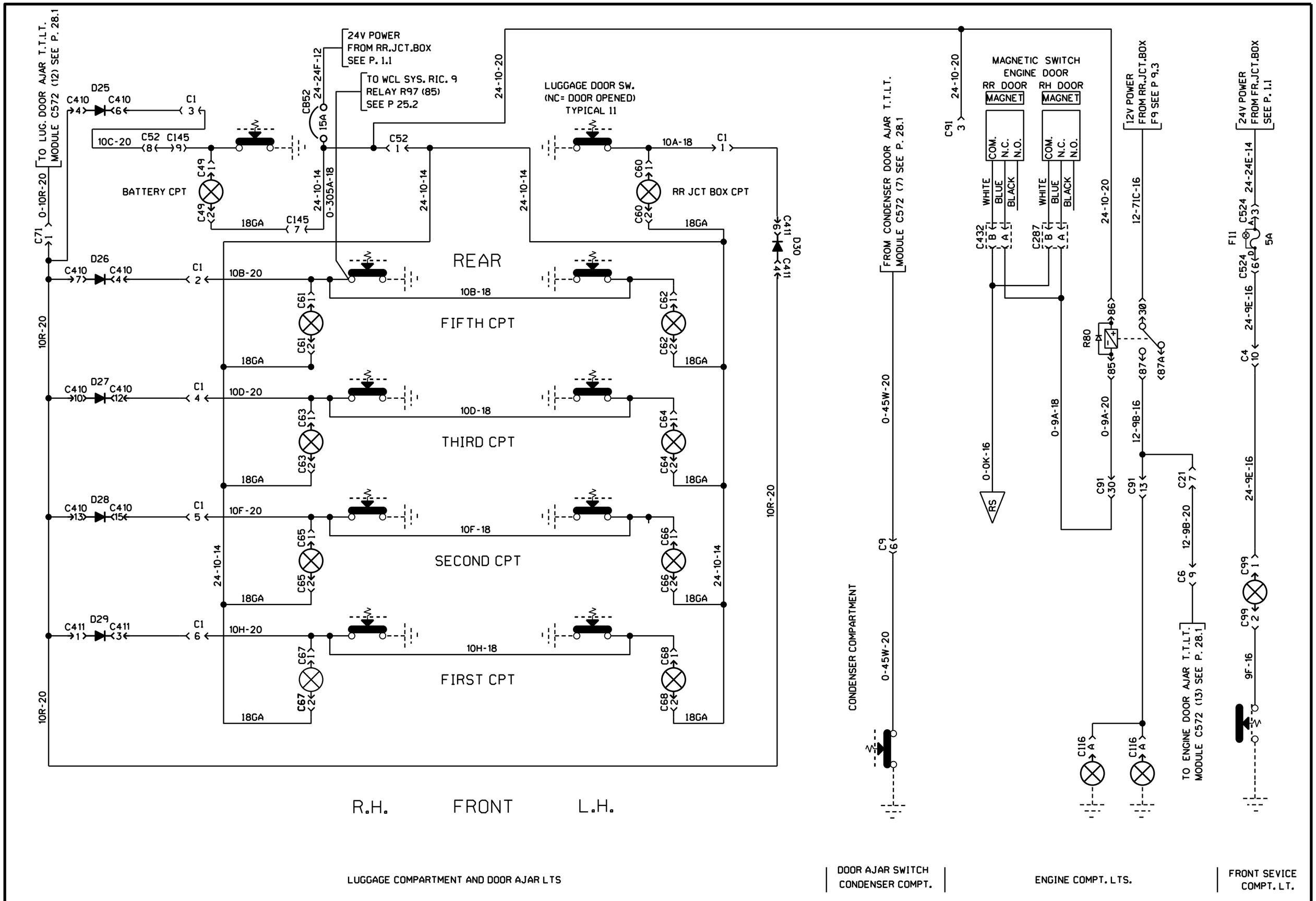


INTERIOR LIGHTING

| PREVOST | WIRING DIAGRAM | NO: D060949 | PAGE: 11.1 | REVISION 11 |
|---|---|---|---|---|