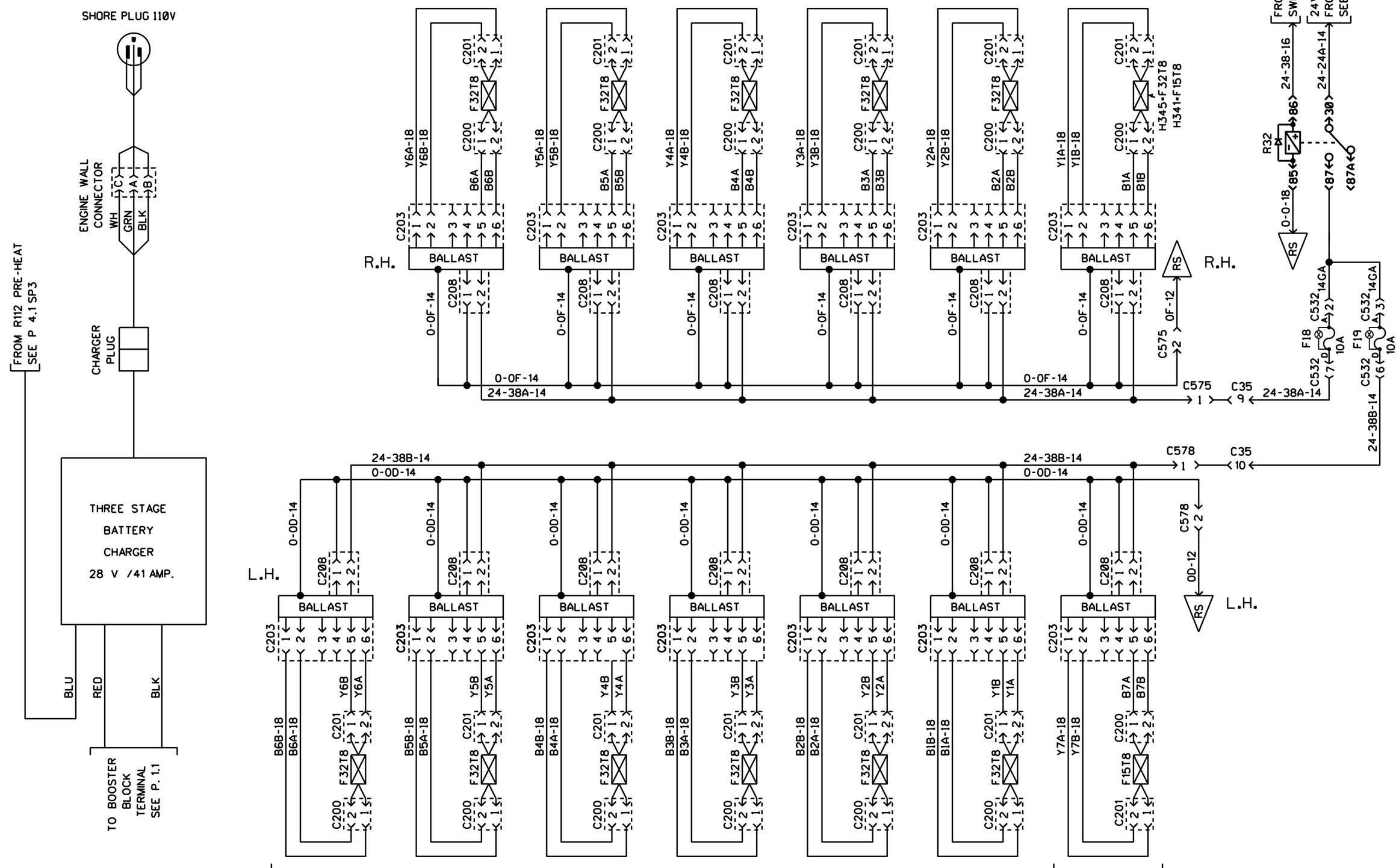

BATTERY CHARGER OR IN-STATION LIGHTING

24V FLUORESCENT INTERIOR LIGHTING

H3-41 & H3-45

H3-45 ONLY

PREVOST	WIRING DIAGRAM	NO: D060949	PAGE: 11.4sp1	REVISION 00