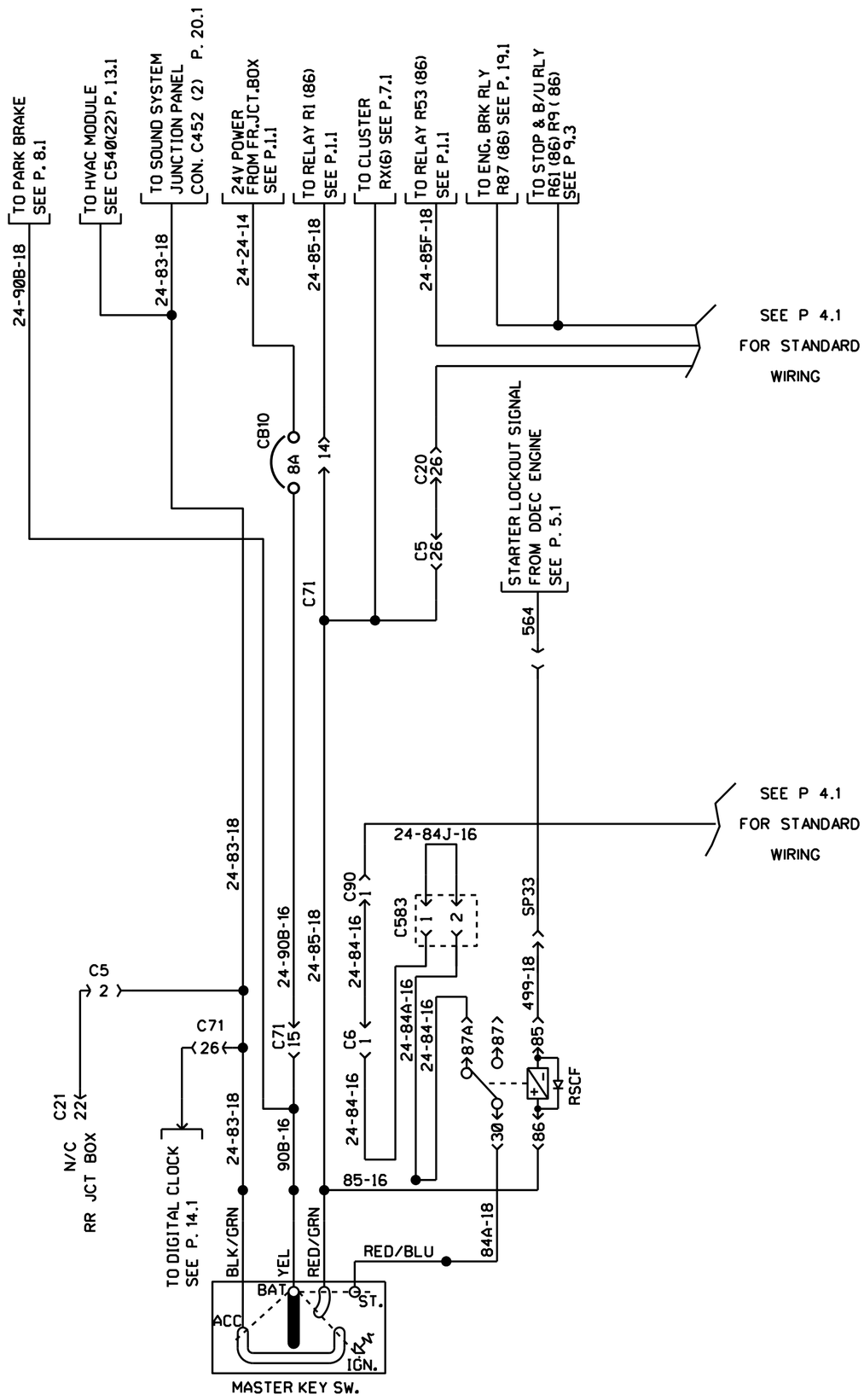

ENGINE CONTROL WITH FORD KEY