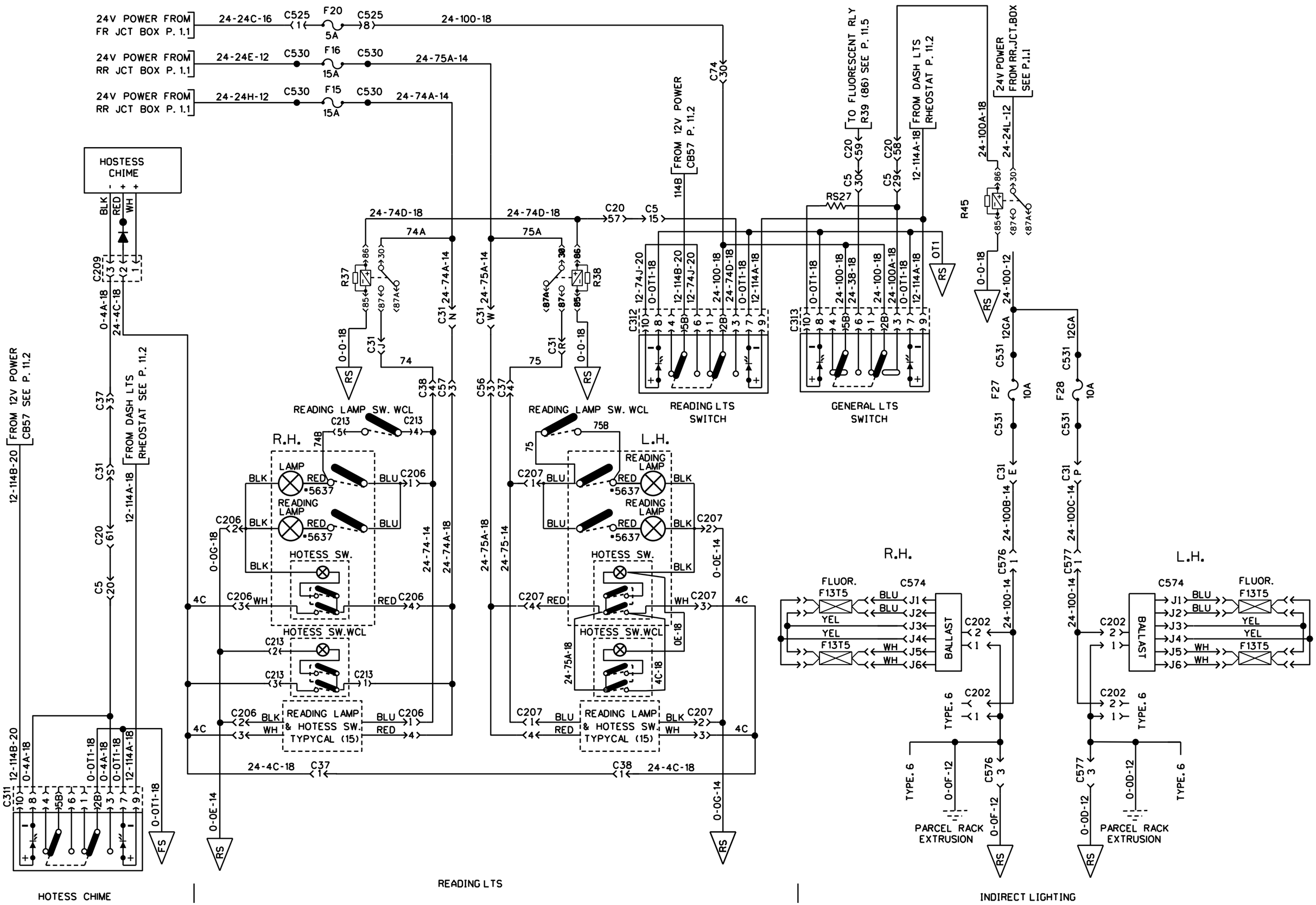

INTERIOR LIGHTING

PREVOST	WIRING DIAGRAM	NO: D060993	PAGE: 11.4	REVISION 15