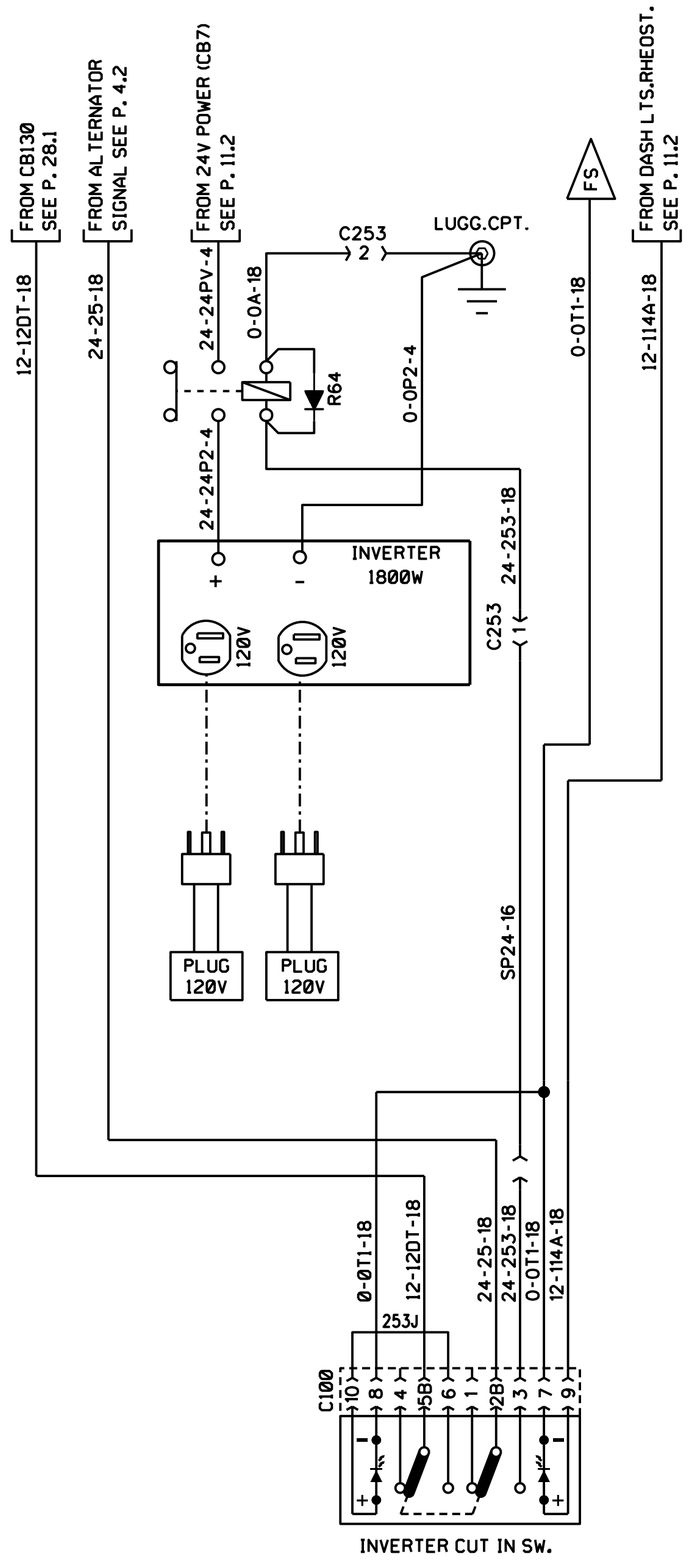

PLUG 120 VOLT

PREVOST	WIRING DIAGRAM	NO: D060993	PAGE: 27.1 sp2	REVISION 00