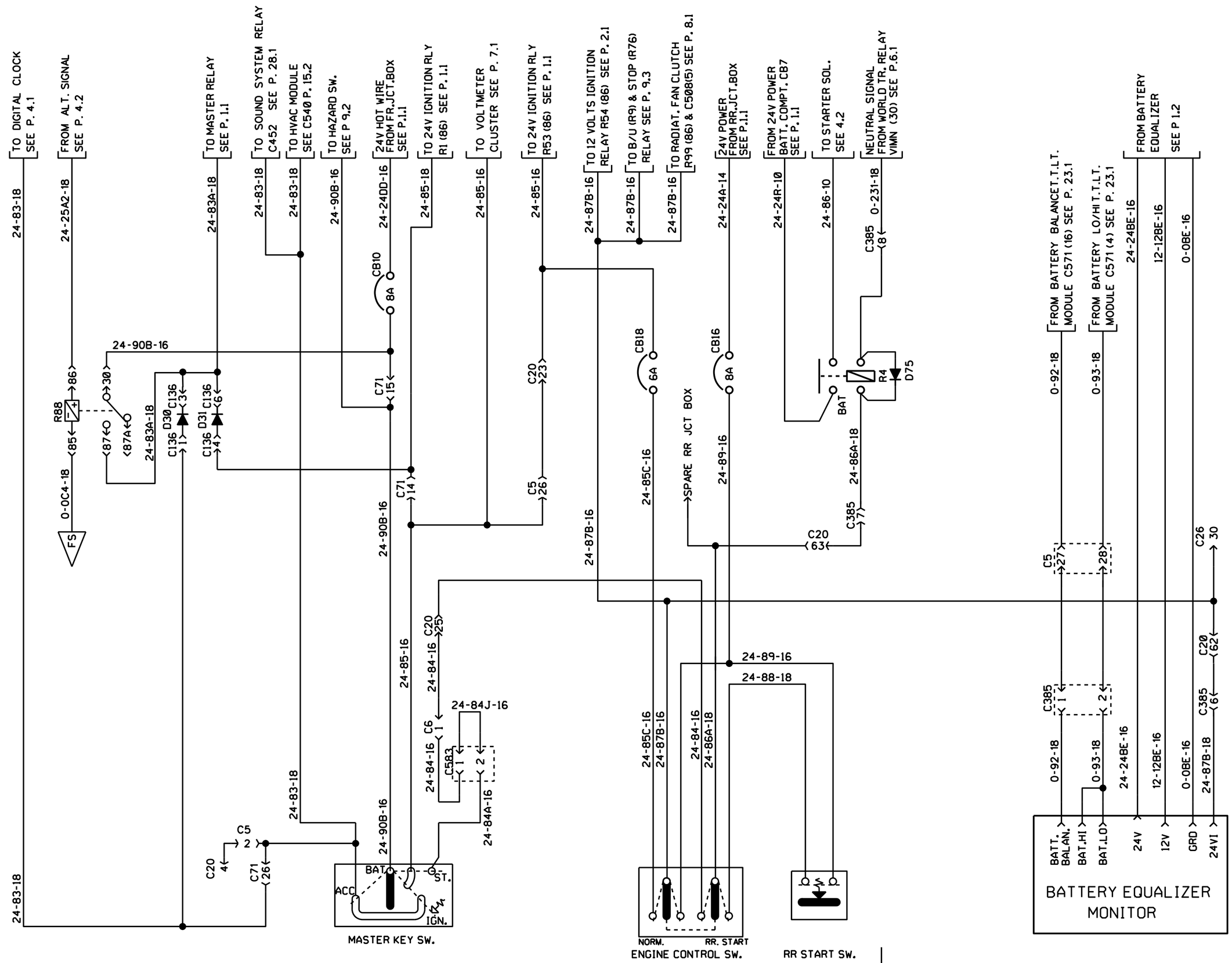

PREVOST	WIRING DIAGRAM	NO: D060993	PAGE: 4.1	REVISION 00