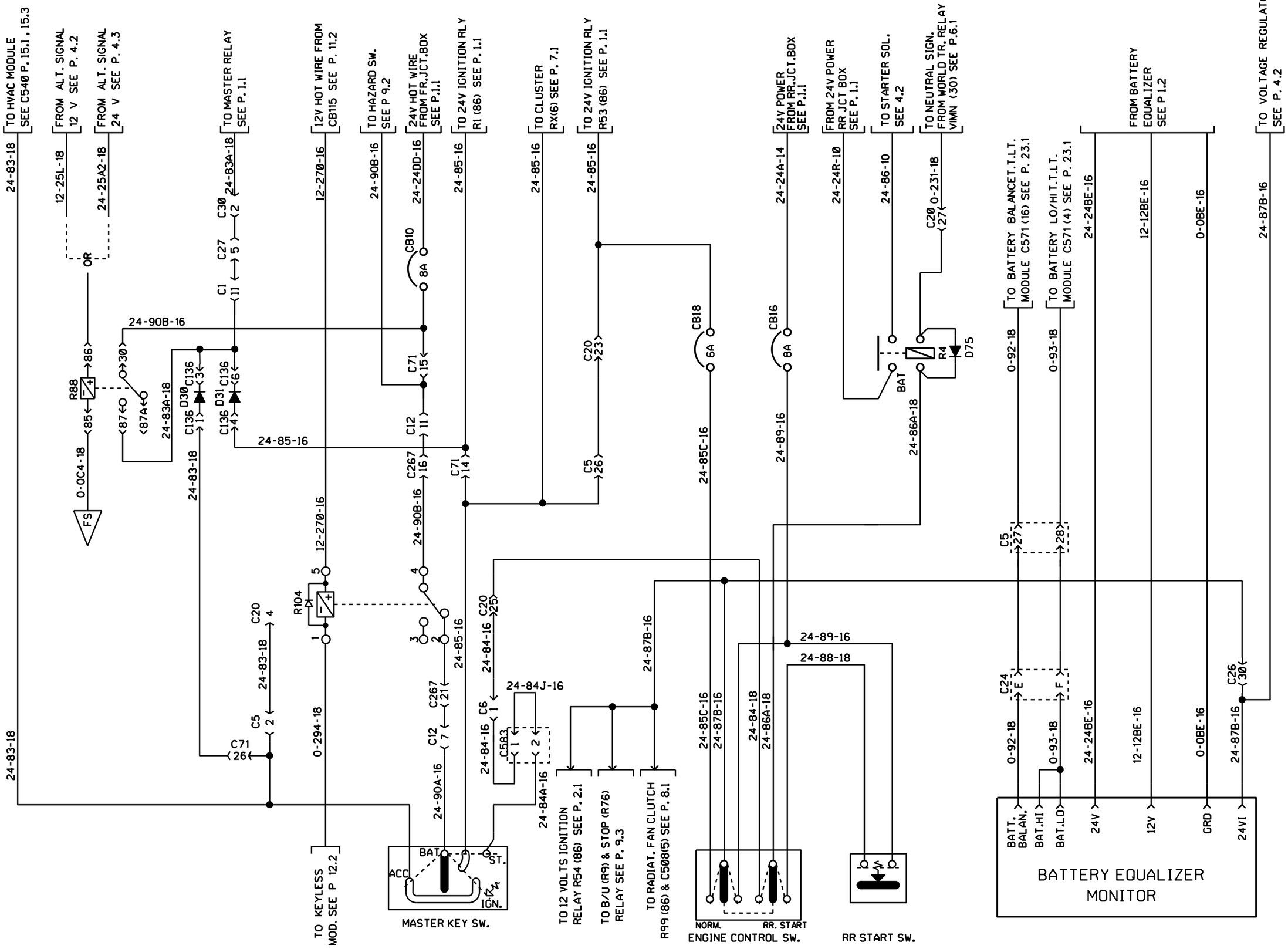

ENGINE CONTROL