VECU VEHICLE ECU WIRING DIAGRAM BA

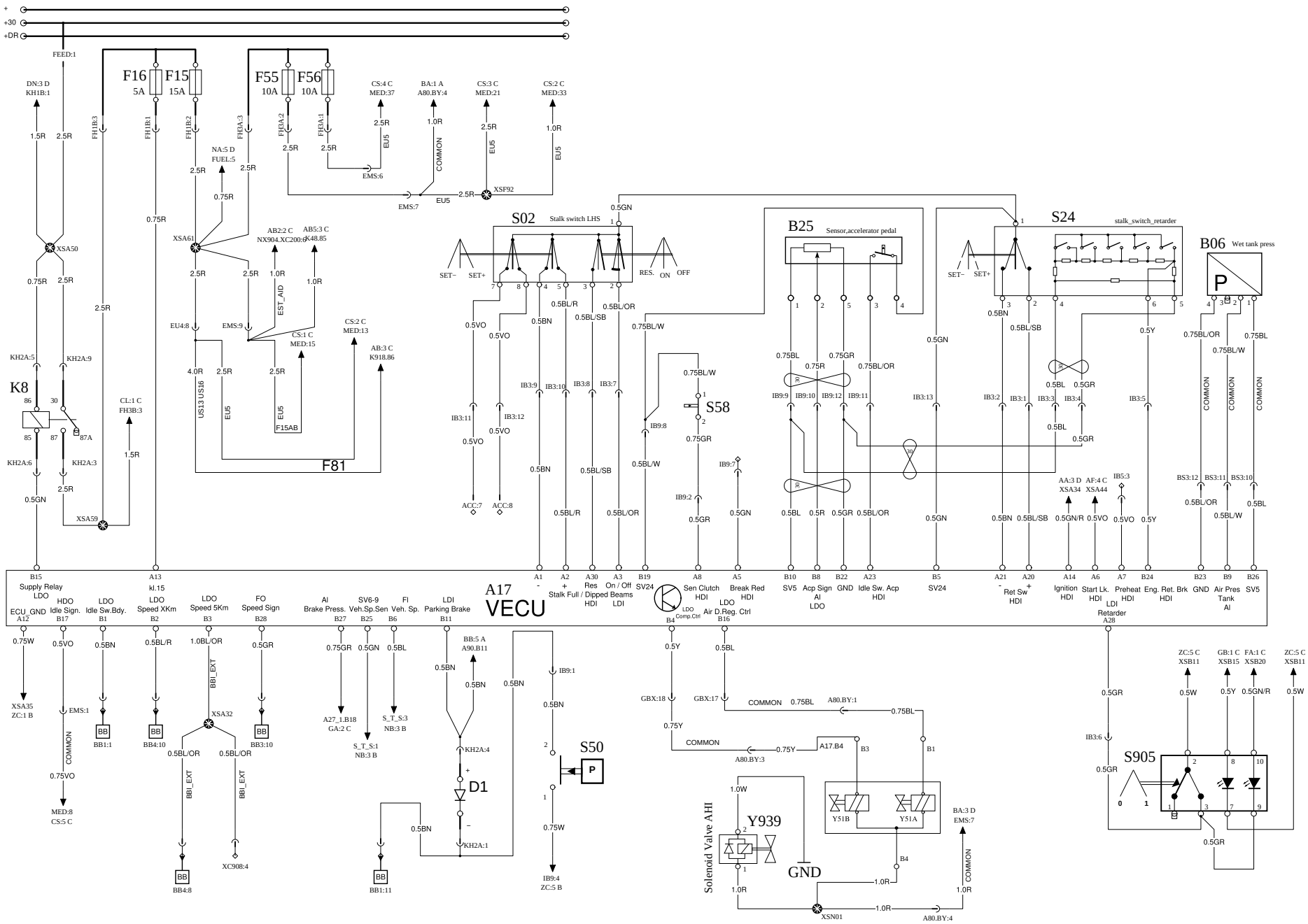

VOLVO Volvo Bus Corporation	Document title WIRING DIAGRAM - B13R	Document No	Issue	Volume	Page
	Document type PRODUCT SCHEMATIC	22610880	01	1 (2)	12 (48)