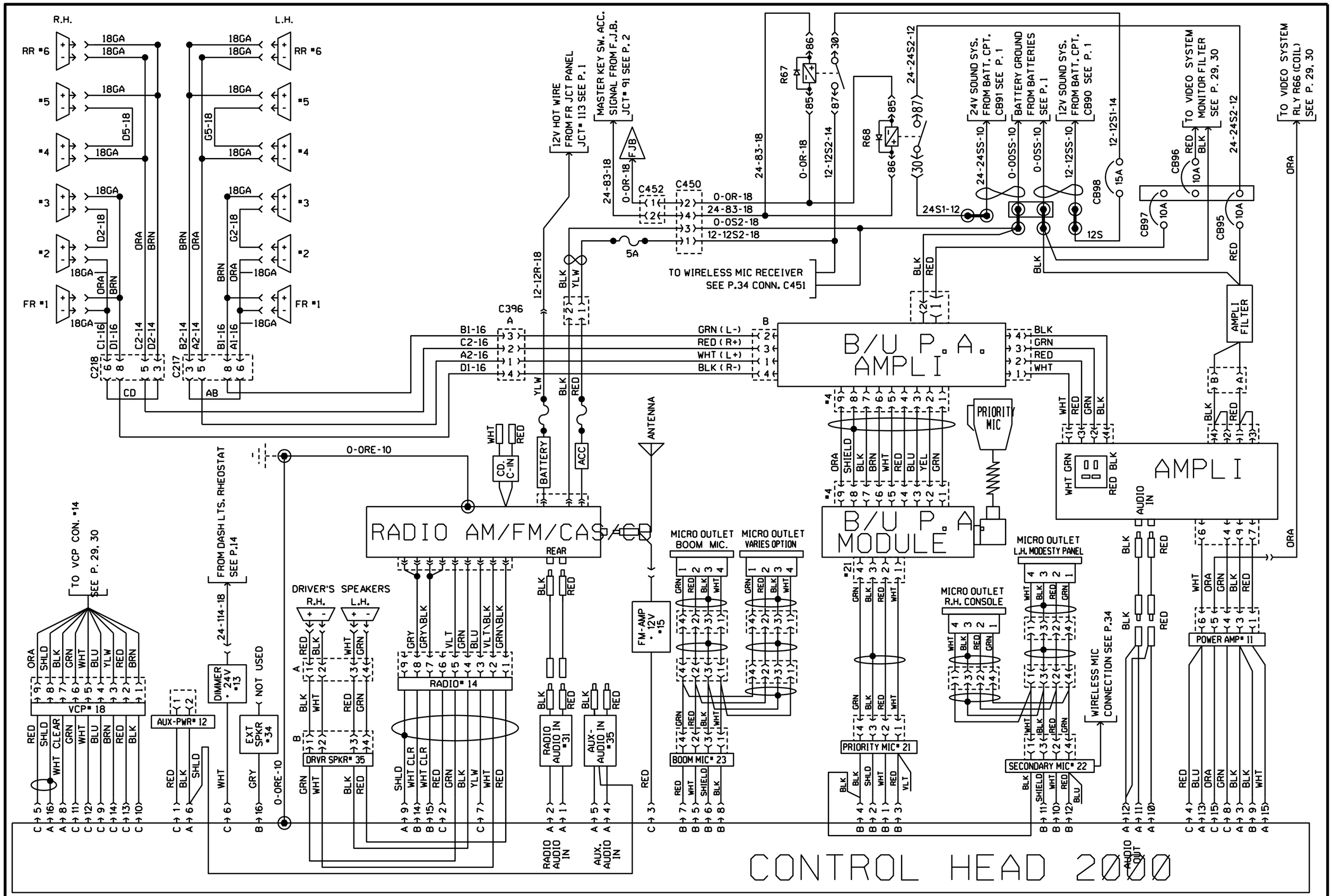

SOUND SYSTEM

PREVOST CAR inc.	WIRING DIAGRAM	NO: D060872	P. 28	REVISION 019