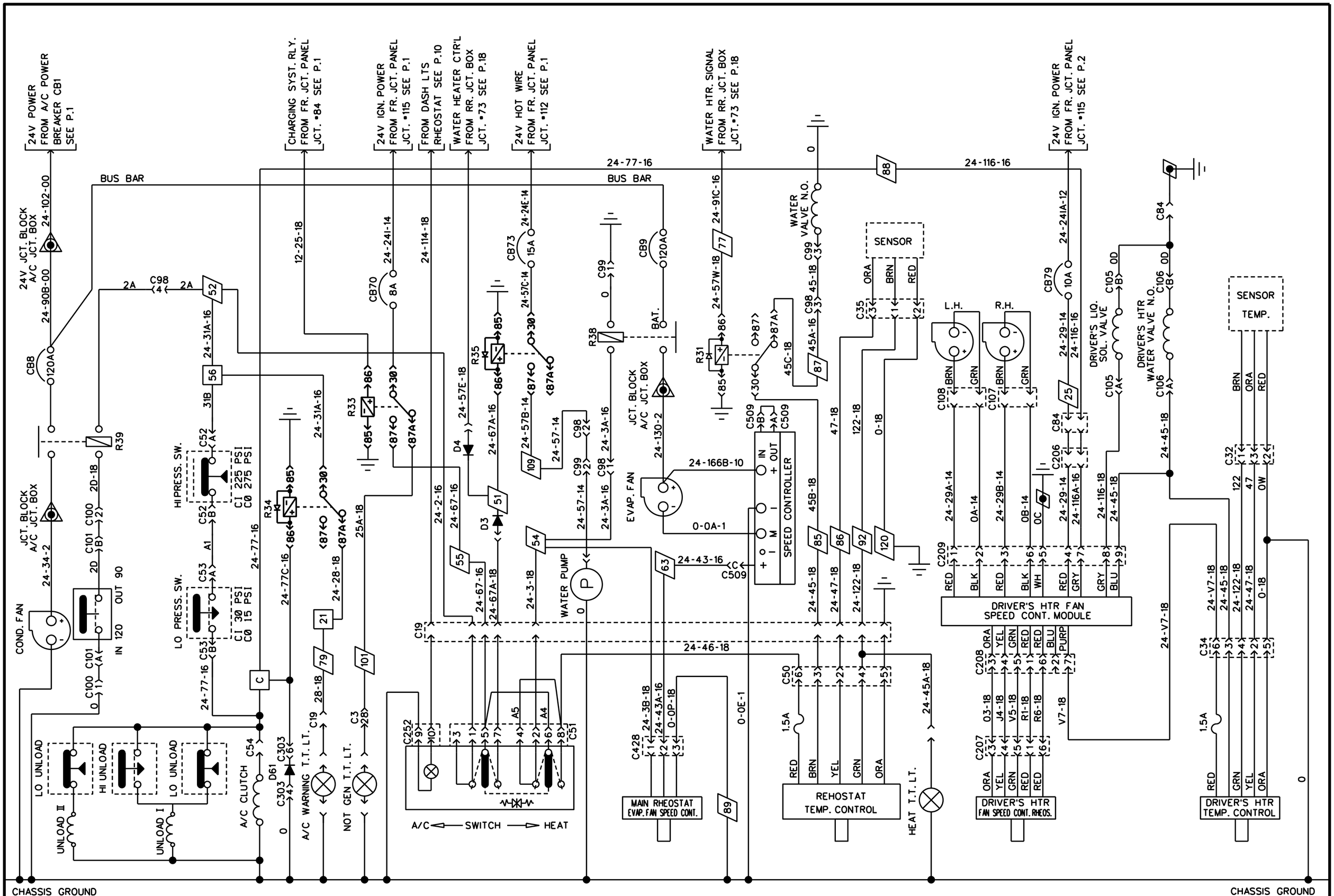

A/C AND HEAT SYSTEM (FULL AIR)