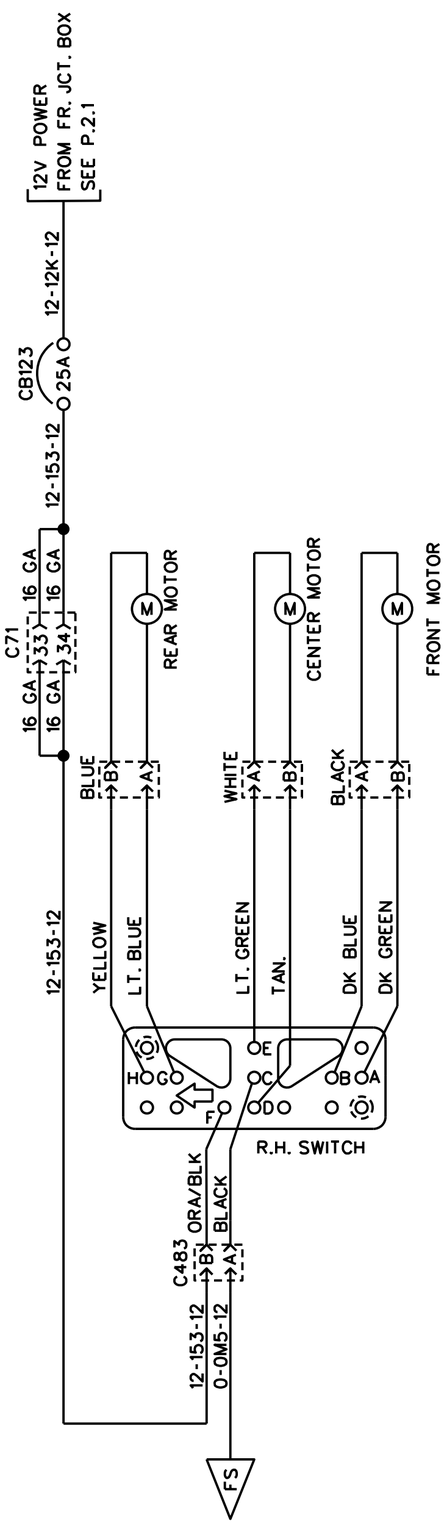

DRIVER'S SEAT ELECT. ADJ.

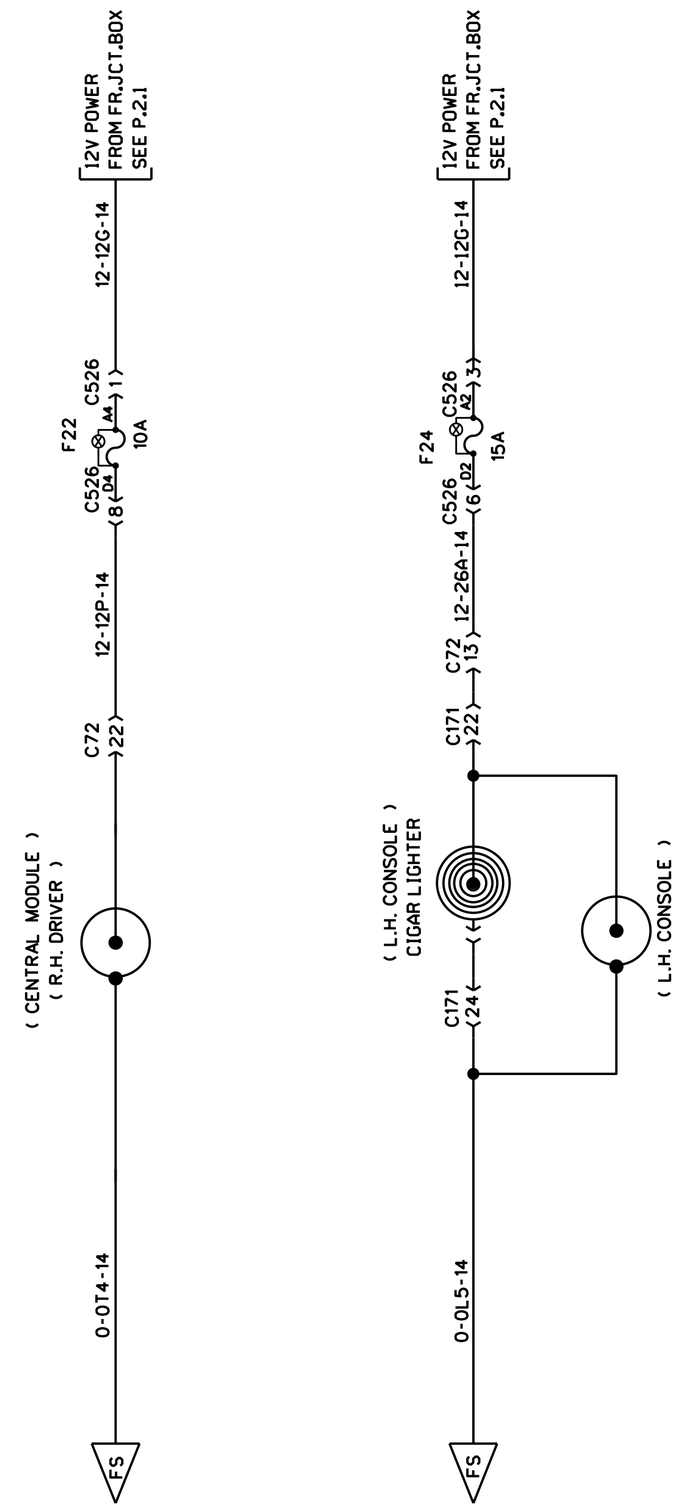

POWER 12 VOLT OUTLET