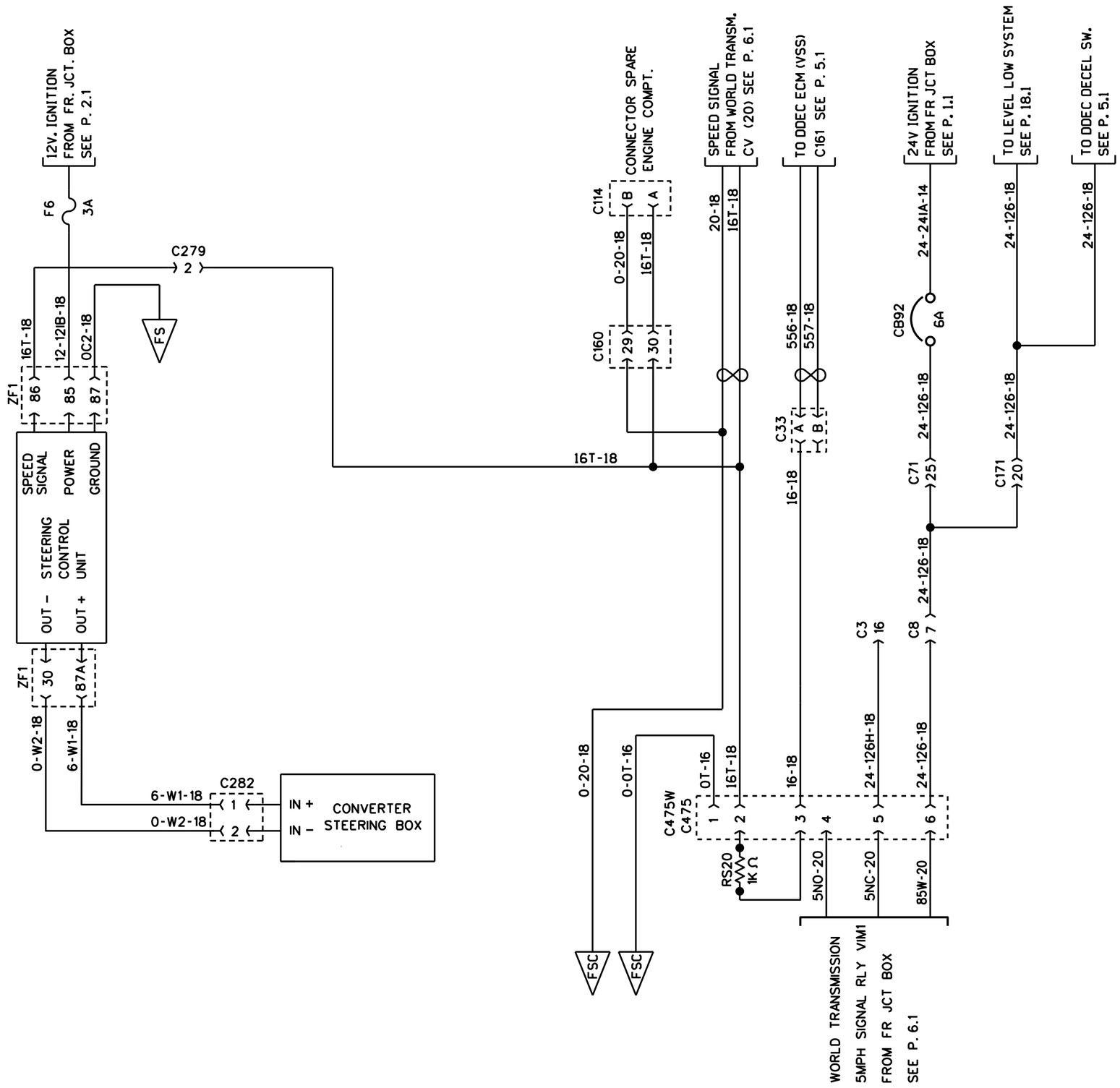

STEERING CONTROL

TRANSMISSION SPEED SIGNAL

PREVOST	WIRING DIAGRAM	NO: D060921	PAGE: 17.1	REVISION 00