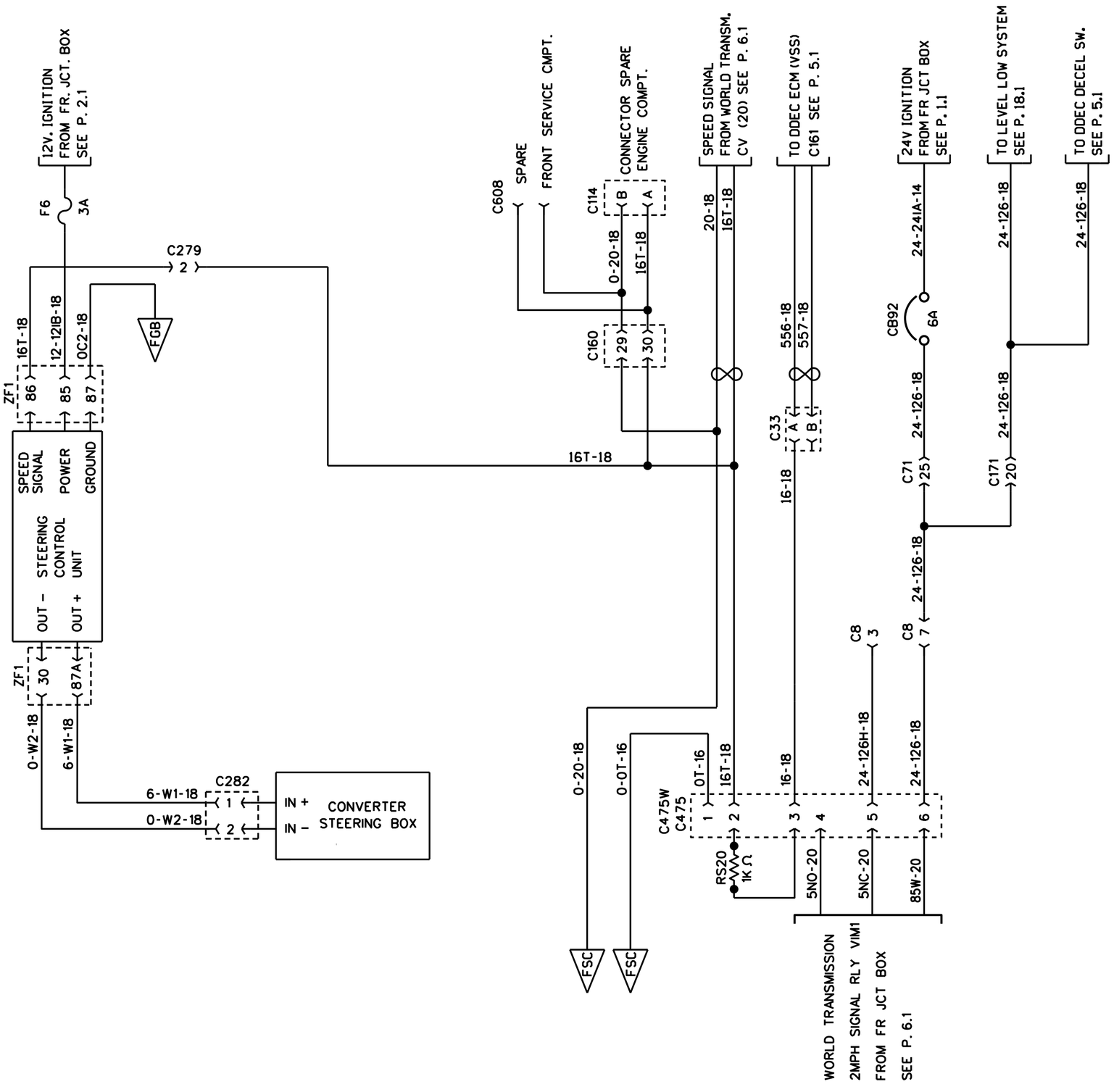

STEERING CONTROL | TRANSMISSION SPEED SIGNAL