GROUNDS PA WIRING DIAGRAM

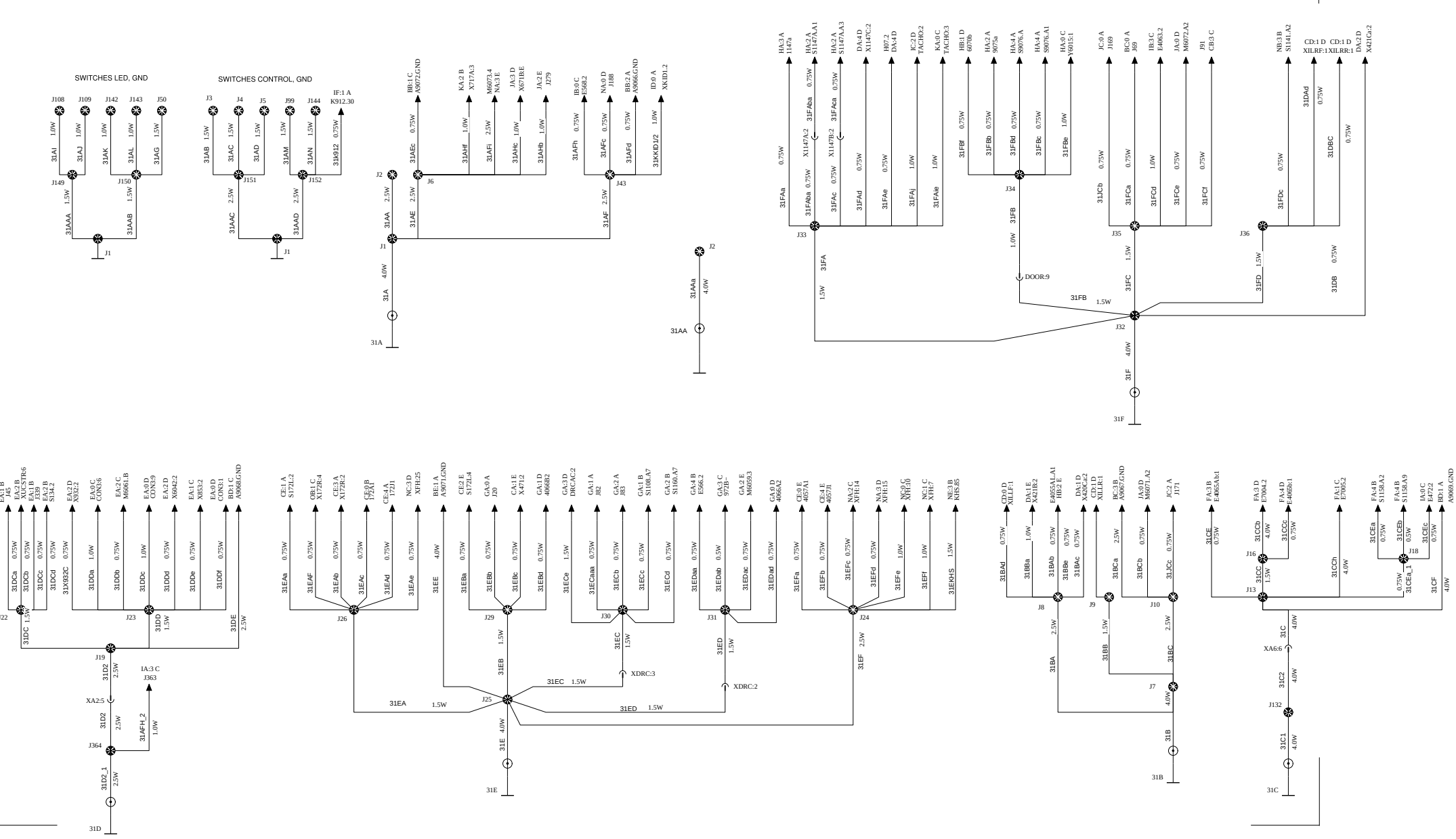

VOLVO	Volvo Bus Corporation	Document title: WIRING DIAGRAM	Document No	Issue	Volume	Page
		Document type: PRODUCT SCHEMATIC	21894999	02	01	62/65