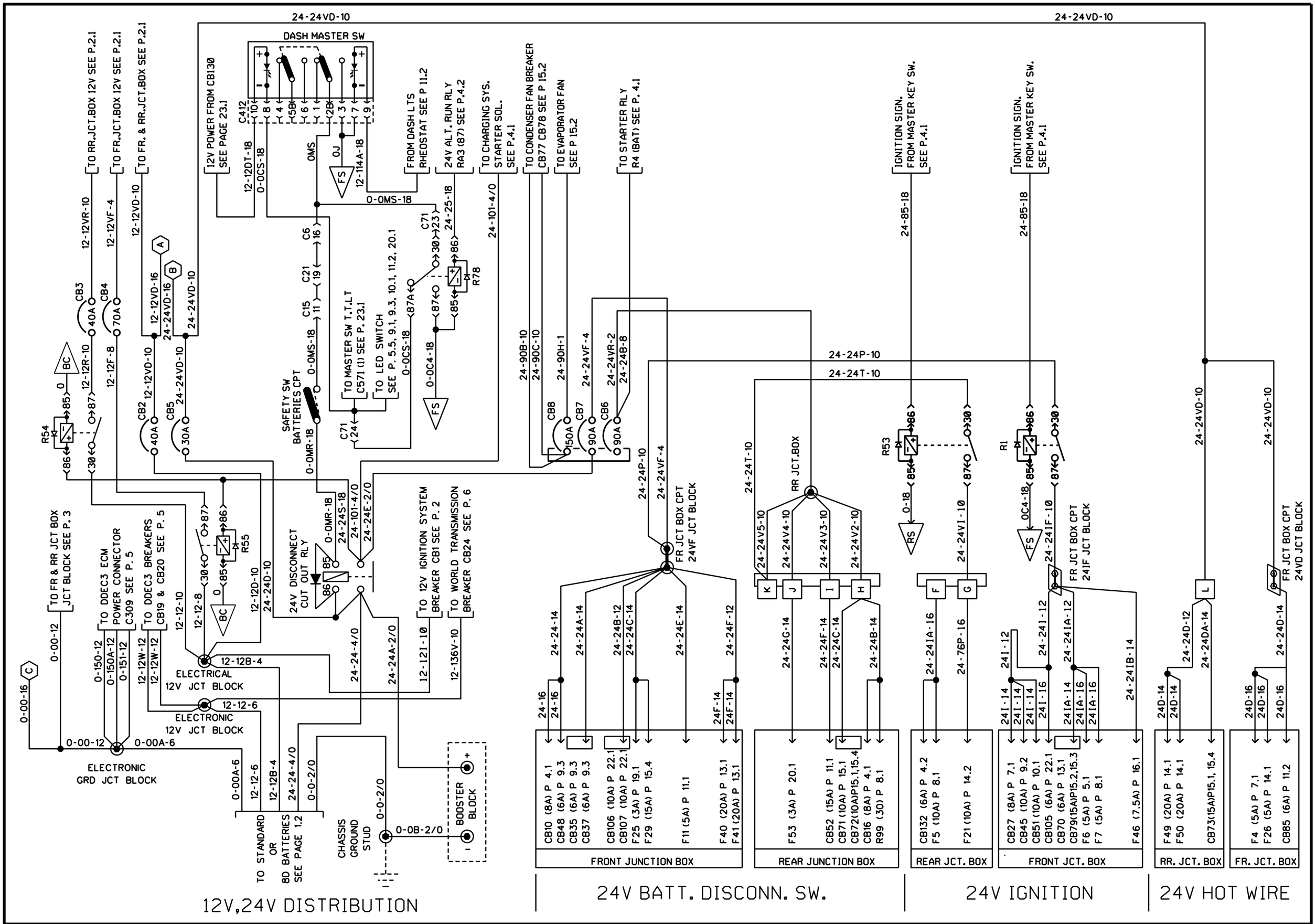

PREVOST	WIRING DIAGRAM	NO: D060912	SPECIAL VIP CALOUN PAGE: 1.1 SP1	REVISION 13