Lavatory and No Smoking Sign

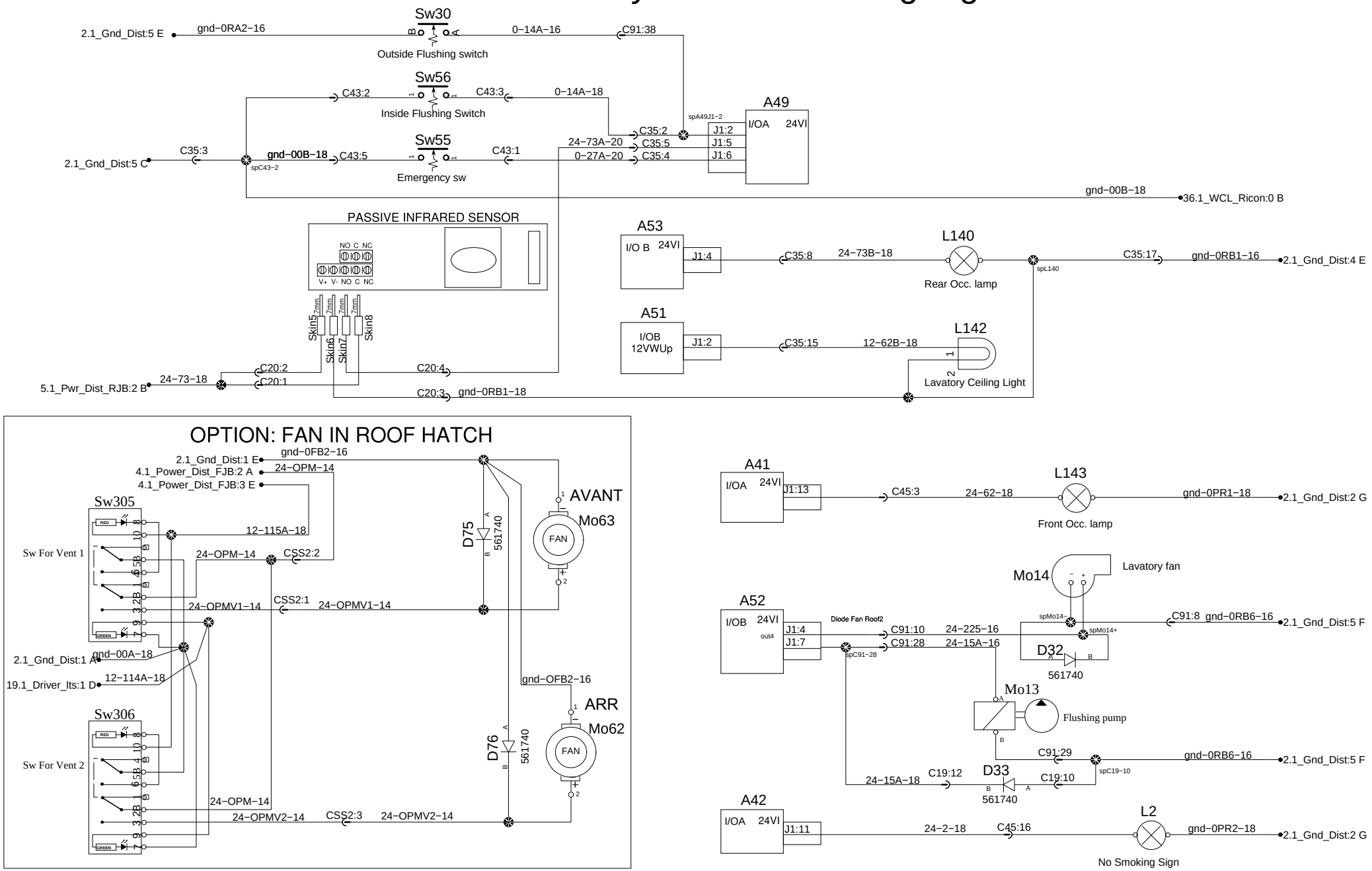

PREVOST®

WIRING DIAGRAM

No:D061020

Page:11.1 sp1

Rev:22