Luggage door lock switches

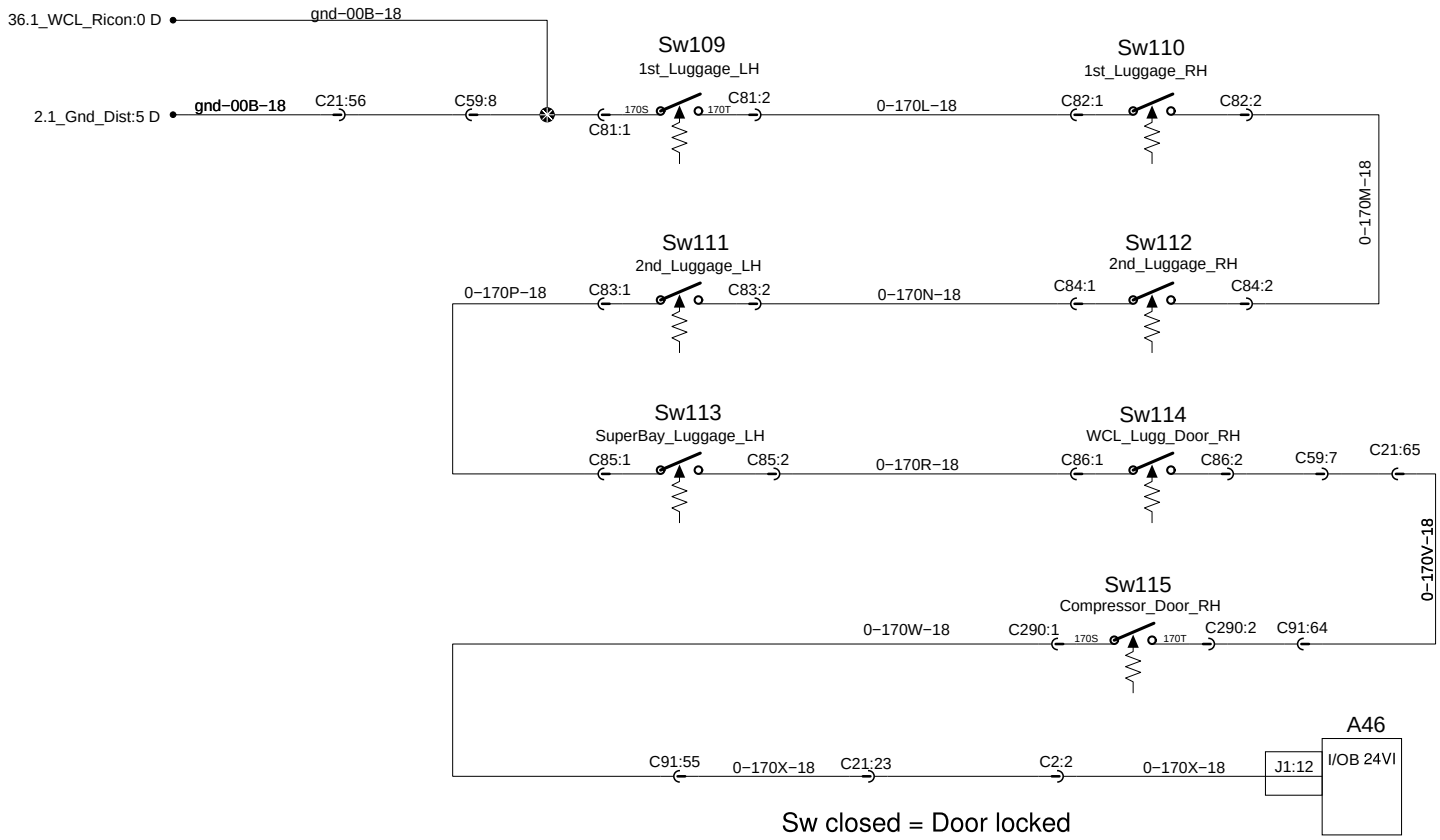

Sw closed = Door locked