# MAIN DISTRIBUTION Batteries & Ignition

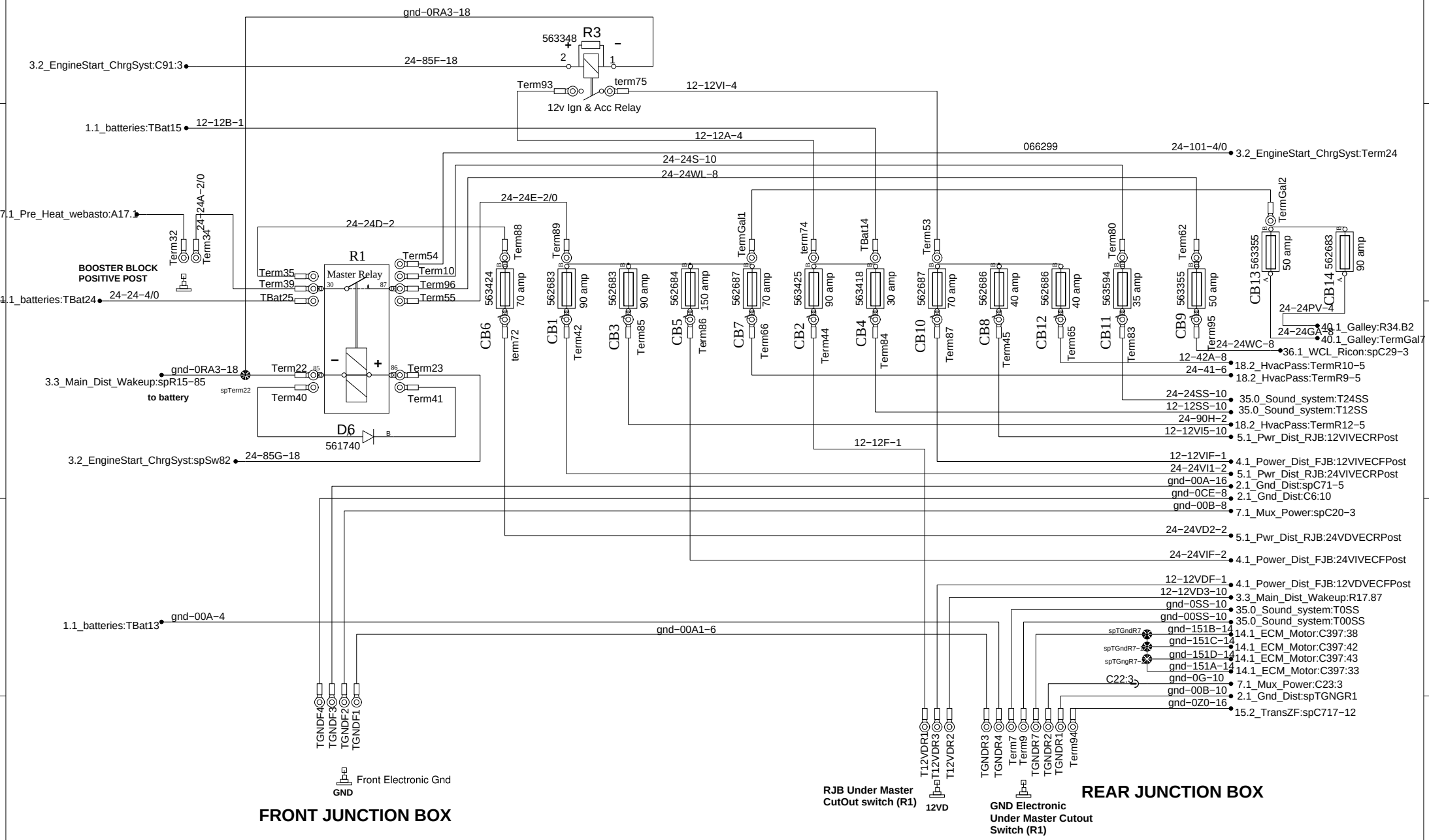


| PREVOST® | WIRING DIAGRAM | No:D061020 | Page:3.1 | Rev:9 |
|---|---|---|---|---|