MAIN DISTRIBUTION Batteries & Ignition

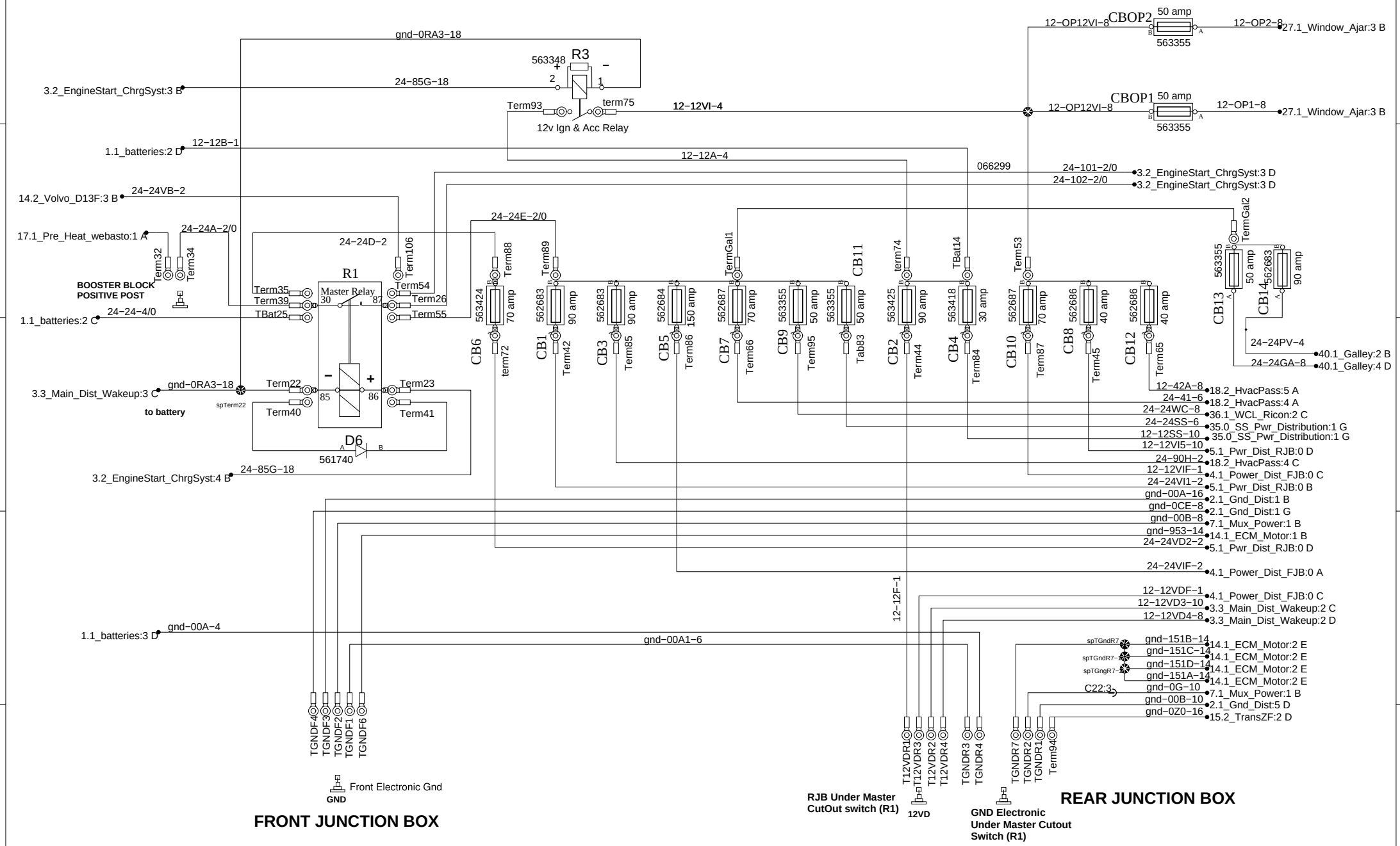

PREVOST®	WIRING DIAGRAM	No:D061020	Page:3.1 sp2	Rev:0