Le Mirage XL II

PARTS MANUAL

PREVOST

COACH MANUFACTURER

PARTS MANUAL

PA1152

07-2024

Le Mirage XL II

PARTS MANUAL

General information

A. Vehicle Identification Number (V.I.N.)

Each time spare parts have to be ordered, you must refer to your vehicle identification number serial number. In order to understand the meaning of this number, please refer to the following:

2 P C X 3 3 4 9 5 Y 1 0 2 6951

X = VEHICLE MODEL
9 = VEHICLE LENGHT
Y= MODEL YEAR
6951= SEQUENCE NUMBER

Vehicle Model
This manual covers vehicle model XL coaches and MTH bus shells.

X	XL-II coaches
W	MTH bus shell
Y	MTH bus shell Entertainer

Vehicle Length

0	40 feet	**9**	45 feet

Model Year

YEAR	CODE	YEAR	CODE	YEAR	CODE	YEAR	CODE
1999	X	2002	2	2005	5	2008	8
2000	Y	2003	3	2006	6	2009	9
2001	1	2004	4	2007	7	2010	A

Sequence Number
This number represents the sequence the vehicle has followed on the assembly line. Since 1996 model year, the sequence number is represented by the last four digits

B. Effectivity

This manual covers information for vehicles from the Y-7046 to present.

The heading of each page in this manual refers to an effectivity serial number and in the parts description, you may find additional information on the effectivity of a specific part to a serial number (refer to FROM:).

In the description, you may also remark the expression UP TO which means that a component is effective to the vehicles manufactured up to the specified serial number (refer to UP TO:).

PARTS MANUAL

C. Illustrations

An exploded view is conveniently located at the beginning of each section and is meant to assist the user in identifying parts and components.

The illustrations show the typical construction of the different assemblies and , in all cases, may not reproduced the full detail or exact shape of parts shown, however, they represent parts which have same or similar function.

D. General

The information, illustrations and components/system descriptions contained in this manual are correct at time of publication. Prévost Car Inc., however, maintains a policy of continuous improvement of its product without imposing upon itself any obligation to install them on products previously manufactured.

Prévost Car Inc., reserves the right at any time to discontinue or change specifications, designs, features, models or equipment without incurring obligation.

PARTS MANUAL

E. Parts and Service Center

CANADA

Canadian Parts Customer Service 2955-A Watt Street Québec, Québec Canada, G1X 3W1	Toll free phone: 1 (800) 463-8876 Tel.: (418) 654-0174 Fax: (800) 939-0133 Fax: (418) 658-1723	**Service Center British Columbia** 11911 No. 5 Road Richmond, British Columbia Canada, V7A 4E9	Tel.: (604) 940-3306 Fax: (604) 940-3384
Service Center 850 Chemin Olivier Saint-Nicolas, Quebec Canada G7A 2N1	Toll free phone: 1 866 870-2046 Tel.: (418) 831-2046 Fax: (418) 831-7432	**Service Ontario** 8301-A Keele Street Vaughan, Ontario Canada, L4K 1Z6	Tel.: (905) 738-0881 Fax: (905) 738-0891
Service Center Alberta 292 MacDonald Crescent Fort McMurray, Alberta Canada T9H 4B6	Tel.: (780) 792-9526 Fax: (780) 743-0983		

UNITED STATES

US Parts Customer Service 2250 Point Blvd., Suite 410 Elgin, IL USA, 60123	Toll free phone 1 800 799-9938 Main office (847) 844-7680 Parts 1 800 621-5519	**Prevost Parts & Service Center** 800 South Cartwright Street Goodlettsville, TN USA, 37072	Toll free phone 1 877 299-8881 Main office (615) 299-8881 Fax: (615) 299-8816 After-Hours (615) 519-1372 Parts Emergency
Prevost Parts & Service Center 3384 De Forest Circle Mira Loma, CA USA, 91752	Toll free phone 1 800 421-9958 Main office (951) 360-2550 Fax: (951) 360-2560 After-Hours (951) 314-0226 Parts Emergency	**Prevost Parts & Service Center** 201 South Avenue South Plainfield, NJ USA, 07080	Toll free phone 1 800 223-0830 Main office (908) 222-7211 Fax: (908) 222-7304 Fax parts (908) 222-7305 After-Hours (201) 315-4064 Parts Emergency
Prevost Parts & Service Center 6821 Central Avenue, Newark, CA USA, 94560	Main office (310) 283-1852 After-Hours: (951) 314-0226 Parts Emergency	**Prevost Parts & Service Center** 15200 Frye Road Fort Worth, TX USA, 76155-2702	Service/Parts 1 866 773-8678 Main office (817) 685-0250 Fax : (817) 685-0460 After-Hours (817) 271-8653 Parts Emergency
Prevost Parts & Service Center 6931 Business Park Blvd North Jacksonville, FL USA, 32256	Toll free phone 1 800 874-7740 Main office (904) 886-4555 Fax: (904) 886-0092 After-Hours (904) 412-8023 Parts Emergency	**Prevost Parts & Service Center** 11851 Cutten Road Houston, TX USA, 77066	Service/Parts 1 877 602-0273 Main office (713) 849-8562 Fax: (281) 315-1571 After-Hours (346) 333-5520 Parts Emergency
Prevost Parts & Service Center 1300 Green Forest Court Winter Garden, FL USA, 34787	Toll free phone 1 866 726-6235 Main office (407) 554-0196 After-Hours: (407) 259-5720 Parts Emergency	**Prevost Parts & Service Center** 3715 N. Carnation St. Franklin Park, IL USA, 60131	Main office (847) 778-7475 Fax: (847) 737-2242 After-Hours 1 800 463-7738 Parts Emergency

PARTS MANUAL

KEY & ABBREVIATIONS

(XXXX-XX) ..... SEE PAGE
<>..... BETWEEN
° ..... DEGREE
..... NUMBER
?? ..... INFORMATION NOT AVAILABLE AT TIME OF PUBLICATION

ABS..... ANTILOCK BRAKING SYSTEM
AR..... AS REQUIRED
ASSY..... ASSEMBLY
CCW ..... COUNTERCLOCKWISE
C.E. ..... COMMUTATOR END
CHR ..... CHROME
CW ..... CLOCKWISE
CYL. ..... CYLINDER
C/C ..... CENTER/CENTER
D.E. ..... DRIVE END
DIA. ..... DIAMETER
DIFF. ..... DIFFERENTIAL
D.P.D.T. ..... DOUBLE POLE DOUBLE THROW
ECU ..... ELECTRONIC CONTROL UNIT
EDU ..... ELECTRONIC DISTRIBUTOR UNIT
EFF ..... EFFECTIVE
ENG. ..... ENGINE
EXT ..... EXTERNAL
FR ..... FRONT
GND ..... GROUND
HD ..... HEAD
HEX ..... HEXAGONAL
H.P. ..... HIGH PRESSURE
HVAC ..... HEATING, VENTILATION & AIR CONDITIONING
HYD ..... HYDRAULIC
I.D. ..... INSIDE DIAMETER
INT ..... INTERNAL
JCT ..... JUNCTION
LED ..... LIGHT-EMITTING DIODE
L.P. ..... LOW PRESSURE
LUGG. ..... LUGGAGE
M & F ..... MALE & FEMALE
N/A ..... NOT AVAILABLE
NEG. ..... NEGATIVE
N.O. ..... NORMALY OPEN
N.C. ..... NORMALY CLOSE
N.P.N. ..... NO PARTS NUMBER
NPT ..... NATIONAL PIPE THREAD
NS ..... NOT SHOWN
N.S.P. ..... NOT SOLD AT PREVOST (SEE MANUFACTURING PART NUMBER AT THE END OF DESCRIPTION LINE)
N.S.S. ..... NOT SOLD SEPARATELY
O.D. ..... OUTSIDE DIAMETER
OPT. ..... OPTION
O.S. ..... OVERSIZE
PH ..... PHILLIPS
POS. ..... POSITIVE
RR ..... REAR
S.C.C. ..... SPECIFY COLOR CODE
SCT ..... SECTION
S.D. ..... SPECIFY DIMENSION
S.L. ..... SPECIFY LENGHT
SM ..... SMALL
S.P.S.T. ..... SINGLE POLE SINGLE THROW
S.P.D.T. ..... SINGLE POLE DOUBLE THROW
S.Q. ..... SPECIFY QUANTITY
SS ..... STAINLESS STEEL
STD ..... STANDARD
STO ..... STOVER
SW ..... SWIVEL
SWL FITT. ..... SWIVEL FITTING
TPG ..... TAPING
TH ..... THICKNESS
TRANS. ..... TRANSMISSION
TXV ..... THERMAL EXPANSION VALVE
U.S. ..... UNDERSIZE
W ..... WITH
W/O ..... WITHOUT
WIND. ..... WINDOW
ZP ..... ZINC PLATED

PARTS MANUAL

MEASUREMENT EQUIVALENTS

Fraction - Inches (dec.) - Millimeter 25.4mm = 1 inch 1mm = .03937 inch

fraction	decimal	mm	fraction	decimal	mm
1/64	0.0156	0.397	33/64	0.5156	13.097
1/32	0.0313	0.794	17/32	0.5313	13.494
-	0.0394	1	35/64	0.5469	13.891
3/64	0.0469	1.191	-	0.5512	14
1/16	0.0625	1.588	9/16	0.5625	14.288
5/64	0.0781	1.984	37/64	0.5781	14.684
-	0.0787	2	-	0.5906	15
3/32	0.0938	2.381	19/32	0.5938	15.081
7/64	0.1093	2.778	39/64	0.6094	15.478
-	0.1181	3	5/8	0.6250	15.875
1/8	0.1250	3.175	-	0.6299	16
9/64	0.1406	3.572	41/64	0.6406	16.272
5/32	0.1563	3.969	21/32	0.6563	16.669
-	0.1575	4	-	0.6693	17
11/64	0.1719	4.366	43/64	0.6719	17.066
3/16	0.1875	4.762	11/16	0.6875	17.462
-	0.1969	5	45/64	0.7031	17.859
13/64	0.2031	5.159	-	0.7087	18
7/32	0.2188	5.556	23/32	0.7188	18.256
15/64	0.2344	5.953	47/64	0.7344	18.653
-	0.2362	6	-	0.7480	19
1/4	0.2500	6.350	3/4	0.7500	19.050
17/64	0.2656	6.747	49/64	0.7656	19.447
-	0.2756	7	25/32	0.7813	19.844
9/32	0.2813	7.144	-	0.7874	20
19/64	0.2969	7.541	51/64	0.7969	20.241
5/16	0.3125	7.938	13/16	0.8125	20.638
-	0.3150	8	-	0.8268	21
21/64	0.3281	8.334	53/64	0.8281	21.034
11/32	0.3438	8.731	27/32	0.8438	21.431
-	0.3543	9	55/64	0.8594	21.828
23/64	0.3594	9.128	-	0.8661	22
3/8	0.3750	9.525	7/8	0.8750	22.225
25/64	0.3906	9.922	57/64	0.8096	22.622
-	0.3937	10	-	0.9055	23
13/32	0.4063	10.319	29/32	0.9063	23.019
27/64	0.4219	10.716	59/64	0.9219	23.416
-	0.4331	11	15/16	0.9375	23.812
7/16	0.4375	11.112	-	0.9449	24
29/64	0.4531	11.509	61/64	0.9531	24.209
15/32	0.4688	11.906	31/32	0.9688	24.606
-	0.4724	12	-	0.9843	25
31/64	0.4844	12.303	63/64	09844	25.003
12	0.5000	12.700	1/1	1	25.400
-	0.5118	13	-	-	-

PARTS MANUAL

TABLE OF CONTENTS

GENERAL	00
ENGINE	01
CLUTCH	02
FUEL	03
EXHAUST	04
COOLING	05
ELECTRICAL	06
TRANSMISSION	07
PROPELLER SHAFT	09
FRONT AXLE	10
REAR AXLE	11
BRAKE	12
WHEEL, HUBS & TIRES	13
STEERING	14
SUSPENSION	16
BODY	18
HEATING & AIR CONDITIONING	22
ACCESSORIES	23
WHEEL CHAIR LIFT	25

PARTS MANUAL

To have more information about fast moving parts, place an order for the book PA-1105 to your nearest parts order desk.

Thank you!

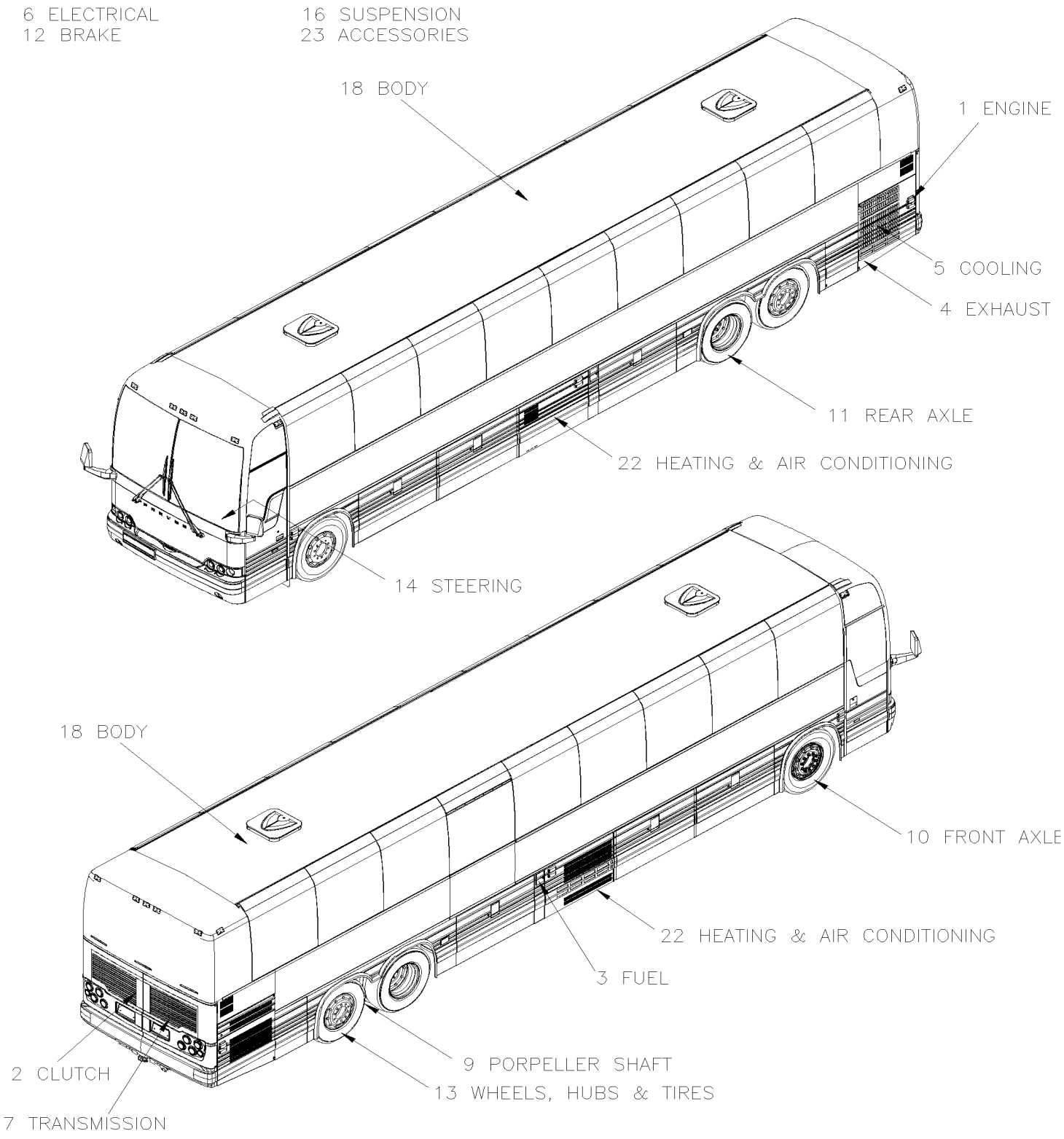
6 ELECTRICAL
12 BRAKE
16 SUSPENSION
23 ACCESSORIES
18 BODY
1 ENGINE
5 COOLING
4 EXHAUST
11 REAR AXLE
22 HEATING & AIR CONDITIONING
14 STEERING
18 BODY
10 FRONT AXLE
22 HEATING & AIR CONDITIONING
3 FUEL
9 PORPELLER SHAFT
13 WHEELS, HUBS & TIRES
2 CLUTCH
7 TRANSMISSION

6 ELECTRICAL
12 BRAKE
16 SUSPENSION
23 ACCESSORIES

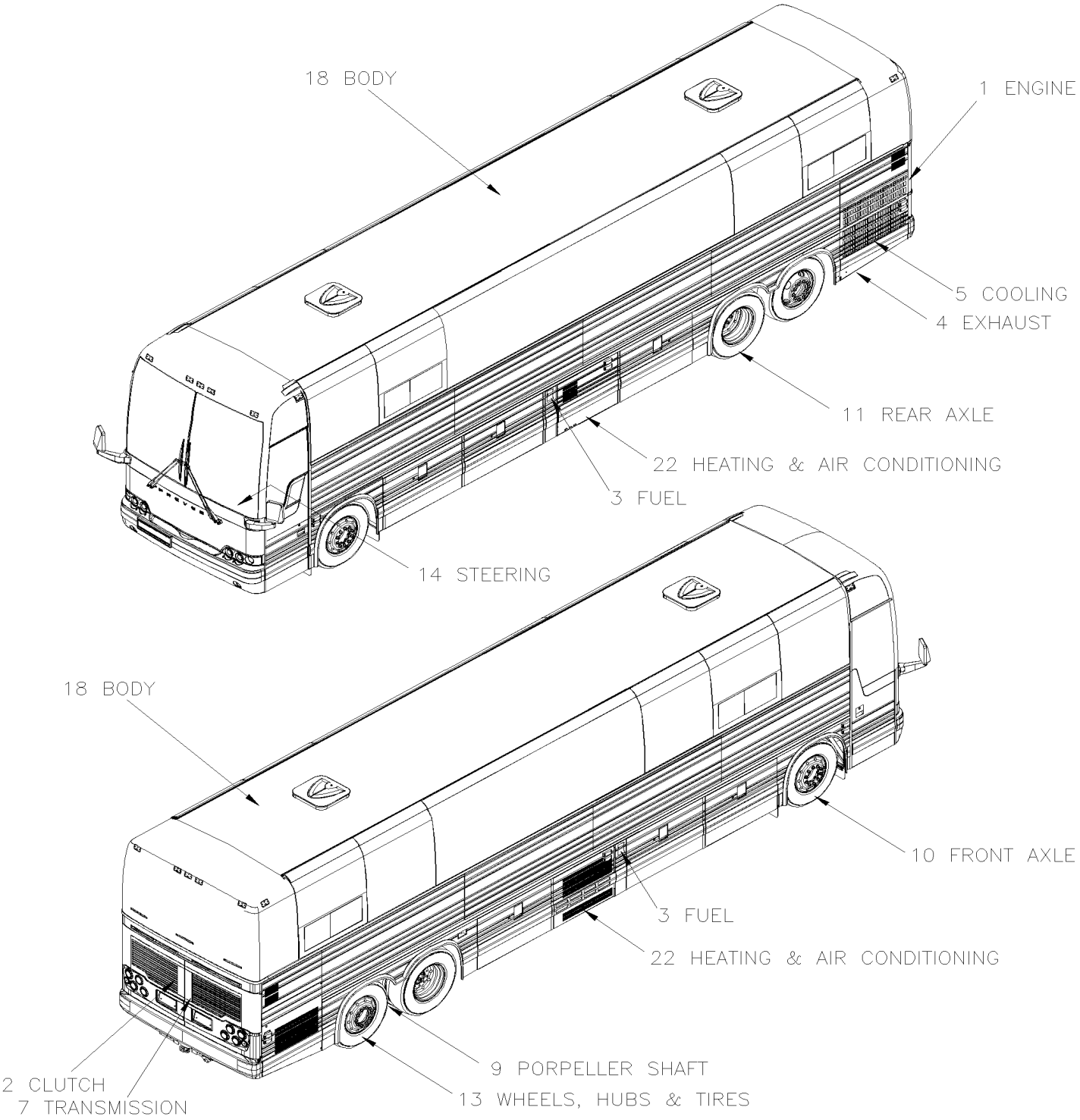

		Date:07/2024	PAGE:_XL-II
XL-II / BUS & MTH / 2000 - 2006 / VIN FROM Y-7046 TO 8-9339			

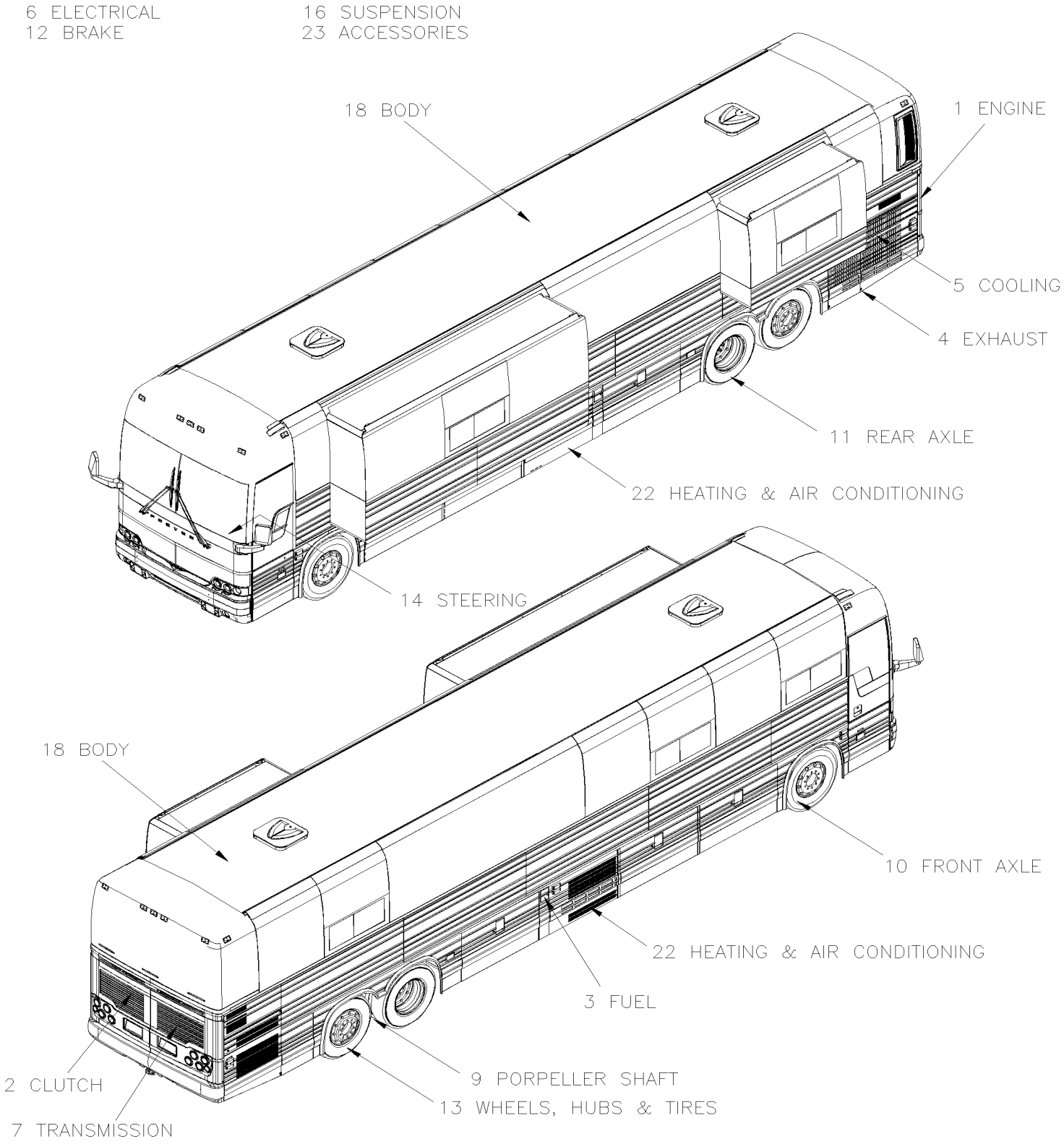

		Date:07/2024	PAGE:_XL-II
XL-II / BUS & MTH / 2000 - 2006 / VIN FROM Y-7046 TO 8-9339			

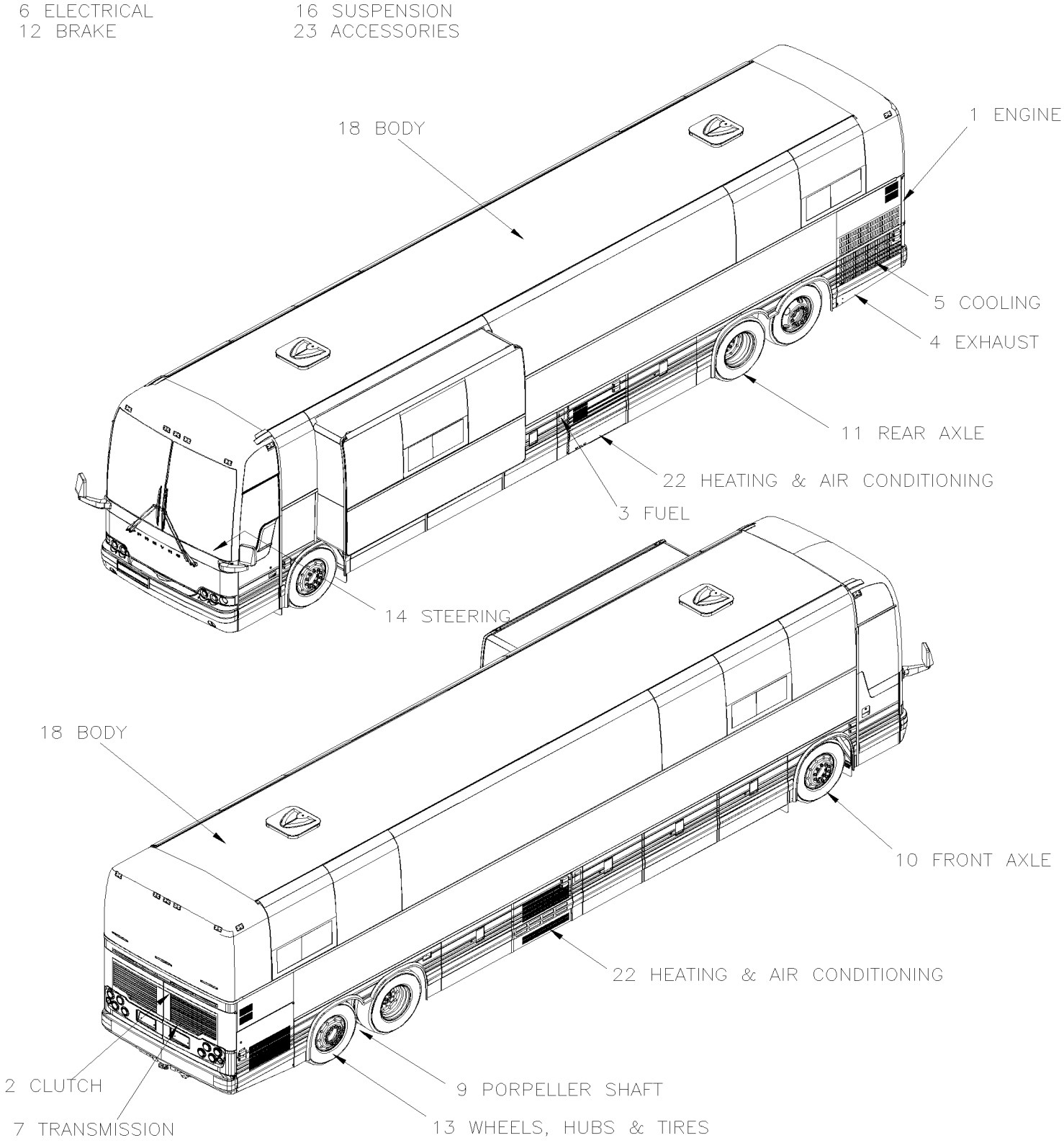

		Date:07/2024	PAGE:_XL-II

XL-II / BUS & MTH / 2000 - 2006 / VIN FROM Y-7046 TO 8-9339

Item#	Part	Description	XLII 45	XLII MTH40	XLII MTH45	XLII MTH45E	NOTES
		IF YES USE BOOK XL-II MTH (PA-1230)					
1	**Y2-01**	**ENGINE**					
2	**Y2-02**	**CLUTCH**					
3	**Y2-03**	**FUEL**					
4	**Y2-04**	**EXHAUST**					
5	**Y2-05**	**COOLING**					
6	**Y2-06**	**ELECTRICAL**					
7	**Y2-07**	**TRANSMISSION**					
9	**Y2-09**	**PROPELLER SHAFT**					
10	**Y2-10**	**FRONT AXLE**					
11	**Y2-11**	**REAR AXLE**					
12	**Y2-12**	**BRAKE**					
13	**Y2-13**	**WHEELS, HUBS & TIRES**					
14	**Y2-14**	**STEERING**					
16	**Y2-16**	**SUSPENSION**					
18	**Y2-18**	**BODY**					
22	**Y2-22**	**HEATING & AIR CONDITIONING**					
23	**Y2-23**	**ACCESSORIES**					
30	**Y2-SEATSET-00**	**PASSENGER'S SEAT SET**					
40	**Y2-DRIVER-00**	**DRIVER`S SEAT**					

		Date:07/2024	Y2-01
ENGINE			

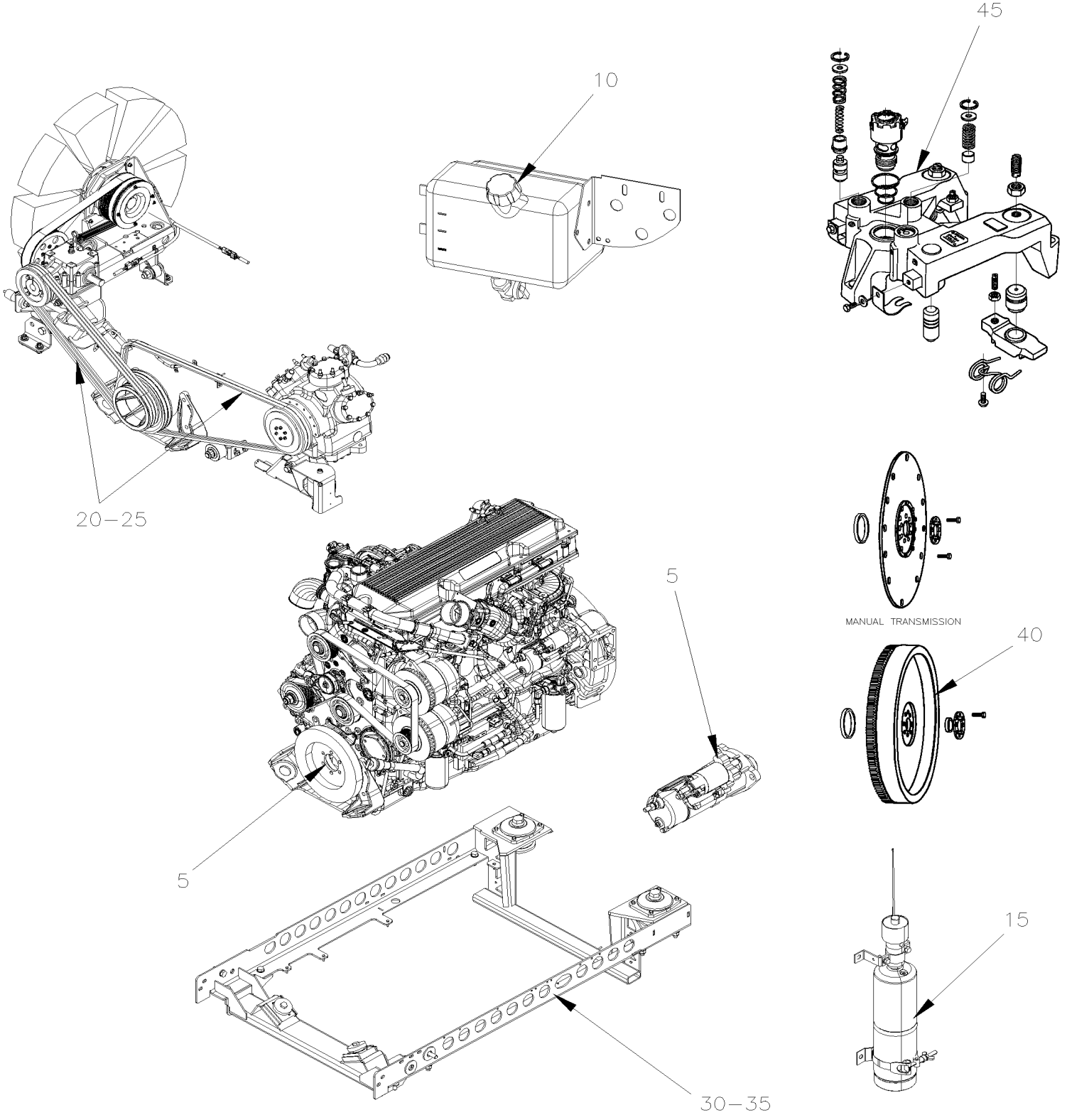

		Date:07/2024	Y2-01

ENGINE

Item#	Part	Description	XLII 45	XLII MTH40	XLII MTH45	XLII MTH45E	NOTES
5	Y2-0100-00	ENGINE WIRING HARNESS - INSTALLATION From Y-7046 To 8-9339					
10	Y2-0105-00	ENGINE OIL RESERVOIR - PLASTIC From Y-7046 To 8-9339					
12	Y2-0115-00	VPODS HOSE INSTALLATION From 4-8165 To 8-9339					
15	Y2-0116-00	STARTING AID - INSTALLATION From Y-7046 To 8-9339					
20	Y2-0120-00	DRIVE PULLEY & BELTS - BUS & MTH From Y-7046 To 8-9339					
20	Y2-0120-50	DRIVE PULLEY & BELTS - MTH From Y-7046 To 8-9339					
25	Y2-0125-00	BELTS TENSIONERS - WITH DETROIT S-60 From Y-7046 To 3-8164					
25	Y2-0125-01	BELTS TENSIONERS - WITH DETROIT S-60 From 4-8165 To 8-9339					
30	Y2-0150-00	ENGINE CRADLE - WITH DETROIT S-60 From Y-7046 To 4-8345					
30	Y2-0150-01	ENGINE CRADLE - WITH DETROIT S-60 From 4-8346 To 8-9339					
35	Y2-0155-10	ENGINE TRANSMISSION GUARD & AIR SHIELD DETROIT S-60 From Y-7046 To 8-9339					
40	Y2-0160-00	FLYWHEEL - WITH MANUAL TRANS From Y-7462 To 8-9339					
45	Y2-0165-00	JACOB'S - ENGINE BRAKE - WITH DETROIT S-60 From Y-7046 To 8-9339					

From Y-7046 To 8-9339		Date:07/2024	PAGE:Y2-0100-00
ENGINE WIRING HARNESS - INSTALLATION			

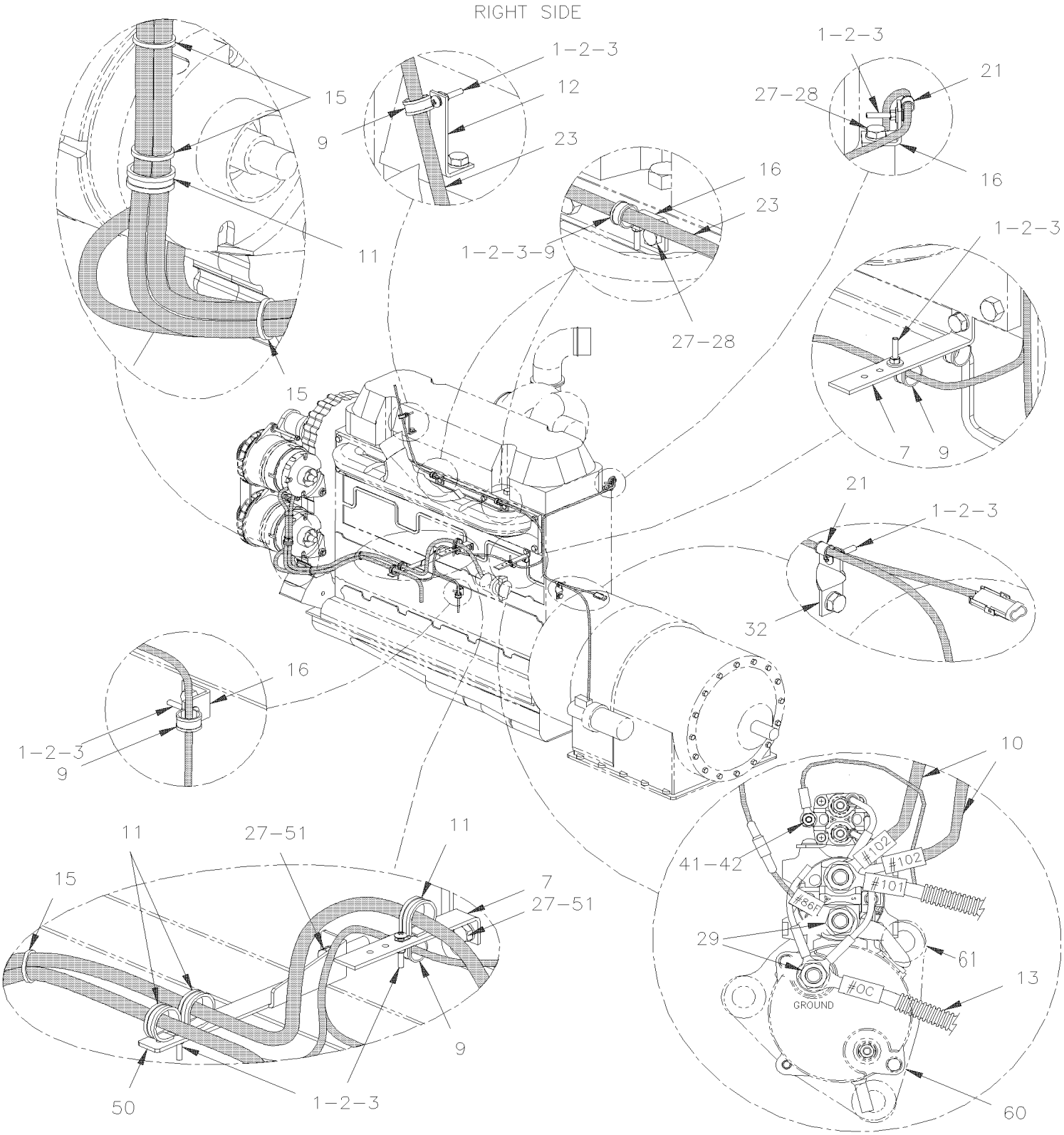

From Y-7046 To 8-9339		Date:07/2024	PAGE:Y2-0100-00
ENGINE WIRING HARNESS - INSTALLATION			

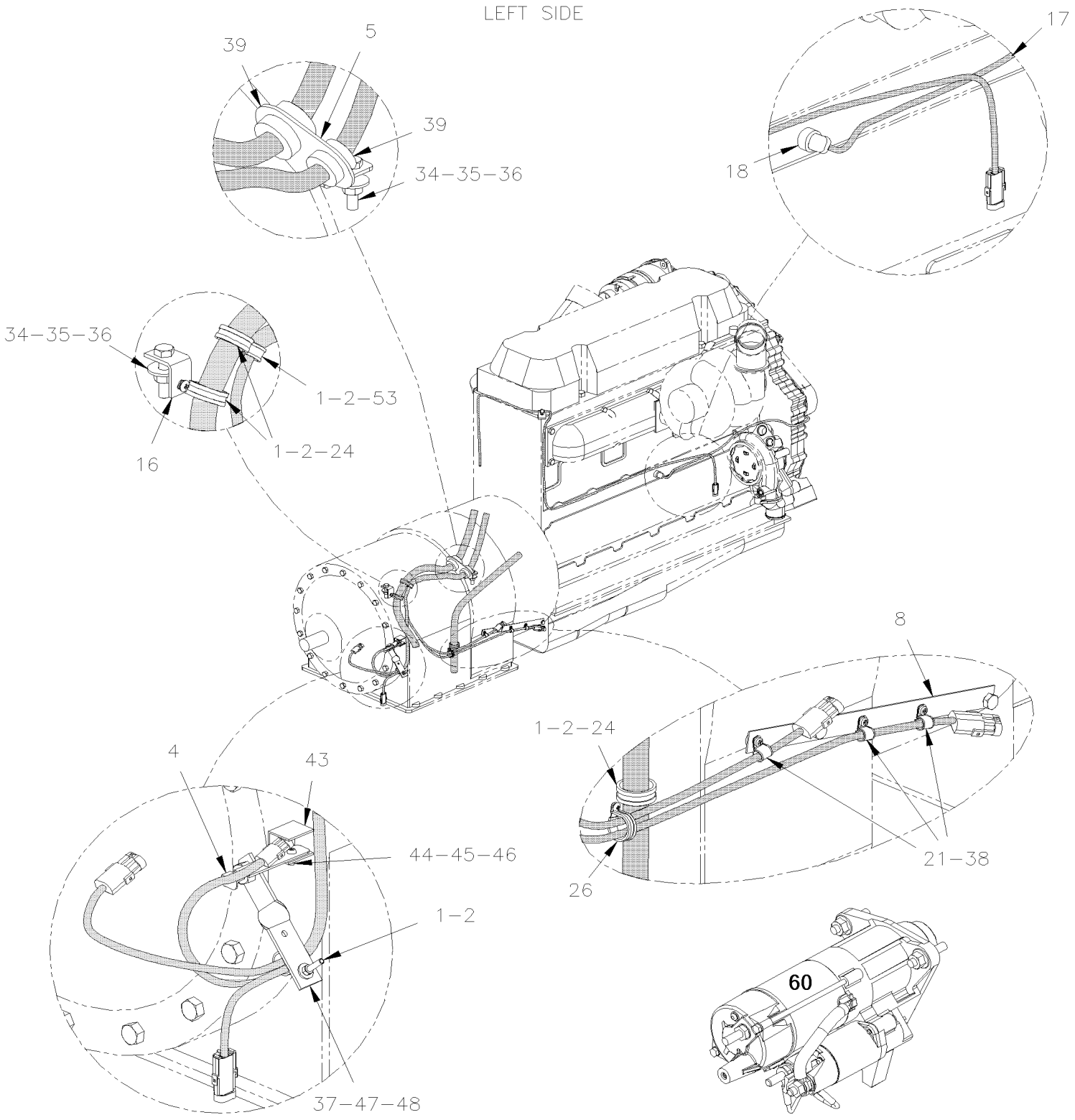

From Y-7046 To 8-9339		Date:07/2024	PAGE:Y2-0100-00

ENGINE WIRING HARNESS - INSTALLATION

Item#	Part	Description	XLII 45	XLII MTH40	XLII MTH45	XLII MTH45E	NOTES
1	500574	SCREW MA TR PH #10-24x1 1/4 SS	AR	AR	AR	AR	
2	500786	NUT HEX #10-24 Z050	AR	AR	AR	AR	
3	500440	WASHER FL .250x.562x.065 Z050	AR	AR	AR	AR	
4	504637	CABLE TIE / 3/16" x 13"	AR	AR	AR	AR	
5	071035	SUPPORT CABLE HARNESS / W/2 HOLES / WTEC III To 7-9000	1	1	1	1	
5	071403	SUPPORT CABLE HARNESS / W/1 HOLE & 1 STUD / GEN IV From 7-9001	1	1	1	1	
6	065697	SUPPORT HARNESS / LONG	1	1	1	1	
7	010667	SUPPORT	2	2	2	2	
8	071029	SUPPORT CABLE / STRAP 298MM	1	1	1	1	
9	952631	CLAMP / 3/4" I.D.	6	6	6	6	
10	064740	CABLE ASSY W/ALTERNATOR # 102-2/0	2			2	
11	952637	CLAMP / 1"1/16 I.D.	3	3	3	3	
12	070368	SUPPORT	1	1	1	1	
13	062214	CABLE ASSY # 0C	1	1	1	1	
NS	062212	CABLE ASSY # 0B	1	1	1	1	
15	504016	CABLE TIE / 5/16" X 14"1/2	1	1	1	1	
16	061025	SUPPORT	1	1	1	1	
17	063295	CABLE ASSY / 110V BLOCK HEATER ENGINE SECTION	1	1	1	1	
18	560410	BLOCK HEATER	1	1	1	1	
19	5002254	WASHER FL .500X.750X.062, SS302	AR	AR	AR	AR	
20	684013	RUBBER PROTECTOR / COLOR GUARD 14.5oz	AR	AR	AR	AR	
21	952625	CLAMP / 3/8" I.D.	2	2	2	2	
22	065027	CABLE GROUND ALT "BOSCH"	2			2	
23	064881	CABLE ASSY / ENGINE ACCESSORIES To 2-7823	1	1	1	1	
23	065598	CABLE ASSY / ENGINE ACCESSORIES From 2-7824 To 3-8164	1	1	1	1	
23	065786	CABLE ASSY / ENGINE ACCESSORIES From 4-8165 To 4-8279	1	1	1	1	
23	066008	CABLE ASSY / ENGINE ACCESSORIES From 4-8280 To 5-8425	1	1	1	1	
23	066200	CABLE ASSY / ENGINE ACCESSORIES From 5-8426 To 7-9000	1	1	1	1	
23	066848	CABLE ASSY / ENGINE ACCESSORIES From 7-9001		1	1	1	
24	952635	CLAMP / 1" I.D.	3	3	3	3	
25	500257	WASHER LO SPT 10.2x18.1x2.2 Z050	AR	AR	AR	AR	
26	060025	CLAMP / 5/8" I.D / W/HOLE 13/32" To 3-8164	1	1	1	1	
. NS	952629	. CLAMP / 5/8" I.D. To 3-8164	1	1	1	1	
26	952629	CLAMP / 5/8" I.D. From 4-8165	2	2	2	2	
27	502559	SCREW CAP HEX M10-1.5x25 G8.8 Z050	AR	AR	AR	AR	
28	500441	WASHER FL .312x.734x.065 Z050	AR	AR	AR	AR	
29	500482	WASHER LO SPT .506x.873x.125 Z050	AR	AR	AR	AR	
30	500857	WASHER LO INT .512x.900x.045 Z050	AR	AR	AR	AR	
31	500850	SCREW CAP HEX M12-1.75X25 G8.8 Z050	AR	AR	AR	AR	
32	061027	SUPPORT 2"1/2 LG	1	1	1	1	
33	500860	NUT HEX M12-1.75 Z050	AR	AR	AR	AR	
34	502549	SCREW CAP HEX M10-1.5x35 G8.8 Z050	AR	AR	AR	AR	

From Y-7046 To 8-9339		Date:07/2024	PAGE:Y2-0100-00

ENGINE WIRING HARNESS - INSTALLATION

Item#	Part	Description	XLII 45	XLII MTH40	XLII MTH45	XLII MTH45E	NOTES
35	500680	NUT HEX STO M10-1.5 Z050	AR	AR	AR	AR	
36	502644	WASHER FL 10.5x30.0x2.5 Z050	AR	AR	AR	AR	
37	061129	SUPPORT FLAT TWISTED / TUBE DIPSTICK	1	1	1	1	
38	5001036	SCREW MA PAN PH M4-0.7x10 Z050	AR	AR	AR	AR	
39	064716	CABLE ASSY / TRANS & SPEED SWITCH To Y-7364	1	1	1	1	R
39	065330	CABLE ASSY / TRANS & SPEED SWITCH / W/RETARDER From Y-7365 To 3-7984	1	1	1	1	R
39	065750	CABLE ASSY / TRANS & SPEED SWITCH / W/RETARDER From 3-7985	1	1	1	1	R
39	064716	CABLE ASSY / TRANS & SPEED SWITCH To Y-7351	1	1	1	1	O
39	065331	CABLE ASSY / TRANS & SPEED SWITCH / W/O RETARDER From Y-7352 To 3-7984	1	1	1	1	O
39	065751	CABLE ASSY / TRANS & SPEED SWITCH / W/O RETARDER From 3-7985	1	1	1	1	O
40	064942	CABLE ASSY / W/2 "BOSCH" 140 AMPS To 5-8425	1			1	
41	502561	NUT HEX M5-0.8 Z050	AR	AR	AR	AR	
42	504601	CLAMP / 5/16" I.D. x .375 HOLE	1	1	1	1	R
43	065398	SUPPORT RETARDER TEMPERATURE SENSOR	1	1	1	1	R
44	500344	SCREW MA RND PH M4-0.7x12 Z050	AR	AR	AR	AR	R
45	502524	NUT HEX M4-0.7 Z050	AR	AR	AR	AR	R
46	502636	WASHER LO SPT 4.1x7.6x0.9 Z050	AR	AR	AR	AR	R
47	071097	PROTECTOR SUPPORT SS 102MM X 90MM	1	1	1	1	R
48	071096	PROTECTOR SUPPORT SS ANGLE SHAPE 61MM X 73MM To 7-9240	1	1	1	1	O
49	071440	PROTECTOR SUPPORT SS "V" SHAPE 80MM HIGH From 7-9241		1	1	1	O
50	065697	SUPPORT HARNESS / LONG To 3-8164	1	1	1	1	
50	382033	PROTECTOR "E.C.M." / PLASTIC From 4-8165	1	1	1	1	
50	952627	CLAMP / 1/2" I.D.	3	3	3	3	
50	**Y2-0155-10**	**ENGINE TRANSMISSION GUARD & AIR SHIELD DETROIT S-60**					
51	500257	WASHER LO SPT 10.2x18.1x2.2 Z050 To 3-8164	AR	AR	AR	AR	
51	502862	SCREW CAP HEX M8-1.25x20 G8.8 N500 From 4-8165	AR	AR	AR	AR	
NS	500381	WASHER FL 8.4x25.0x2.0 N500 From 4-8165	AR	AR	AR	AR	
60	510485	STARTER MOTOR / 24V 42MT "DELCO" To 3-8119	1	1	1	1	F
60	510752	STARTER MOTOR / W/RELAY From 3-8120	1	1	1	1	
. NS	510888	. SOLONOID KIT From 3-8120	1	1	1	1	
. . NS	IS752SOL	. . INSTRUCTION SHEET / SOLENOID REPLACEMENT From 3-8120	1	1	1	1	
. NS	510889	. SMALL STARTOR RELAY KIT / WITH CABLES From 3-8120	1	1	1	1	
. . NS	564095	. . SMALL STARTOR RELAY From 3-8120	1	1	1	1	
. . NS	IS752MAG	. . INSTRUCTION SHEET / MAGNETIC SWITCH REPLACEMENT From 3-8120	1	1	1	1	
60	510004	STARTER MOTOR / W/RELAY From 3-8120	1	1	1	1	
. NS	510011	. RELAY KIT From 3-8120	1	1	1	1	
. NS	510015	. SOLENOID KIT From 3-8120	1	1	1	1	
61	5001668	SCREW CB 12POINT 5/8-11x2 1/4	3	3	3	3	
NS	502884	WASHER LO SPT 16.2x27.4x3.5 N500	3	3	3	3	
NS	061025	SUPPORT To 2-7407	1	1	1	1	A
NS	561012	PROTECTOR, TRANS. SWITCH To 2-7407	1				A
NS	064765	CABLE ASSY BACK-UP To 2-7407	1				A

From Y-7046 To 8-9339		Date:07/2024	PAGE:Y2-0100-00

ENGINE WIRING HARNESS - INSTALLATION

Item#	Part	Description	XLII 45	XLII MTH40	XLII MTH45	XLII MTH45E	NOTES
NS	684013	RUBBER PROTECTOR / COLOR GUARD 14.5oz To 2-7407	AR				A
NS	070368	SUPPORT To 2-7407	1				A
NS	012260	KIT, RETROFIT STARTOR "MELCO"	1	1	1	1	
. NS	IS-02053C	. SEE INSTRUCTION SHEET	1	1	1	1	
		A) WITH "EATON TRANS"					
		F) FOR PRODUCT IMPROVEMENT, ASK KIT #012260 AND SEE INSTRUCTION SHEET					
		O) W/O RETARDER					
		R) WITH RETARDER					

From Y-7046 To 8-9339		Date:07/2024	PAGE:Y2-0105-00
ENGINE OIL RESERVOIR - PLASTIC			

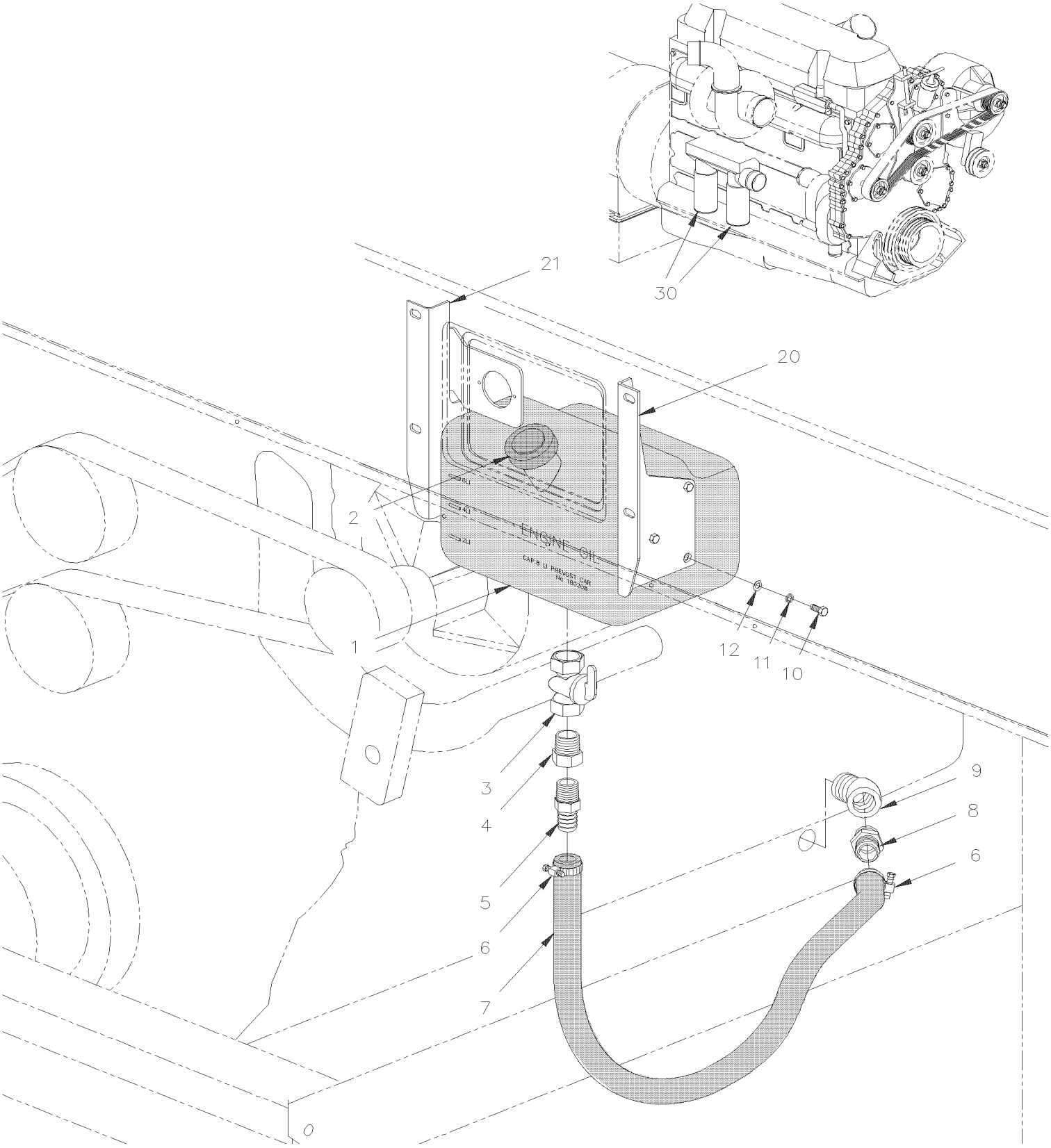

From Y-7046 To 8-9339		Date:07/2024	PAGE:Y2-0105-00

ENGINE OIL RESERVOIR - PLASTIC

Item#	Part	Description	XLII 45	XLII MTH40	XLII MTH45	XLII MTH45E	NOTES
1	180208	TANK OIL	1	1	1	1	
2	683477	CAP	1	1	1	1	
3	5011045	VALVE 3/4"	1	1	1	1	
4	501462	BUSHING REDUCER / PIPE FITTING / 3/4NTP-Mx1/2NPT-F BR	1	1	1	1	
5	507605	MALE CONNECTOR / HOSE BARB FITTING / #12x1/2NPT-M BR	1	1	1	1	
6	504020	HOSE CLAMP / 9/16"-1"1/4 SS / HS-12	2	2	2	2	
7	180196	HOSE #12 1853MM	1	1	1	1	
7	503547	. HOSE / RUBBER #12 / S.L.	AR	AR	AR	AR	
8	507605	MALE CONNECTOR / HOSE BARB FITTING / #12x1/2NPT-M BR	1	1	1	1	
NS	501462	BUSHING REDUCER / PIPE FITTING / 3/4NTP-Mx1/2NPT-F BR	1	1	1	1	
9	5011051	STREET ELBOW 45º / PIPE FITTING / 3/4NPT-Mx3/4NPT-F BR	1	1	1	1	
9	501528	STREET ELBOW 45º / PIPE FITTING / 1/2NPT-Mx1/2NPT-F BR		1	1	1	
10	502531	SCREW CAP HEX M6-1.0x16 G8.8 Z050	6	6	6	6	
NS	502564	WASHER LO SPT 6.1x11.8x1.6 Z050	6	6	6	6	
NS	403536	DECAL "OIL SPEC" / ENGLISH & FRANCAIS To 3-8164	1	1	1	1	
11	012182	DECAL "OIL SPEC" 15W/40 / ENGLISH & FRANCAIS From 4-8165	1	1	1	1	
11	012261	DECAL "OIL SPEC" 15W/40 / ENGLISH & SPANISH From 4-8165	1	1	1	1	
12	500411	WASHER FL .260x.697x.050 SS	6	6	6	6	
20	213960	SUPPORT L.H. / OIL RESERVOIR To 2-7888	1	1	1	1	
20	180239	SUPPORT L.H. / OIL RESERVOIR From 2-7889	1	1	1	1	
21	213268	SUPPORT R.H. / OIL RESERVOIR To 2-7888	1	1	1	1	
21	180240	SUPPORT R.H. / OIL RESERVOIR From 2-7889	1	1	1	1	
21	502862	SCREW CAP HEX M8-1.25x20 G8.8 N500	4	4	4	4	A
21	502889	WASHER LO SPT 8.1x12.7x2.0 N500	4	4	4	4	A
21	192288	WASHER FL 8.4x18.0x2.0 ZG603	4	4	4	4	A
30	510458	OIL FILTER, CARTRIDGE / PF-2100 / ENGINE / W/SERIES 60	2	2	2	2	
		A) TO FIX AT STRUCTURE					

From 4-8165 To 8-9339		Date:07/2024	PAGE:Y2-0115-00
VPODS HOSE INSTALLATION			

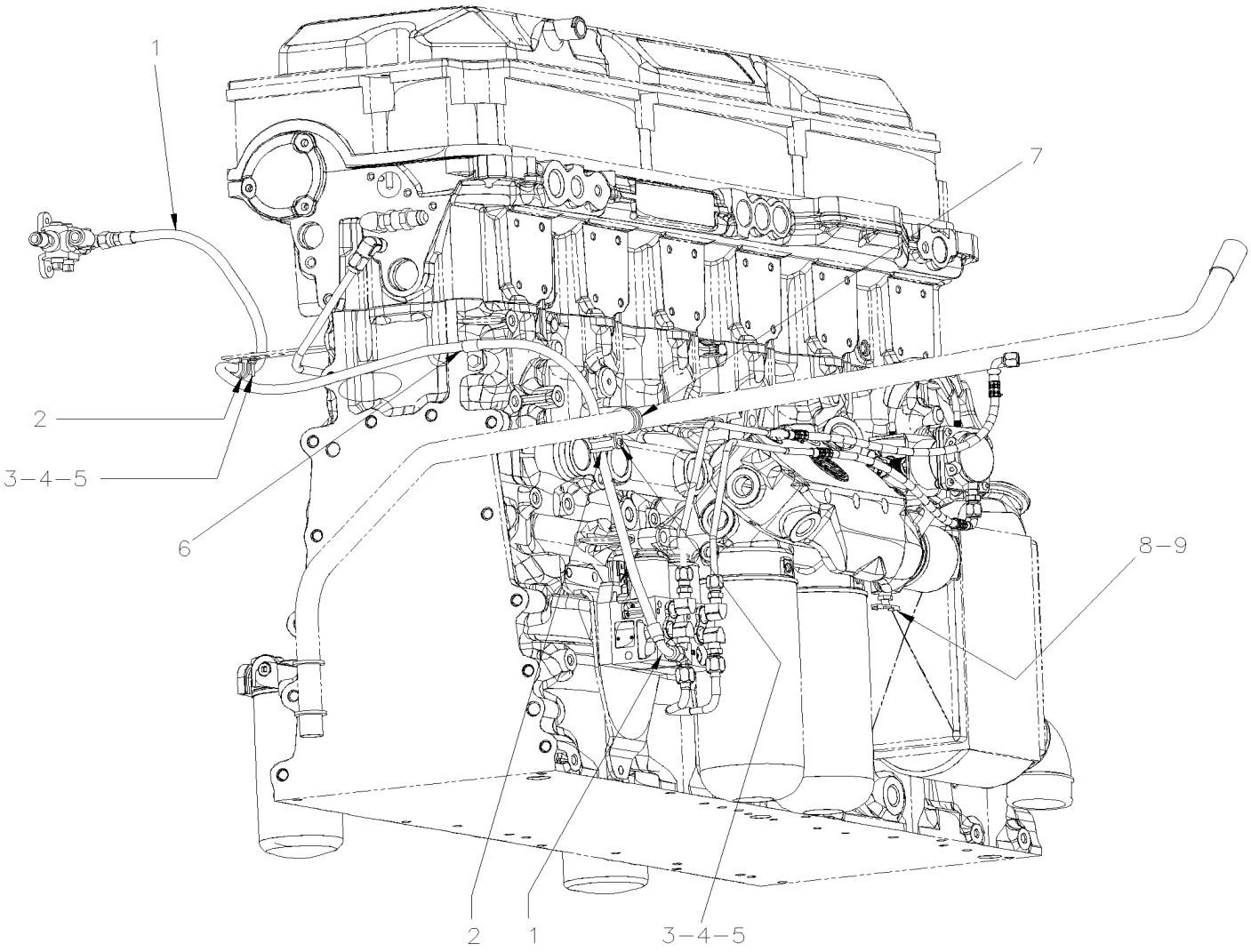

From 4-8165 To 8-9339		Date:07/2024	PAGE:Y2-0115-00

VPODS HOSE INSTALLATION

Item#	Part	Description	XLII 45	XLII MTH40	XLII MTH45	XLII MTH45E	NOTES
1	012245	HOSE ASSY TEFLON #6 1200MM	1				
1	012185	HOSE ASSY TEFLON #6 1600MM To 7-9095		1	1	1	
1	141720	HOSE ASSY TEFLON #6 1400MM From 7-9096		1	1	1	
2	952627	CLAMP / 1/2" I.D.	2	2	2	2	
3	502677	SCREW MA RND PH M4-0.7x25 SS	2	2	2	2	
4	500539	NUT HEX NYRT M4-0.7 N500	2	2	2	2	
5	500855	WASHER FL .188x.438x.049 N500	2	2	2	2	
6	952633	CLAMP / 7/8" I.D.	1	1	1	1	
7	504601	CLAMP / 5/16" I.D. x .375 HOLE	1	1	1	1	
8	501129	EXTERNAL SEAL DRAIN 1/4 NPT	1	1	1	1	
9	680098	THREAD SEALANT LOCTITE #567 / WHITE / 250ml	AR	AR	AR	AR	

From Y-7046 To 8-9339		Date:07/2024	PAGE:Y2-0116-00
STARTING AID - INSTALLATION			

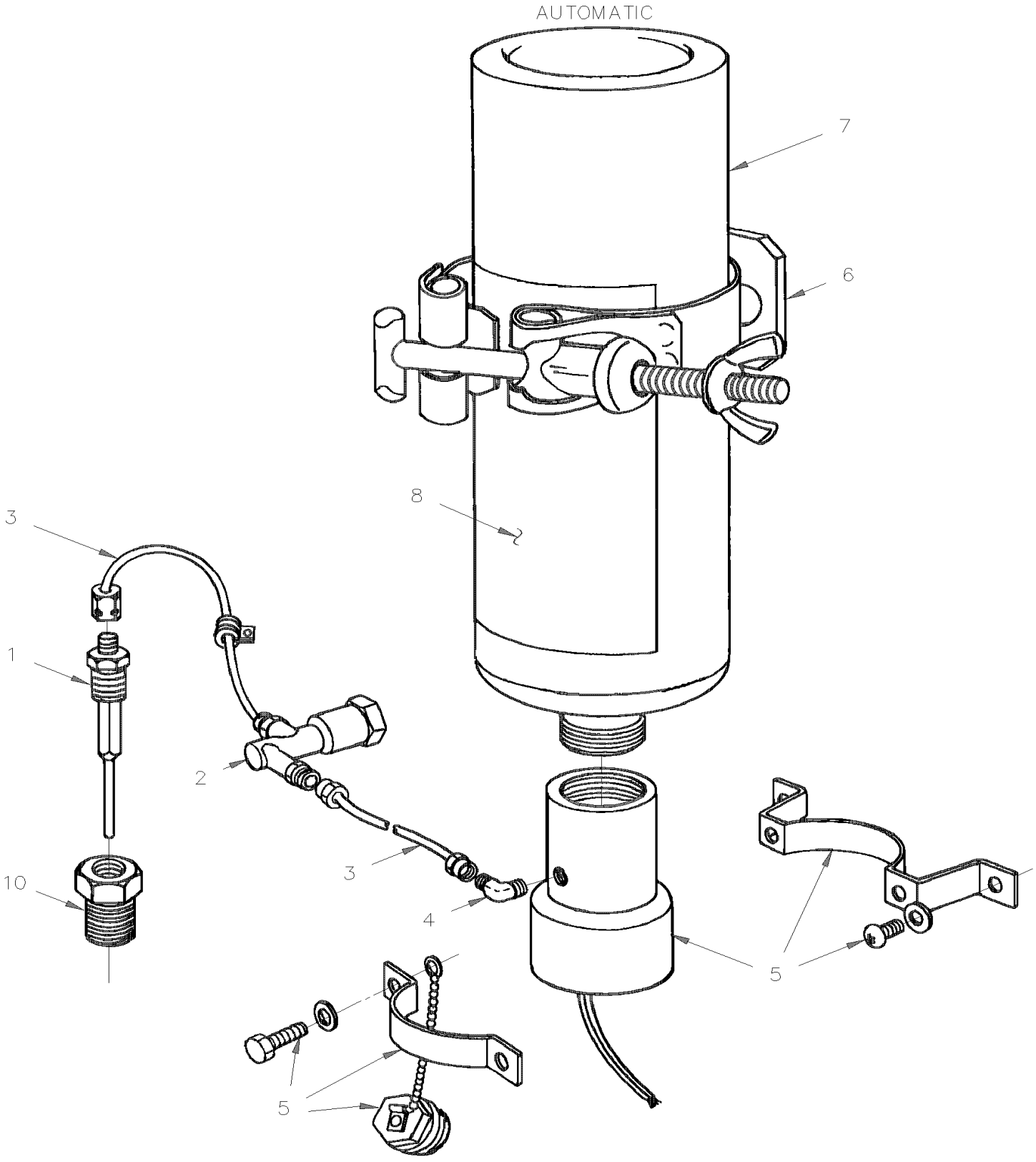

From Y-7046 To 8-9339		Date:07/2024	PAGE:Y2-0116-00

STARTING AID - INSTALLATION

Item#	Part	Description	XLII 45	XLII MTH40	XLII MTH45	XLII MTH45E	NOTES
1	510170	ATOMIZER	1	1	1	1	
2	510169	THERMACLOZ	1	1	1	1	
3	510168	TUBE PLASTIC	1	1	1	1	
4	510171	ELBOW 90°	1	1	1	1	
5	011338	VALVE ASSY W/CONNECTOR	1	1	1	1	
5	510167	. VALVE	1	1	1	1	
6	510166	CLAMP CYLINDER	1	1	1	1	
7	510173	CYLINDER DIESEL STARTING FUEL	1	1	1	1	
8	510172	DECAL	1	1	1	1	
NS	500165	SCREW CAP HEX 1/4-20x1 G5 Z050	2	2	2	2	
10	501534	BUSHING REDUCER / PIPE FITTING / 1/2NPT-Mx3/8NPT-F BR	1	1	1	1	
NS	032410	SUPPORT / RIVETED ON FRAME	1	1	1	1	
NS	562698	SWITCH / OFF-M/ON / D.P.S.T. / W/GREEN LED	1	1	1	1	
NS	562734	CAP / ETHER	1	1	1	1	
NS	061409	WIRING ASSY / REAR JCT BOX & VALVE	1	1	1	1	

From Y-7046 To 8-9339		Date:07/2024	PAGE:Y2-0120-00
DRIVE PULLEY & BELTS - BUS & MTH			

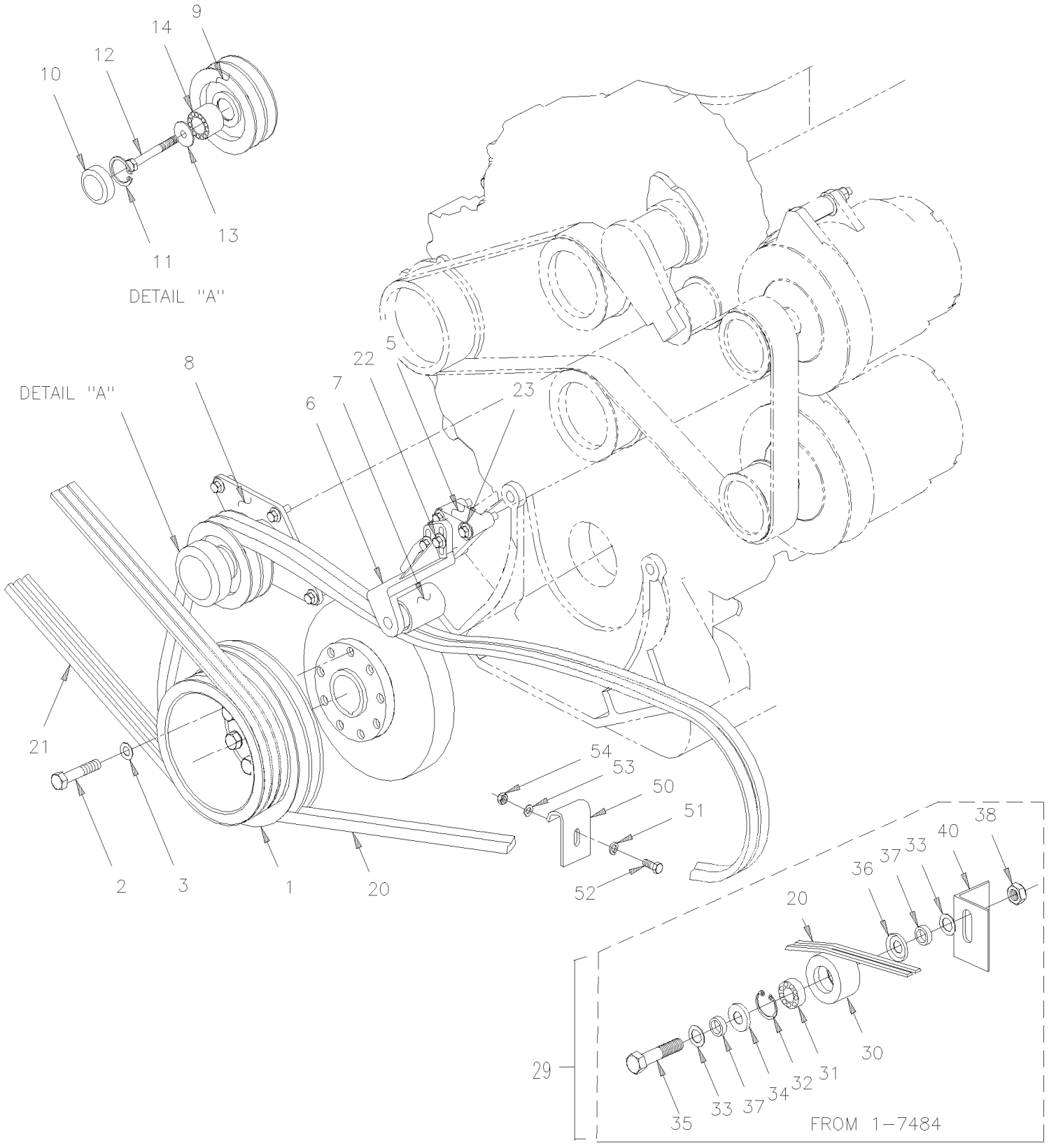

From Y-7046 To 8-9339		Date:07/2024	PAGE:Y2-0120-00

DRIVE PULLEY & BELTS - BUS & MTH

Item#	Part	Description	XLII 45	XLII MTH40	XLII MTH45	XLII MTH45E	NOTES
1	011584	PULLEY W/60 (2V X 11" O.D. + 3V X 8" O.D. / BOLTED ON HUB To 5-8412	1			1	
1	012267	PULLEY W/60 (2V X 11" O.D. + 3V X 8" O.D. BOL From 5-8413	1			1	
2	N.S.P.	BOLT 9/16-18 X 2"1/2 / (8929222)	9			9	2
3	N.S.P.	WASHER SPECIAL 9/16" / (5133981)	9			9	2
5	012064	ADAPTOR SNUBBER MOUNTING To 3-8164	1			1	
5	012191	ADAPTOR SNUBBER MOUNTING From 4-8165 To 5-8412	1			1	
5	012265	ADAPTOR SNUBBER MOUNTING From 5-8413 To 7-9226	1			1	
5	012455	ADAPTOR SNUBBER MOUNTING From 8-9251	1			1	
6	012063	SNUBBER ASSY To 5-8412	1			1	
6	012268	SNUBBER ASSY From 5-8413 To 8-9250	1			1	
6	012467	SNUBBER ASSY From 8-9251				1	
6		. SUPPORT To 8-9250	1			1	
6	012453	. SUPPORT From 8-9251	1			1	
7	N.S.P.	. ROLLER To 8-9250	1			1	2
7	012456	. ROLLER 48MM O.D. x 64MM From 8-9251	1			1	
7	N.S.P.	. BEARING To 8-9250	1			1	2
7	012458	. BEARING MODIFIED PREVOST From 8-9251	1			1	
7	5006768	. SCREW DRV RND #14x5/8 Z050	1			1	
8	012058	PULLEY ASSY IDLER To 3-8164	1			1	
8	012269	PULLEY ASSY IDLER From 4-8165 To 8-9250	1			1	
8	012466	PULLEY ASSY IDLER From 8-9251	1			1	
9	N.S.P.	. PULLEY To 8-9250	1			1	2
9	012459	. PULLEY 116MM O.D. x 53.5MM From 8-9251	1			1	
10	N.S.P.	. PROTECTOR CAP / (05107293) To 8-9250	1			1	2
10	510798	. PROTECTOR CAP / "PREVOST"	1			1	A
11	N.S.P.	. SNAP RING / (23518223) To 8-9250	1			1	2
11	504040	. RING RETAINER / INT 2.440 x 1.860 x 0.078 STL BLK From 8-9251	1			1	
12	5001308	. SCREW CAP HEXF M10-1.5x40 G10.9 N500 To 8-9250	1			1	
12	500829	. SCREW CAP HEX M10-1.5x40 G8.8 From 8-9251	1			1	
13	N.S.P.	. WASHER / (23518224)	1			1	2
13	012062	. WASHER FL 10.2 x38.1x5 ST	1			1	
14	510618	. BALL BEARING DBL ROW / 30MM x 62MM x 27 W	1			1	
14	507371	. SEAL From 8-9251	1			1	
20	506864	V-BELT / BX-100 / SET OF 2 9212-0404	1			1	
20	506681	V-BELT / BX-100 9013-2100 From 2-7908				1	B
21	506691	V-BELT / AX-73 9012-2073				3	
21	506691	V-BELT / AX-73 9012-2073 To 3-8164	3				
21	505522	V-BELT / AX-71 9012-2071 From 4-8165	3				
22	955297	SCREW CAP HEX M8-1.25x25 G8.8 ZG603	2			2	
23	975102	SCREW CAP HEXF M10-1.5x60 G10.9 PHC	3			3	
NS	453630	KIT, PULLEY ASSY W/ANGLE SUPPORT To 1-7483	1			1	
. NS	IS-96114A	. SEE INSTRUCTION SHEET To 1-7483	1			1	

From Y-7046 To 8-9339		Date:07/2024	PAGE:Y2-0120-00

DRIVE PULLEY & BELTS - BUS & MTH

Item#	Part	Description	XLII 45	XLII MTH40	XLII MTH45	XLII MTH45E	NOTES
29	454187	KIT, PULLEY ASSY W/ANGLE SUPPORT / SERIES "XL" From 1-7484	1			1	
30	052208	. PULLEY ASSY W/BEARING & SEAL / 43MM x 78MM From 1-7484	1			1	
30	052207	. . PULLEY BELT TENSIONER / 43MM x 78MM O.D. From 1-7484 To 5-8412	1			1	
30	052594	. . PULLEY BELT TENSIONER / 43MM x 78MM O.D. From 5-8413	1			1	
31	507340	. . BALL BEARING 20 ID x 52 OD x 22.2 W From 1-7484	1			1	
32	504095	. . RING RETAINER / INT 2.00 x 2.12 x .062 From 1-7484	1			1	
33	5001205	. . WASHER FL .875x1.375x.047 From 1-7484	AR			AR	
34	507361	. . SEAL From 1-7484	1			1	
35	5001124	. . SCREW CAP HEX M20-2.5x80 G8.8 ZP From 1-7484	1			1	
36	507360	. . SEAL From 1-7484	1			1	
37	051895	. . SPACER 20MM I.D. X 9MM TH From 1-7484	1			1	
37	052205	. . SPACER 20MM I.D. X 12.5MM TH From 1-7484	2			2	
38	500809	. . NUT HEX STO M20-2.5 N500 From 1-7484	1			1	
40	052393	. ANGLE SUPPORT / BOLTED TO ENGINE CRADLE To 1-7483	1			1	
40	454185	. ANGLE SUPPORT / BOLTED TO ENGINE CRADLE / SERIES "XL" From 1-7484	1			1	
40	011623	ANGLE SUPPORT / (WELDED TO ENGINE CRADLE)	1			1	
50	453077	BELT PROTECTOR To 1-7483	1			1	C
51	500445	WASHER FL .437x1.000x.083 Z050 To 1-7483	2			2	
52	502559	SCREW CAP HEX M10-1.5x25 G8.8 Z050 To 1-7483	1			1	
53	500257	WASHER LO SPT 10.2x18.1x2.2 Z050 To 1-7483	1			1	
54	500256	NUT HEX M10-1.5 Z050 To 1-7483	1			1	
		A) FIT ONLY WITH PULLEY "PREVOST"					
		B) "MOUNTED WITH " 2 BOSCH ALTERNATOR					
		C) FOR PRODUCT IMPROVEMENT USE KIT #453630 & SEE INSTRUCTION SHEET					
		2) NOT SOLD BY PREVOST (SEE MANUFACTURING PART NUMBER AT END OF DESCRIPTION LINE)					

From Y-7046 To 8-9339		Date:07/2024	PAGE:Y2-0120-50
DRIVE PULLEY & BELTS - MTH			

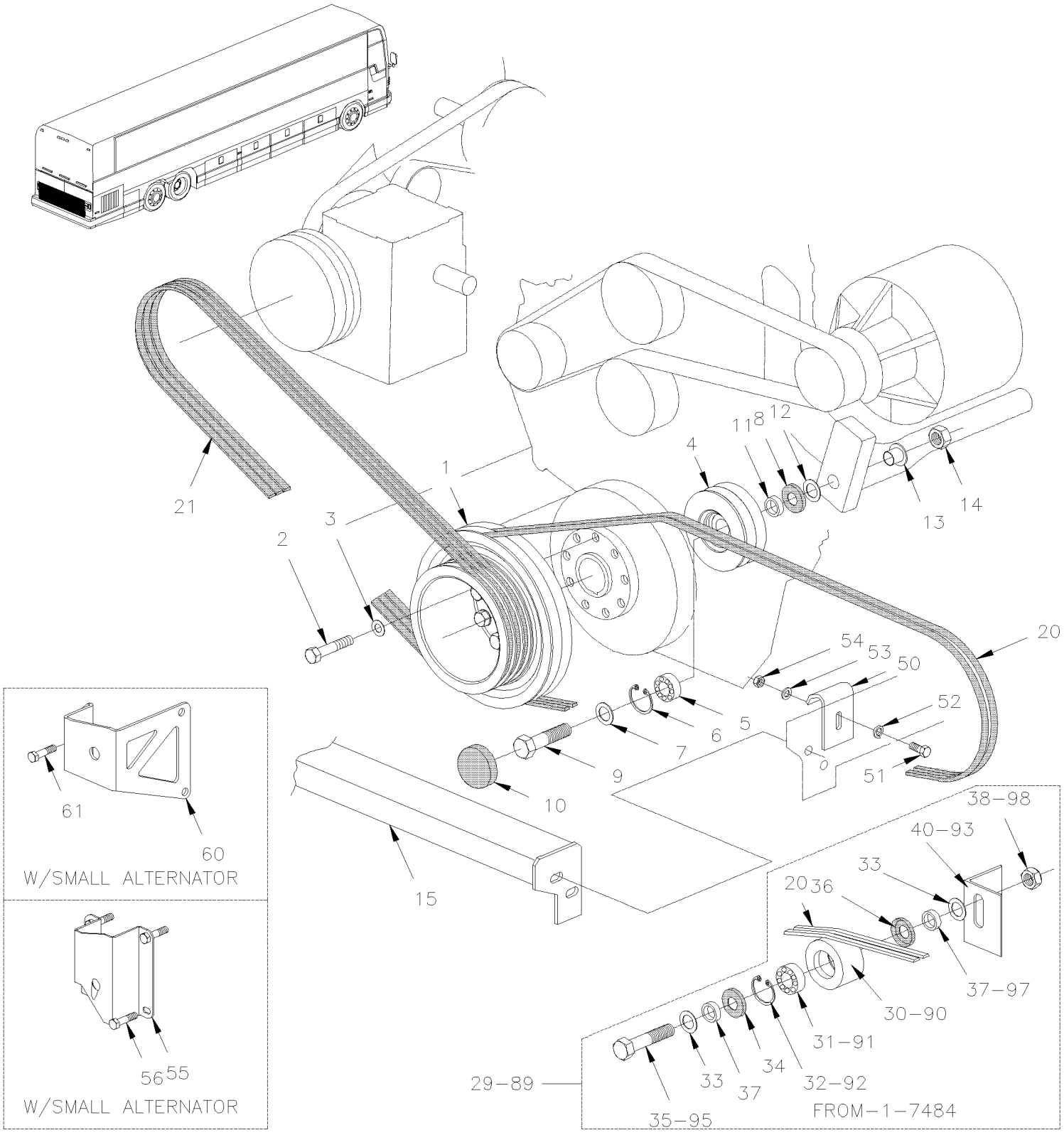

From Y-7046 To 8-9339		Date:07/2024	PAGE:Y2-0120-50

DRIVE PULLEY & BELTS - MTH

Item#	Part	Description	XLII 45	XLII MTH40	XLII MTH45	XLII MTH45E	NOTES
1	011584	PULLEY W/60 (2V X 11" O.D. + 3V X 8" O.D. / BOLTED ON HUB		1		1	
1	012267	PULLEY W/60 (2V X 11" O.D. + 3V X 8" O.D. BOL From 5-8413		1		1	
1	011584	PULLEY W/60 (2V X 11" O.D. + 3V X 8" O.D. / BOLTED ON HUB To 3-8164			1		
1	019206	PULLEY W/60 (2V X 11" O.D. + 3V X 8" O.D. From 4-8165 To 5-8412			1		
1	012266	PULLEY W/60 (2V X 11" O.D. + 3V X 8" O.D. From 5-8413			1		
2	N.S.P.	BOLT 9/16-18 X 2 1/2" / (8929222)		9	9	9	2
3	N.S.P.	WASHER SPECIAL 9/16" / (5133981)		9	9	9	2
4	453078	PULLEY ASSY W/BEARING & SEAL / 5" O.D. X 2V		1	1	1	
4	453075	. PULLEY / 5" O.D. X 2V To 5-8412		1	1	1	
4	454182	. PULLEY / 5" O.D. X 2V From 5-8413		1	1	1	
5	507340	. BALL BEARING 20 ID x 52 OD x 22.2 W		1	1	1	
6	504095	. RING RETAINER / INT 2.00 x 2.12 x .062		1	1	1	
7	502558	WASHER FL 21.0x37.0x3.0 G500		1	1	1	
8	507360	SEAL		1	1	1	
NS	680500	GREASE MERITOR / 400GR		1	1	1	
9	5001124	SCREW CAP HEX M20-2.5x80 G8.8 ZP		1	1	1	
10	453076	CAP, DUST		1	1	1	
11	052205	SPACER 20MM I.D. X 12.5MM TH		1	1	1	
12	5001205	WASHER FL .875x1.375x.047		AR	AR	AR	
13	452276	CENTERING BUSHING, FLANGE		1	1	1	
14	500809	NUT HEX STO M20-2.5 N500		1	1	1	
15	**Y2-0150-00**	**ENGINE CRADLE - WITH DETROIT S-60**					
20	506664	V-BELT / BX-97 / SET OF 2 9212-0390		2	2	2	
20	506864	V-BELT / BX-100 / SET OF 2 9212-0404		1	1	1	
21	506690	V-BELT / AX-74 9012-2074 To 3-8164		3	3	3	
21	509822	SUPER V-BELT / 3BX-77 From 4-8165			1		
21	506691	V-BELT / AX-73 9012-2073 From 4-8165		1		1	
NS	453630	KIT, PULLEY ASSY W/ANGLE SUPPORT To 1-7483		1	1	1	
. NS	IS-96114A	. SEE INSTRUCTION SHEET To 1-7483		1	1	1	
29	453709	KIT, PULLEY ASSY W/ANGLE SUPPORT From 1-7485 To 4-8320		1	1	1	
29	454187	KIT, PULLEY ASSY W/ANGLE SUPPORT / SERIES "XL" From 4-8321		1	1	1	
30	052208	. PULLEY ASSY W/BEARING & SEAL / 43MM x 78MM From 1-7484		1	1	1	
30	052207	. . PULLEY BELT TENSIONER / 43MM x 78MM O.D. From 1-7484 To 5-8412		1	1	1	
30	052594	. . PULLEY BELT TENSIONER / 43MM x 78MM O.D. From 5-8413		1	1	1	
31	507340	. . BALL BEARING 20 ID x 52 OD x 22.2 W From 1-7484		1	1	1	
32	504095	. . RING RETAINER / INT 2.00 x 2.12 x .062 From 1-7484		1	1	1	
33	5001205	. . WASHER FL .875x1.375x.047 From 1-7484		AR	AR	AR	
34	507361	. . SEAL From 1-7484		1	1	1	
35	5001124	. SCREW CAP HEX M20-2.5x80 G8.8 ZP From 1-7484		1	1	1	
36	507360	. SEAL From 1-7484		1	1	1	
37	051895	. SPACER 20MM I.D. X 9MM TH From 1-7484		1	1	1	
37	052205	. SPACER 20MM I.D. X 12.5MM TH From 1-7484		2	2	2	

From Y-7046 To 8-9339		Date:07/2024	PAGE:Y2-0120-50

DRIVE PULLEY & BELTS - MTH

Item#	Part	Description	XLII 45	XLII MTH40	XLII MTH45	XLII MTH45E	NOTES
38	500809	. NUT HEX STO M20-2.5 N500 From 1-7484		1	1	1	
40	052393	. ANGLE SUPPORT / BOLTED TO ENGINE CRADLE From 1-7484 To 4-8320		1	1	1	B
401	454185	. ANGLE SUPPORT / BOLTED TO ENGINE CRADLE / SERIES "XL" From 4-8321		1	1	1	C
50	453077	BELT PROTECTOR To 1-7483		1	1	1	A
51	502559	SCREW CAP HEX M10-1.5x25 G8.8 Z050 To 1-7483		1	1	1	
52	500445	WASHER FL .437x1.000x.083 Z050 To 1-7483		2	2	2	
53	500257	WASHER LO SPT 10.2x18.1x2.2 Z050 To 1-7483		1	1	1	
54	500256	NUT HEX M10-1.5 Z050 To 1-7483		1	1	1	
55	453307	SUPPORT IDLER PULLEY / STEEL / W/SMALL A/C		1	1	1	
56	500080	SCREW CAP HEX 7/16-20x4 1/2 G5 Z050		2	2	2	
60	453795	SUPPORT IDLER PULLEY / W/SMALL A/C		1	1	1	
61	502705	SCREW CAP HEX M12-1.75X25 G8.8 N500		2	2	2	
NS	500747	WASHER LO SPT 12.2x21.1x2.5 N500		2	2	2	
		A) FOR PRODUCT IMPROVEMENT USE KIT #453630 & SEE INSTRUCTION SHEET					
		B) INCLUDE IN KIT # 453709					
		C) INCLUDE IN KIT # 454187					
		2) NOT SOLD BY PREVOST (SEE MANUFACTURING PART NUMBER AT END OF DESCRIPTION LINE)					

From Y-7046 To 3-8164		Date:07/2024	PAGE:Y2-0125-00
BELTS TENSIONERS - WITH DETROIT S-60			

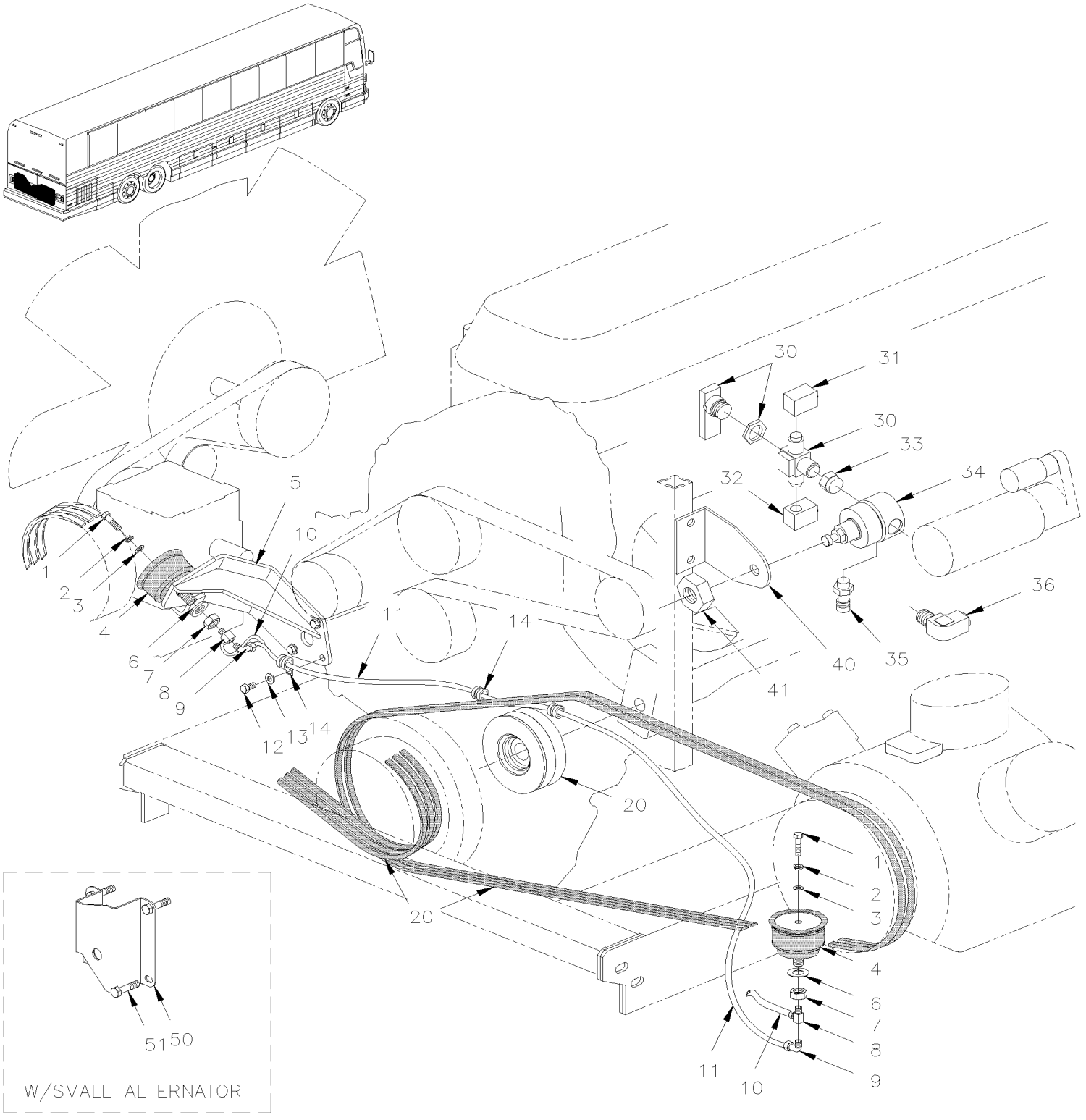

From Y-7046 To 3-8164		Date:07/2024	PAGE:Y2-0125-00

BELTS TENSIONERS - WITH DETROIT S-60

Item#	Part	Description	XLII 45	XLII MTH40	XLII MTH45	XLII MTH45E	NOTES
1	500179	SCREW CAP HEX 5/16-18x3/4 G5 Z050	2	2	2	2	
2	500482	WASHER LO SPT .506x.873x.125 Z050	2	2	2	2	
3	500441	WASHER FL .312x.734x.065 Z050	2	2	2	2	
4	950208	BELLOW ASSY / BELT TENSIONER / 3" O.D.	1	1	1	1	
. NS	504695	. HOSE CLAMP STEPLESS SPRING SS / OETIKER / 2.9-3.3	1	1	1	1	
5	052050	SUPPORT BELLOW TENTIONER To 2-7809	1	1	1	1	
5	059055	SUPPORT BELLOW TENSIONER From 2-7810	1	1	1	1	
6	5001150	WASHER FL 17.0x30.0x3.0 N500	2	2	2	2	
7	500792	NUT HEX 5/8-11 Z050	1	1	1	1	
8	501707	ADAPTER TEE / SAE 45º FITTING / #4FL-Mx1/8NPT-Mx1/8NPT-F BR	1	1	1	1	
9	640996	MALE ELBOW 90º / NTA FITTING / #4x1/8NPT-M BR	1	1	1	1	
9	641127	MALE ELBOW 45º / NTA FITTING / #4x1/8NPT-M BR	2	2	2	2	
10	503402	TUBE, NYLON 1/4 O.D. / BLACK S.L.	AR	AR	AR	AR	
11	052317	HOSE ASSY TEFLON #4 1217MM	1				
11	052041	HOSE ASSY TEFLON #4 1230MM		1	1	1	
11	142080	HOSE ASSY TEFLON #4 1990MM		1	1	1	A
12	500069	SCREW CAP HEX M8-1.25x16 G10.9 DP	3	3	3	3	
13	500874	WASHER FL 8.4x17.0x1.6 Z050	3	3	3	3	
14	504601	CLAMP / 5/16" I.D. x .375 HOLE	3	3	3	3	
20	**Y2-0120-00**	**DRIVE PULLEY & BELTS - BUS & MTH**					
20	**Y2-0120-50**	**DRIVE PULLEY & BELTS - MTH**					
30	641417	VALVE, 3 WAYS 1/8NPT-Fx1/8NPT-Fx1/8NPT-F BR	1	1	1	1	
. NS	642014	. HANDLE / RED	1	1	1	1	
30	642161	VALVE, 3 WAYS 1/8NPT-Fx1/8NPT-Fx1/8NPT-F BR / SERVICE	1	1	1	1	
. NS	642014	. HANDLE / RED	1	1	1	1	
31	641369	MALE ELBOW 90° NON-SWIVEL / PUSH-IN FITTING / #4x1/8NPT-M BR	1	1	1	1	
32	501331	STREET ELBOW 90º / PIPE FITTING / 1/8NPT-Mx1/8NPT-F BR	1	1	1	1	
33	501650	NIPPLE REDUCER HEX / PIPE FITTING / 1/4NPT-Mx1/8NPT-Mx1 3/16 BR	2	2	2	2	
34	641472	AIR PRESSURE REGULATOR 1/4" NPT / COPPER	1	1	1	1	
35	640488	VALVE, AIR FILL 1/8" NPT	1	1	1	1	
. NS	650164	. CAP VALVE / CHROME	1	1	1	1	
36	641371	MALE ELBOW 90° NON-SWIVEL / PUSH-IN FITTING / #4x1/4NPT-M BR	1	1	1	1	
36	501037	MALE ELBOW 90º / SAE 45º FITTING / #4FL-Mx1/4NPT-M BR		1	1	1	A
40	142065	SUPPORT AIR REGULATOR To 2-7888	1	1	1	1	
40	142454	SUPPORT AIR REGULATOR / FLAT STYLE From 2-7889	1	1	1	1	
41	500734	NUT HEX JAM 3/4-16 Z050	1	1	1	1	
50	453307	SUPPORT IDLER PULLEY / STEEL / W/SMALL A/C		1	1	1	
NS	452280	SPACER / SUPPORT & ENGINE		AR	AR	AR	
51	500080	SCREW CAP HEX 7/16-20x4 1/2 G5 Z050		2	2	2	
NS	500480	WASHER LO SPT .443x.779x.109 Z050		2	2	2	
NS	500445	WASHER FL .437x1.000x.083 Z050		2	2	2	
NS	500709	NUT HEX 7/16-20 Z050		2	2	2	

From Y-7046 To 3-8164		Date:07/2024	PAGE:Y2-0125-00

BELTS TENSIONERS - WITH DETROIT S-60

Item#	Part	Description	XLII 45	XLII MTH40	XLII MTH45	XLII MTH45E	NOTES
NS	011894	DECAL "BELT TENSIONER"	1	1	1	1	
		A) W/ SMALL A/C SYSTEM					

From 4-8165 To 8-9339		Date:07/2024	PAGE:Y2-0125-01
BELTS TENSIONERS - WITH DETROIT S-60			

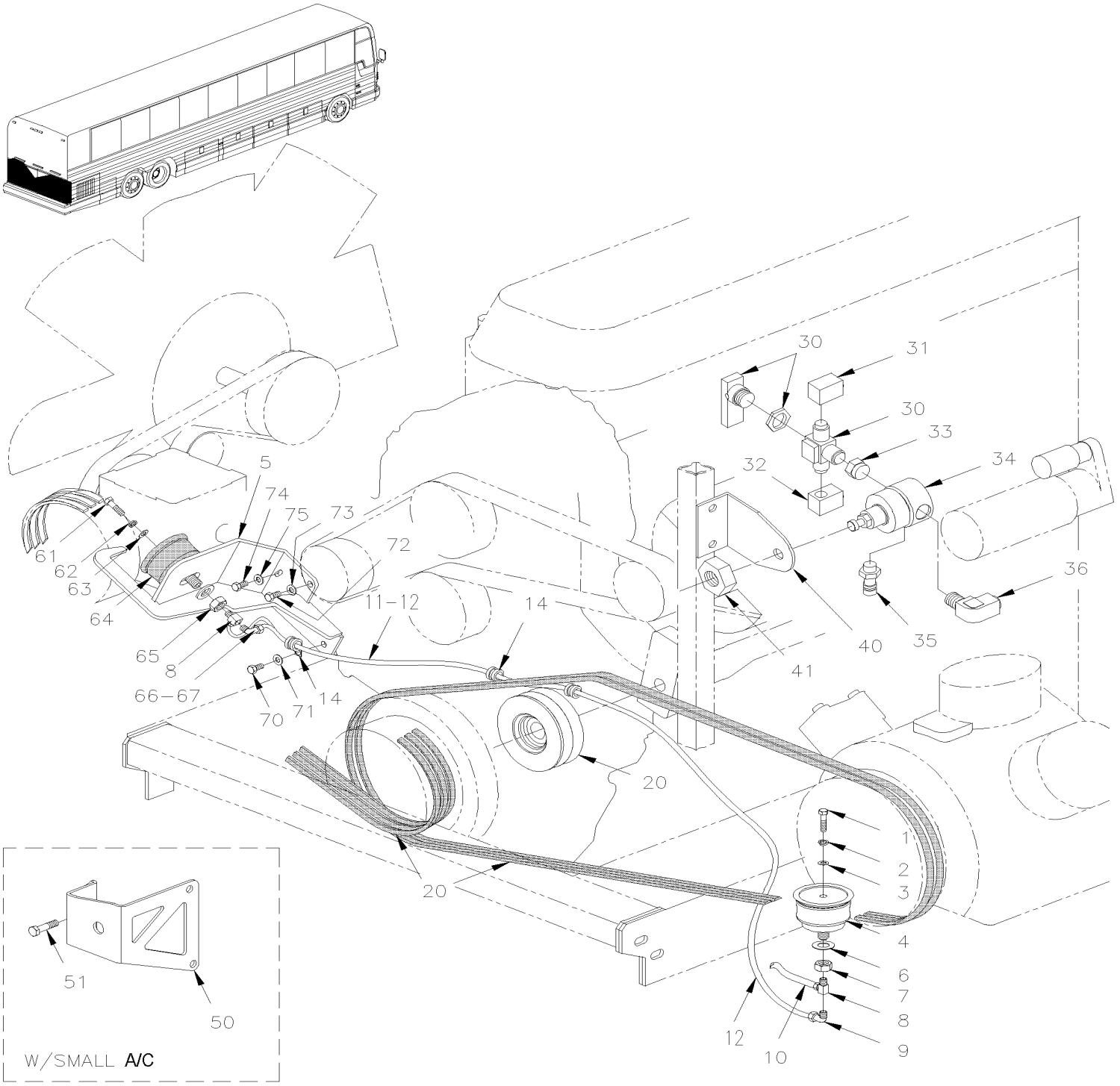

From 4-8165 To 8-9339		Date:07/2024	PAGE:Y2-0125-01
BELTS TENSIONERS - WITH DETROIT S-60			

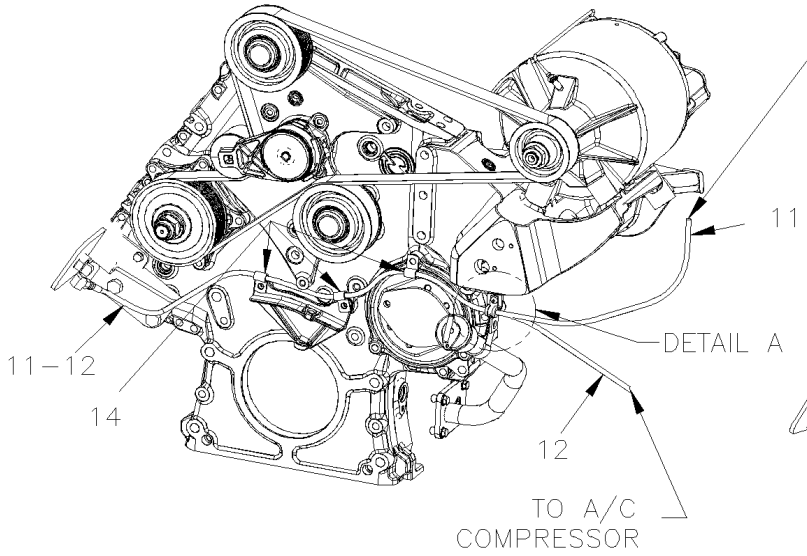

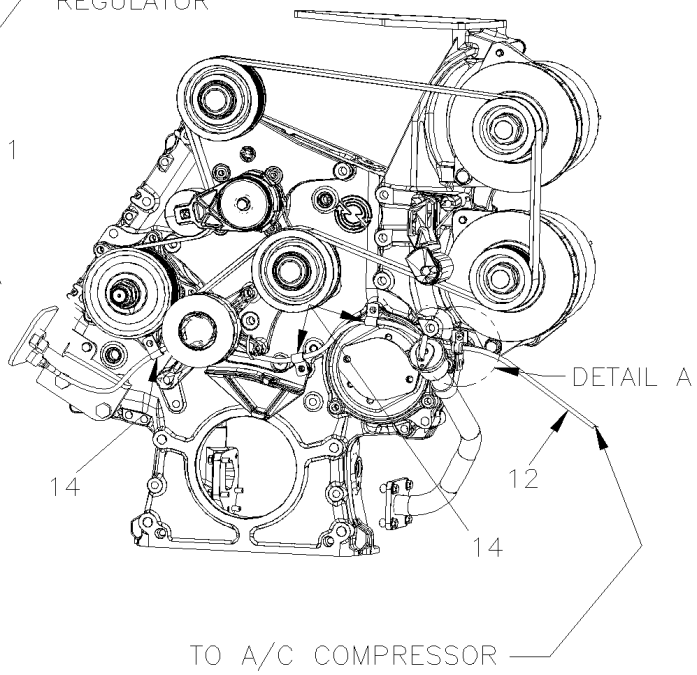

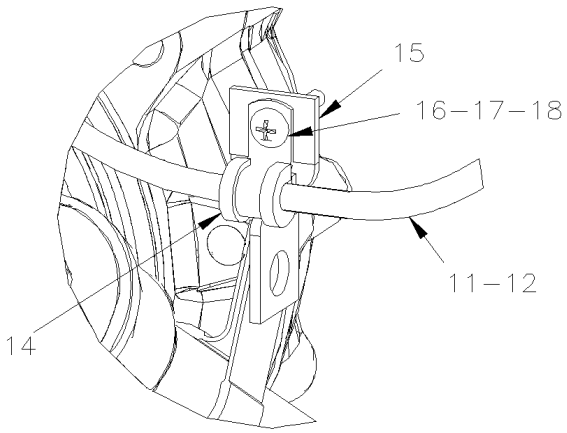

DETAIL A

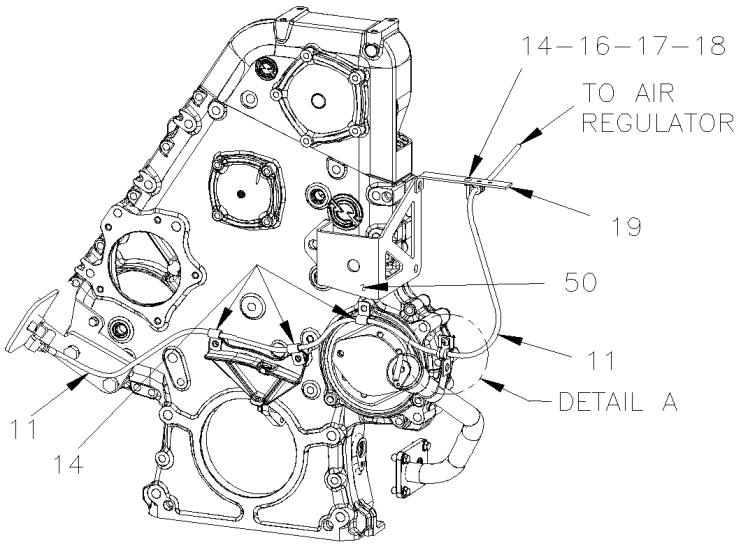

From 4-8165 To 8-9339		Date:07/2024	PAGE:Y2-0125-01

BELTS TENSIONERS - WITH DETROIT S-60

Item#	Part	Description	XLII 45	XLII MTH40	XLII MTH45	XLII MTH45E	NOTES
1	500836	SCREW CAP HEX 5/16-18x3/4 G5 N500 To 5-8392	2	2		2	
1	500836	SCREW CAP HEX 5/16-18x3/4 G5 N500 To 5-8392			1		
1	502916	SCREW CAP HEX 3/8-16x3/4 G8 N500 From 5-8393			1		
2	500942	WASHER LO SPT 8.1x14.8x2.0 N500 To 5-8392	2	2		2	
2	500942	WASHER LO SPT 8.1x14.8x2.0 N500 To 5-8392			1		
2	500218	WASHER LO SPT .380x.683x.098 DP320 From 5-8393			1		
3	3852162	WASHER FL .312x.734x.065 ZG603 To 5-8392	2	2		2	
3	3852162	WASHER FL .312x.734x.065 ZG603 To 5-8392			1		
3	500832	WASHER FL .406x.812x.065 N500 From 5-8393			1		
4	950208	BELLOW ASSY / BELT TENSIONER / 3" O.D. To 5-8392	1	1	1	1	
. NS	504695	. HOSE CLAMP STEPLESS SPRING SS / OETIKER / 2.9-3.3 To 5-8392	1	1	1	1	
4	550840	BELLOW ASSY / BELT TENSIONER / 4" O.D. From 5-8393	1	1	1	1	
5	052488	SUPPORT BELLOW TENTIONER To 5-8440			1		F
. NS	WB04-05C	. SEE WARRANTY BULLETIN To 5-8440			1		F
5	052240	SUPPORT BELLOW TENTIONER From 5-8441 To 5-8489			1		F
. NS	WB04-05C	. SEE WARRANTY BULLETIN From 5-8441 To 5-8489			1		F
5	053441	SUPPORT BELLOW TENTIONER From 5-8490 To 6-8878			1		F
. NS	WB04-05C	. SEE WARRANTY BULLETIN From 5-8490 To 6-8878			1		F
5	052707	SUPPORT BELLOW TENTIONER From 6-8879			1		
5	052491	SUPPORT BELLOW TENSIONER / W/3" BELLOW To 5-8392	1	1		1	
5	052589	SUPPORT BELLOW TENSIONER / W/4" BELLOW From 5-8393 To 5-8622	1				D
. NS	WB04-05C	. SEE WARRANTY BULLETIN From 5-8393 To 5-8622	1				D
5	052641	SUPPORT BELLOW TENSIONER / W/4" BELLOW From 5-8623 To 6-8878	1				D
. NS	WB04-05C	. SEE WARRANTY BULLETIN From 5-8623 To 6-8878	1				D
5	052708	SUPPORT BELLOW TENTIONER / W/4" BELLOW From 6-8879	1				
5	052607	SUPPORT BELLOW TENSIONER / W/4" BELLOW From 5-8393 To 5-8622		1		1	
. NS	WB04-05C	. SEE WARRANTY BULLETIN From 5-8393 To 5-8622		1		1	
5	052646	SUPPORT BELLOW TENSIONER / W/4" BELLOW From 5-8623 To 6-8878		1		1	E
5	052706	SUPPORT BELLOW TENTIONER / W/4" BELLOW From 6-8879				1	
6	5001150	WASHER FL 17.0x30.0x3.0 N500	2	2		2	
6	5001150	WASHER FL 17.0x30.0x3.0 N500			1		
7	500792	NUT HEX 5/8-11 Z050	1	1	1	1	
8	501707	ADAPTER TEE / SAE 45º FITTING / #4FL-Mx1/8NPT-Mx1/8NPT-F BR	1	1	1	1	
9	640996	MALE ELBOW 90º / NTA FITTING / #4x1/8NPT-M BR	1	1	1	1	
9	641127	MALE ELBOW 45º / NTA FITTING / #4x1/8NPT-M BR	2	2	2	2	
10	503402	TUBE, NYLON 1/4 O.D. / BLACK S.L.	AR	AR	AR	AR	
11	142080	HOSE ASSY TEFLON #4 1990MM		1	1	1	
12	052317	HOSE ASSY TEFLON #4 1217MM To 5-8392	1				
12	052041	HOSE ASSY TEFLON #4 1230MM To 5-8392		1	1	1	
12	052570	HOSE ASSY TEFLON #4 1750MM From 5-8373	1	1	1	1	
NS	012245	HOSE ASSY TEFLON #6 1200MM To 7-9095	1	1		1	B
NS	012185	HOSE ASSY TEFLON #6 1600MM From 7-9096			1		B

From 4-8165 To 8-9339		Date:07/2024	PAGE:Y2-0125-01

BELTS TENSIONERS - WITH DETROIT S-60

Item#	Part	Description	XLII 45	XLII MTH40	XLII MTH45	XLII MTH45E	NOTES
12	141720	HOSE ASSY TEFLON #6 1400MM From 7-9096			1	1	
14	952624	CLAMP / 1/4" I.D.	4	4	4	4	
15	061129	SUPPORT FLAT TWISTED / TUBE DIPSTICK	1	1	1	1	
16	500574	SCREW MA TR PH #10-24x1 1/4 SS	AR	AR	AR	AR	
17	500914	WASHER LO SPT .193x.334x.047 N500	AR	AR	AR	AR	
18	502882	NUT HEX #10-24 N500	AR	AR	AR	AR	
19	010667	SUPPORT		1	1	1	
20	**Y2-0120-00**	**DRIVE PULLEY & BELTS - BUS & MTH**					
20	**Y2-0120-50**	**DRIVE PULLEY & BELTS - MTH**					
30	641417	VALVE, 3 WAYS 1/8NPT-Fx1/8NPT-Fx1/8NPT-F BR	1	1	1	1	
. NS	642014	. HANDLE / RED	1	1	1	1	
30	642161	VALVE, 3 WAYS 1/8NPT-Fx1/8NPT-Fx1/8NPT-F BR / SERVICE	1	1	1	1	
. NS	642014	. HANDLE / RED	1	1	1	1	
31	641369	MALE ELBOW 90° NON-SWIVEL / PUSH-IN FITTING / #4x1/8NPT-M BR	1	1	1	1	
32	501331	STREET ELBOW 90º / PIPE FITTING / 1/8NPT-Mx1/8NPT-F BR	1	1	1	1	
33	501650	NIPPLE REDUCER HEX / PIPE FITTING / 1/4NPT-Mx1/8NPT-Mx1 3/16 BR	2	2	2	2	
34	641472	AIR PRESSURE REGULATOR 1/4" NPT / COPPER	1	1	1	1	
34	012222	DECAL "BELT TENSIONER" 45 PSI			1		
34	012247	DECAL "BELT TENSIONER" 50 PSI To 5-8392	1	1		1	
34	012123	DECAL "BELT TENSIONER" 35 PSI From 5-8393	1	1		1	
35	640488	VALVE, AIR FILL 1/8" NPT	1	1	1	1	
. NS	650164	. CAP VALVE / CHROME	1	1	1	1	
36	641371	MALE ELBOW 90° NON-SWIVEL / PUSH-IN FITTING / #4x1/4NPT-M BR	1	1	1	1	
36	501037	MALE ELBOW 90º / SAE 45º FITTING / #4FL-Mx1/4NPT-M BR		1	1	1	A
40	142454	SUPPORT AIR REGULATOR / FLAT STYLE	1	1	1	1	
41	500734	NUT HEX JAM 3/4-16 Z050	1	1	1	1	
50	453795	SUPPORT IDLER PULLEY / W/SMALL A/C		1	1	1	
51	502705	SCREW CAP HEX M12-1.75X25 G8.8 N500		2	2	2	
NS	500747	WASHER LO SPT 12.2x21.1x2.5 N500		2	2	2	
61	502916	SCREW CAP HEX 3/8-16x3/4 G8 N500			1		
61	500836	SCREW CAP HEX 5/16-18x3/4 G5 N500 To 5-8392	1	1		1	
61	502916	SCREW CAP HEX 3/8-16x3/4 G8 N500 From 5-8393	1	1		1	
62	500218	WASHER LO SPT .380x.683x.098 DP320			1		
62	500942	WASHER LO SPT 8.1x14.8x2.0 N500 To 5-8392	1	1		1	
62	500218	WASHER LO SPT .380x.683x.098 DP320 From 5-8393	1	1		1	
63	500832	WASHER FL .406x.812x.065 N500			1		
63	3852162	WASHER FL .312x.734x.065 ZG603 To 5-8392	1	1		1	
63	500832	WASHER FL .406x.812x.065 N500 From 5-8393	1	1		1	
64	550840	BELLOW ASSY / BELT TENSIONER / 4" O.D.			1		
64	950208	BELLOW ASSY / BELT TENSIONER / 3" O.D. To 5-8392	1	1		1	
. NS	504695	. HOSE CLAMP STEPLESS SPRING SS / OETIKER / 2.9-3.3 To 5-8392	1	1		1	
64	550840	BELLOW ASSY / BELT TENSIONER / 4" O.D. From 5-8393	1	1		1	

From 4-8165 To 8-9339		Date:07/2024	PAGE:Y2-0125-01

BELTS TENSIONERS - WITH DETROIT S-60

Item#	Part	Description	XLII 45	XLII MTH40	XLII MTH45	XLII MTH45E	NOTES
65	502917	NUT HEX JAM 3/4-16 G2 N500			1		
65	500792	NUT HEX 5/8-11 Z050 To 5-8392	1	1		1	
65	502917	NUT HEX JAM 3/4-16 G2 N500 From 5-8393	1	1		1	
66	501036	MALE ELBOW 90º / SAE 45º FITTING / #4FL-Mx1/8NPT-M BR			1		
67	031054	HOSE ASSY TEFLON #4 770MM To 5-8392			1		
67	052535	HOSE ASSY TEFLON #4 662MM To 5-8392		1		1	
67	052590	HOSE ASSY TEFLON #4 830MM From 5-8393		1	1	1	
70	502914	SCREW CAP HEX M12-1.75x60 G8.8 N500	1	1	1	1	
71	500944	WASHER LO SPT .506x.873x.125 N500	2	2	2	2	
72	500820	SCREW CAP HEX M8-1.25x16 G10.9 N500	1	1	1	1	
73	500942	WASHER LO SPT 8.1x14.8x2.0 N500	1	1	1	1	
74	970978	SCREW CAP HEX M12-1.75x70 G8.8 ZG603	1	1	1	1	
75	500211	WASHER FL .531x1.250x.125 N500	1	1	1	1	
NS	052646	SUPPORT BELLOW TENSIONER / W/4" BELLOW				1	
		A) W/ SMALL A/C SYSTEM					
		B) FROM REAR MANIFOLD TO VPOD ON ENGINE STREET SIDE					
		D) FOR PRODUCT IMPROVEMENT, ASK PART #052708 AND SEE WARRANTY BULLETIN WB05-03B					
		E) FOR PRODUCT IMPROVEMENT, ASK PART #052706 AND SEE WARRANTY BULLETIN WB05-03B					
		F) FOR PRODUCT IMPROVEMENT, ASK PART #052707 AND SEE WARRANTY BULLETIN WB04-05B					

From Y-7046 To 4-8345		Date:07/2024	PAGE:Y2-0150-00
ENGINE CRADLE - WITH DETROIT S-60			

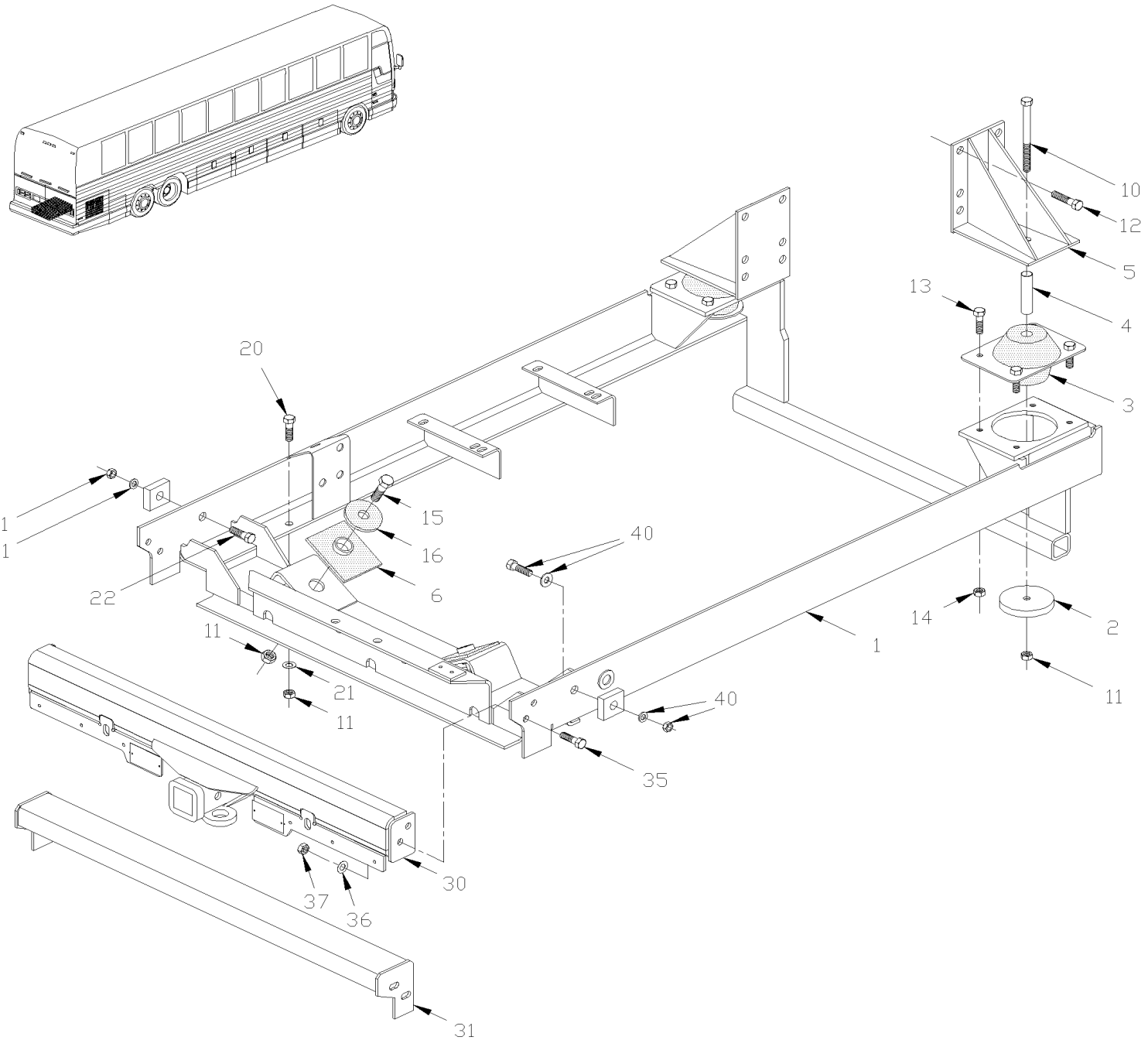

From Y-7046 To 4-8345		Date:07/2024	PAGE:Y2-0150-00

ENGINE CRADLE - WITH DETROIT S-60

Item#	Part	Description	XLII 45	XLII MTH40	XLII MTH45	XLII MTH45E	NOTES
1	012029P	CRADLE ASSY / WTRAILER HITCH	1	1	1	1	
1	015994	. ENGINE CRADLE FIXING /	1	1	1	1	
2	011662	WASHER, INSULATOR / R.H. & L.H.	2	2	2	2	
3	510456	INSULATOR, RUBBER	2	2	2	2	
4	011629	SPACER BUSHING	2	2	2	2	
5	011585	SUPPORT, L.H.	1	1	1	1	
5	011585	SUPPORT, L.H.	1				
5	011785	SUPPORT, L.H. / W/S-50 & AUTOMATIC TRANSMISSION	1				
5	011586	SUPPORT, R.H. / W/S-60	1	1	1	1	
5	011772	SUPPORT, R.H. / W/S-50 & MANUAL TRANSMISSION	1				
5	011790	SUPPORT, R.H. / W/S-50 & AUTOMATIC TRANSMISSION	1				
6	510484	INSULATOR, RUBBER MOUNT SQUARE To 3-8007	2	2	2	2	
6	510427	INSULATOR, RUBBER MOUNT SQUARE From 3-3008	2	2	2	2	
10	5001051	SCREW CAP HEX M16-2.0x160 G8.8 Z050	2	2	2	2	
11	500781	NUT HEX STO M16-2.0 DP	2	2	2	2	
12	500817	SCREW CAP HEX 5/8-11x1 3/4 G5 Z050	12				
12	502544	SCREW CAP HEX M16-2.0x40 G8.8 Z050	12	12	12	12	
13	502549	SCREW CAP HEX M10-1.5x35 G8.8 Z050	8	8	8	8	
14	500680	NUT HEX STO M10-1.5 Z050	AR	AR	AR	AR	
NS	502644	WASHER FL 10.5x30.0x2.5 Z050	8	8	8	8	
15	502545	SCREW CAP HEX M16-2.0x80 G8.8 Z050	2	2	2	2	
16	510428	INSULATOR, RUBBER MOUNT ROUND	2	2	2	2	
16	012153	SPACER SHIM 1/8" From 1-7713		AR	AR	AR	D
16	012154	SPACER SHIM 1/16" From 1-7713		AR	AR	AR	D
20	502544	SCREW CAP HEX M16-2.0x40 G8.8 Z050	2	2	2	2	
21	500846	WASHER FL 17.0x50.0x3.0 Z050	6	6	6	6	
22	500776	SCREW CAP HEX M16-2.0x110 G8.8 Z050	2	2	2	2	
30	410732	PROTECTOR ASSY / W/TRAILER HITCH To Y-7278		1	1	1	A
30	410778	PROTECTOR ASSY / W/TRAILER HITCH From Y-7279		1	1	1	E
31	410733	PROTECTOR ASSY To Y-7278	1	1		1	
31	410807	PROTECTOR ASSY From Y-7279	1	1		1	
35	502731	SCREW CAP HEX M12-1.75x40 G8.8 Z050	4	4	4	4	
35	502544	SCREW CAP HEX M16-2.0x40 G8.8 Z050		4	4	4	
36	500446	WASHER FL .531x1.250x.125 Z050	4	4	4	4	
36	5001150	WASHER FL 17.0x30.0x3.0 N500		4	4	4	
37	500811	NUT HEX STO M12-1.75 G500	4	4	4	4	
37	500781	NUT HEX STO M16-2.0 DP		4	4	4	
40	**Y2-0120-00**	**DRIVE PULLEY & BELTS - BUS & MTH**					
40	**Y2-0120-50**	**DRIVE PULLEY & BELTS - MTH**					
		FOR RETROFIT A 10000LBS TRAILER HITCH					
		YOU NEED NEXT FOLLOWING ITEMS					

From Y-7046 To 4-8345		Date:07/2024	PAGE:Y2-0150-00

ENGINE CRADLE - WITH DETROIT S-60

Item#	Part	Description	XLII 45	XLII MTH40	XLII MTH45	XLII MTH45E	NOTES
NS	500446	WASHER FL .531x1.250x.125 Z050		4	4	4	
NS	500781	NUT HEX STO M16-2.0 DP		4	4	4	
NS	500811	NUT HEX STO M12-1.75 G500		4	4	4	
NS	502731	SCREW CAP HEX M12-1.75x40 G8.8 Z050		4	4	4	
NS	502744	NUT HEX STO M8-1.25 Z050		4	4	4	
NS	910006	NAME PLATE "CERTIFICATION HITCH PLATE"		1	1	1	A
NS	502627	SCREW DRV RND #2x1/4 ZP		2	2	2	
NS	211484	SPACER / EACH SIDE OF ENGINE CRADLE		2	2	2	B
NS	410575	ANGLE / TRAILER HITCH SUPPORT		1	1	1	B
NS	410804	KIT TRAILER HITCH / UPGRADE TO 20000LBS		AR		AR	
. NS	IS-99092A	. SEE INSTRUCTION SHEET		1		1	
NS	410805	KIT TRAILER HITCH / UPGRADE TO 20000LBS			AR		
. NS	IS-99092A	. SEE INSTRUCTION SHEET			1		
NS	012155	KIT, SPACER FOR ENGINE MOUNT	AR	AR	AR	AR	
. NS	IS-01108	. SEE INSTRUCTION SHEET	1	1	1	1	
		A) 10,000 LBS CERTIFIED					
		B) THIS ITEM NEED TO BE WELDED AT THE ENGINE CRADLE 10000LBS					
		D) FOR PRODUCT IMPROVEMENT UP TO SN 1-7712 ASK FOR KIT #012155					
		E) REQUIRE ENGINE CRADLE # 012029P					

From 4-8346 To 8-9339		Date:07/2024	PAGE:Y2-0150-01
ENGINE CRADLE - WITH DETROIT S-60			

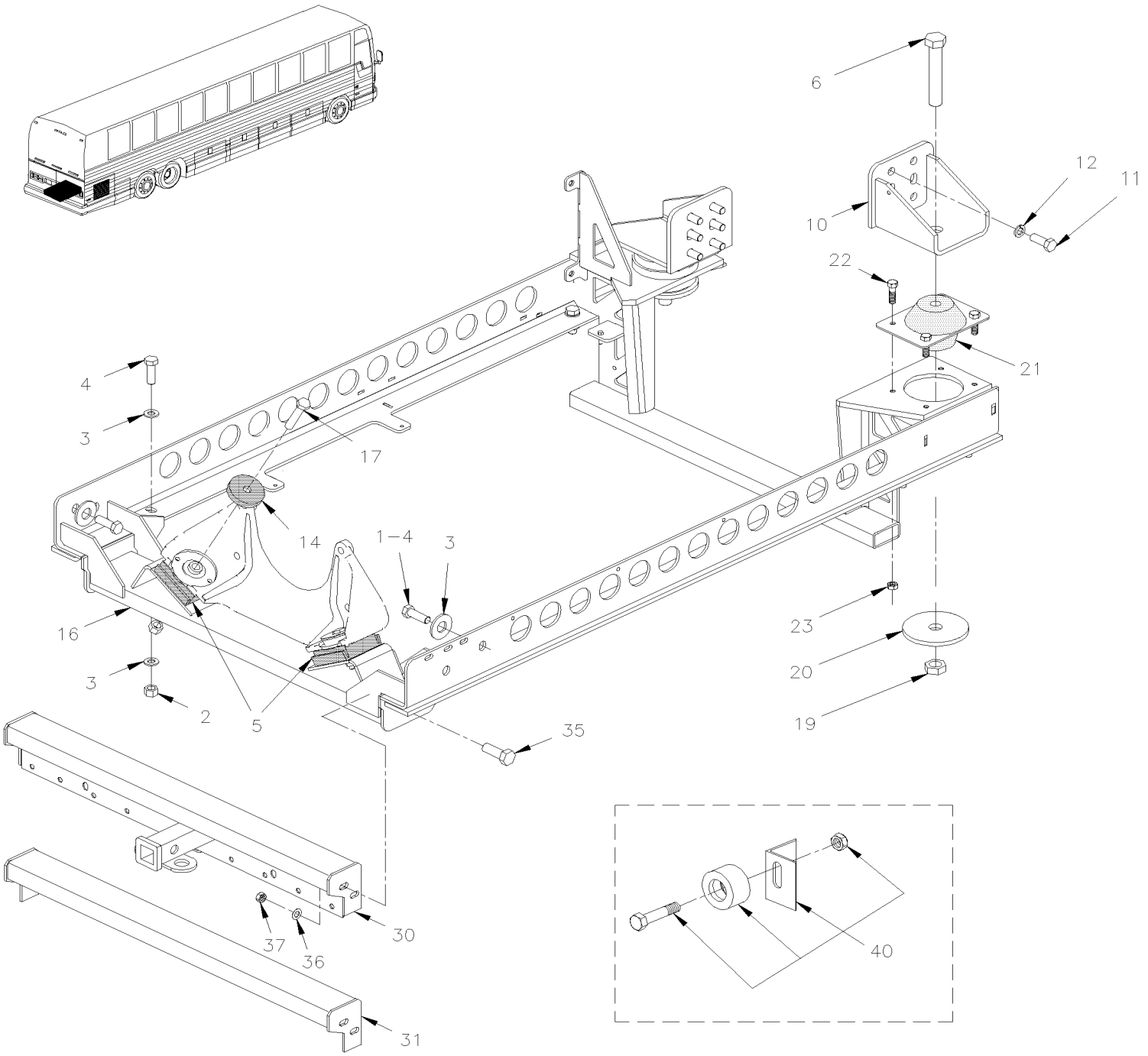

From 4-8346 To 8-9339		Date:07/2024	PAGE:Y2-0150-01

ENGINE CRADLE - WITH DETROIT S-60

Item#	Part	Description	XLII 45	XLII MTH40	XLII MTH45	XLII MTH45E	NOTES
1	500776	SCREW CAP HEX M16-2.0x110 G8.8 Z050	2	2	2	2	
2	500781	NUT HEX STO M16-2.0 DP	8	8	8	8	
3	5001150	WASHER FL 17.0x30.0x3.0 N500	14	14	14	14	
4	5001372	SCREW CAP HEX M16-2.0x50 G10.9 N500	8	8	8	8	
5	510427	INSULATOR, RUBBER MOUNT SQUARE	2	2	2	2	
6	500571	SCREW CAP HEX M24-3.0x150 G10.9 N500	2	2	2	2	
10	012194	SUPPORT REAR	2	2	2	2	
NS	012282	SUPPORT REAR R.H. W/"ZF" TRANS	1				Z
NS	012278	SUPPORT REAR L.H. W/"ZF" TRANS	1				Z
11	5001590	SCREW CAP HEX M16-2.0x40 G10.9 N500	12	12	12	12	
11	501591	MALE CONNECTOR / JIC 37° FITTING / #6JIC-Mx1/2NPT-M STL	8				Z
12	502894	SCREW CAP HEX M8-1.25x120 G8.8 ZG603	12	12	12	12	
13	5001150	WASHER FL 17.0x30.0x3.0 N500	12	12	12	12	
14	510428	INSULATOR, RUBBER MOUNT ROUND	2	2	2	2	
16	012376	ENGINE CRADLE / "ZF" TRANS	1				
16	012379	ENGINE CRADLE / W/WORLD, W/O RETARDER	1	1	1	1	
16	012378	ENGINE CRADLE / W/WORLD, W/RETARDER & TRAILER HITCH		1	1	1	
16	012837	ENGINE CRADLE / W/WORLD, W/O RETARDER & W/TRAILER HITCH		1	1	1	
16	012386	ENGINE CRADLE / W/WORLD, W/RETARDER	1	1	1	1	
16	Call order desk	ENGINE CRADLE	1				P T
16	015994	. ENGINE CRADLE FIXING /	1	1	1	1	
17	5001501	SCREW CAP HEX M16-2.0x90 G10.9 Z050	2	2	2	2	
19	500570	NUT HEX STO M24-3.0 GR.10 N500	2	2	2	2	
20	012178	WASHER, INSULATOR	2	2	2	2	
21	510456	INSULATOR, RUBBER	2	2	2	2	
22	5001308	SCREW CAP HEXF M10-1.5x40 G10.9 N500	8	8	8	8	
23	5001758	NUT HEX STO M10-1.5 N500	8	8	8	8	
30	410778	PROTECTOR ASSY / W/TRAILER HITCH	1	1	1	1	
31	410807	PROTECTOR ASSY	1	1	1	1	
35	502731	SCREW CAP HEX M12-1.75x40 G8.8 Z050	4	4	4	4	
35	502544	SCREW CAP HEX M16-2.0x40 G8.8 Z050	4	4	4	4	
36	500446	WASHER FL .531x1.250x.125 Z050	4	4	4	4	
36	5001150	WASHER FL 17.0x30.0x3.0 N500	4	4	4	4	
37	500811	NUT HEX STO M12-1.75 G500	4	4	4	4	
37	500781	NUT HEX STO M16-2.0 DP	4	4	4	4	
40	**Y2-0120-00**	**DRIVE PULLEY & BELTS - BUS & MTH**					
40	**Y2-0120-50**	**DRIVE PULLEY & BELTS - MTH**					
		T) WITH TRAILER HITCH 10,000 LBS					
		Z) WITH "ZF" TRANSMISSION					

From 4-8346 To 8-9339		Date:07/2024	PAGE:Y2-0150-01

ENGINE CRADLE - WITH DETROIT S-60

Item#	Part	Description	XLII 45	XLII MTH40	XLII MTH45	XLII MTH45E	NOTES
		P) CALL ORDER DESK FOR SPECIFIC APPLICATION (V.I.N.)					

From Y-7046 To 8-9339		Date:07/2024	PAGE:Y2-0155-10
ENGINE TRANSMISSION GUARD & AIR SHIELD DETROIT S-60			

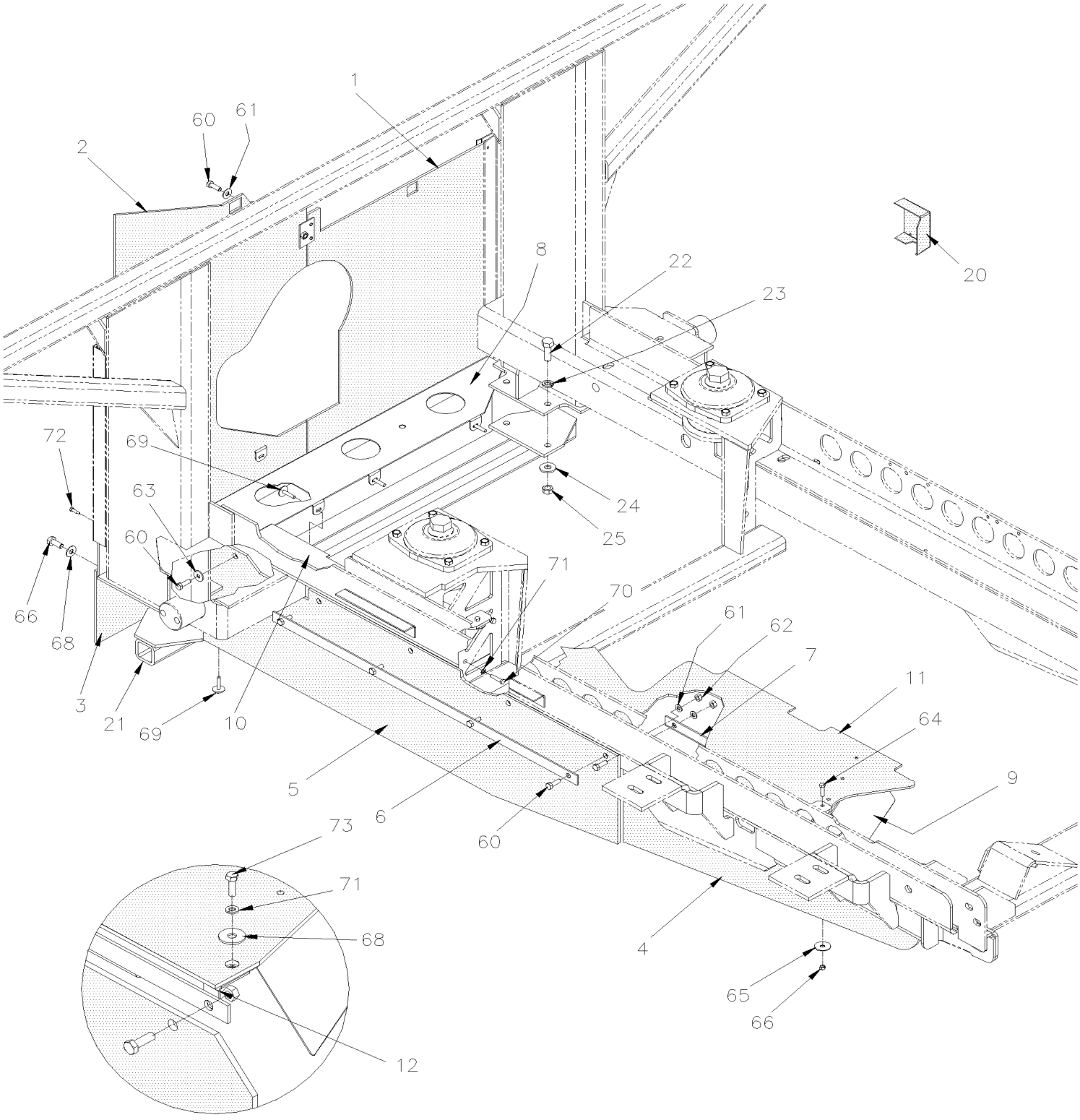

From Y-7046 To 8-9339		Date:07/2024	PAGE:Y2-0155-10
ENGINE TRANSMISSION GUARD & AIR SHIELD DETROIT S-60			

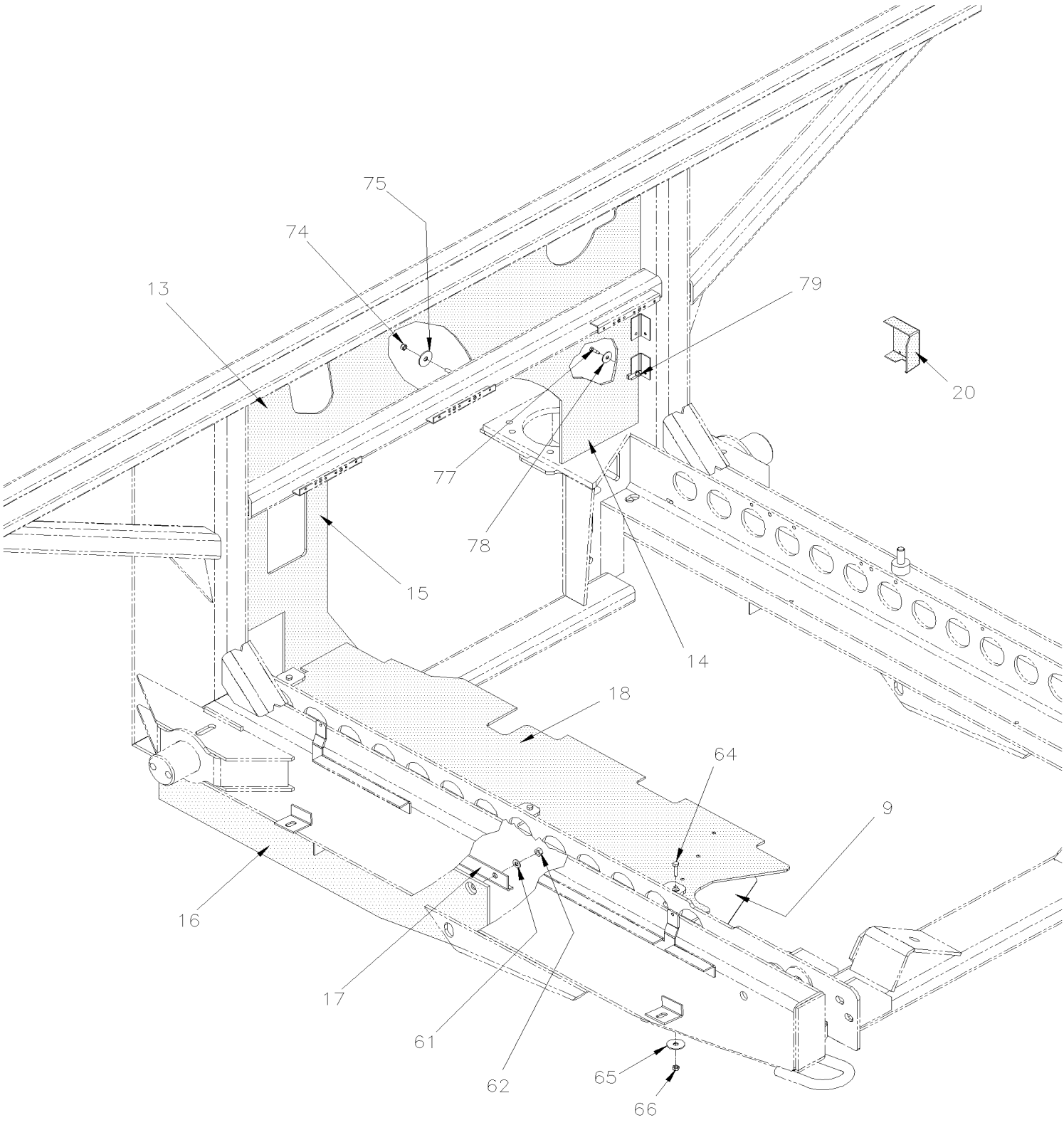

From Y-7046 To 8-9339		Date:07/2024	PAGE:Y2-0155-10

ENGINE TRANSMISSION GUARD & AIR SHIELD DETROIT S-60

Item#	Part	Description	XLII 45	XLII MTH40	XLII MTH45	XLII MTH45E	NOTES
1	071101	PROTECTOR R.H.	1		1		S
. NS	071109	. PLATE ASSY W/WEDL-NUT M8-1.25	2		2		S
. NS	504379	. RIVET POP DOME OE 3/16x1/4 SS	4		4		S
1	071101	PROTECTOR R.H. To 1-7413	1		1		R
. NS	071109	. PLATE ASSY W/WEDL-NUT M8-1.25 To 1-7413	2		2		R
. NS	504379	. RIVET POP DOME OE 3/16x1/4 SS To 1-7413	4		4		R
1	071223	PROTECTOR R.H. / W/RETARDER From 1-7414	1		1		A R
2	071102	PROTECTOR L.H.	1				S ZF
2	071130	PROTECTOR L.H. To 8-9331			1		S
2	071464	PROTECTOR L.H. / W/O RETARDER From 8-9332			1		S
2	071130	PROTECTOR L.H. To 1-7413	1		1		R
2	071224	PROTECTOR L.H. From 1-7414 To 4-8345	1		1		R
2	071370	PROTECTOR L.H. From 4-8346 To 8-9331	1		1		R
2	071465	PROTECTOR L.H. / W/RETARDER From 8-9332			1		R
3	071103	PROTECTOR LOWER 186MM x 1094MM	1		1		
4	052369	AIR SHIELD BACKWARD	1		1		
5	052368	AIR SHIELD FORWARD	1		1		
6	052371	PLATE ATTACHMENT	1		1		
7	052370	ANGLE ATTACHMENT	1		1		
8	071131	SUPPORT, LOWER To 5-8369	1		1		
8	071365	SUPPORT, LOWER From 5-8370	1		1		
9	012301	DEFLECTOR PROTECTOR SS 110MM x 215MM / ENGINE COOLANT PIPE From 5-8797	1	1	1	1	
9	504339	RIVET POP DOME OE 1/8x3/8 SS From 5-8797	3	3	3	3	
10	052327	AIR SHIELD BOX SS To 4-8345	1		1		
10	052540	AIR SHIELD BOX SS From 4-8346	1		1		
10	012226	AIR SHIELD BOX SS / W/"ZF" TRANS From 4-8165 To 4-8345	1				
10	012275	AIR SHIELD BOX SS / W/"ZF" TRANS From 4-8346	1				
11	011999	AIR SHIELD To 4-8345	1		1		
11	012173	AIR SHIELD To 4-8345	1		1		
11	012184	AIR SHIELD / W/RETARDER From 4-8346	1		1		A
11	012201	AIR SHIELD / W/O RETARDER From 4-8346	1		1		
11	012227	AIR SHIELD / W/"ZF" TRANS From 4-8165 To 4-8345	1				
11	012272	AIR SHIELD / W/"ZF" TRANS From 4-8346	1				
12	012228	AIR SHIELD ANGLE SUPPORT / W/"ZF" TRANS From 4-8165	1				
13	011704	GUARD UPPER		1		1	
14	011706	GUARD LOWER R.H. To 4-8345		1		1	A
14	012198	GUARD LOWER R.H. / W/RETARDER From 4-8346		1		1	
14	012252	GUARD LOWER R.H. / W/O RETARDER From 4-8346		1		1	
15	011705	GUARD LOWER L.H. To 3-8164		1		1	A
15	012170	GUARD LOWER L.H. W/MODINE From 4-8165 To 4-8345		1		1	
15	012251	GUARD LOWER L.H. / W/O RETARDER From 4-8346		1		1	
16	052373	AIR SHIELD To 4-8345		1		1	

From Y-7046 To 8-9339		Date:07/2024	PAGE:Y2-0155-10

ENGINE TRANSMISSION GUARD & AIR SHIELD DETROIT S-60

Item#	Part	Description	XLII 45	XLII MTH40	XLII MTH45	XLII MTH45E	NOTES
16	052563	AIR SHIELD From 4-8346		1		1	
17	052372	ANGLE ATTACHMENT To 4-8345		1		1	
17	052564	ANGLE ATTACHMENT 743MM From 4-8346		1		1	
18	011999	AIR SHIELD o To 3-8164		1		1	
18	012173	AIR SHIELD From 4-8165 To 4-8345		1		1	
18	012201	AIR SHIELD / W/O RETARDER From 4-8346 To 8-9276				1	A
18	012428	AIR SHIELD / W/O RETARDER From 8-9277				1	
18	012184	AIR SHIELD / W/RETARDER From 4-8346				1	
20	382033	PROTECTOR "E.C.M." / PLASTIC From 4-8165 To 4-8358	1	1	1	1	
21	171605	BAR, TRANSMISSION PROTECTOR	1		1		
22	502731	SCREW CAP HEX M12-1.75x40 G8.8 Z050	4		4		
23	500482	WASHER LO SPT .506x.873x.125 Z050	4		4		
24	500446	WASHER FL .531x1.250x.125 Z050	4		4		
25	500860	NUT HEX M12-1.75 Z050	4		4		
60	502780	SCREW CAP HEX M8-1.25x25 SS BK	10	10	10	10	
61	500874	WASHER FL 8.4x17.0x1.6 Z050	10	10	10	10	
61	5001341	WASHER FL 8.4x17.0x1.6 SS	AR	AR	AR	AR	
62	502744	NUT HEX STO M8-1.25 Z050	8	8	8	8	
63	500381	WASHER FL 8.4x25.0x2.0 N500	1	1	1	1	
64	502737	SCREW CAP HEX M6-1.0x25 SS BK	3	3	3	3	
65	5001467	WASHER FL .343x1.250x.062 SS18-8	3	3	3	3	
66	502511	NUT HEX NYRT M6-1.0 Z050	3	3	3	3	
67	5001231	SCREW CAP HEX M10-1.5x25 SS	6	6	6	6	
68	500270	WASHER FL .406x1.000x.063 SS	6	6	6	6	
69	502810	SCREW TP CAP HEXW FL M6.3-1.81x30 PHC	6	6	6	6	
70	502686	SCREW CAP HEX M6-1.0x30 SS BK	2	2	2	2	
71	502853	WASHER LO SPT 6.1x11.8x1.6 N500	2	2	2	2	
72	5001169	SCREW TP CAP HEXW #12x3/4 SS410	2	2	2	2	
73	502622	SCREW CAP HEX M6-1.0x20 SS BK	1	1	1	1	
74	502621	NUT HEX STO M6-1.0 Z050		AR		AR	
75	500468	WASHER FL .281x1.250x.065 Z050		AR		AR	
77	500535	SCREW TP CAP HEX #14x3/4 Z050	2	2	2	2	
77	502818	SCREW CAP HEX M6-1.0x35 G8.8 Z050	AR	AR	AR	AR	
78	502573	WASHER FL 6.4x12.5x1.6 SS	2	2	2	2	
78	500468	WASHER FL .281x1.250x.065 Z050	AR	AR	AR	AR	
79	502764	NUT SPR J #14A .035-.046	2	2	2	2	
79	502621	NUT HEX STO M6-1.0 Z050	AR	AR	AR	AR	
NS	052375	DECAL / "WARNING WARANTY....." / ENGLISH & FRANCAIS	1	1	1	1	
NS	052576	DECAL / "WARNING WARANTY....." / ENGLISH & SPANISH	1	1	1	1	

From Y-7046 To 8-9339		Date:07/2024	PAGE:Y2-0155-10

ENGINE TRANSMISSION GUARD & AIR SHIELD DETROIT S-60

Item#	Part	Description	XLII 45	XLII MTH40	XLII MTH45	XLII MTH45E	NOTES
		A) AS SHOWN					
		R) WITH RETARDER					
		S) WITHOUT RETARDER					
		ZF) WITH "ZF" TRANSMISSION					

From Y-7462 To 8-9339		Date:07/2024	PAGE:Y2-0160-00
FLYWHEEL - WITH MANUAL TRANS			

AUTOMATIC TRANSMISSION

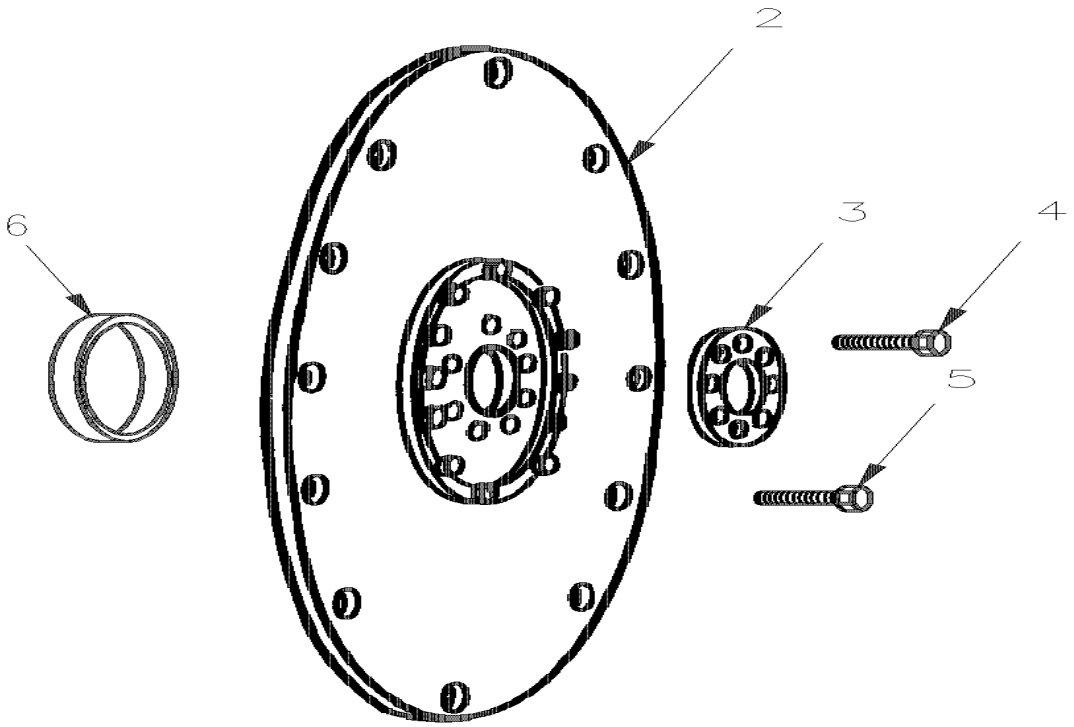

MANUAL TRANSMISSION

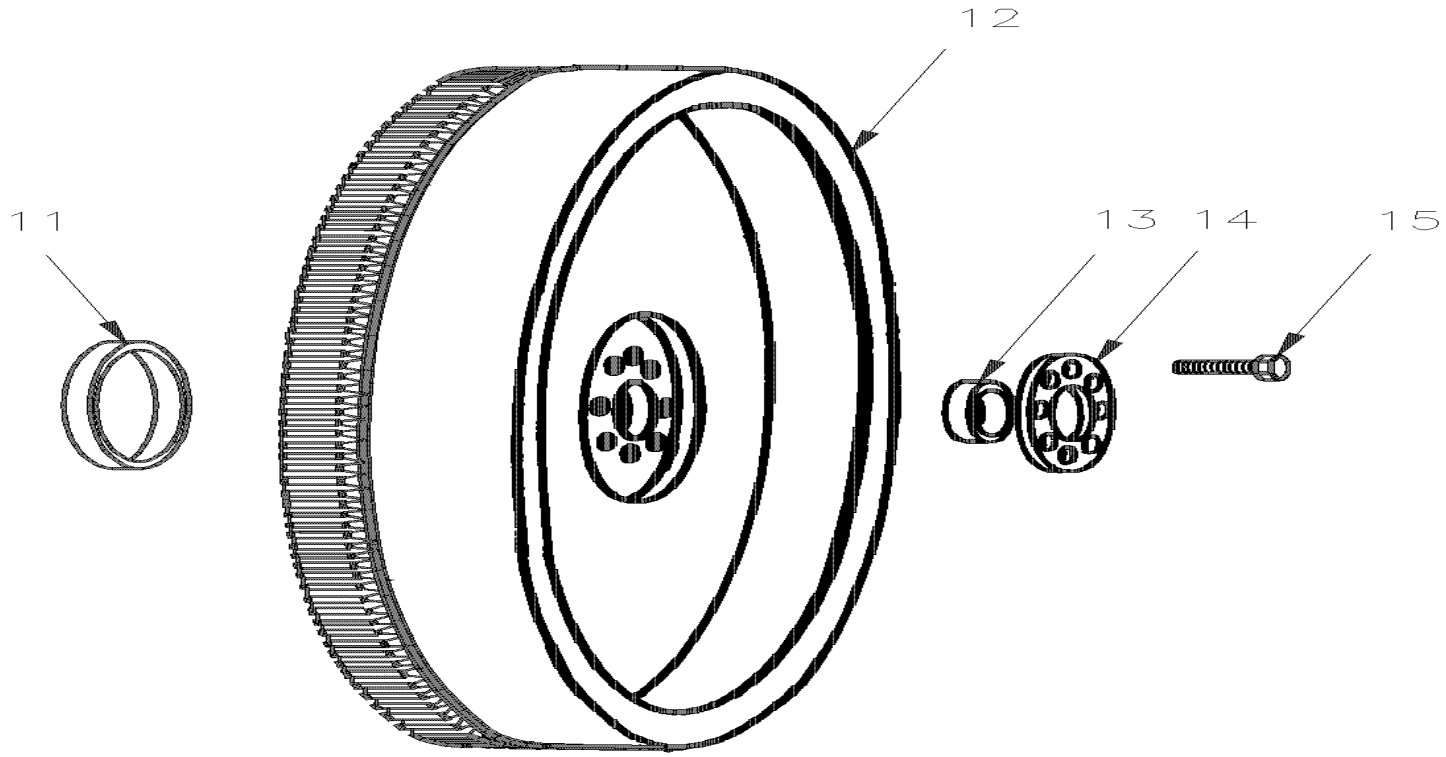

From Y-7462 To 8-9339		Date:07/2024	PAGE:Y2-0160-00

FLYWHEEL - WITH MANUAL TRANS

Item#	Part	Description	XLII 45	XLII MTH40	XLII MTH45	XLII MTH45E	NOTES
		SERIES 60 WITH AUTOMATIC TRANSMISSION					
	571728	KIT AUTO TRANS ADAPTOR FOR SERIES 60	1	1	1	1	
	510363	KIT AUTO TRANS ADAPTOR FOR SERIES 60	1	1	1	1	
2	N.S.P.	. PLATE FLEXIBLE 29513005	3	3	3	3	2
3	N.S.P.	. WEARPLATE 29514029	1	1	1	1	2
4	510476	. SCREW CAP HEX / FLEX PLATE / 9/16-18 X 1 3/4"	12	12	12	12	
4		. HUB ADAPTOR 29510823	1	1	1	1	
NS	510937	. SCREW PATCH LOCK M5-0.8x14	2	2	2	2	
NS	295131006	RING GEAR ADAPTOR ASSY / W/AUTOMATIC TRANS	1	1	1	1	
5	5001217	SCREW CAP HEX M8-1.25x20 G10.9	12	12	12	12	
6	N.S.P.	SEAL OIL / FORMER ENGINE (BELOW 430XXX APROX) 23516969	1	1	1	1	2
6	N.S.P.	SEAL OIL 23519651	1	1	1	1	2
		SERIES 60 WITH "ZF" TRANSMISSION					
11	N.S.P.	SEAL OIL 23519651	1				2
12	N.S.P.	FLYWHEEL 23529418	1				2
13	507113	BALL BEARING	1				
14	510225	PLATE SCUFF	1				
15	510476	SCREW CAP HEX / FLEX PLATE / 9/16-18 X 1 3/4"	12				
		2) NOT SOLD BY PREVOST (SEE MANUFACTURING PART NUMBER AT END OF DESCRIPTION LINE)					

From Y-7046 To 8-9339		Date:07/2024	PAGE:Y2-0165-00
JACOB'S - ENGINE BRAKE - WITH DETROIT S-60			

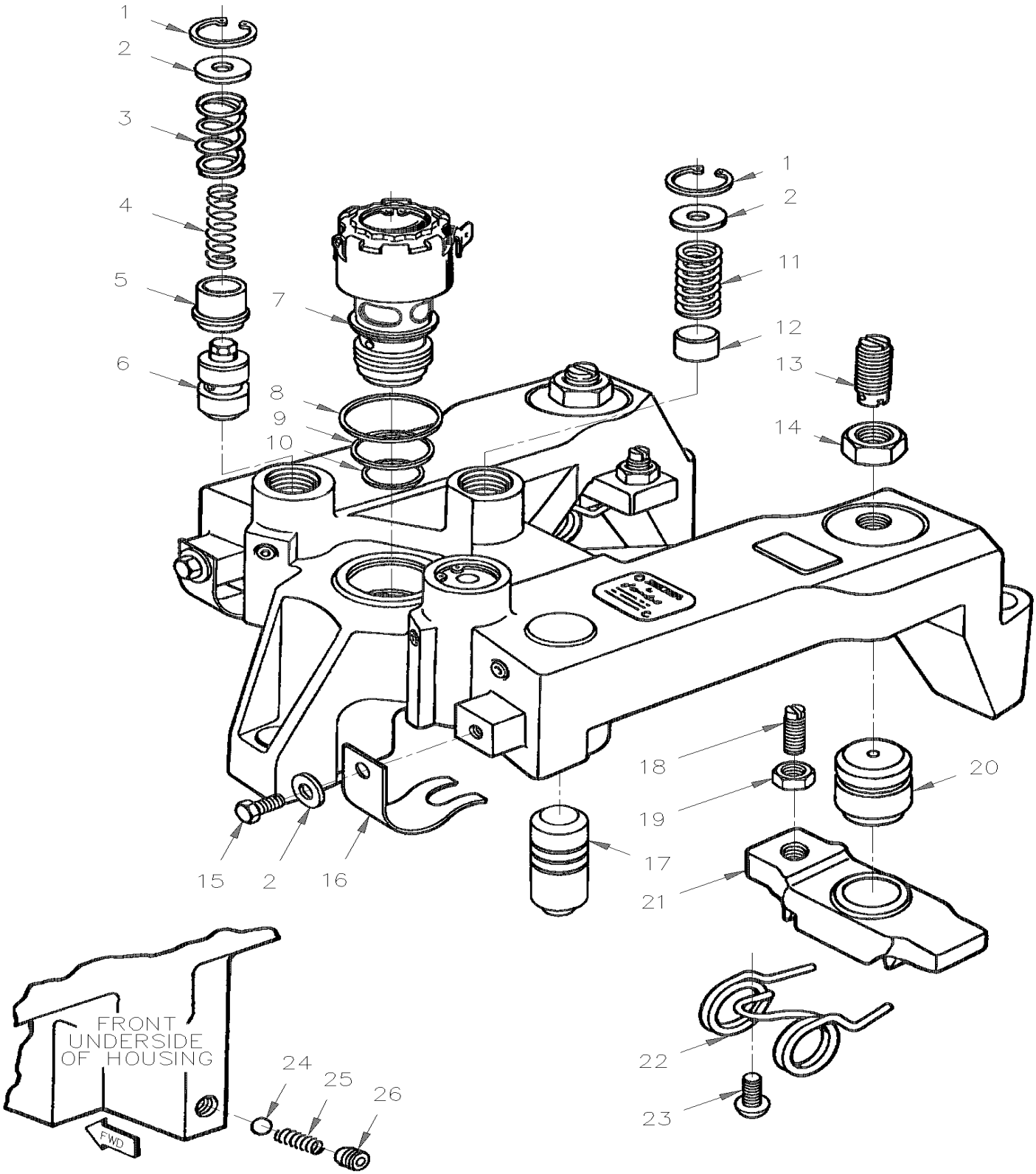

From Y-7046 To 8-9339		Date:07/2024	PAGE:Y2-0165-00

JACOB'S - ENGINE BRAKE - WITH DETROIT S-60

Item#	Part	Description	XLII 45	XLII MTH40	XLII MTH45	XLII MTH45E	NOTES
	510507	KIT JACOB'S 11.1 LITER	1	1	1	1	
	510508	KIT JACOB'S 12.7 LITER	1	1	1	1	
	N.S.P.	HOUSING ASSY - 12 VOLTS (#017122)	3	3	3	3	2
1	N.S.P.	. RETAINING RING (#012991)	3	3	3	3	2
2	N.S.P.	. COVER (#016505)	5	5	5	5	2
3	N.S.P.	. STOP SPRING (#001519)	2	2	2	2	2
4	N.S.P.	. SPRING (GREEN) (#001518)	2	2	2	2	2
5	N.S.P.	. COLLAR (#016557)	2	2	2	2	2
6	N.S.P.	. CONTROL VALVE (011930)	2	2	2	2	2
7	N.S.P.	. SOLENOID VALVE (#016440)	1	1	1	1	2
8	510411	. SEAL RING / UPPER	1	1	1	1	
9	510412	. SEAL RING / CENTER	1	1	1	1	
10	510413	. SEAL RING / LOWER	1	1	1	1	
11	N.S.P.	. SPRING (#012990)	1	1	1	1	2
12	N.S.P.	. PISTON - ACCUMULATOR (#012983)	1	1	1	1	2
13	N.S.P.	. POWER LASH SCREW ASSY (#020382)	2	2	2	2	2
14	N.S.P.	. HEX NUT (#011395)	2	2	2	2	2
15	N.S.P.	. SCREW (#001492)	2	2	2	2	2
16	N.S.P.	. FLAT SPRING (#016535)	2	2	2	2	2
17	N.S.P.	. MASTER PISTON (#012981)	2	2	2	2	2
18	N.S.P.	. ADJUSTING SCREW (#011426)	2	2	2	2	2
19	N.S.P.	. HEX NUT (#001026)	2	2	2	2	2
20	N.S.P.	. SLAVE PISTON (#017048)	2	2	2	2	2
21	N.S.P.	. BRIDGE (#016771)	2	2	2	2	2
22	N.S.P.	. TORSION SPRING (#019576)	2	2	2	2	2
23	N.S.P.	. BUTTONHEAD SCREW (#0190741)	2	2	2	2	2
24	N.S.P.	. BALL (#001021)	2	2	2	2	2
25	N.S.P.	. BALL CHECK SPRING (#011720)	1	1	1	1	2
26	N.S.P.	. PIPE PLUG (#008888)	1	1	1	1	2
26	N.S.P.	SOLONOID HARNESS EXTERNAL (#017393)	1	1	1	1	2
26	N.S.P.	SOLONOID HARNESS INTERNAL (#017392)	1	1	1	1	2
26	N.S.P.	FILLER GAUGE .040 LASH / TO USE W/11.1 LITER (#017277)	AR	AR	AR	AR	2
26	N.S.P.	FILLER GAUGE .020 LASH / TO USE W/12.7 LITER (#017278)	AR	AR	AR	AR	2
		2) NOT SOLD BY PREVOST (SEE MANUFACTURING PART NUMBER AT END OF DESCRIPTION LINE)					

		Date:07/2024	Y2-02
CLUTCH			

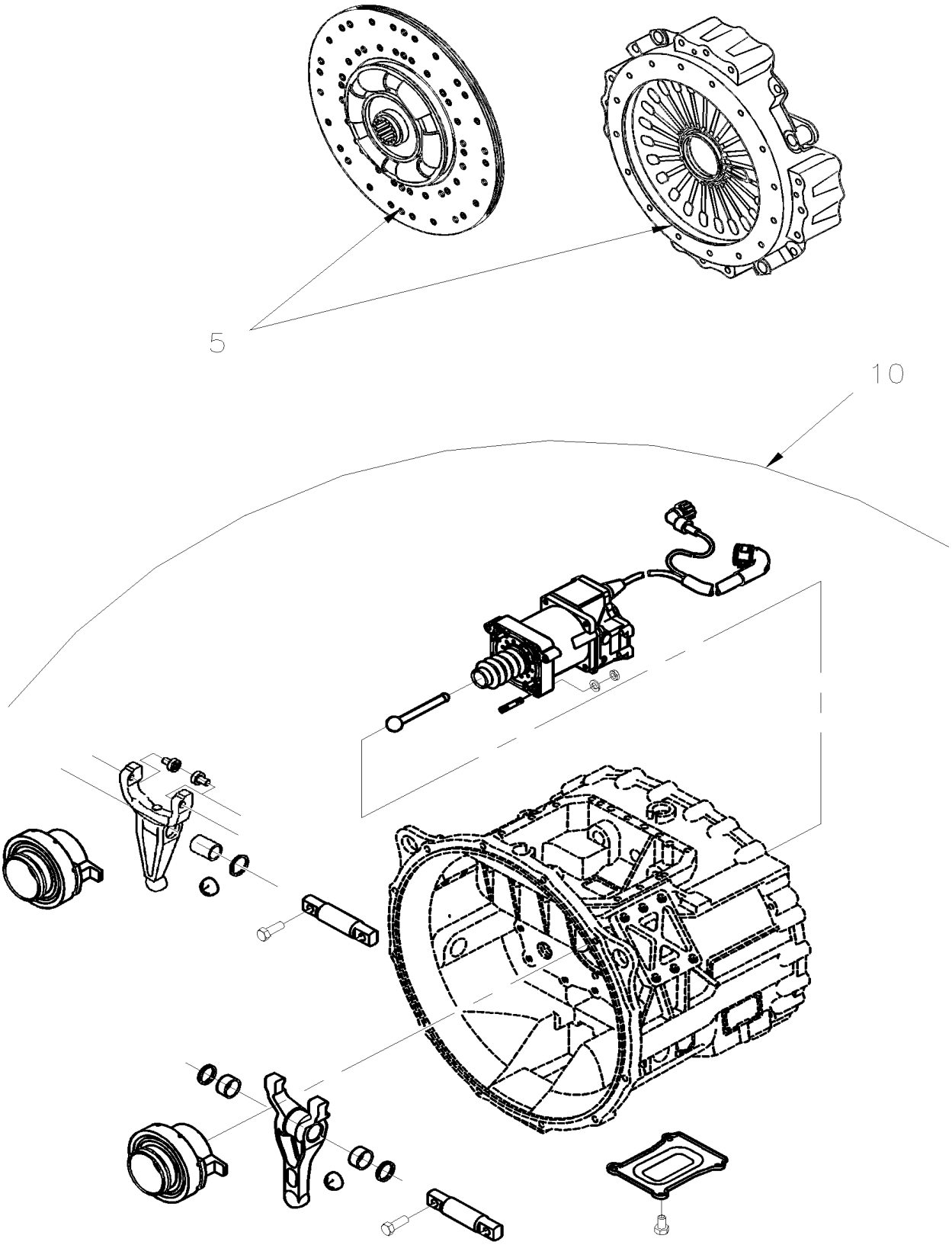

		Date:07/2024	Y2-02

CLUTCH

Item#	Part	Description	XLII 45	XLII MTH40	XLII MTH45	XLII MTH45E	NOTES
5	Y2-0205-00	CLUTCH PRESSURE PLATE WITH "ZF" TRANS From Y-7462 To 6-8906	1				
10	Y2-0215-00	CLUTCH CONTROL REAR SECTION WITH "ZF" TRANS From Y-7462 To 6-8906	1				

From Y-7462 To 6-8906		Date:07/2024	PAGE:Y2-0205-00
CLUTCH PRESSURE PLATE WITH "ZF" TRANS			

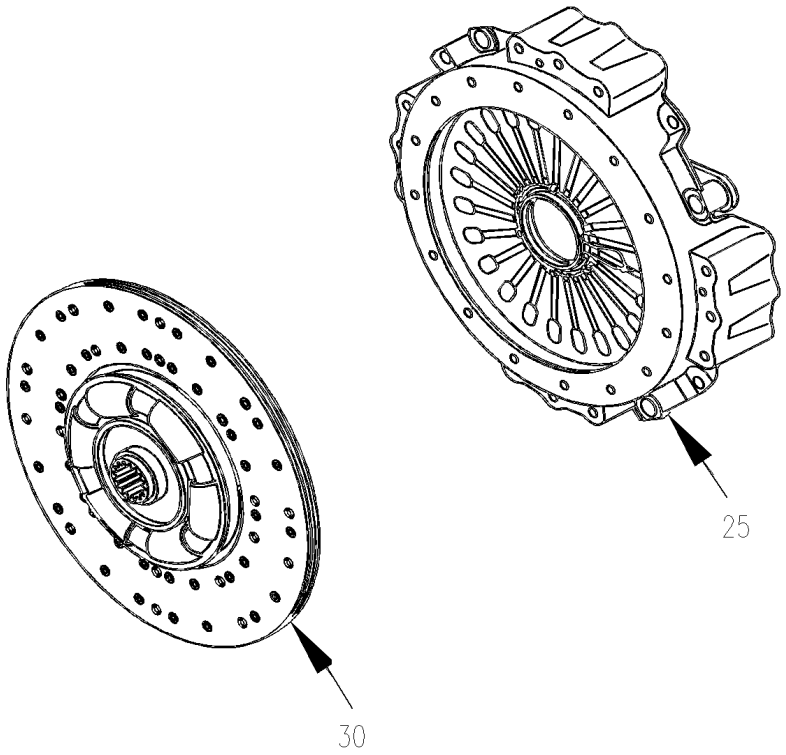

From Y-7462 To 6-8906		Date:07/2024	PAGE:Y2-0205-00

CLUTCH PRESSURE PLATE WITH "ZF" TRANS

Item#	Part	Description	XLII 45	XLII MTH40	XLII MTH45	XLII MTH45E	NOTES
25	571776	PRESSURE PLATE	1				
30	571775	CLUTCH ASSY	1				
NS	510476	SCREW CAP HEX / FLEX PLATE / 9/16-18 X 1 3/4"	12				

From Y-7462 To 6-8906		Date:07/2024	PAGE:Y2-0215-00
CLUTCH CONTROL REAR SECTION WITH "ZF" TRANS			

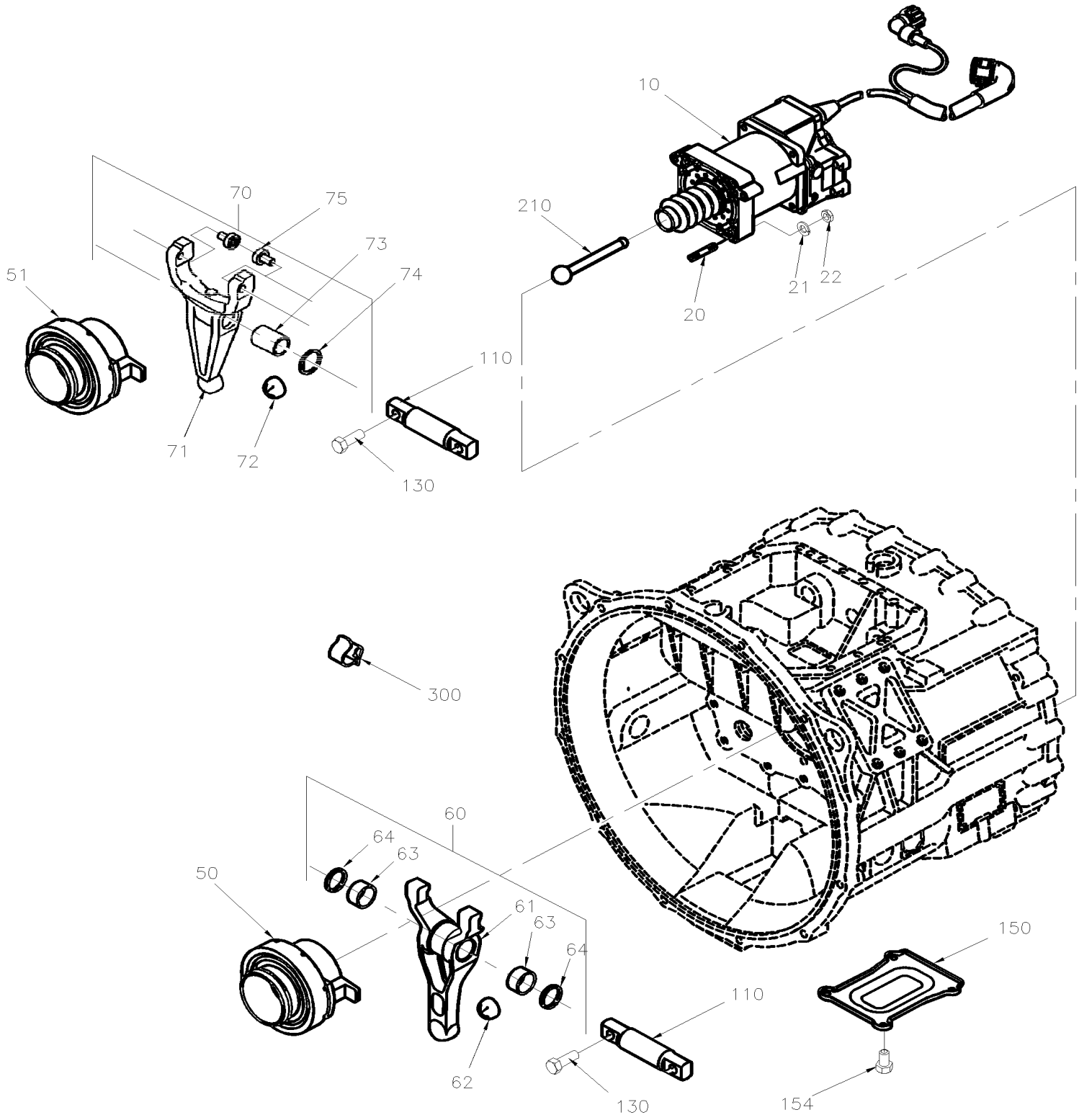

From Y-7462 To 6-8906		Date:07/2024	PAGE:Y2-0215-00

CLUTCH CONTROL REAR SECTION WITH "ZF" TRANS

Item#	Part	Description	XLII 45	XLII MTH40	XLII MTH45	XLII MTH45E	NOTES
	MI06-06	SEE MAINTENANCE INFORMATION					
10	572005	CLUTCH ACTUATOR ASSY WITH CABLE HARNESS / TO GS3 SHIFTER	1				
. NS	572135	. CHECK VALVE FILTER IN LINE CONNECTOR	1				
. NS	MI06-06	. SEE MAINTENANCE INFORMATION	1				
10	85109289	CLUTCH ACTUATOR ASSY WITH CABLE HARNESS / TO GS3 SHIFTER	1				
20	572007	STUD M8x45 8.8 DIN 835	4				
21	500874	WASHER FL 8.4x17.0x1.6 Z050	4				
22	572006	NUT HEX M8	4				
50	572008	RELEASE BEARING	1				
51	572088	RELEASE BEARING	1				
60	572009	RELEASE FORK ASSY	1				
61	572010	. RELEASE FORK	1				
62	572011	. BALL CUP	1				
63	572012	. BUSHING	2				
64	572013	. SHAFT SEAL	2				
		NEXT RELEASE FORK ASSY MAY BE ALSO					
		USE IN RETROFIT ASK PART NUMBER 572039					
70	572089	RELEASE FORK ASSY	1				
71	572090	RELEASE FORK	1				
72	572011	BALL CUP	1				
73	572091	BUSHING	1				
74	572013	SHAFT SEAL	2				
75	572092	CAM FOLLOWER	2				
110	572014	RELEASE SHAFT	1				
130	572015	SCREW CAP HEX M12x50 G10.9 DIN 933	2				
150	572016	COVER	1				
154	502790	SCREW CAP HEX M8-1.25x20 G8.8 Z050	4				
210	572017	PRESSING ROD	1				
300	572018	CABLE CLIP	1				
300	572019	CABLE CLIP	1				
400	572039	KIT RETROFIT NEW FORK & BEARING RELEASE	1				
. NS	572089	. RELEASE FORK ASSY	1				
. NS	572090	. RELEASE FORK	1				
. NS	572011	. BALL CUP	1				
. NS	572091	. BUSHING	1				
. NS	572013	. SHAFT SEAL	2				
. NS	572092	. CAM FOLLOWER	2				

		Date:07/2024	Y2-03
FUEL			

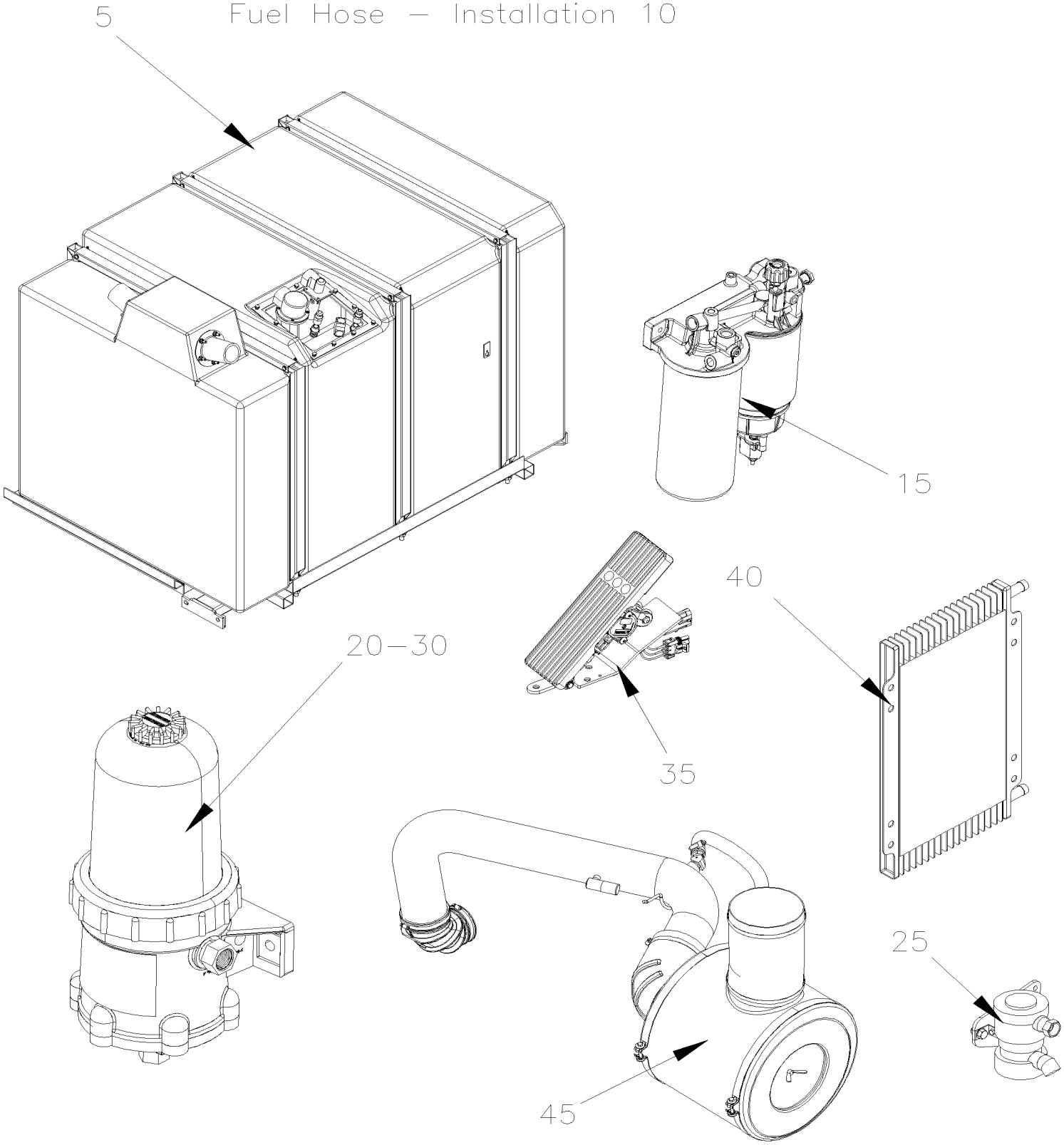

		Date:07/2024	Y2-03

FUEL

Item#	Part	Description	XLII 45	XLII MTH40	XLII MTH45	XLII MTH45E	NOTES
5	Y2-0305-00	FUEL TANK PLASTIC 208 GALLONS From Y-7046 To 8-9339					
5	Y2-0305-01	FUEL TANK PLASTIC 180 & 70 GALLONS From Y-7046 To 8-9339					
10	Y2-0310-00	FUEL HOSE - INSTALLATION From Y-7046 To 8-9339					
15	Y2-0311-00	FUEL FILTER - PRIMARY & SECONDARY From Y-7046 To 8-9339					
20	Y2-0311-15	FUEL FILTER / "PRO 382" From Y-7046 To 8-9339					
25	Y2-0312-00	FUEL PUMP - AUXILIARY From Y-7046 To 8-9339					
30	Y2-0312-10	FUEL PRO - INSTALLATION From Y-7046 To 3-8164					
30	Y2-0312-11	FUEL PRO - INSTALLATION From 4-8165 To 8-9339					
35	Y2-0315-10	ACCELERATOR PEDAL - ELECTRONIC From Y-7046 To 8-9339					
40	Y2-0316-00	FUEL COOLER - INSTALLATION From Y-7046 To 3-8164					
40	Y2-0316-01	FUEL COOLER - INSTALLATION From 4-8165 To 8-9339					
45	Y2-0330-00	AIR FILTER & INTAKE - INSTALLATION WITH DETROIT S-60 From Y-7046 To 8-9339					

From Y-7046 To 8-9339		Date:07/2024	PAGE:Y2-0305-00
FUEL TANK PLASTIC 208 GALLONS			

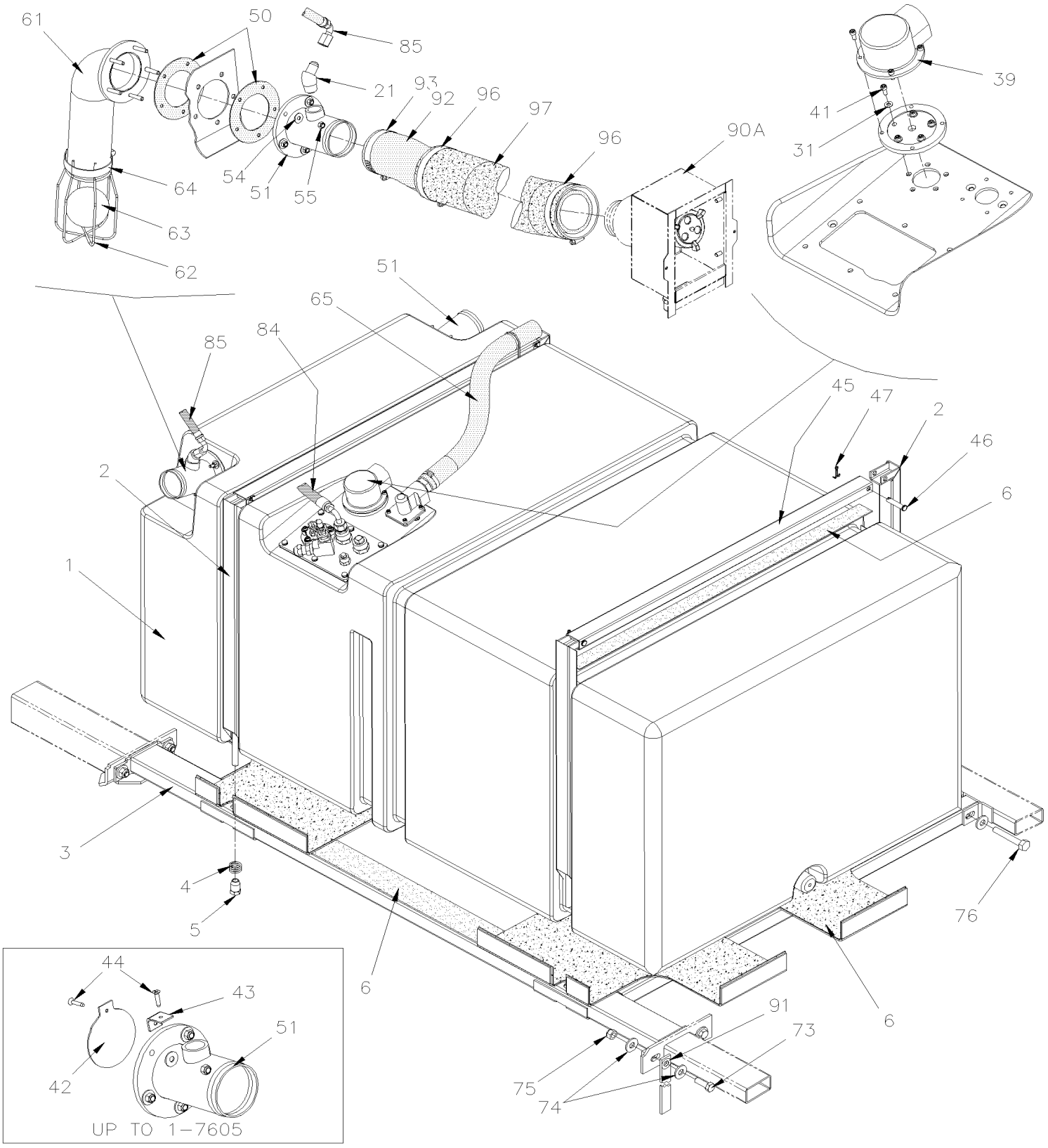

From Y-7046 To 8-9339		Date:07/2024	PAGE:Y2-0305-00
FUEL TANK PLASTIC 208 GALLONS			

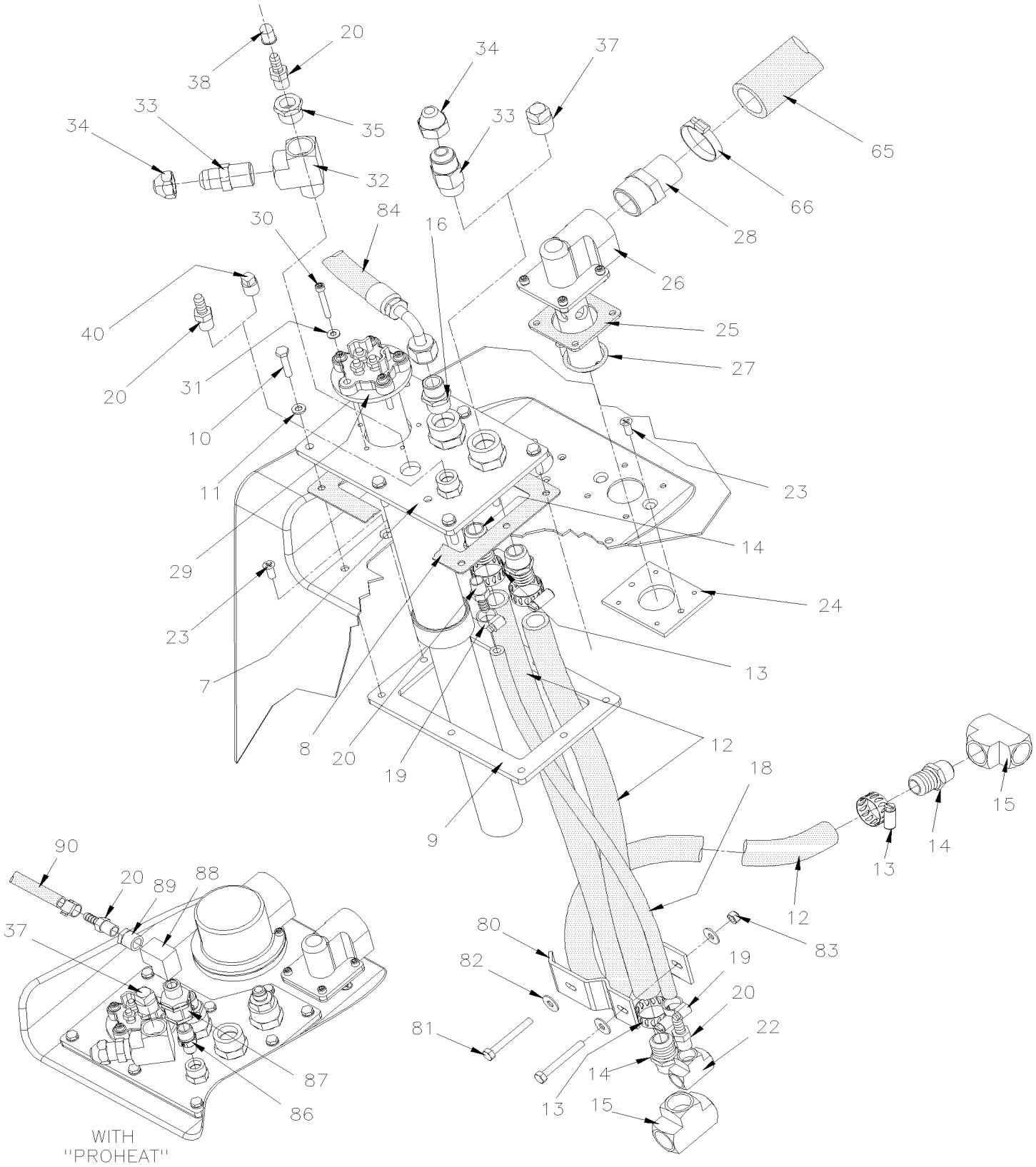

From Y-7046 To 8-9339		Date:07/2024	PAGE:Y2-0305-00

FUEL TANK PLASTIC 208 GALLONS

Item#	Part	Description	XLII 45	XLII MTH40	XLII MTH45	XLII MTH45E	NOTES
	Call order desk	FUEL TANK ASSY	1		1		P
	Call order desk	FUEL TANK ASSY	1		1		P
1	031794	. FUEL TANK / 208 GALLONS US / W/TWO INLET HOLES To 1-7603	1		1		
1	032455	. FUEL TANK / 208 GALLONS US / W/TWO INLET HOLES From 1-7604	1		1		
2	031846	. STRAP ASSY To 3-7990	2		2		
2	032463	. ATTACHMENT POST ASSY / 689MM From 3-7991	4		4		
3	031814	. REMOVABLE FLOOR ASSY	1		1		
3	032465	. REMOVABLE FLOOR ASSY	1				B
3	032447	. SHIM 197MM x 40MM SS	AR		AR		
4	502210	. SPRING COMPRESSION / .975 O.D. x 1.250 x .125 To 5-8574	1		1		
4	502932	. SPRING COMPRESSION / SS .975 O.D. x 1.250 x .125 From 5-8575	AR		AR		
5	031930	. NUT HEX SPECIAL M12-1.75 ST To 5-8574	4		4		
5	032607	. NUT HEX SPECIAL M12-1.75 SS From 5-8575	4		4		
NS	680038	. THREAD LOCKER LOCTITE #243 / BLUE / 50ml	AR		AR		
6	506758	. TAPE RUB ADH1 NEO 1/16"X 1 1/2"X50'	AR		AR		
6	031857	. RUBBER / ON THE CORNER OF TANK 418MM x 549MM	4		4		
6	031861	. RUBBER / ON THE RIGHT SIDE OF TANK 70MM x 480MM	1		1		
6	031859	. RUBBER / ON TOP OF TANK 30MM x 480MM	3		3		
6	031860	. RUBBER / BOTH SIDE OF TANK 30MM x 152MM	2		2		
NS	506007	. TAPE RUB ADH1 CC NEO 3/4" x 1" x 10' / BLACK 1220	AR		AR		
7	032189	. MAIN PLATE	1		1		
7	032826	. MAIN PLATE SERVICE	1		1		
8	031849	. GASKET	1		1		
9	031851	. INTERIOR FRAME ASSY	1		1		
10	502686	. SCREW CAP HEX M6-1.0x30 SS BK	8		8		
11	5001392	. WASHER FL 6.0x12.0x1.5 COP	8		8		
12	531417	. HOSE / 2556 / #10 X 48"	3		3		
13	504019	. HOSE CLAMP / 9/16"-1"1/16 SS / HS-10	6		6		
14	501942	. MALE CONNECTOR / PUSH-LOK FITTING / 1/2NPT-Mx#10 BR	3		3		
15	501472	. FEMALE UNION TEE / PIPE FITTING / 1/2NPT-Fx1/2NPT-Fx1/2NPT-F BR	3		3		
16	501739	. MALE CONNECTOR / JIC 37° FITTING / #8JIC-Mx1/2NPT-M STL	1		1		
18	531444	. HOSE / 2556 / #4 X 18 1/2"	1		1		
19	504014	. HOSE CLAMP / 1/4"-5/8" SS / HM-4	2		2		
20	507602	. MALE CONNECTOR / PUSH-LOK FITTING / 1/4NPT-Mx#4 BR	4		4		
21	5011159	. MALE ELBOW 45º / JIC 37° FITTING / #6JIC-Mx1/2NPT-M STL	1		1		
22	501337	. FEMALE UNION TEE / PIPE FITTING / 1/4NPT-Fx1/4NPT-Fx1/4NPT-F BR	1		1		
23	5001198	. SCREW MA FL PH M6-1.0x16 Z050	8		8		
24	031899	. INTERIOR FRAME	1		1		
25	531443	. GASKET / VALVE CONTROL LEVEL	1		1		
26	530099	. VALVE, FUEL TANK LEVEL CONTROL To 1-7603	1		1		
26	504701	. VALVE, FUEL TANK LEVEL CONTROL From 1-7604	1		1		
NS	531459	. VALVE, FUEL TANK LEVEL CONTROL EMCO	1				B

From Y-7046 To 8-9339		Date:07/2024	PAGE:Y2-0305-00

FUEL TANK PLASTIC 208 GALLONS

Item#	Part	Description	XLII 45	XLII MTH40	XLII MTH45	XLII MTH45E	NOTES
. NS	530212	. . GASKET / VALVE CONTROL LEVEL	1				B
NS	531410	. WHISTLE	1				B
27	507356	. O-RING	1		1		
28	501605	. BUSHING REDUCER / PIPE FITTING / 1NPT-Mx1/2NPT-F STL To 1-7603	1		1		
28	501205	. ADAPTER / COPPER @ PIPE / 1Mx1NPT-M From 1-7604	1		1		
28	030827	. NIPPLE To 1-7603	1		1		
29	531387	. SENSOR, FUEL LEVEL / 24"	1		1		
. NS	531419	. . GASKET, FUEL SENSOR	1		1		
30	5011135	. SCREW CAP HEXS #10-24x1 1/2 N500	10		10		
31	500593	. WASHER FL .200x.437x.036 BR	10		10		
32	501473	. MALE RUN TEE / PIPE FITTING / 1/2NPT-Mx1/2NPT-Fx1/2NPT-F BR	1		1		
33	501616	. MALE CONNECTOR / SAE 45º FITTING / #8FL-Mx1/2NPT-M BR	1		1		
34	501053	. CAP NUT / SAE 45º FITTING / #8FL-F BR	1		1		
35	501316	. BUSHING REDUCER / PIPE FITTING / 1/2NPT-Mx1/4NPT-F BR	1		1		
37	501306	. PLUG SQUARE HEAD / PIPE FITTING / 1/2NPT-M BR	1		1		
38	680733	. CAP PROTECTOR (NO-THREADED)	1		1		
39	530156	. VALVE PRESSURE	1		1		
. NS	531427	. . GASKET / (SMALL)	1		1		
. NS	531428	. . GASKET / (LARGE)	1		1		
39	531414	. VALVE PRESSURE	1				B
40	501304	. PLUG SQUARE HEAD / PIPE FITTING / 1/4NPT-M BR	1		1		
41	500143	. SCREW CAP HEXS #10-24x1/2 N500	5		5		
42	031898	. VALVE To 1-7603	1		1		
43	031897	. ANGLE To 1-7603	1		1		
44	500260	. SCREW TC FL PH #8-32x3/4 BK To 1-7603	2		2		
45	032443	. TRANSVERSAL CROSS BAR / 833.5 MM From 3-7991	2		2		
46	502121	. PIN, CLEVIS 3/8 x 1.625 BZC From 3-7991	4		4		
47	502102	. PIN, COTTER 1/8 x 1 From 3-7991	4		4		
50	031804	. GASKET	4		4		
50	032938	. GASKET	2		2		
51	031800	. FILLING HOSE ADAPTOR ASSY / R.H. WITH FUEL HOSE RETURN	1		1		
51	031896	. FILLING HOSE ADAPTOR ASSY / L.H.	2		2		
54	502686	. SCREW CAP HEX M6-1.0x30 SS BK To 1-7605	10		10		A
54	502511	. NUT HEX NYRT M6-1.0 Z050	10		10		
55	500411	. WASHER FL .260x.697x.050 SS	10		10		
61	031850	. INTERIOR FRAME To 1-7605	2		2		A
61	032437	. TUBE BALL RETAINER From 1-7606	2		2		
61	032914	. TUBE BALL RETAINER	2		2		
62	032438	. BASKET From 1-7606	2		2		
63	032657	. BALL 70MM O.D. From 1-7606	2		2		
63	032871	. BALL 77MM O.D.	2		2		S
64	504293	. HOSE CLAMP / 2"5/16-3"1/4 SS / E.T. 44 From 1-7606	2		2		

From Y-7046 To 8-9339		Date:07/2024	PAGE:Y2-0305-00

FUEL TANK PLASTIC 208 GALLONS

Item#	Part	Description	XLII 45	XLII MTH40	XLII MTH45	XLII MTH45E	NOTES
65	031474	. HOSE #12 27" To 1-7603	1		1		
65	032415	. HOSE #16 X 28" LG From 1-7604	2		2		
. NS	503579	. . HOSE 1" I.D. X 50' / "GREEN STRIPE" From 1-7604	AR		AR		
NS	504637	. CABLE TIE / 3/16" x 13"	AR		AR		
66	504021	. HOSE CLAMP / 11/16"-1"1/2 SS / HS-16	1		1		
73	500806	. SCREW CAP HEX M12-1.75X35 G10.9 G500	4		4		
74	500211	. WASHER FL .531x1.250x.125 N500	12		12		
75	500811	. NUT HEX STO M12-1.75 G500	6		6		
76	5001609	. SCREW CAP HEX M12-1.75x80 G10.9 DP	2		2		
80	032240	. HOLDING PLATE / TO HOLD TUBE	2		2		
81	502656	. SCREW CAP HEX M6-1.0x50 SS	2		2		
82	500411	. WASHER FL .260x.697x.050 SS	4		4		
83	502511	. NUT HEX NYRT M6-1.0 Z050	4		4		
84	032579	HOSE ASSY / #8 6125MM	1		1		
84	033237	HOSE ASSY / #8 6125MM	1		1		E
84	032652	HOSE ASSY / #8 6500MM	1		1		
84	033238	HOSE ASSY / #8 6500MM	1		1		E
85	032097	HOSE ASSY / #6 7991MM	1		1		
85	033221	HOSE ASSY / #6 7991MM	1		1		E
86	501749	NIPPLE REDUCER HEX / PIPE FITTING / 3/8NPT-Mx1/4NPT-Mx1 13/32 BR	1				
87	530042	CHECK VALVE 3/8 NPT	4				
88	509863	FEMALE ELBOW 90º / PIPE FITTING / 3/8NPT-Fx3/8NPT-F BR	1				
89	501314	BUSHING REDUCER / PIPE FITTING / 3/8NTP-Mx1/4NPT-F BR	1				
90	**Y2-2350-10**	**WATER HEATER - INSTALLATION**					
90A	**Y2-1875-00**	**FUEL TANK FILLING DOOR**					
91	505056	ANTISTATIC STRAP / UNDER STRUCTURE	1		1		
NS	031161	DECAL / FUEL RECOMMENDATIONS / FRENCH	1		1		
NS	031162	DECAL / FUEL RECOMMENDATIONS / ENGLISH	1		1		
NS	031164	DECAL / CERTIFICATION	1		1		
NS	400137	DECAL / DIESEL FUEL BLACK	1		1		
NS	403747	DECAL / INSTRUCTION FOR FILLING TANK /208 GAL BLACK	1		1		
92	031956	FILLING HOSE #40 652MM	1		1		
92	031855	FILLING HOSE #40 937MM	1		1		
93	504381	HOSE CLAMP / 2"3/4-3"5/8 SS / HT-350	2		2		
96	504235	HOSE CLAMP / 3"9/16"-4"1/2 SS / HS-64	4		4		
97	032569	HOSE 3 1/2" I.D. X 610MM	1		1		
97	032289	HOSE 3 1/2" I.D. X 750MM W/SLIDE-OUT From 6-8806			1		
97	032570	HOSE 3 1/2" I.D. X 915MM	1		1		
100	032413	KIT, FUEL SPILLWAY RETROFIT From Y-7046 To 1-7605	1		1		C
. NS	IS-98080	. SEE INSTRUCTION SHEET From Y-7046 To 1-7605					C

From Y-7046 To 8-9339		Date:07/2024	PAGE:Y2-0305-00

FUEL TANK PLASTIC 208 GALLONS

Item#	Part	Description	XLII 45	XLII MTH40	XLII MTH45	XLII MTH45E	NOTES
101	032504	KIT, RETROFIT FUEL TANK STRAP From Y-7046 To 3-7990	1		1		D
. NS	IS-02059	. SEE INSTRUCTION SHEET From Y-7046 To 3-7990	1		1		D
		A) FOR PRODUCT IMPROVEMENT OF SPILLWAY USE KIT # 032413 FOR VIN FROM Y-7046 TO 1-7605					
		B) WITH "EMCO WHEATON" FUEL CAP					
		C) INCLUDE ITEMS 8, 26, 28, 50, 54, 55, 61 to 66					
		D) INCLUDE ITEMS 2, 45 to 46					
		E) SERVICE ONLY					
		S) SERVICE					
		P) CALL ORDER DESK FOR SPECIFIC APPLICATION (V.I.N.)					

From Y-7046 To 8-9339		Date:07/2024	PAGE:Y2-0305-01
FUEL TANK PLASTIC 180 & 70 GALLONS			

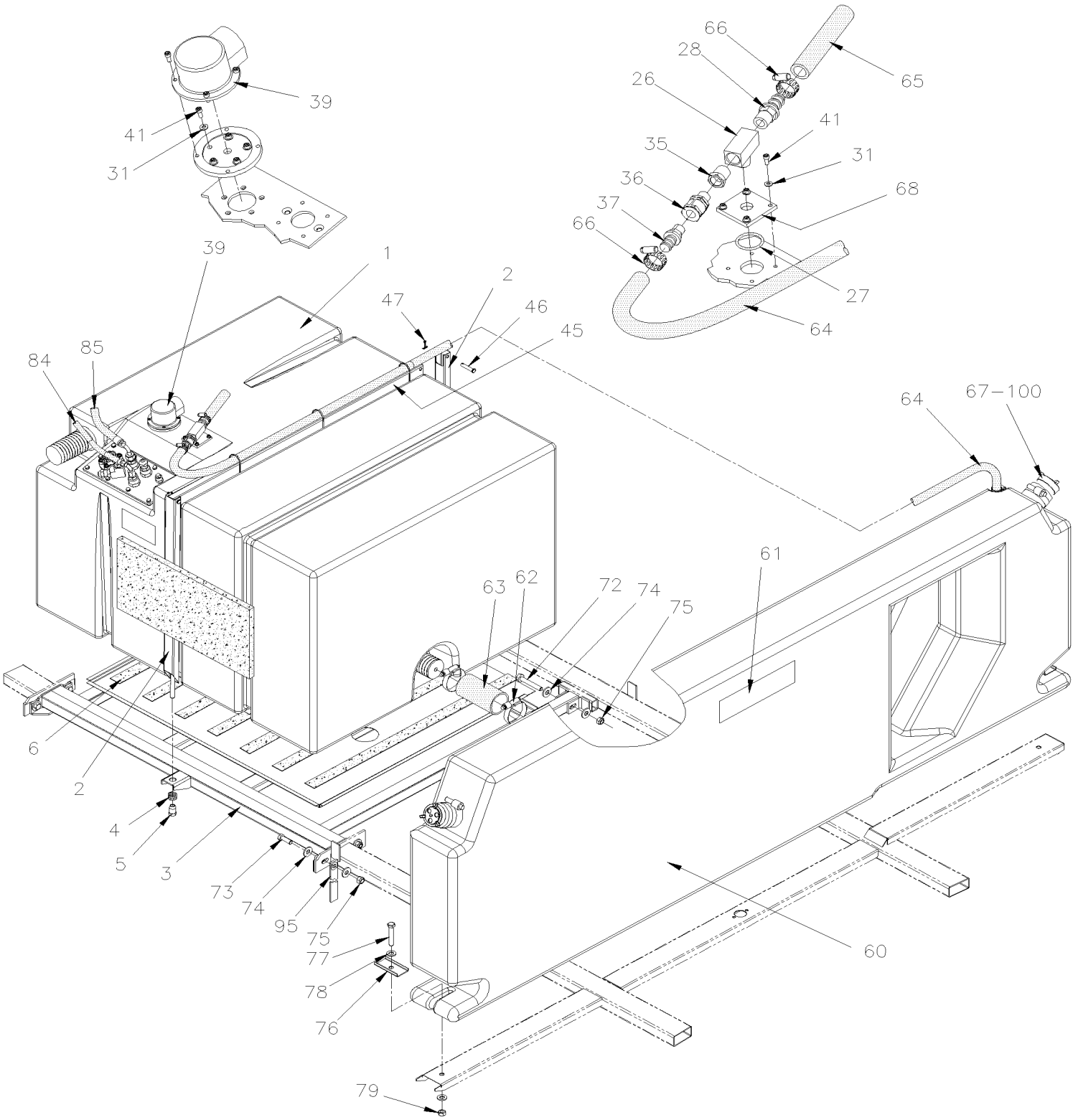

From Y-7046 To 8-9339		Date:07/2024	PAGE:Y2-0305-01
FUEL TANK PLASTIC 180 & 70 GALLONS			

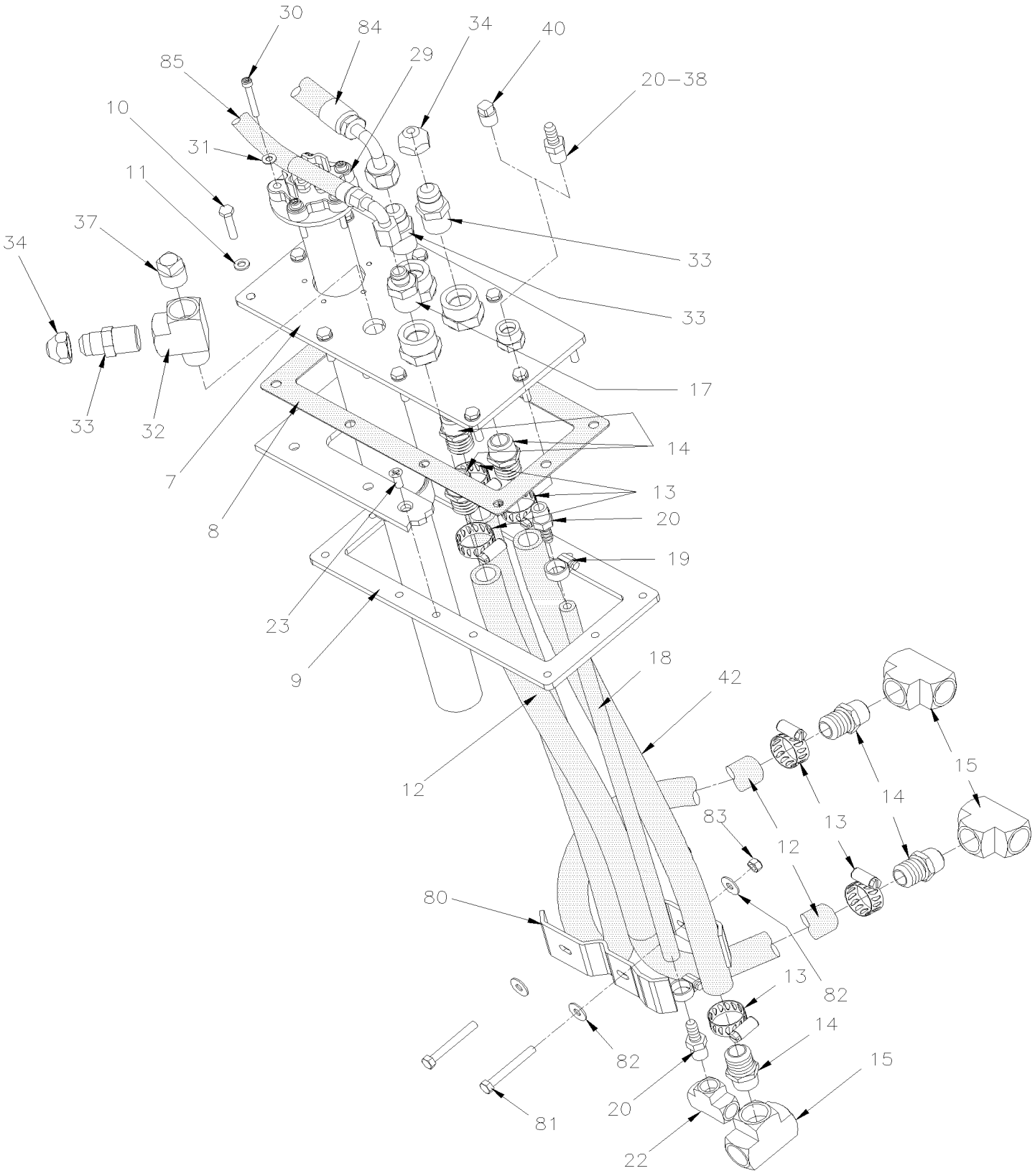

From Y-7046 To 8-9339		Date:07/2024	PAGE:Y2-0305-01

FUEL TANK PLASTIC 180 & 70 GALLONS

Item#	Part	Description	XLII 45	XLII MTH40	XLII MTH45	XLII MTH45E	NOTES
1	032015	FUEL TANK / 180 GALLONS US To 2-7739		1		1	
. NS	032361	. ADAPTOR DRAIN PLUG To 2-7739		1		1	
. NS	032362	. O-RING DRAIN PLUG To 2-7739		1		1	
1	032480	FUEL TANK / 180 GALLONS US From 2-7740		1		1	
2	032095	HOLDING STRAP To 3-7990		2		2	A
2	032506	ATTACHMENT ASSY 722MM From 3-7991		2		2	
3	032017	REMOVABLE FLOOR To 5-8607		1		1	
3	032608	REMOVABLE FLOOR From 5-8608				1	
NS	032091	BOTTOM PANEL		1		1	
4	502210	SPRING COMPRESSION / .975 O.D. x 1.250 x .125 To 5-8574		2		2	
4	502932	SPRING COMPRESSION / SS .975 O.D. x 1.250 x .125 From 5-8575				2	
5	031930	NUT HEX SPECIAL M12-1.75 ST To 5-8574		2		2	
5	032607	NUT HEX SPECIAL M12-1.75 SS From 5-8575				2	
6	506758	TAPE RUB ADH1 NEO 1/16"X 1 1/2"X50'		AR		AR	
NS	506757	TAPE RUB ADH1 NEO 3/4" x 10" x 25 1/2" / BLACK 1220		1		1	
NS	506007	TAPE RUB ADH1 CC NEO 3/4" x 1" x 10' / BLACK 1220		AR		AR	
7	032090	MAIN PLATE		1		1	
8	032096	GASKET		1		1	
9	032092	INTERIOR FRAME		1		1	
10	502686	SCREW CAP HEX M6-1.0x30 SS BK		10		10	
11	5001392	WASHER FL 6.0x12.0x1.5 COP		10		10	
12	531417	HOSE / 2556 / #10 X 48"		1		1	
13	504019	HOSE CLAMP / 9/16"-1"1/16 SS / HS-10		2		2	
14	501942	MALE CONNECTOR / PUSH-LOK FITTING / 1/2NPT-Mx#10 BR		2		2	
15	501472	FEMALE UNION TEE / PIPE FITTING / 1/2NPT-Fx1/2NPT-Fx1/2NPT-F BR		1		1	
17	501930	MALE CONNECTOR / JIC 37° FITTING / #6JIC-Mx1/2NPT-M STL		1		1	
18	531444	HOSE / 2556 / #4 X 18 1/2"		1		1	
19	504014	HOSE CLAMP / 1/4"-5/8" SS / HM-4		2		2	
20	507602	MALE CONNECTOR / PUSH-LOK FITTING / 1/4NPT-Mx#4 BR		4		4	
22	501337	FEMALE UNION TEE / PIPE FITTING / 1/4NPT-Fx1/4NPT-Fx1/4NPT-F BR		1		1	
23	5001198	SCREW MA FL PH M6-1.0x16 Z050		2		2	
25	531443	GASKET / VALVE CONTROL LEVEL		1		1	
26	507556	MALE BRANCHE TEE / PIPE FITTING / 1/2NPT-Fx1/2NPT-Fx1/2NPT-M BR		1		1	
27	507356	O-RING		1		1	
28	507605	MALE CONNECTOR / HOSE BARB FITTING / #12x1/2NPT-M BR		1		1	
29	531387	SENSOR, FUEL LEVEL / 24"		1		1	
. NS	531419	. GASKET, FUEL SENSOR		1		1	
30	5011135	SCREW CAP HEXS #10-24x1 1/2 N500		5		5	
31	500593	WASHER FL .200x.437x.036 BR		5		5	
32	501473	MALE RUN TEE / PIPE FITTING / 1/2NPT-Mx1/2NPT-Fx1/2NPT-F BR		1		1	
33	501616	MALE CONNECTOR / SAE 45º FITTING / #8FL-Mx1/2NPT-M BR		2		2	
34	501053	CAP NUT / SAE 45º FITTING / #8FL-F BR		1		1	

From Y-7046 To 8-9339		Date:07/2024	PAGE:Y2-0305-01

FUEL TANK PLASTIC 180 & 70 GALLONS

Item#	Part	Description	XLII 45	XLII MTH40	XLII MTH45	XLII MTH45E	NOTES
35	501534	BUSHING REDUCER / PIPE FITTING / 1/2NPT-Mx3/8NPT-F BR		1		1	
36	530042	CHECK VALVE 3/8 NPT		1		1	
37	501949	MALE CONNECTOR / PUSH-LOK FITTING / 3/8NPT-Mx#8 BR		1		1	
38	5011064	MALE CONNECTOR / HOSE BARB FITTING / #3x1/4NPT-M BR		1		1	
39	530156	VALVE PRESSURE		1		1	
. NS	531427	. GASKET / (SMALL)		1		1	
. NS	531428	. GASKET / (LARGE)		1		1	
41	500143	SCREW CAP HEXS #10-24x1/2 N500		5		5	
42	531445	HOSE / 2556 / #10 X 18 1/2"		1		1	
45	032508	TRANSVERSAL BAR 985MM From 3-7991		1		1	
46	502121	PIN, CLEVIS 3/8 x 1.625 BZC From 3-7991		2		2	
47	502102	PIN, COTTER 1/8 x 1 From 3-7991		2		2	
60	032194	FUEL TANK / 70 GALLONS US To 6-8805		1		1	
. NS	032147	. FILLING TUBE STRAIGHT To 6-8805		2		2	
60	032605	FUEL TANK / 70 GALLONS US From 6-8806 To 7-9035				1	
. NS	032147	. FILLING TUBE STRAIGHT From 6-8806 To 7-9035				2	
60	032705	FUEL TANK / 70 GALLONS US From 7-9036				1	
. NS	032147	. FILLING TUBE STRAIGHT From 7-9036				1	
. NS	030003	. FILLING TUBE WITH 145 DEG / BEND From 7-9036				1	
61	032178	DECAL "CAUTION"		1		1	
62	504562	HOSE CLAMP / 2"3/4-3"5/8 / C.T. 350		2		2	
63	032177	HOSE #40 150MM		1		1	
64	032210	HOSE #8 1090MM		1		1	
65	032166	HOSE #12 120"		1		1	
NS	504637	CABLE TIE / 3/16" x 13"		4		4	
66	504021	HOSE CLAMP / 11/16"-1"1/2 SS / HS-16		1		1	
67	531424	FUEL FILLING CAP / SCREW TYPE CAP		2		2	
. NS	530133	. REPLACEMENT GASKET FOR 2" FEMALE CAP		1		1	
68	032204	SPIRACLE PLATE		1		1	
68	531443	GASKET / VALVE CONTROL LEVEL		1		1	
69	501316	BUSHING REDUCER / PIPE FITTING / 1/2NPT-Mx1/4NPT-F BR		1		1	
70	502737	SCREW CAP HEX M6-1.0x25 SS BK		2		2	
71	502570	WASHER LO SPT 6.1x11.8x1.6 SS		2		2	
72	5001862	SCREW CAP HEX M12-1.75x70 G10.9 N500		2		2	
73	500806	SCREW CAP HEX M12-1.75X35 G10.9 G500		8		8	
74	500211	WASHER FL .531x1.250x.125 N500		16		16	
75	500811	NUT HEX STO M12-1.75 G500		8		8	
76	032149	FIXING PLATE		2		2	
77	5001392	WASHER FL 6.0x12.0x1.5 COP		10		10	
78	500958	WASHER FL .531x1.062x.095 SS		2		2	
79	500875	NUT HEX M12-1.75 SS		2		2	
80	032240	HOLDING PLATE / TO HOLD TUBE		2		2	

From Y-7046 To 8-9339		Date:07/2024	PAGE:Y2-0305-01

FUEL TANK PLASTIC 180 & 70 GALLONS

Item#	Part	Description	XLII 45	XLII MTH40	XLII MTH45	XLII MTH45E	NOTES
81	502656	SCREW CAP HEX M6-1.0x50 SS		2		2	
82	500411	WASHER FL .260x.697x.050 SS		2		2	
83	502511	NUT HEX NYRT M6-1.0 Z050		2		2	
84	032183	HOSE ASSY / #8 5982MM To 3-8164		1		1	
84	033229	HOSE ASSY / #8 5982MM To 3-8164		1		1	B
84	032511	HOSE ASSY / #8 5150MM From 4-8165 To 4-8346		1		1	
84	032554	HOSE ASSY / #8 5225MM From 5-8346 To 7-8932		1		1	
84	032699	HOSE ASSY / #8 5764MM From 7-8933		1		1	
85	032184	HOSE ASSY / TO FUEL TANK / #6 7440MM		1		1	
85	033230	HOSE ASSY / TO FUEL TANK / #6 7440MM		1		1	B
95	505056	ANTISTATIC STRAP / UNDER STRUCTURE		1		1	
96	401877	DECAL / FUEL CAPACITY 250 U.S. / INST. FILLIN		1		1	
100	**Y2-1875-00**	**FUEL TANK FILLING DOOR**					
NS	032509	KIT, RETROFIT FUEL TANK STRAP From Y-7046 To 3-7990		1		1	
. NS	IS-02059	. SEE INSTRUCTION SHEET From Y-7046 To 3-7990		1		1	
		A) FOR PRODUCT IMPROVMENT USE KIT #032509 FOR VEHICULE Up to 3-7990					
		B) SERVICE ONLY					

From Y-7046 To 8-9339		Date:07/2024	PAGE:Y2-0310-00
FUEL HOSE - INSTALLATION			

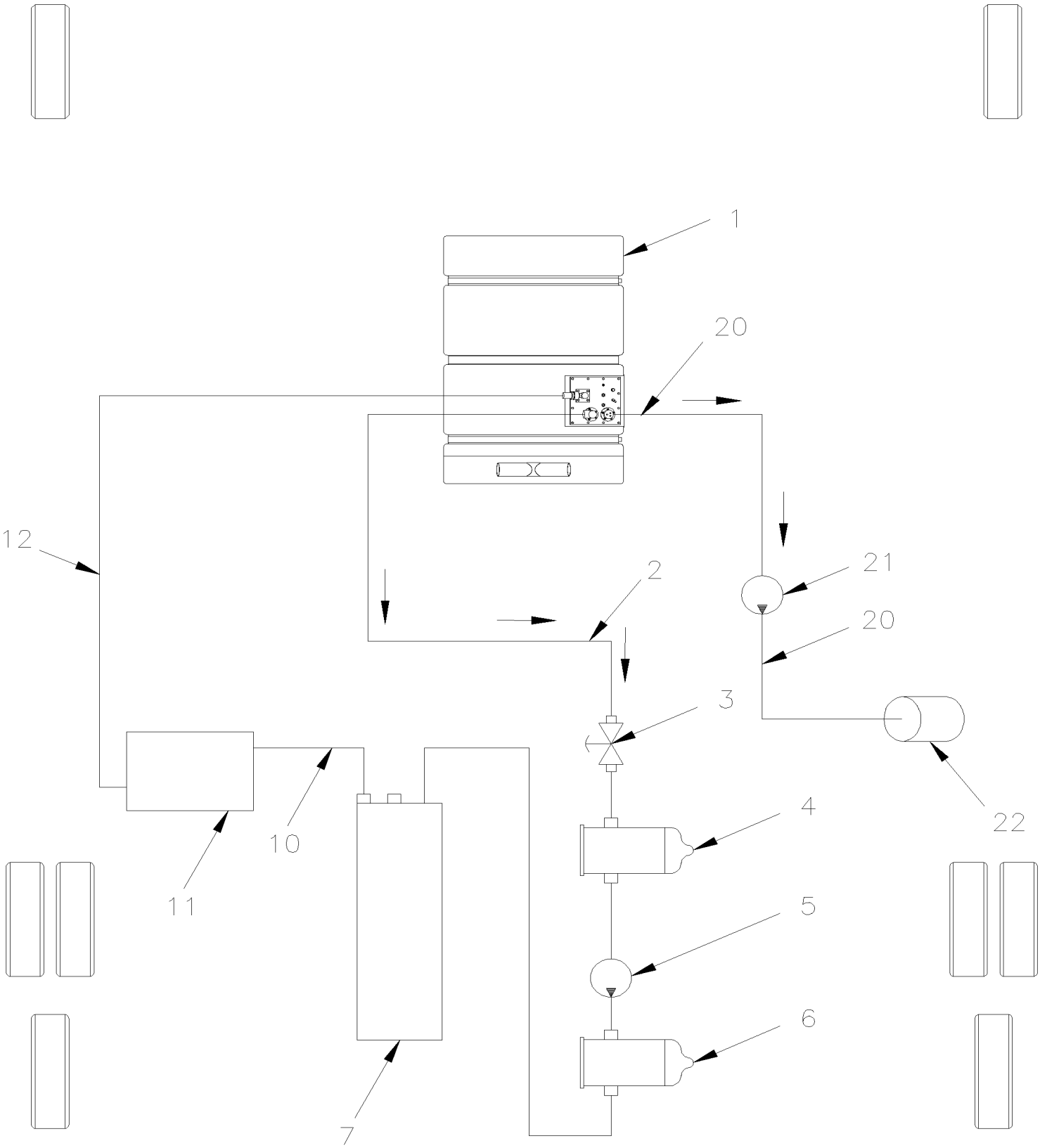

From Y-7046 To 8-9339		Date:07/2024	PAGE:Y2-0310-00

FUEL HOSE - INSTALLATION

Item#	Part	Description	XLII 45	XLII MTH40	XLII MTH45	XLII MTH45E	NOTES
1	**Y2-0305-00**	**FUEL TANK PLASTIC 208 GALLONS**					
1	**Y2-0305-01**	**FUEL TANK PLASTIC 180 & 70 GALLONS**					
2	032183	HOSE ASSY / #8 5982MM		1		1	
2	033229	HOSE ASSY / #8 5982MM		1		1	A
2	032098	HOSE ASSY / #8 6632MM	1		1		
2	033222	HOSE ASSY / #8 6632MM	1		1		A
3	530096	BALL VALVE 1/2" NPT 1/2 NPT F x 1/2 NPT F	1	1	1	1	
4	530052	FILTER ASSY PRIMARY	1	1	1	1	
5	N.S.P.	FUEL PUMP / SUPPLY W/MOTOR	1				2
6	530051	FILTER ASSY SECONDARY	1	1	1	1	
		ENGINE CYLINDER HEAD					
10	032137	HOSE ASSY / FROM CYLINDER HEAD / #6 2009MM	1		1		
10	033228	HOSE ASSY / FROM CYLINDER HEAD / #6 2009MM	1		1		A
10	032185	HOSE ASSY / FROM CYLINDER HEAD / #6 1910MM		1		1	
10	033231	HOSE ASSY / FROM CYLINDER HEAD / #6 1910MM		1		1	A
11	**Y2-0316-00**	**FUEL COOLER - INSTALLATION**					
11	**Y2-0316-01**	**FUEL COOLER - INSTALLATION**					
12	032097	HOSE ASSY / #6 7991MM	1		1		
12	033221	HOSE ASSY / #6 7991MM	1		1		A
12	032184	HOSE ASSY / TO FUEL TANK / #6 7440MM		1		1	
12	033230	HOSE ASSY / TO FUEL TANK / #6 7440MM		1		1	A
		. . . . FOLLOWING PARTS ARE USED WITH					
		. . . . WATER HEATER					
20	503411	HOSE / 2556 / #4 X 50'	AR				
NS	504230	HOSE CLAMP / 3/8"-7/8" SS / HS-6	4				
21	871037	FILTER, FUEL	1				
NS	871038	SUPPORT, FILTER FUEL	1				
22	**871036**	**WATER HEATER - "WEBASTO" 80,000 B.T.U.**					
22	**871085**	**WATER HEATER - "WEBASTO" 45,000 B.T.U.**					
22	**871097**	**WATER HEATER - "ESPAR" 41,000 B.T.U.**					
22	**871202**	**WATER HEATER - "SPHEROS" 100,000 B.T.U.**					
22	**871100**	**WATER HEATER - "PROHEAT" 80,000 B.T.U.**					
22	**871329**	**WATER HEATER - "PROHEAT" 80,000 B.T.U.**					
		A) SERVICE ONLY					
		2) NOT SOLD BY PREVOST (SEE MANUFACTURING PART NUMBER AT END OF DESCRIPTION LINE)					

From Y-7046 To 8-9339		Date:07/2024	PAGE:Y2-0311-00
FUEL FILTER - PRIMARY & SECONDARY			

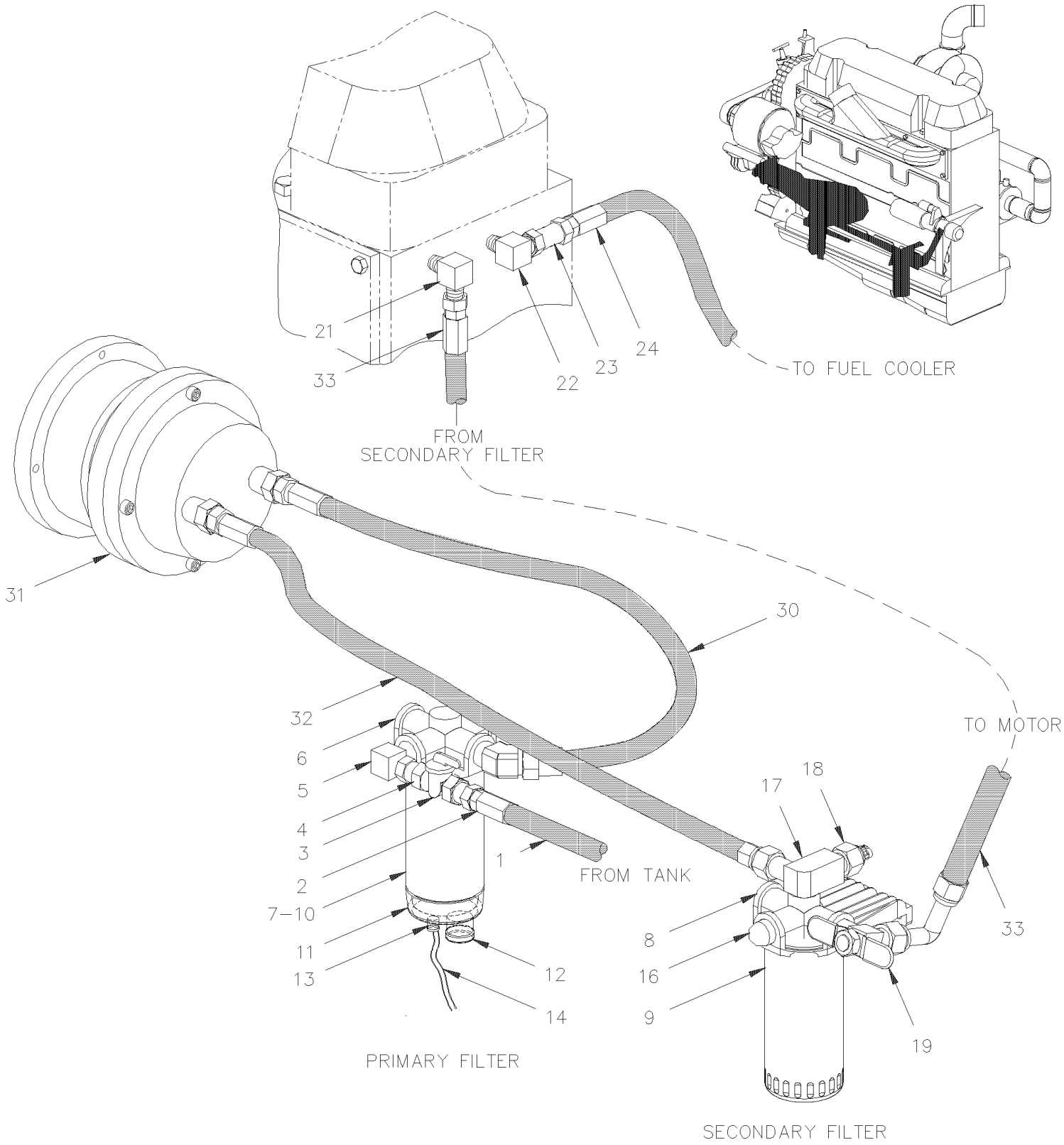

From Y-7046 To 8-9339		Date:07/2024	PAGE:Y2-0311-00

FUEL FILTER - PRIMARY & SECONDARY

Item#	Part	Description	XLII 45	XLII MTH40	XLII MTH45	XLII MTH45E	NOTES
1	032098	HOSE ASSY / #8 6632MM To 3-8164	1		1		A
1	033222	HOSE ASSY / #8 6632MM To 3-8164	1		1		A B
1	032499	HOSE ASSY / #8 6000MM From 4-8165 To 4-8345	1		1		A
1	032579	HOSE ASSY / #8 6125MM From 5-8346 To 7-8932	1		1		A
1	033237	HOSE ASSY / #8 6125MM From 5-8346 To 7-8932	1		1		A B
1	032652	HOSE ASSY / #8 6500MM From 7-8933			1		
1	033238	HOSE ASSY / #8 6500MM From 7-8933			1		B
1	032183	HOSE ASSY / #8 5982MM To 3-8164		1		1	A
1	033229	HOSE ASSY / #8 5982MM To 3-8164		1		1	A B
1	032511	HOSE ASSY / #8 5150MM From 4-8165 To 4-8345		1		1	
1	032554	HOSE ASSY / #8 5225MM From 5-8346 To 7-8932		1		1	
1	032699	HOSE ASSY / #8 5764MM From 7-8933				1	
2	501034	MALE CONNECTOR / SAE 45º FITTING / #10FL-Mx1/2NPT-M BR To 3-8164	1	1	1	1	
2	501612	MALE ELBOW 90º / SAE 45º FITTING / #8FL-Mx1/2NPT-M BR From 4-8165	1	1	1	1	
3	530096	BALL VALVE 1/2" NPT 1/2 NPT F x 1/2 NPT F	1	1	1	1	
4	501322	NIPPLE HEX / PIPE FITTING / 3/8NPT-Mx3/8NPT-Mx1 13/32 BR	1	1	1	1	
NS	501534	BUSHING REDUCER / PIPE FITTING / 1/2NPT-Mx3/8NPT-F BR	1	1	1	1	
5	501333	STREET ELBOW 90º / PIPE FITTING / 3/8NPT-Mx3/8NPT-F BR To 3-8164	1	1	1	1	H
5	5011260	FEMALE CONNECTOR SWIVEL / PUSH-LOK FITTING / #8FL-Fx#6 BR From 4-8165	1	1	1	1	H
NS	501305	PLUG SQUARE HEAD / PIPE FITTING / 3/8NPT-M BR	AR	AR	AR	AR	
6	530052	FILTER ASSY PRIMARY	1	1	1	1	
NS	510157	. COVER / W/PRIMARY FILTER	1	1	1	1	
7	510137	. FUEL FILTER, CARTRIDGE / T-915 / PRIMARY	1	1	1	1	
8	530051	FILTER ASSY SECONDARY	1	1	1	1	
8	510344	. COVER / W/SECONDARY FILTER	1	1	1	1	
9	510128	. FUEL FILTER, CARTRIDGE / TP-916 / SECONDARY To 5-8358	1	1	1	1	
9	510794	. FUEL FILTER, CARTRIDGE / / SECONDARY From 5-8359	1	1	1	1	
10	531390	CARTRIDGE / W/WATER SEPARATOR FILTER	1	1	1	1	C
11	531389	BOWL PLASTIC	1	1	1	1	
12	531397	. DRAIN VALVE & SEAL	1	1	1	1	
NS	531398	. O-RING	1	1	1	1	
13	531391	. SENSOR / WATER LEVEL	1	1	1	1	
14	063715	CABLE ASSY / ENGINE ACC. & WATER SEPARATOR	1	1	1	1	
NS	561566	. CONNECTOR / WEATHER PACK / PH 2C / BLACK / PED 12010973	1	1	1	1	
NS	561565	. CABLE SEAL / GREEN / PED 15324982	2	2	2	2	
NS	561567	. PIN TERMINAL / 20-18 / PED 12089040	2	2	2	2	
NS	560483	CLAMP / 7/8" I.D.	1	1	1	1	G
16	950249	SCHRADER VALVE 1/4NPT-M To 3-8031	1	1	1	1	
16	504706	NIPPLE / QUICK DISCONNECT "SAE J1502" / #4x1/4NPT-M STL W/DUST CAP From 3-8032	1	1	1	1	
. NS	195533	. DUST CAP / QUICK DISCONNECT "SAE J1502" / #4 From 3-8032	1	1	1	1	
17	N.S.P.	ELBOW ADAPTOR FUEL PRESSURE / (23505246-247) To 3-8164	1	1	1	1	2
18	N.S.P.	FUEL TEMP SENSOR / (23518092) To 3-8164	1	1	1	1	2

From Y-7046 To 8-9339		Date:07/2024	PAGE:Y2-0311-00

FUEL FILTER - PRIMARY & SECONDARY

Item#	Part	Description	XLII 45	XLII MTH40	XLII MTH45	XLII MTH45E	NOTES
19	N.S.P.	ELBOW BALL VALVE / (235.....) To 3-8164	1	1	1	1	2
21	N.S.P.	ELBOW / (23513205) To 3-8164	1	1	1	1	2
22	N.S.P.	ELBOW / RESTRICTION / (8929725)	1	1	1	1	2
23	531415	CHECK VALVE To 3-8164	1	1	1	1	
23	7770472	CHECK VALVE From 4-8165	1	1	1	1	
24	**Y2-0316-00**	**FUEL COOLER - INSTALLATION To 3-8164**					
24	**Y2-0316-01**	**FUEL COOLER - INSTALLATION From 4-8165**					
30	N.S.P.	HOSE ASSY / PRIMARY & FUEL PUMP / (23509154) To 3-8164	1	1	1	1	2
31	N.S.P.	FUEL PUMP / SUPPLY W/MOTOR (23517845) To 3-8164	1	1	1	1	2
32	N.S.P.	HOSE ASSY / FUEL PUMP & SECONDARY/ (23505202) To 3-8164	1	1	1	1	2
33	N.S.P.	HOSE ASSY / SECONDARY & ENGINE / (8929841) To 3-8164	1	1	1	1	2
		A) THOSE HOSES COME FROM BULKHEAD CONNECTOR TO FUEL TANK					
		B) SERVICE ONLY					
		C) FOR FILTER CARTRIDGE WATER SPERATOR W/O PROB SENSOR & PLASTIC BOWL USE PART # 531407					
		G) FOR CABLE					
		H) W/PRIMARY					
		2) NOT SOLD BY PREVOST (SEE MANUFACTURING PART NUMBER AT END OF DESCRIPTION LINE)					

From Y-7046 To 8-9339		Date:07/2024	PAGE:Y2-0311-15
FUEL FILTER / "PRO 382"			

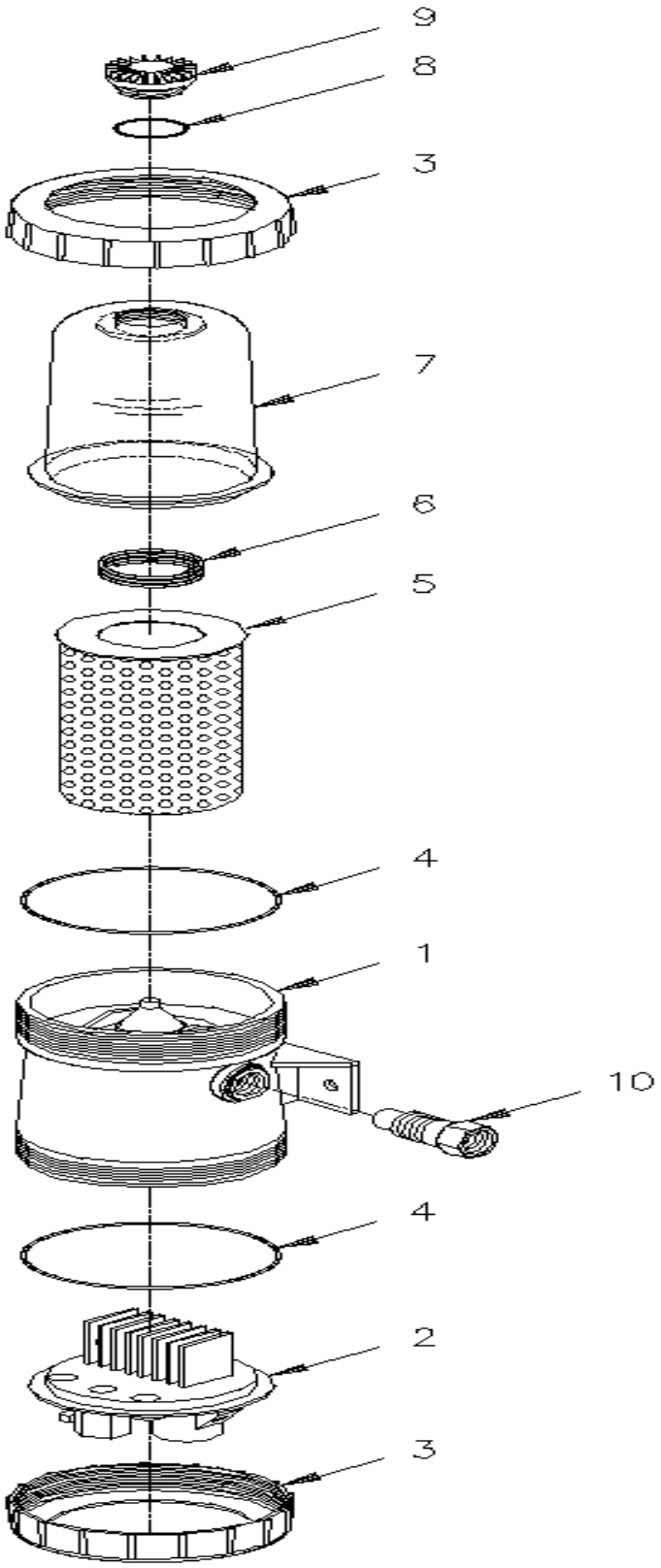

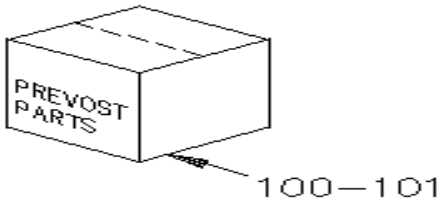

From Y-7046 To 8-9339		Date:07/2024	PAGE:Y2-0311-15

FUEL FILTER / "PRO 382"

Item#	Part	Description	XLII 45	XLII MTH40	XLII MTH45	XLII MTH45E	NOTES
	531448	FILTER ASSY "FUEL PRO 382" / W/HEATER ELEMENT To 4-8341	1	1	1	1	
	531468	FILTER ASSY "FUEL PRO 382" / WITHOUT HEATER ELEMENT From 4-8342	1	1	1	1	
1	N.S.S.	. BODY CASTING	1	1	1	1	1
2	N.S.S.	. FLUID HEATER BASE	1	1	1	1	1
3	531441	. COLLAR, COVER	2	2	2	2	
4	N.S.S.	. SEAL COVER	2	2	2	2	1
5	531437	. FILTER FUEL ELEMENT / To 5-8358	1	1	1	1	
5	510795	. FILTER FUEL, ELEMENT / W/"PRO FILTER" From 5-8359	1	1	1	1	
6	531440	. SPRING	1	1	1	1	
7	531438	. COVER, FILTER ELEMENT	1	1	1	1	
8	N.S.S.	. SEAL CAP VENT	1	1	1	1	1
9	531439	. CAP VENT	1	1	1	1	
10	N.S.P.	. CHECK VALVE / (23518325)	1	1	1	1	2
NS	500190	SCREW CAP HEX 3/8-16x3/4 G5 Z050	2	2	2	2	
NS	5001396	NUT SPR FL REC 3/8-16 .69x.91	2	2	2	2	
NS	500935	WASHER FL .390x1.500x.083	2	2	2	2	
NS	500265	NUT HEX STO 3/8-16 Z050	2	2	2	2	
NS	032478	REINFORCEMENT "U" SHAPE 381MM From 1-7709	2				B
100	531442	O-RING SET	1	1	1	1	A
. A	DAV380048	. ANTI TAMPER SEAL	1	1	1	1	A
. B	3946027	. O-RING	1	1	1	1	A
101	N.S.P.	CHECK VALVE REPAIR KIT / (23518326)	1	1	1	1	2
		A) INCLUDES ITEMS # 4 AND 8					
		B) LOCATED IN BATTERIES COMPARTMENT					
		1) NOT SOLD SEPARATELY					
		2) NOT SOLD BY PREVOST (SEE MANUFACTURING PART NUMBER AT END OF DESCRIPTION LINE)					

From Y-7046 To 8-9339		Date:07/2024	PAGE:Y2-0312-00
FUEL PUMP - AUXILIARY			

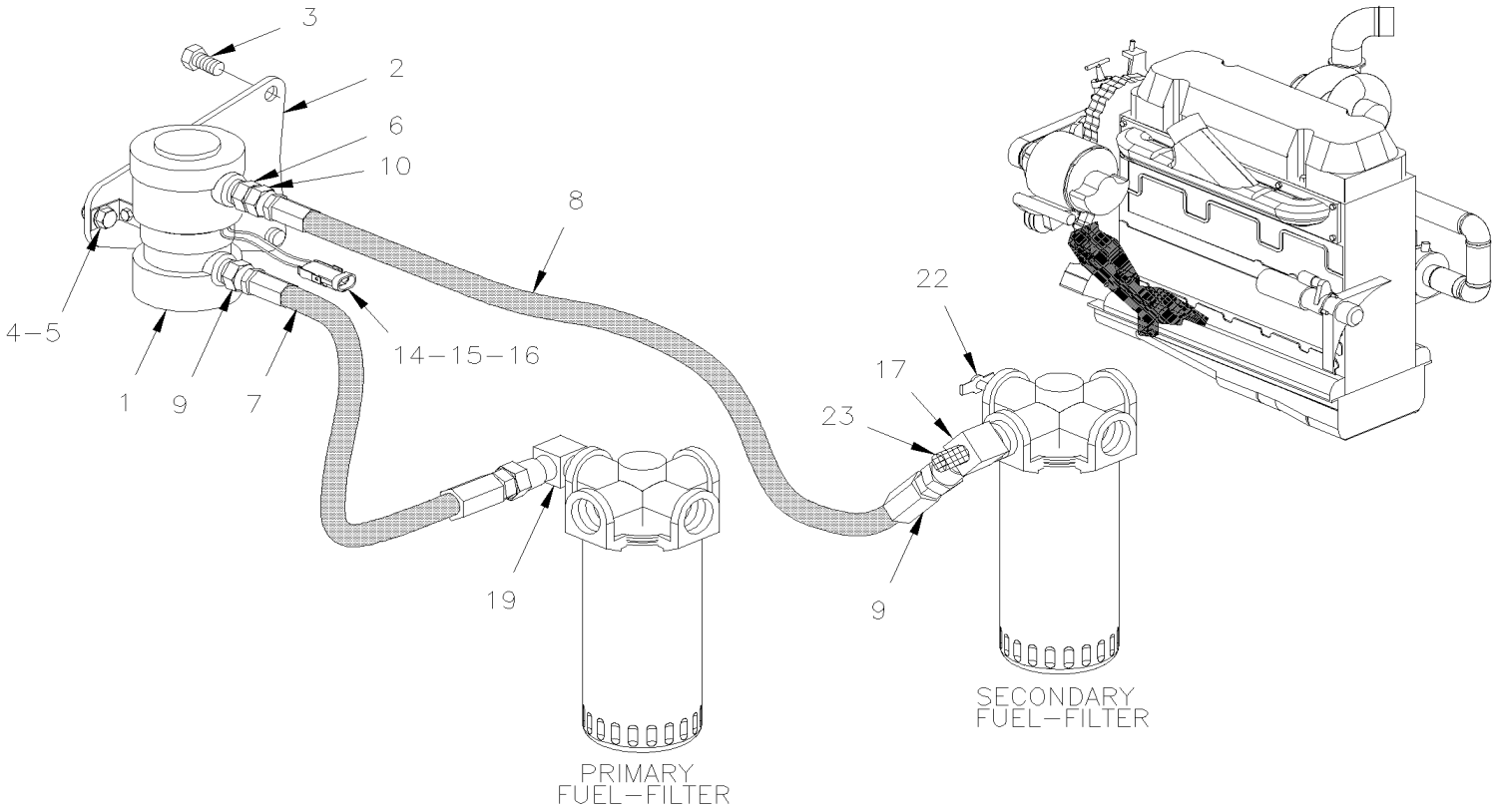

From Y-7046 To 8-9339		Date:07/2024	PAGE:Y2-0312-00

FUEL PUMP - AUXILIARY

Item#	Part	Description	XLII 45	XLII MTH40	XLII MTH45	XLII MTH45E	NOTES
1	531388	FUEL PUMP ELECTRICAL	1	1	1	1	
2	032254	SUPPORT To 3-8164	1	1	1	1	
3	502790	SCREW CAP HEX M8-1.25x20 G8.8 Z050 To 3-8164	2	2	2	2	
3	502651	SCREW CAP HEX M8-1.25x35 G8.8 Z050 To 3-8164	2	2	2	2	
3	502830	SCREW CAP HEX M6-1.0x20 G8.8 N500 From 4-8165	2	2	2	2	
4	500874	WASHER FL 8.4x17.0x1.6 Z050 To 3-8164	4	4	4	4	
4	502889	WASHER LO SPT 8.1x12.7x2.0 N500 From 4-8165	4	4	4	4	
4	500877	WASHER FL .250x.562x.065 N500 From 4-8165	4	4	4	4	
5	500868	NUT HEX NYRT M8-1.25 Z050 To 3-8164	4	4	4	4	
5	500232	NUT HEX M6-1.0 ZG603 From 4-8165	4	4	4	4	
6	501749	NIPPLE REDUCER HEX / PIPE FITTING / 3/8NPT-Mx1/4NPT-Mx1 13/32 BR To 3-8164	1	1	1	1	
6	5011253	SWIVEL NUT MALE CONNECTOR / JIC 37° FITTING / #6JIC-Fx1/4NPT-M STL From 4-8165	1	1	1	1	
7	032266	HOSE ASSY / #6 267MM To 3-8164	1	1	1	1	
7	030971	HOSE ASSY / #6 220MM From 4-8165	1	1	1	1	
8	032002	HOSE ASSY / #8 320MM To 3-8164	1	1	1	1	
8	032021	HOSE ASSY / #8 212MM To 3-8164	1	1	1	1	
8	032267	HOSE ASSY / #6 756MM To 3-8164	1	1	1	1	
8	032275	HOSE ASSY / #6 756MM To 3-8164	1	1	1	1	
8	030972	HOSE ASSY / #6 255MM From 4-8165	1	1	1	1	
9	501687	MALE CONNECTOR / JIC 37° FITTING / #6JIC-Mx1/4NPT-M STL	1	1	1	1	
10	531415	CHECK VALVE	1	1	1	1	
14	561566	CONNECTOR / WEATHER PACK / PH 2C / BLACK / PED 12010973	1	1	1	1	
15	561568	PIN TERMINAL / 16-14 / PED 12089305	2	2	2	2	
16	561565	CABLE SEAL / GREEN / PED 15324982	2	2	2	2	
17	501338	MALE RUN TEE / PIPE FITTING / 1/4NPT-Mx1/4NPT-Fx1/4NPT-F BR To 3-8164	1	1	1	1	
17	501695	MALE ELBOW 90° / JIC 37° FITTING / #6JIC-Mx1/4NPT-M STL From 4-8165	1	1	1	1	
19	5011066	MALE ELBOW 90° / JIC 37° FITTING / #6JIC-Mx3/8NPT-M STL	1	1	1	1	
22	501129	EXTERNAL SEAL DRAIN 1/4 NPT	1	1	1	1	
NS	032258	KIT INSTALLATION FUEL PUMP TO USE W/FUEL PRO FILTER To 3-8164	1	1	1	1	
. NS	IS-97114	. SEE INSTRUCTION SHEET To 3-8164	1	1	1	1	
NS	032257	KIT INSTALLATION FUEL PUMP To 3-8164	1	1	1	1	
. NS	IS-97114	. SEE INSTRUCTION SHEET To 3-8164					
NS	064825	KIT INSTALLATION PRIMER PUMP SWITCH To 3-8164	1	1	1	1	
. NS	IS-97114	. SEE INSTRUCTION SHEET To 3-8164	1	1	1	1	
23	504706	NIPPLE / QUICK DISCONNECT "SAE J1502" / #4x1/4NPT-M STL W/DUST CAP From 3-8032	1	1	1	1	
. NS	195533	. DUST CAP / QUICK DISCONNECT "SAE J1502" / #4 From 3-8032	1	1	1	1	
23	950249	SCHRADER VALVE 1/4NPT-M To 3-8031	1	1	1	1	
24	032833	KIT, RETROFIT AUX FUEL PUMP	1	1	1	1	
. NS	IS-08003	. SEE INSTRUCTION SHEET	1	1	1	1	

From Y-7046 To 3-8164		Date:07/2024	PAGE:Y2-0312-10
FUEL PRO - INSTALLATION			

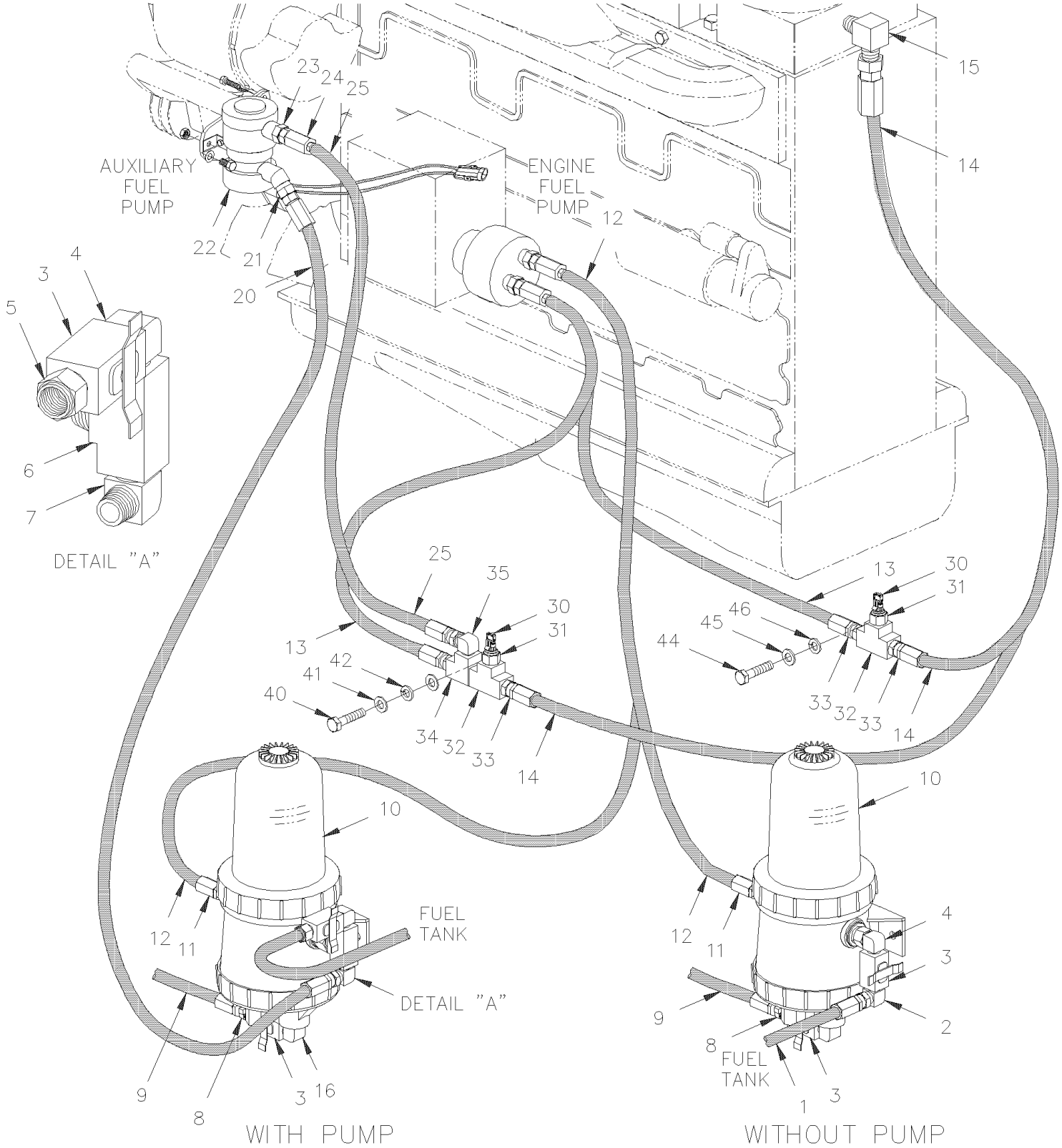

From Y-7046 To 3-8164		Date:07/2024	PAGE:Y2-0312-10

FUEL PRO - INSTALLATION

Item#	Part	Description	XLII 45	XLII MTH40	XLII MTH45	XLII MTH45E	NOTES
1	032144	HOSE ASSY / #8 6402MM	1	1	1	1	
1	033248	HOSE ASSY / #8 6402MM	1	1	1	1	A
2	5011061	MALE ELBOW 90° / JIC 37° FITTING / #8JIC-Mx1/2NPT-M STL To 1-7721	1	1	1	1	
2	501719	MALE ELBOW 90° / JIC 37° FITTING / #8JIC-Mx1/2NPT-M BR From 1-7722	1	1	1	1	
3	530096	BALL VALVE 1/2" NPT 1/2 NPT F x 1/2 NPT F	1	1	1	1	
4	501908	MALE ELBOW 90º / PIPE FITTING / 1/2NPT-Mx1/2NPT-M STL To 1-7721	1	1	1	1	
4	501713	MALE ELBOW 90º / PIPE FITTING / 1/2NPT-Mx1/2NPT-M BR From 1-7722	1	1	1	1	
5	501616	MALE CONNECTOR / SAE 45º FITTING / #8FL-Mx1/2NPT-M BR	1	1	1	1	
6	507556	MALE BRANCHE TEE / PIPE FITTING / 1/2NPT-Fx1/2NPT-Fx1/2NPT-M BR	1	1	1	1	
7	5011056	MALE ELBOW 90° / JIC 37° FITTING / #6JIC-Mx1/2NPT-M STL To 1-7721	1	1	1	1	
7	501716	MALE ELBOW 90° / JIC 37° FITTING / #6JIC-Mx1/2NPT-M BR From 1-7722	1	1	1	1	
8	507557	STREET ELBOW 90º / PIPE FITTING / 1/2NPT-Mx1/2NPT-F BR	1	1	1	1	
9	032133	HOSE ASSY / #6 740MM	1	1	1	1	
9	033227	HOSE ASSY / #6 740MM	1	1	1	1	A
9	507557	. STREET ELBOW 90º / PIPE FITTING / 1/2NPT-Mx1/2NPT-F BR	1	1	1	1	
10	**Y2-0311-15**	**FUEL FILTER / "PRO 382"**	1	1	1	1	
11	501739	MALE CONNECTOR / JIC 37° FITTING / #8JIC-Mx1/2NPT-M STL	1	1	1	1	
12	160381	HOSE ASSY / #8 737MM		1		1	
12	032270	HOSE ASSY / #8 1100MM	1		1		
13	N.S.P.	HOSE ASSY / FUEL PUMP & JUCTION / (23505202)	1	1	1	1	2
14	N.S.P.	HOSE ASSY / JUNCTION & ENGINE / (8929841)	1	1	1	1	2
15	N.S.P.	ELBOW 90° / (23513205)	1	1	1	1	2
16	501618	MALE CONNECTOR / SAE 45º FITTING / #6FL-Mx1/2NPT-M BR	1	1	1	1	
20	032276	HOSE ASSY / #6 1220MM	1	1	1	1	
21	501687	MALE CONNECTOR / JIC 37° FITTING / #6JIC-Mx1/4NPT-M STL	1	1	1	1	
22	**Y2-0312-00**	**FUEL PUMP - AUXILIARY**	1	1	1	1	
23	501749	NIPPLE REDUCER HEX / PIPE FITTING / 3/8NPT-Mx1/4NPT-Mx1 13/32 BR	1	1	1	1	
24	531415	CHECK VALVE	1	1	1	1	
25	032275	HOSE ASSY / #6 756MM	1	1	1	1	
30	N.S.P.	FUEL TEMP SENSOR / (23518092)	1	1	1	1	2
31	501314	BUSHING REDUCER / PIPE FITTING / 3/8NTP-Mx1/4NPT-F BR	1	1	1	1	
32	501527	FEMALE UNION TEE / PIPE FITTING / 3/8NPT-Fx3/8NPT-Fx3/8NPT-F BR	1	1	1	1	
33	501617	MALE CONNECTOR / SAE 45º FITTING / #6FL-Mx3/8NPT-M BR	1	1	1	1	
34	501699	MALE RUN TEE / PIPE FITTING / 3/8NPT-Mx3/8NPT-Fx3/8NPT-F BR	1	1	1	1	
35	5011066	MALE ELBOW 90° / JIC 37° FITTING / #6JIC-Mx3/8NPT-M STL	1	1	1	1	
40	502559	SCREW CAP HEX M10-1.5x25 G8.8 Z050	1	1	1	1	
41	500257	WASHER LO SPT 10.2x18.1x2.2 Z050	1	1	1	1	
42	500935	WASHER FL .390x1.500x.083	1	1	1	1	
NS	070368	SUPPORT	1	1	1	1	
NS	560481	CLAMP / 5/8" I.D.	1	1	1	1	
NS	500774	NUT WING 1/4-20 ZP	1	1	1	1	
NS	500786	NUT HEX #10-24 Z050	1	1	1	1	

From Y-7046 To 3-8164		Date:07/2024	PAGE:Y2-0312-10

FUEL PRO - INSTALLATION

Item#	Part	Description	XLII 45	XLII MTH40	XLII MTH45	XLII MTH45E	NOTES
NS	500470	WASHER LO SPT .193x.334x.047 Z050	1	1	1	1	
44	500072	SCREW CAP HEX M10-1.5x45 G10.9 Z050	1	1	1	1	
45	500257	WASHER LO SPT 10.2x18.1x2.2 Z050	1	1	1	1	
46	500935	WASHER FL .390x1.500x.083	1	1	1	1	
NS	500446	WASHER FL .531x1.250x.125 Z050	1	1	1	1	
NS	032258	KIT INSTALLATION FUEL PUMP TO USE W/FUEL PRO FILTER	1	1	1	1	
. NS	IS-97114	. SEE INSTRUCTION SHEET	1	1	1	1	
NS	064825	KIT INSTALLATION PRIMER PUMP SWITCH	1	1	1	1	
. NS	IS-97114	. SEE INSTRUCTION SHEET	1	1	1	1	
		A) SERVICE ONLY					
		2) NOT SOLD BY PREVOST (SEE MANUFACTURING PART NUMBER AT END OF DESCRIPTION LINE)					

From 4-8165 To 8-9339		Date:07/2024	PAGE:Y2-0312-11
FUEL PRO - INSTALLATION			

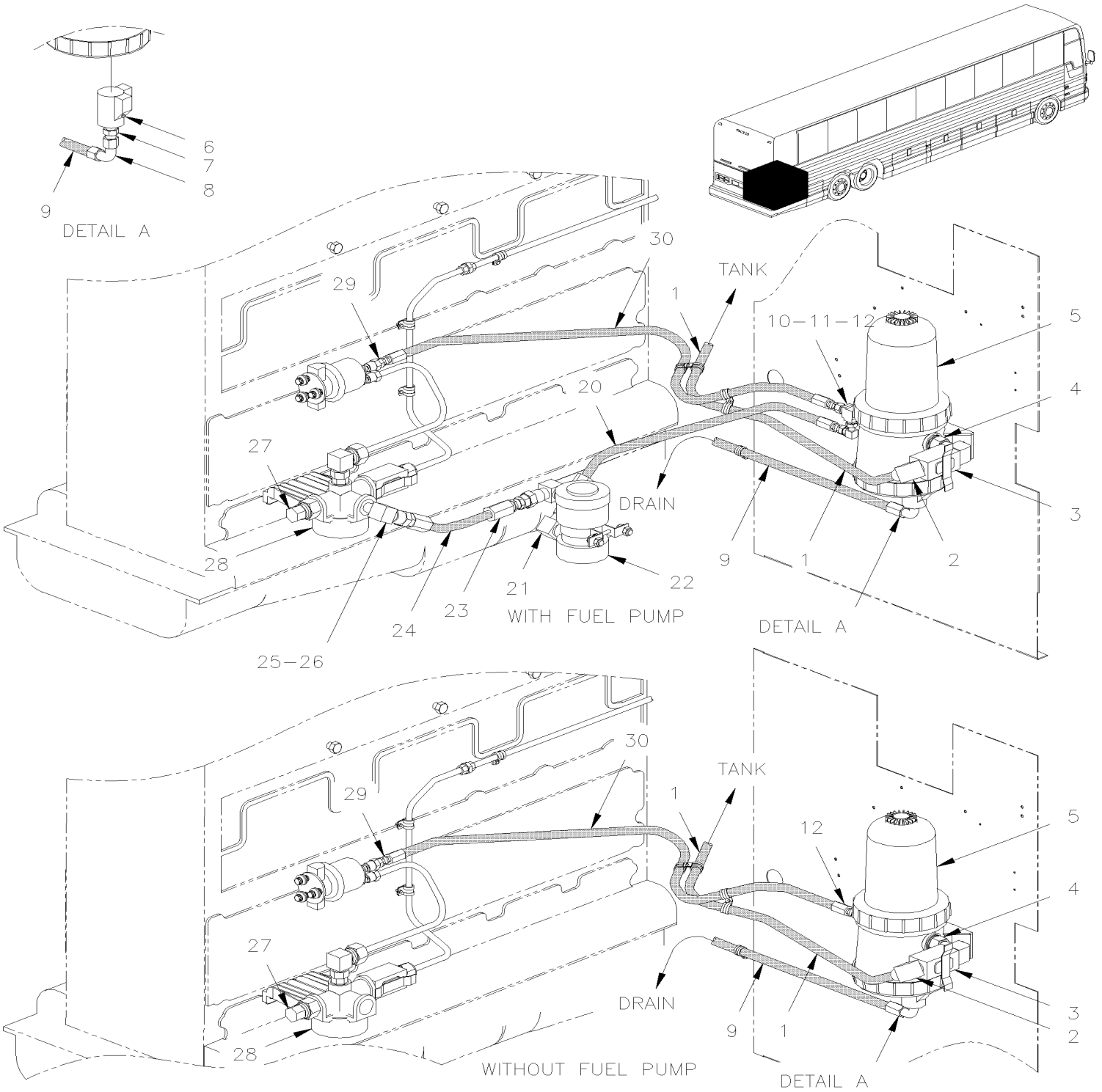

From 4-8165 To 8-9339		Date:07/2024	PAGE:Y2-0312-11

FUEL PRO - INSTALLATION

Item#	Part	Description	XLII 45	XLII MTH40	XLII MTH45	XLII MTH45E	NOTES
1	032183	HOSE ASSY / #8 5982MM		1		1	
1	033229	HOSE ASSY / #8 5982MM		1		1	B
1	032098	HOSE ASSY / #8 6632MM	1		1		
1	033222	HOSE ASSY / #8 6632MM	1		1		B
2	501612	MALE ELBOW 90º / SAE 45º FITTING / #8FL-Mx1/2NPT-M BR	1	1	1	1	
3	530096	BALL VALVE 1/2" NPT 1/2 NPT F x 1/2 NPT F	1	1	1	1	
4	501713	MALE ELBOW 90º / PIPE FITTING / 1/2NPT-Mx1/2NPT-M BR	1	1	1	1	
5	**Y2-0311-15**	**FUEL FILTER / "PRO 382"**					
6	501305	PLUG SQUARE HEAD / PIPE FITTING / 3/8NPT-M BR	2	2	2	2	
7	507557	STREET ELBOW 90º / PIPE FITTING / 1/2NPT-Mx1/2NPT-F BR	1	1	1	1	
8	501618	MALE CONNECTOR / SAE 45º FITTING / #6FL-Mx1/2NPT-M BR	1	1	1	1	
9	032133	HOSE ASSY / #6 740MM	1	1	1	1	
9	032227	FILLING CAP ASSY L.H. / SCREW TYPE CAP	1	1	1	1	B
10	501473	MALE RUN TEE / PIPE FITTING / 1/2NPT-Mx1/2NPT-Fx1/2NPT-F BR	1	1	1	1	A
11	501716	MALE ELBOW 90° / JIC 37° FITTING / #6JIC-Mx1/2NPT-M BR	1	1	1	1	A
12	501739	MALE CONNECTOR / JIC 37° FITTING / #8JIC-Mx1/2NPT-M STL	1	1	1	1	
20	032520	HOSE ASSY / #6 730MM	1				
20	032536	HOSE ASSY / #6 480MM		1	1	1	
21	501695	MALE ELBOW 90° / JIC 37° FITTING / #6JIC-Mx1/4NPT-M STL	1	1	1	1	
22	**Y2-0312-00**	**FUEL PUMP - AUXILIARY**					
23	531415	CHECK VALVE	1	1	1	1	
24	030972	HOSE ASSY / #6 255MM	1	1	1	1	
25	501687	MALE CONNECTOR / JIC 37° FITTING / #6JIC-Mx1/4NPT-M STL	1	1	1	1	
26	501338	MALE RUN TEE / PIPE FITTING / 1/4NPT-Mx1/4NPT-Fx1/4NPT-F BR	1	1	1	1	
27	504706	NIPPLE / QUICK DISCONNECT "SAE J1502" / #4x1/4NPT-M STL W/DUST CAP	1	1	1	1	
. NS	195533	. DUST CAP / QUICK DISCONNECT "SAE J1502" / #4	1	1	1	1	
28	531465	COVER "BY-PASS" / SECONDARY FILTER	1	1	1	1	
29	5011247	MALE CONNECTOR / JIC 37° FITTING / #8JIC-MxM16-1.5 ORB-M STL	1	1	1	1	
30	032270	HOSE ASSY / #8 1100MM	1				
30	032535	HOSE ASSY / #8 680MM		1	1	1	
		A) WITH FUEL PUMP ONLY					
		B) SERVICE ONLY					

From Y-7046 To 8-9339		Date:07/2024	PAGE:Y2-0315-10
ACCELERATOR PEDAL - ELECTRONIC			

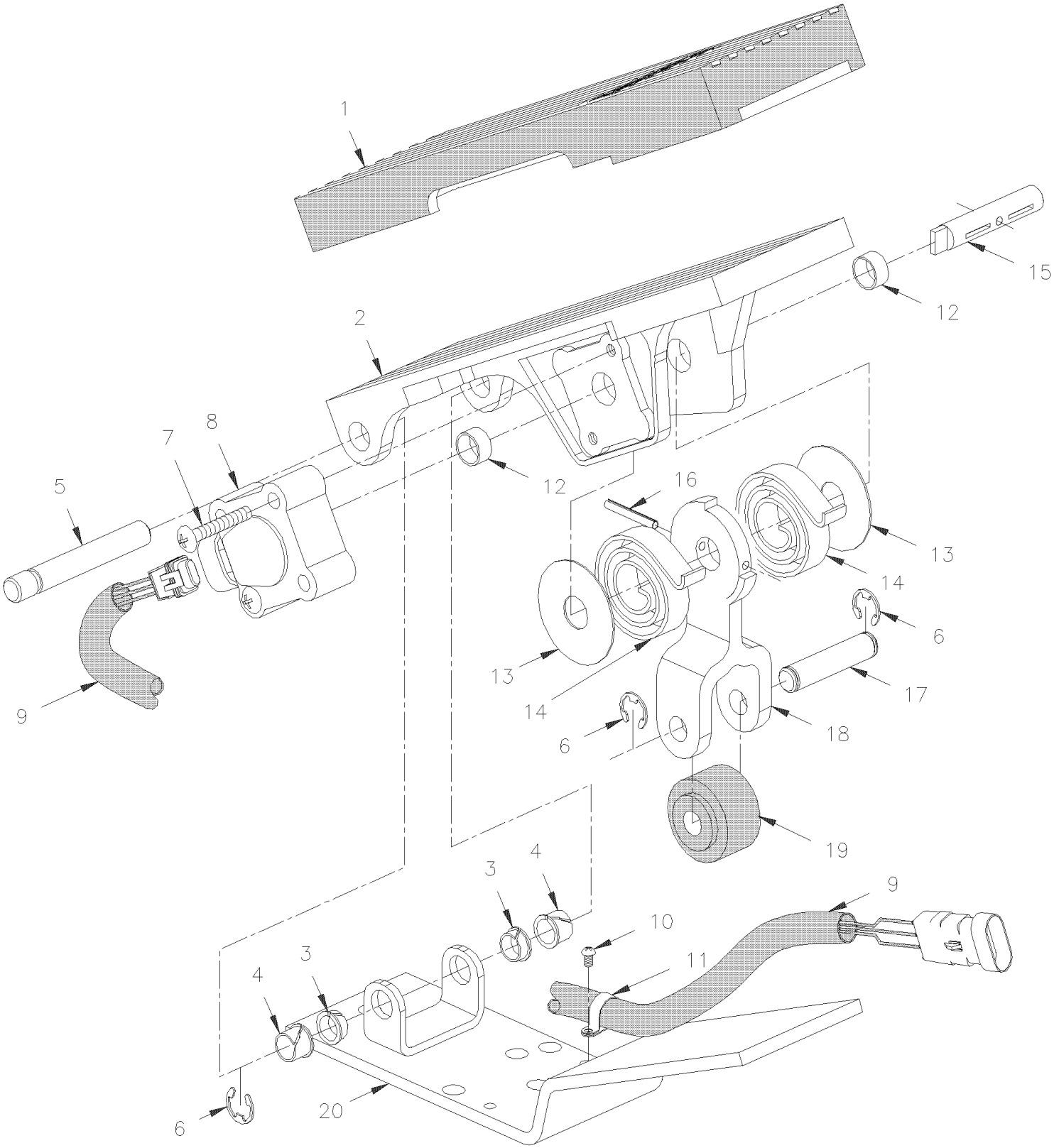

From Y-7046 To 8-9339		Date:07/2024	PAGE:Y2-0315-10

ACCELERATOR PEDAL - ELECTRONIC

Item#	Part	Description	XLII 45	XLII MTH40	XLII MTH45	XLII MTH45E	NOTES
	531455	ACCELERATOR PEDAL ASSY	1	1	1	1	
1	531401	. THREADLE COVER	1	1	1	1	
2	N.S.S.	. THREADLE	1	1	1	1	1
3	N.S.S.	. BUSHING, INNER	2	2			1
3	N.S.S.	. BUSHING, INNER			1	1	1
4	507260	. BUSHING NYLINER W/SHOULDER .375x.437x.375x.594	2	2	2	2	
5	N.S.S.	. PIN, THREADLE	1	1	1	1	1
6	N.S.S.	. RING, SNAP 5/16" I.D.	3	3	3	3	1
7	500427	. SCREW MA RND PH #10-32x1 1/4 ZP	2	2	2	2	
8	531402	. POTENTIOMETER PEDAL SENSOR 0-5V	1	1	1	1	
9	N8887087	. WIRE HARNESS	1	1	1	1	
10	500883	. . SCREW TC PAN PH #8-32x3/8 Z050	2	2	2	2	
11	N.S.S.	. . CLIP	2	2	2	2	1
12	N.S.S.	. BUSHING, GARLOCK	2	2	2	2	1
13	N.S.S.	. THRUST, WASHER-OUTER	2	2	2	2	1
13	N.S.S.	. THRUST, WASHER-INNER	2	2	2	2	1
14	N.S.S.	. SPRING	2	2	2	2	1
15	N.S.S.	. SHAFT SENSOR DRIVE	1	1	1	1	1
16	505208	. SPRING, PIN 1/8 X 7/8	1	1	1	1	
17	N.S.S.	. ROLLER, PIN	1	1	1	1	1
18	N.S.S.	. LEVER, THREADLE	1	1	1	1	1
19	N.S.S.	. ROLLER	1	1	1	1	1
20	531462	. BASE PLATE / (includes item #5)	1	1	1	1	
NS	531393	KIT REPAIR / LOWER THREADLE PIN	1	1	1	1	A
NS	531394	KIT REPAIR / ROLLER	1	1	1	1	B
		A) INCLUDES ITEMS #3-4-5-6					
		B) INCLUDES ITEMS 6, 18, 19					
		1) NOT SOLD SEPARATELY					

From Y-7046 To 3-8164		Date:07/2024	PAGE:Y2-0316-00
FUEL COOLER - INSTALLATION			

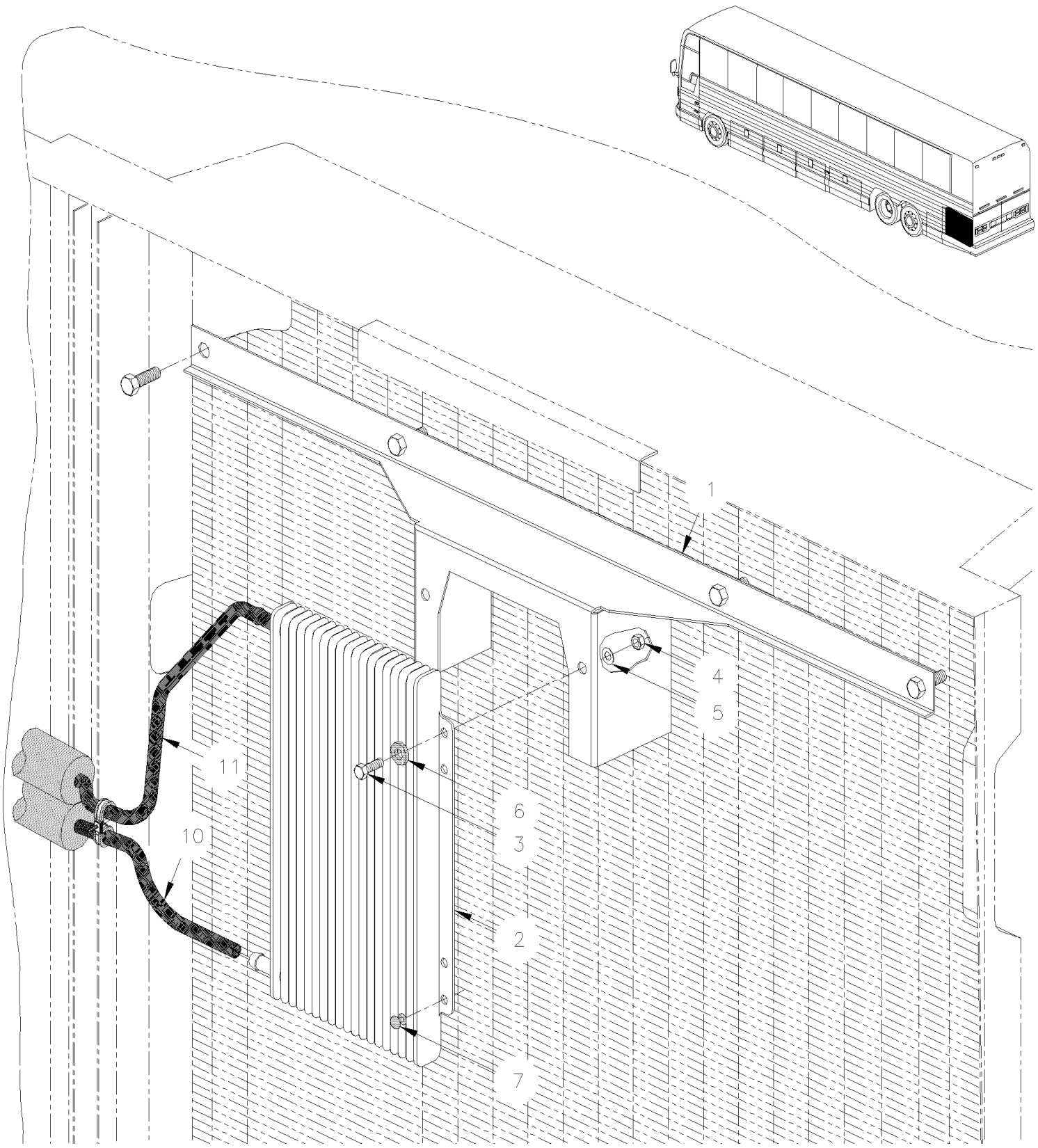

From Y-7046 To 3-8164		Date:07/2024	PAGE:Y2-0316-00

FUEL COOLER - INSTALLATION

Item#	Part	Description	XLII 45	XLII MTH40	XLII MTH45	XLII MTH45E	NOTES
1	032242	SUPPORT / FUEL COOLER	1				
1	032242	SUPPORT / FUEL COOLER				AR	
1	032264	SUPPORT / FUEL COOLER / W/AIR COOLER OVER RAD & SMALL A/C		1	1		
1	032264	SUPPORT / FUEL COOLER / W/AIR COOLER OVER RAD & SMALL A/C				AR	
1	032265	SUPPORT / FUEL COOLER / W/AIR COOLER OVER RAD & LARGE A/C		1	1		
1	032265	SUPPORT / FUEL COOLER / W/AIR COOLER OVER RAD & LARGE A/C				AR	
2	531422	FUEL COOLER	1	1	1	1	
3	502563	SCREW CAP HEX M6-1.0x12 G8.8 Z050	4	4	4	4	
4	502854	NUT HEX M6-1.0 N500	4	4	4	4	
5	502853	WASHER LO SPT 6.1x11.8x1.6 N500	4	4	4	4	
10	032137	HOSE ASSY / FROM CYLINDER HEAD / #6 2009MM	1		1		
10	032137	HOSE ASSY / FROM CYLINDER HEAD / #6 2009MM	1		1		A
10	032185	HOSE ASSY / FROM CYLINDER HEAD / #6 1910MM		1		1	
10	033231	HOSE ASSY / FROM CYLINDER HEAD / #6 1910MM		1		1	A
11	032184	HOSE ASSY / TO FUEL TANK / #6 7440MM	1		1		
11	033230	HOSE ASSY / TO FUEL TANK / #6 7440MM	1		1		A
11	033221	HOSE ASSY / #6 7991MM	1		1		A
11	032097	HOSE ASSY / #6 7991MM		1		1	
		A) SERVICE ONLY					

From 4-8165 To 8-9339		Date:07/2024	PAGE:Y2-0316-01
FUEL COOLER - INSTALLATION			

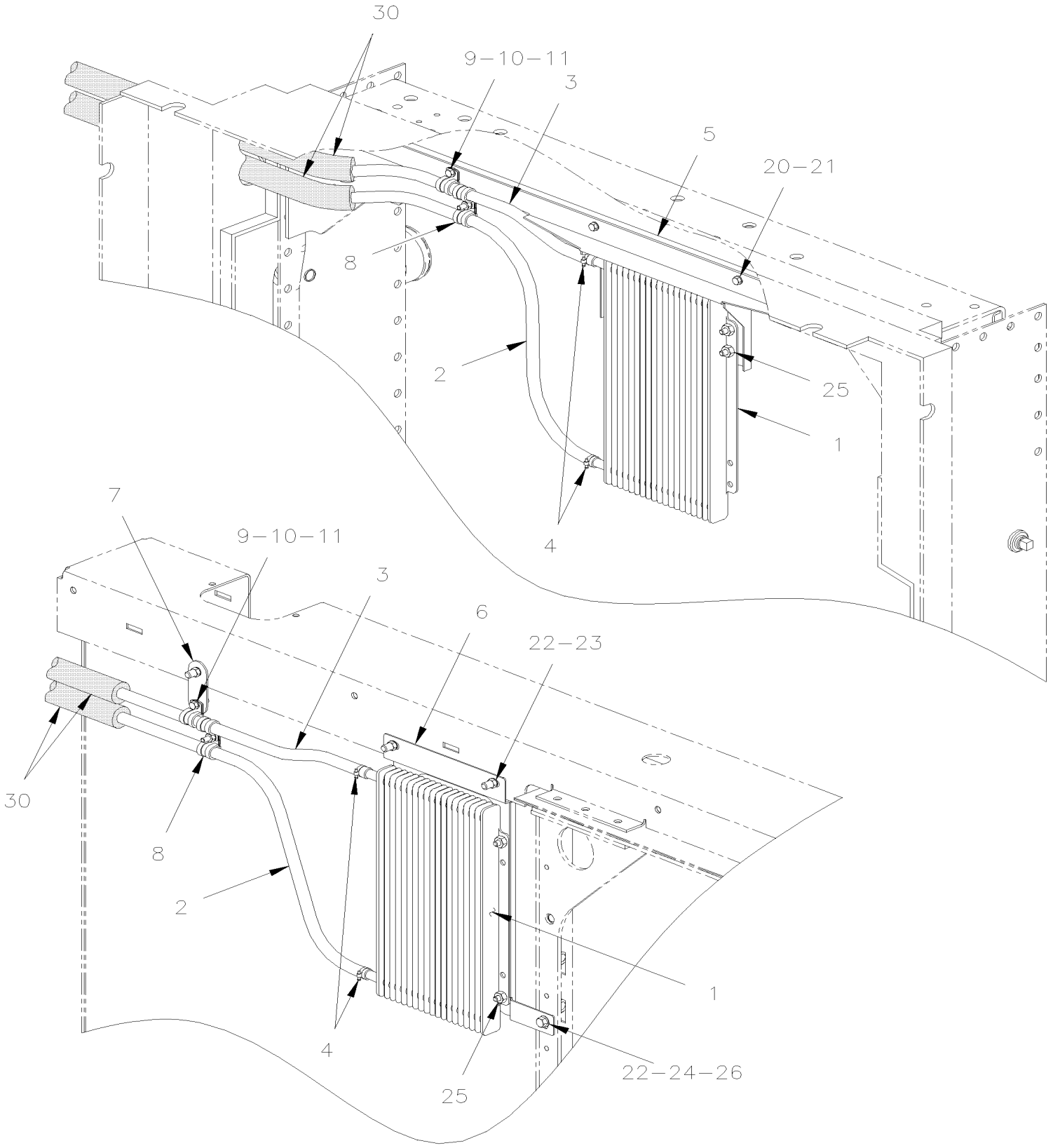

From 4-8165 To 8-9339		Date:07/2024	PAGE:Y2-0316-01

FUEL COOLER - INSTALLATION

Item#	Part	Description	XLII 45	XLII MTH40	XLII MTH45	XLII MTH45E	NOTES
1	531422	FUEL COOLER	1	1	1	1	
2	032531	HOSE ASSY / FROM CYLINDER HEAD / #6 2060MM To 5-8358		1		1	
2	032565	HOSE ASSY / FROM CYLINDER HEAD / #6 2650MM From 5-8359		1		1	
2	033236	HOSE ASSY / FROM CYLINDER HEAD / #6 2650MM From 5-8359		1		1	A
2	032530	HOSE ASSY / FROM CYLINDER HEAD / #6 2650MM To 5-8358			1		
2	032498	HOSE ASSY / FROM CYLINDER HEAD / #6 2060MM From 5-8359			1		
2	033232	HOSE ASSY / FROM CYLINDER HEAD / #6 2060MM From 5-8359			1		A
2	032097	HOSE ASSY / #6 7991MM	1				
2	033221	HOSE ASSY / #6 7991MM	1				A
NS	5011260	FEMALE CONNECTOR SWIVEL / PUSH-LOK FITTING / #8FL-Fx#6 BR From 5-8359	1	1	1	1	
3	032183	HOSE ASSY / #8 5982MM		1		1	
3	033229	HOSE ASSY / #8 5982MM		1		1	A
3	032500	HOSE ASSY / TO FUEL TANK / #6 7440MM			1		
3	033230	HOSE ASSY / TO FUEL TANK / #6 7440MM			1		A
3	032530	HOSE ASSY / FROM CYLINDER HEAD / #6 2650MM To 5-8358	1				
3	032498	HOSE ASSY / FROM CYLINDER HEAD / #6 2060MM From 5-8359	1				
3	033232	HOSE ASSY / FROM CYLINDER HEAD / #6 2060MM From 5-8359	1				A
3	032184	HOSE ASSY / TO FUEL TANK / #6 7440MM From 5-8359		1		1	
3	033230	HOSE ASSY / TO FUEL TANK / #6 7440MM From 5-8359		1		1	A
4	504230	HOSE CLAMP / 3/8"-7/8" SS / HS-6	AR	AR	AR	AR	
5	032477	SUPPORT FUEL COOLER	1	1		1	
6	032502	SUPPORT FUEL COOLER			1		
7	031701	SUPPORT HOSE FUEL			1		
8	952629	CLAMP / 5/8" I.D.	AR	AR	AR	AR	
9	500574	SCREW MA TR PH #10-24x1 1/4 SS	AR	AR		AR	
10	500914	WASHER LO SPT .193x.334x.047 N500	AR	AR		AR	
11	502882	NUT HEX #10-24 N500	1	1		1	
20	502830	SCREW CAP HEX M6-1.0x20 G8.8 N500	5	5		5	
21	502853	WASHER LO SPT 6.1x11.8x1.6 N500	1	1		1	
22	192288	WASHER FL 8.4x18.0x2.0 ZG603			3		
23	502902	NUT HEXF NYRT 5/16-18 N500			3		
24	500942	WASHER LO SPT 8.1x14.8x2.0 N500			1		
25	500836	SCREW CAP HEX 5/16-18x3/4 G5 N500			1		
26	502681	NUT HEX NYRT M6-1.0 N500 G8			3		
30	506216	PIPE INSULATING / 5/8" I.D. X 1/2" TH. X 72 / APT05812			AR		
		A) SERVICE ONLY					

From Y-7046 To 8-9339		Date:07/2024	PAGE:Y2-0330-00

AIR FILTER & INTAKE - INSTALLATION WITH DETROIT S-60

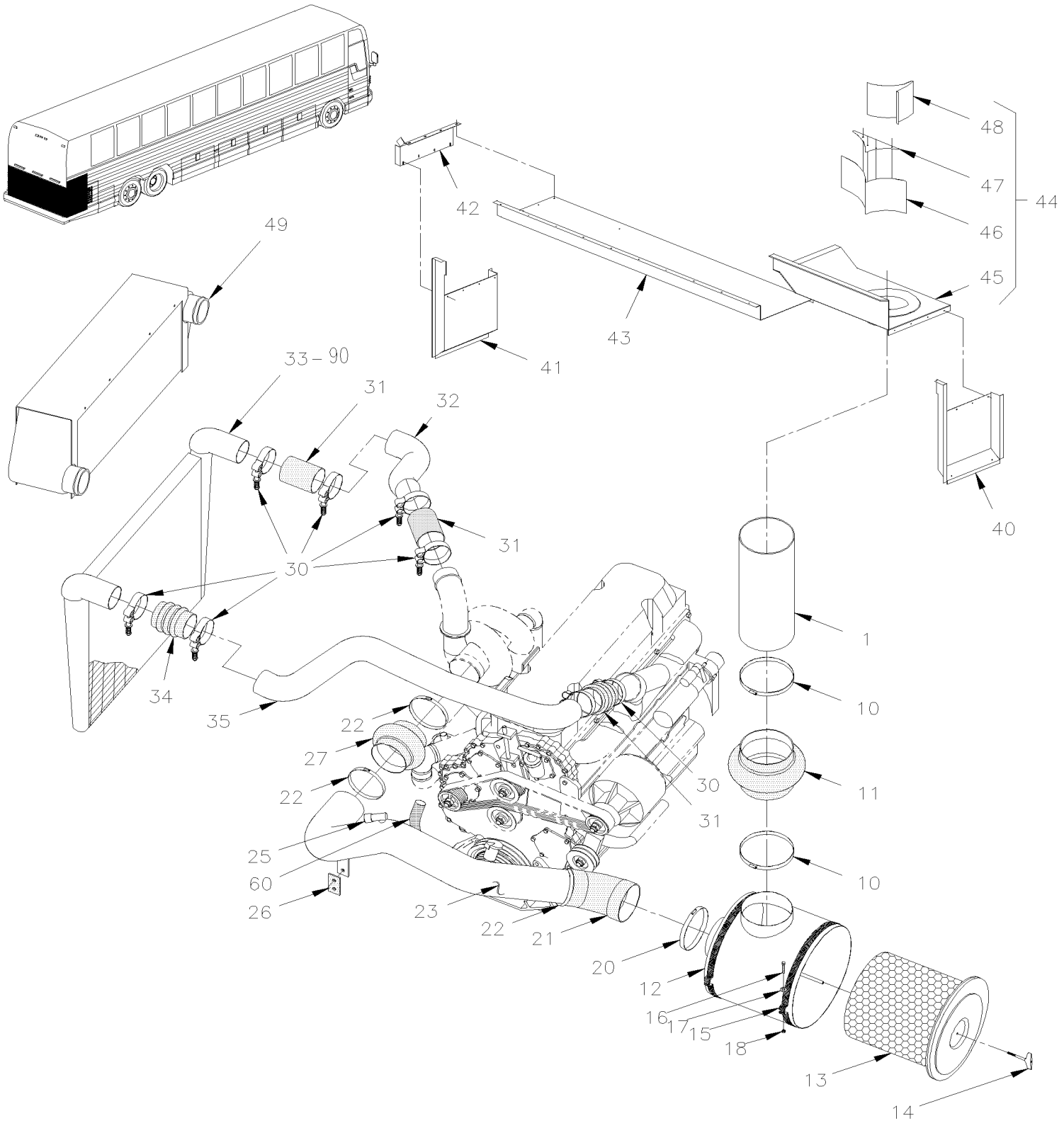

From Y-7046 To 8-9339		Date:07/2024	PAGE:Y2-0330-00
AIR FILTER & INTAKE - INSTALLATION WITH DETROIT S-60			

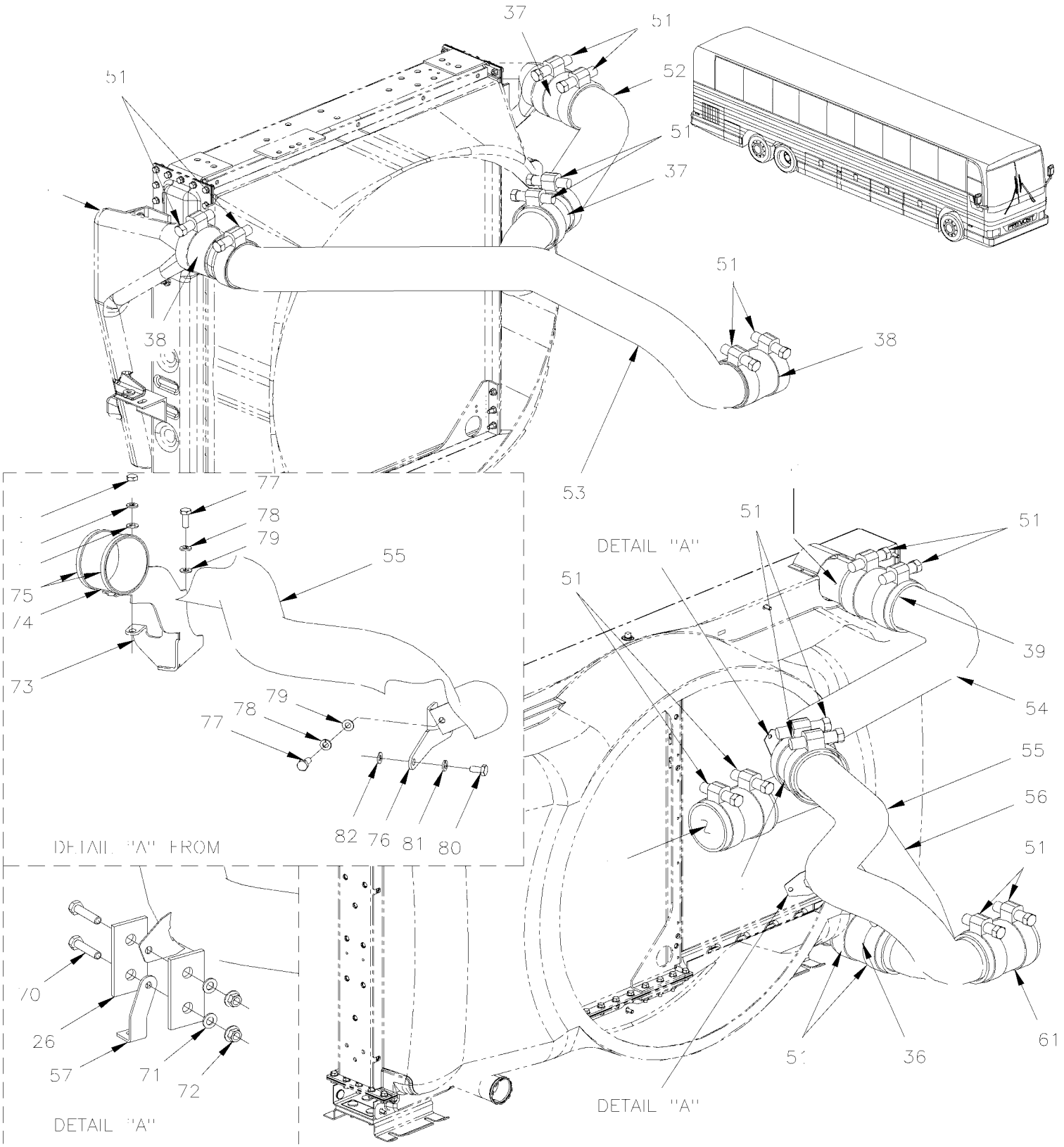

From Y-7046 To 8-9339		Date:07/2024	PAGE:Y2-0330-00

AIR FILTER & INTAKE - INSTALLATION WITH DETROIT S-60

Item#	Part	Description	XLII 45	XLII MTH40	XLII MTH45	XLII MTH45E	NOTES
1	032392	TUBE 8" O.D. X 5 3/4"	1				
1	031777	TUBE 8" O.D. X 8 5/16" / MTH 83"		1	1	1	
10	504415	HOSE CLAMP / 7"1/4-9"1/4 SS / HS-152	2	2	2	2	
11	530210	HOSE FLEXIBLE / 8" I.D. x 125MM		1	1	1	
11	531403	HOSE 8" I.D. 3"	1				
12	530206	FILTER AIR 18"	1	1	1	1	
13	530197	. ELEMENT AIR FILTER 18"	1	1	1	1	
14	531420	. NUT WING 1/2-13 NY	1	1	1	1	
15	031465	STRAP MOUNTING / W/18" AIR FILTER	2	2	2	2	
16	500183	SCREW CAP HEX 5/16-18x1 1/2 G5 PT Z050	2	2	2	2	
17	500441	WASHER FL .312x.734x.065 Z050	2	2	2	2	
18	500777	NUT HEX STO 5/16-18 Z050	2	2	2	2	
20	504229	HOSE CLAMP / 6"1/2-8"1/2 SS / HS-100	1	1	1	1	
21	530169	ELBOW 45° DEGRES / REDUCER 7" X 6"	1	1	1	1	
22	504324	HOSE CLAMP / 4"1/2-6"1/2 SS / HS-96	3	3	3	3	
23	032269	PIPE 5 1/2" O.D. / AIR FILTER & TURBO To 2-7799	1	1	1	1	
23	032466	PIPE 5 1/2" O.D. / AIR FILTER & TURBO From 2-7800 To 3-8164	1	1	1	1	
23	032538	PIPE 5 1/2" O.D. / AIR FILTER & TURBO From 4-8165 To 4-8358	1	1	1	1	
23	032562	PIPE 5 1/2" O.D. / AIR FILTER & TURBO From 5-8359	1	1	1	1	
NS	563275	HUMIDITY SENSOR 1/2" NPT / FIXED AT PIPE NEAR TURBO To 4-8358	1	1	1	1	
NS	510848	HUMIDITY SENSOR 3/8" NPT / FIXED AT PIPE NEAR TURBO From 5-8359	1	1	1	1	
NS	563404	CONNECTOR / APEX 2.8MM / SH 2C / BLACK / FCI 54200206 From 5-8359	1	1	1	1	
NS	563276	SOCKET TERMINAL / FCI J5-1811-66AU From 5-8359	2	2	2	2	
25	530161	GAUGE AIR RESTRICTION 20" H2O 1/8" NPT	AR	AR	AR	AR	
25	530193	GAUGE AIR RESTRICTION 15" H2O / (AS SHOWN) 1/8" NPT	AR	AR	AR	AR	
NS	530121	GAUGE AIR RESTRICTION INDICATOR 1/8" NPT WITH HOSE	1	1	1	1	
NS	031904	SUPPORT / TO FIX GAUGE RESTRICTION	1	1	1	1	
26	040535	MUFFLER CONNECTION To 7-8966			AR		
NS	032540	SPACER 1/2" O.D.X 12MM SS From 4-8262 To 7-8966			2		
27	530102	REDUCER RUBBER / 5 1/2" X 5" DIA.	1	1	1	1	
30	531386	HOSE CLAMP SPRING LOAD / HEAVY DUTY 4"1/8-4"7/16 To 3-8164	8	8	8	8	
31	531396	HOSE 4" I.D. 6 1/4" To 3-8164	3	3	3	3	F
32	032261	PIPE 4" O.D. / AIR COOLER & TURBO To 3-8164		1	1	1	
32	031954	PIPE 4" O.D. / AIR COOLER & TURBO To 3-8164	1				
33	550801	AIR COOLER ASSY To 3-8164	1				
. NS	MI06-02	. SEE MAINTENANCE INFORMATION To 3-8164	1				
34	531385	HOSE / W/3 RING / 4" I.D. 6" To 3-8164	1	1	1	1	
35	032262	PIPE 4" O.D. / AIR COOLER & MANIFOLD To 3-8164		1	1	1	
35	031928	PIPE 4" O.D. / AIR COOLER & MANIFOLD W/O AIR RESTRICTION GAUGE W/O RESTRICTION GAUGE To 3-8164	1				
35	031827	PIPE 4" O.D. / AIR COOLER & MANIFOLD W/AIR RESTRICTION GAUGE W/AIR RESTRICTION GAUGE To 3-8164	1				
36	531396	HOSE 4" I.D. 6 1/4" From 4-8165 To 7-8966			1		
36	531471	HOSE SILICONE 4" I.D. 6 1/2" / 500F° From 7-8967			1		

From Y-7046 To 8-9339		Date:07/2024	PAGE:Y2-0330-00

AIR FILTER & INTAKE - INSTALLATION WITH DETROIT S-60

Item#	Part	Description	XLII 45	XLII MTH40	XLII MTH45	XLII MTH45E	NOTES
37	531467	HOSE / W/2 RING / 4" I.D. 7" / 500F° From 4-8165	2	2		2	
38	531469	HOSE / W/2 RING / 4" I.D. 8" / 500°F From 4-8165	2	2		2	
39	531469	HOSE / W/2 RING / 4" I.D. 8" / 500°F From 4-8165 To 7-8966			3		F
39	531471	HOSE SILICONE 4" I.D. 6 1/2" / 500F° From 7-8967			3		
40	032385	AIR INTAKE R.H. To 4-8234	1				
40	215302	AIR INTAKE R.H. From 4-8235	1				
40	032360	AIR INTAKE R.H. / MTH 86" To 4-8234		1	1	1	
40	215305	AIR INTAKE R.H. / MTH 86" From 4-8235		1	1	1	
40	032486	AIR INTAKE R.H. / MTH 89" From 2-7908 To 4-8234				1	A
40	215347	AIR INTAKE R.H. / MTH 89" From 4-8235				1	A
40	032424	AIR INTAKE To 2-7907				1	
41	032358	AIR INTAKE L.H. / MTH 83"		1	1		
41	032386	AIR INTAKE L.H. To 4-8234	1				
41	215303	AIR INTAKE L.H. From 4-8235	1				
41	215304	AIR INTAKE L.H. / MTH From 4-8235		1	1		
41	032423	AIR INTAKE To 2-7907				1	
42	031760	ANGLE CLOSING L.H. DUCT	1	1	1	1	
43	032384	DUCT CENTER PART 1622MM To 4-8234	1	1	1	1	
43	215320	DUCT CENTER PART 1622MM From 4-8235	1	1	1	1	
44	031767P	BOX ASSY / FIBERGLASS	1	1	1	1	
45	031754	. FIBERGLASS BOX	1	1	1	1	
46	031769	. DEFLECTOR FRONT	1	1	1	1	
47	031775	. COVER FRONT DEFLECTOR	1	1	1	1	
48	031757	. DEFLECTOR REAR	1	1	1	1	
NS	504528	HOLE PLUG BUTTON / .437 O.D. BLACK		3	3	3	
NS	500642	SCREW TP PAN PH #10x3/4 Z050	AR	AR	AR	AR	
NS	500641	SCREW TP PAN PH #8x3/4 Z050	AR	AR	AR	AR	
49	550772	AIR COOLER ASSY / OVER COOLANT RADIATOR To 3-8164		1	1	1	
. NS	MI06-02	. SEE MAINTENANCE INFORMATION To 3-8164		1	1	1	
51	550851	CLAMP JO SS/HD/CT/PS/SL 4.25" From 4-8165 To 4-8226	8	8	8	8	
51	531386	HOSE CLAMP SPRING LOAD / HEAVY DUTY 4"1/8-4"7/16 From 4-8227 To 4-8239	8	8	8	8	
51	032543	HOSE CLAMP SPRING LOAD / MODIFIED "PREVOST" / 4"1/8-4"7/16 From 4-8240	AR	AR	AR	AR	F
. NS	531386	. HOSE CLAMP SPRING LOAD / HEAVY DUTY 4"1/8-4"7/16 From 4-8240	1	1	1	1	F
. NS	502930	. SPRING COMPRESSION / .975 O.D. x 1.5 x .225 From 4-8240	1	1	1	1	F
. NS	500401	. WASHER FL .343x.875x.125 N500 From 4-8240	1	1	1	1	F
. NS	500897	. WASHER FL .437x1.000x.083 N500 From 4-8240	2	2	2	2	F
52	032473	PIPE 4" O.D. / AIR COOLER & TURBO From 4-8165 To 4-8358	1	1		1	
52	052580	PIPE 4" O.D. / AIR COOLER & TURBO From 5-8359	1	1		1	
53	032472	PIPE 4" O.D. / AIR COOLER & MANIFOLD From 4-8165	1	1		1	F
54	052466	PIPE 4" O.D. / AIR COOLER SIDE From 4-8165 To 7-8966			1		C
54	052568	PIPE 4" O.D. / AIR COOLER SIDE From 4-8165 To 7-8966			1		C
54	052568	PIPE 4" O.D. / AIR COOLER SIDE From 7-8967			1		

From Y-7046 To 8-9339		Date:07/2024	PAGE:Y2-0330-00

AIR FILTER & INTAKE - INSTALLATION WITH DETROIT S-60

Item#	Part	Description	XLII 45	XLII MTH40	XLII MTH45	XLII MTH45E	NOTES
55	052467	PIPE 4" O.D. / MANIFOLD SIDE From 4-8165 To 7-8966			1		C
55	052567	PIPE 4" O.D. / MANIFOLD SIDE From 4-8165 To 7-8966			1		C
55	052567	PIPE 4" O.D. / MANIFOLD SIDE From 7-8967			1		
56	052465	PIPE 4" O.D. / AIR COOLER & TURBO From 4-8165 To 4-8358			1		
56	052581	PIPE 4" O.D. / AIR COOLER & TURBO From 5-8359			1		
57	052516	ANGLE SUPPORT, UPPER PIPE From 4-8165 To 7-8966			1		
58	531467	HOSE / W/2 RING / 4" I.D. 7" / 500F° From 4-8165 To 4-8358			1		F
58	531469	HOSE / W/2 RING / 4" I.D. 8" / 500°F From 5-8359			1		
60	142290	HOSE / (SUCTION AIR COMPRESSOR) / #16 870MM From 4-8165	1	1	1	1	B
NS	5011240	MALE CONNECTOR / BEADED HOSE BARB / #16x3/4NPT-M BR From 4-8165	1	1	1	1	
NS	952641	CLAMP P STL ZP RUB 34.9 ID From 4-8165	1	1	1	1	
NS	500659	SCREW TC PAN PH #10-32x1 Z050 From 4-8165	1	1	1	1	
61	531469	HOSE / W/2 RING / 4" I.D. 8" / 500°F From 4-8165 To 7-8966			1		
61	531463	HOSE 4" I.D. 4.33" / 500F° From 7-8967			1		
62	531467	HOSE / W/2 RING / 4" I.D. 7" / 500F° From 4-8165			1		
70	940142	SCREW CAP HEX M8-1.25x30 G8.8 ZG603 To 7-8966			2		
71	500381	WASHER FL 8.4x25.0x2.0 N500 To 7-8966			4		
72	502847	NUT HEX NYRT M8-1.25 N500 To 7-8966			2		
73	052614	SUPPORT From 7-8967			1		
74	531470	PROTECTOR SILICONE 4" I.D. X 1 3/4" WIDE From 7-8967			1		
75	531386	HOSE CLAMP SPRING LOAD / HEAVY DUTY 4"1/8-4"7/16 From 7-8967			1		
76	052615	SUPPORT "Y" SHAPE From 7-8967			1		
77	955297	SCREW CAP HEX M8-1.25x25 G8.8 ZG603 From 7-8967			2		
78	500942	WASHER LO SPT 8.1x14.8x2.0 N500 From 7-8967			2		
79	192288	WASHER FL 8.4x18.0x2.0 ZG603 From 7-8967			3		
80	502804	SCREW CAP HEX M10-1.5x25 G8.8 N500 From 7-8967			2		
81	3852496	WASHER LO SPT 10.2x18.1x2.2 ZG603 From 7-8967			3		
82	960143	WASHER FL 10.5x26.0x2.0 ZP From 7-8967			3		
83	500847	NUT HEX M10-1.5 N500 From 7-8967			1		
90	550845	AIR COOLER ASSY From 4-8165	1	1		1	
. NS	MI06-02	. SEE MAINTENANCE INFORMATION From 4-8165	1	1		1	
90	550968	AIR COOLER ASSY TitanX From 4-8165	1	1		1	
90	550978	AIR COOLER ASSY Dura-Lite From 4-8165	1	1		1	
91	550847	AIR COOLER ASSY / SIDE BY SIDE MODEL From 4-8165			1		
. NS	MI06-02	. SEE MAINTENANCE INFORMATION From 4-8165			1		
91	550976	AIR COOLER ASSY / "duralite" / SIDE BY SIDE MODEL Dura-Lite From 4-8165			1		
NS	WB04-04	SEE WARRANTY BULLETIN	1	1	1	1	
102	032719	KIT RETROFIT, AIR COOLER ATTACHMENT To 7-8966			1		
. NS	052614	. SUPPORT To 7-8966			1		
. NS	052615	. SUPPORT "Y" SHAPE To 7-8966			1		
. NS	192288	. WASHER FL 8.4x18.0x2.0 ZG603 To 7-8966			2		

From Y-7046 To 8-9339		Date:07/2024	PAGE:Y2-0330-00

AIR FILTER & INTAKE - INSTALLATION WITH DETROIT S-60

Item#	Part	Description	XLII 45	XLII MTH40	XLII MTH45	XLII MTH45E	NOTES
. NS	3852496	. WASHER LO SPT 10.2x18.1x2.2 ZG603 To 7-8966			3		
. NS	500847	. NUT HEX M10-1.5 N500 To 7-8966			1		
. NS	502889	. WASHER LO SPT 8.1x12.7x2.0 N500 To 7-8966			2		
. NS	960143	. WASHER FL 10.5x26.0x2.0 ZP To 7-8966			3		
. NS	955297	. SCREW CAP HEX M8-1.25x25 G8.8 ZG603 To 7-8966			2		
. NS	502804	. SCREW CAP HEX M10-1.5x25 G8.8 N500 To 7-8966			2		
. NS	531396	. HOSE 4" I.D. 6 1/4" To 7-8966			1		
. NS	IS-03071	. SEE INSTRUCTION SHEET To 7-8966			1		
		A) MTH WITH "BOSCH" ALTERNATOR					
		B) TO AIR COMPRESSOR					
		C) FOR PRODUCT IMPROVEMENT, USE WITH KIT 032719 AND 052568 AND 052567					
		F) FOR PRODUCT IMPROVEMENT, SEE WARRANTY BULLETIN WB04-04					

		Date:07/2024	Y2-04
EXHAUST			

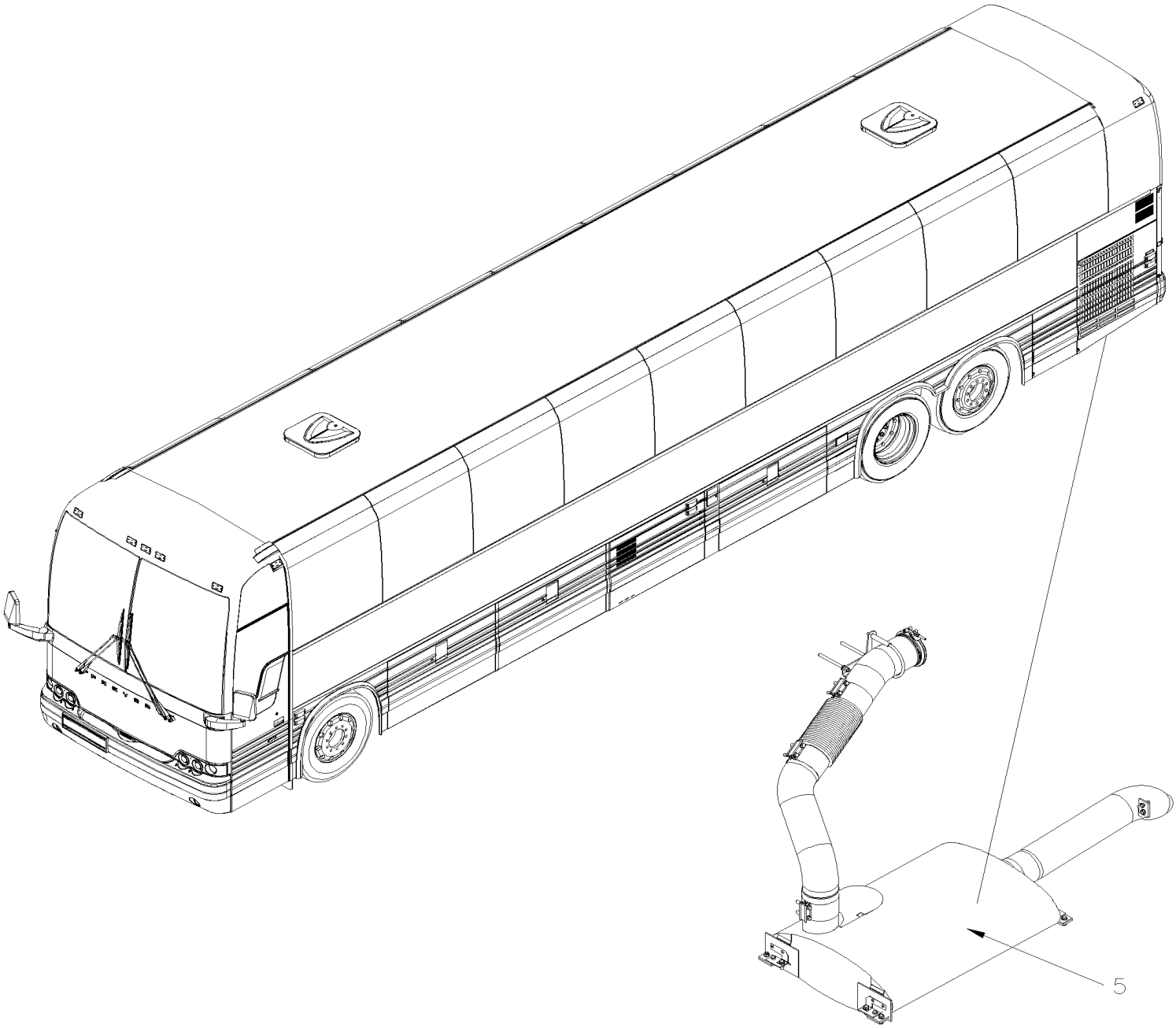

		Date:07/2024	Y2-04

EXHAUST

Item#	Part	Description	XLII 45	XLII MTH40	XLII MTH45	XLII MTH45E	NOTES
5	Y2-0405-00	MUFFLER - INSTALLATION WITH DETROIT S-60 From Y-7046 To 8-9339					

From Y-7046 To 8-9339		Date:07/2024	PAGE:Y2-0405-00
MUFFLER - INSTALLATION WITH DETROIT S-60			

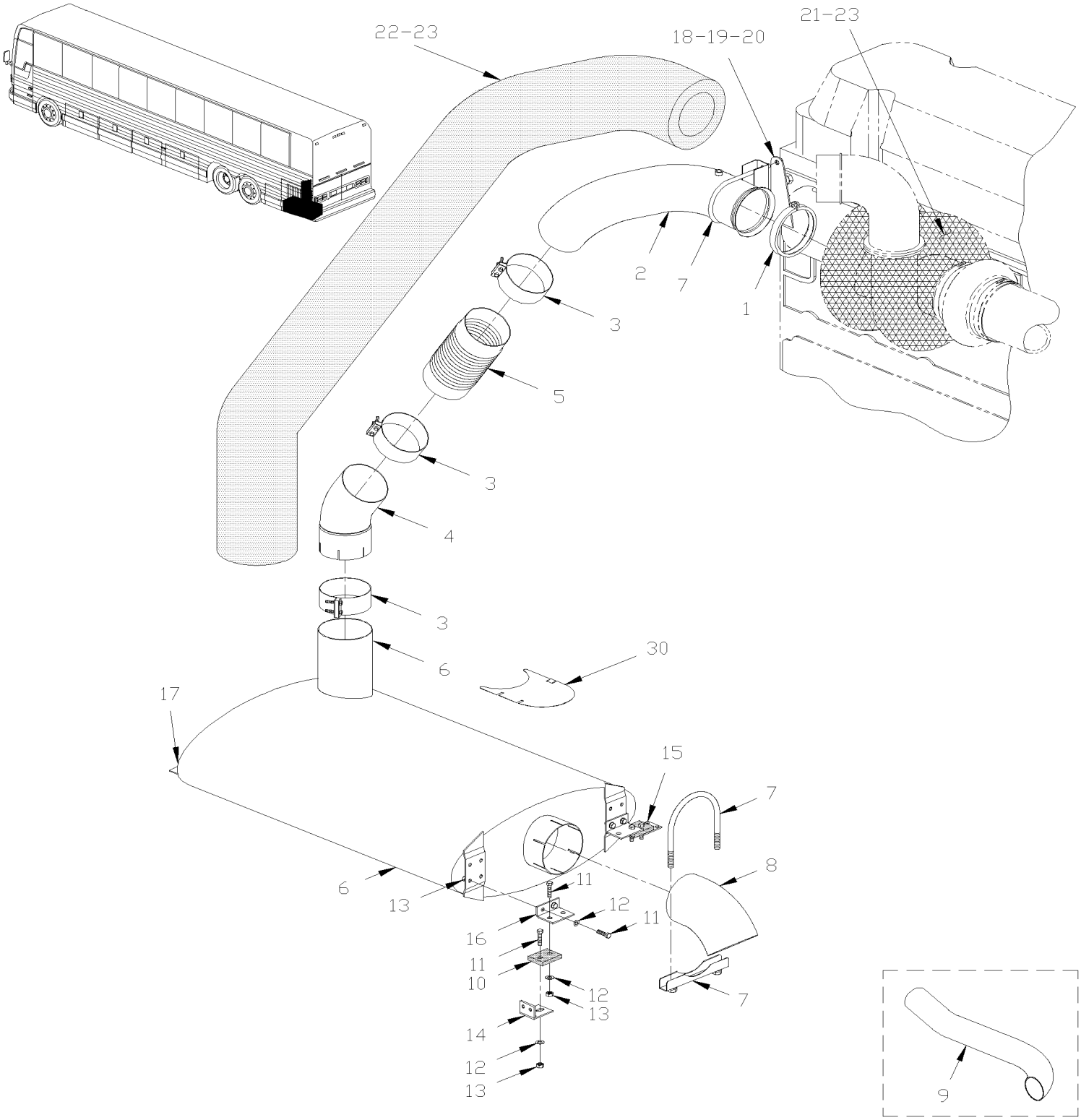

From Y-7046 To 8-9339		Date:07/2024	PAGE:Y2-0405-00

MUFFLER - INSTALLATION WITH DETROIT S-60

Item#	Part	Description	XLII 45	XLII MTH40	XLII MTH45	XLII MTH45E	NOTES
1	540047	V-CLAMP / 5.588" I.D. To 4-8242	1	1	1	1	
1	540056	V-CLAMP / 5.588" I.D. From 4-8243	1	1	1	1	
2	040521	PIPE / W/SERIES 60 To 3-8164		1		1	
2	040531	PIPE / W/SERIES 60 / STANLESS STEEL To 3-8164		1		1	
2	040523	PIPE / W/SERIES 60 To 3-8164	1		1		
2	040545	PIPE / W/SERIES 60 From 4-8165	1		1		
2	040542	PIPE / W/SERIES 60 From 4-8165		1		1	
3	540024	CLAMP BAND SEAL / BUTT JOINT / 5" I.D.x3"		2		2	
3	540024	CLAMP BAND SEAL / BUTT JOINT / 5" I.D.x3"	3		3		
4	040488	PIPE, ELBOW To 3-8164	1		1		
4	040520	PIPE ELBOW / W/SERIES 60 To 3-8164		1		1	
4	040532	PIPE ELBOW / W/SERIES 60 / STAINLESS STEEL To 3-8164		1		1	
4	040546	PIPE, ELBOW From 4-8165	1		1		
4	040543	PIPE, ELBOW From 4-8165		1		1	
5	540031	BELLOWS - EXHAUST 5" I.D. x 11.87"	1	1	1	1	
6	540045	MUFFLER SERIES 50 & 60	1	1	1	1	
. NS	503008	. NUT SPR U M8-1.25 0.6-4.0	16	16	16	16	
6	540053	MUFFLER SERIES 50 & 60 / STAINLESS	1	1	1	1	
7	540018	U-CLAMP / (GUILLOTINE TYPE) / 5" I.D.	1	1	1	1	
8	040467	PIPE, TAIL To 3-8164		1		1	
8	040563	PIPE, TAIL From 4-8165		1		1	
8	040534	PIPE, TAIL / STAINLESS STEEL To 3-8164		1		1	
9	040498	PIPE, TAIL To 3-8164	1		1		
9	040558	PIPE, TAIL / STAINLESS STEEL To 3-8164	1		1		
9	040552	PIPE, TAIL From 4-8165	1		1		
10	040988	MUFFLER CONNECTION	8	8	8	8	S
11	5001745	SCREW CAP HEX M8-1.25x25 G8.8 N500	8	8	8	8	
12	500401	WASHER FL .343x.875x.125 N500		8		8	
13	500680	NUT HEX STO M10-1.5 Z050	8	8	8	8	
14	260632	SUPPORT, ANGLE / MUFFLER (WELDED)	2	2	2	2	
14	212573	SUPPORT, ANGLE / MUFFLER (WELDED)	1		1		
14	260632	SUPPORT, ANGLE / MUFFLER (WELDED) To 2-7848		2		2	
14	260913	SUPPORT, ANGLE / MUFFLER (WELDED) From 2-7849 To 3-8164		2		2	
14	260936	SUPPORT, ANGLE / MUFFLER (WELDED) From 4-8165		1		1	
14	260934	SUPPORT, ANGLE / MUFFLER (WELDED) From 4-8165		1		1	
NS	211564	SUPPORT, ANGLE / MUFFLER (WELDED) To 3-8164		2		2	
NS	217912	SUPPORT, ANGLE / MUFFLER (WELDED) From 4-8165		2		2	
15	040465	SUPPORT ANGLE 30MM x 54MM x 72MM		4		4	
15	260689	ANGLE MUFFLER SUPPORT / BACKWARD / 28 5/8" To 3-8164	1		1		
15	260864	ANGLE MUFFLER SUPPORT 755MM BACKWARD From 4-8165	1		1		
15	260662	ANGLE MUFFLER SUPPORT / FORWARD / 28 5/8" To 3-8164	1		1		
15	260947	SUPPORT MUFFLE "U" SHAPE 727MM / FORWARD From 4-8165	1		1		

From Y-7046 To 8-9339		Date:07/2024	PAGE:Y2-0405-00

MUFFLER - INSTALLATION WITH DETROIT S-60

Item#	Part	Description	XLII 45	XLII MTH40	XLII MTH45	XLII MTH45E	NOTES
16	040465	SUPPORT ANGLE 30MM x 54MM x 72MM	1	1	1	1	
17	040489	SUPPORT, ANGLE / 1 7/16" x 4" x 2 11/32"		1		1	
17	040489	SUPPORT, ANGLE / 1 7/16" x 4" x 2 11/32"	4		4		
NS	502790	SCREW CAP HEX M8-1.25x20 G8.8 Z050	8	8	8	8	
17	502528	SCREW CAP HEX M8-1.25x20 G8.8 EMN	8	8	8	8	
NS	500874	WASHER FL 8.4x17.0x1.6 Z050	8	8	8	8	
17	5001161	WASHER LO SPT 8.1x14.8x2.0 SS-304	8	8	8	8	
NS	502744	NUT HEX STO M8-1.25 Z050	8	8	8	8	
18	040517	SUPPORT, PIPE To 1-7566	1	1	1	1	A
18	040541	SUPPORT, PIPE From 1-7567 To 3-8164	1	1	1	1	
18	040561	SUPPORT, PIPE From 4-8165	1	1	1	1	
NS	040560	KIT SUPPORT To 1-7566	1	1	1	1	
. NS	IS-00142	. SEE INSTRUCTION SHEET To 1-7566	1	1	1	1	
19	510626	STUD M10-1.5 x 120 From 1-7567	2	2	2	2	
20	500680	NUT HEX STO M10-1.5 Z050 From 1-7567	2	2	2	2	
21	040526	INSULATED BLANKET / TURBO To 1-7646		1	1	1	
21	040548	INSULATED BLANKET / TURBO From 1-7647 To 3-8164		1	1	1	
21	040557	INSULATING BLANKET / TURBO From 4-8165 To 5-8652		1	1	1	
22	040528	INSULATED BLANKET / PIPE & BELLOW To 1-7646		1		1	
22	040549	INSULATED BLANKET / PIPE & BELLOW From 1-7647 To 3-8164		1		1	
22	040537	INSULATED BLANKET / PIPE To 3-8164			1		
22	040553	INSULATING BLANKET / PIPE & BELLOW / UPPER SECTION From 4-8165			1		
22	040564	INSULATING BLANKET / PIPE & BELLOW / LOWER SECTION From 4-8165			1		
22	040565	INSULATING BLANKET / PIPE & BELLOW From 4-8165 To 7-9192		1		1	
22	040652	INSULATING BLANKET / PIPE & BELLOW From 7-9193		1		1	
23	509754	WIRE LACING SS / TO FIX BLANKET RL 25'		1	1	1	
30	040562	CLOSING PLATE From 4-8165		1		1	
30	040559	CLOSING PLATE From 4-8165		1		1	
		A) FOR PRODUCT IMPROVMENT YOUR REQUIRE KIT#040560					
		S) SERVICE					

		Date:07/2024	Y2-05
COOLING			

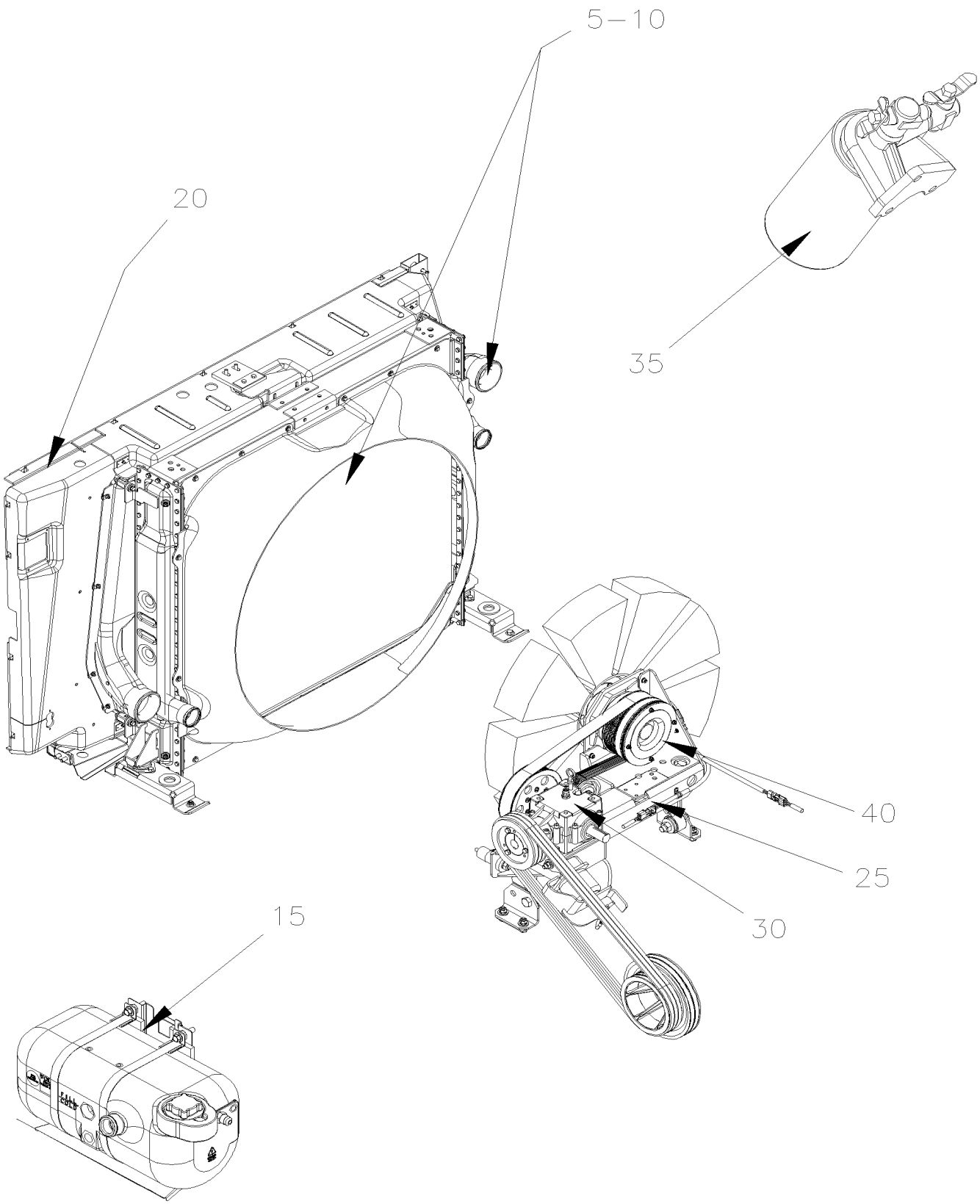

		Date:07/2024	Y2-05

COOLING

Item#	Part	Description	XLII 45	XLII MTH40	XLII MTH45	XLII MTH45E	NOTES
5	Y2-0500-00	COOLANT PIPING WITH DETROIT S-60 From Y-7046 To 3-8164					
5	Y2-0500-01	COOLANT PIPING WITH DETROIT S-60 From 4-8165 To 8-9339					
10	Y2-0505-00	RADIATOR ASSY - BUS From Y-7046 To 1-7604					
10	Y2-0505-01	RADIATOR ASSY - BUS From 1-7605 To 3-8164					
10	Y2-0505-02	RADIATOR ASSY - BUS, MTH 40' & MTH 45E From 4-8165 To 8-9339					
10	Y2-0505-50	RADIATOR ASSY - MTH From Y-7046 To 3-8164					
10	Y2-0505-51	RADIATOR ASSY - MTH 45' From 4-8165 To 8-9339					
15	Y2-0510-00	SURGE TANK From Y-7046 To 8-9339					
20	Y2-0518-00	RADIATOR SEALING FRAME From Y-7046 To 3-8164					
20	Y2-0518-01	RADIATOR SEALING FRAME - BUS, MTH 40' & MTH-45E From 4-8165 To 8-9339					
20	Y2-0518-50	RADIATOR SEALING FRAME - MTH 45' From 4-8165 To 8-9339					
25	Y2-0520-00	FAN DRIVE - INSTALLATION - SHORT From Y-7046 To 3-8164					
25	Y2-0520-01	FAN DRIVE - INSTALLATION - SHORT From 4-8165 To 6-8814					
25	Y2-0520-02	FAN DRIVE - INSTALLATION - SHORT From 6-8815 To 8-9339					
25	Y2-0520-50	FAN DRIVE - INSTALLATION - LONG From 4-8165 To 6-8814					
25	Y2-0520-51	FAN DRIVE - INSTALLATION - LONG From 6-8815 To 8-9339					
25	Y2-0520-98	FAN DRIVE - INSTALLATION - SHORT / "RETROFIT" From Y-7046 To 3-8164					
25	Y2-0520-99	FAN DRIVE - INSTALLATION - SHORT / "RETROFIT" From 4-8165 To 6-8814					
30	Y2-0525-00	GEARBOX "SUPERIOR" - #550789, 550810 & 550897 From Y-7046 To 8-9339					
35	Y2-0530-00	COOLANT FILTER - INSTALLATION WITH DETROIT S-60 From Y-7046 To 3-8164					
35	Y2-0530-01	COOLANT FILTER - INSTALLATION WITH DETROIT S-60 From 4-8165 To 8-9339					
40	Y2-0540-00	FAN CLUTCH ASSY - #550803 - BUS From Y-7046 To 3-7940					
40	Y2-0540-01	FAN CLUTCH ASSY - #550837 - BUS From 3-7941 To 3-8164					
40	Y2-0540-02	FAN CLUTCH ASSY - #550836 - BUS, MTH 40' & MTH-45E From 4-8165 To 6-8805					
40	Y2-0540-03	FAN CLUTCH ASSY - #550839 - BUS, MTH 40' & MTH-45E From 6-8806 To 8-9339					
40	Y2-0540-50	FAN CLUTCH ASSY - #550802 - MTH From Y-7046 To 2-7837					
40	Y2-0540-51	FAN CLUTCH ASSY - #550836 - MTH From 2-7838 To 3-8164					
40	Y2-0540-52	FAN CLUTCH ASSY - #550839 - MTH 45' From 4-8165 To 8-9339					

From Y-7046 To 3-8164		Date:07/2024	PAGE:Y2-0500-00
COOLANT PIPING WITH DETROIT S-60			

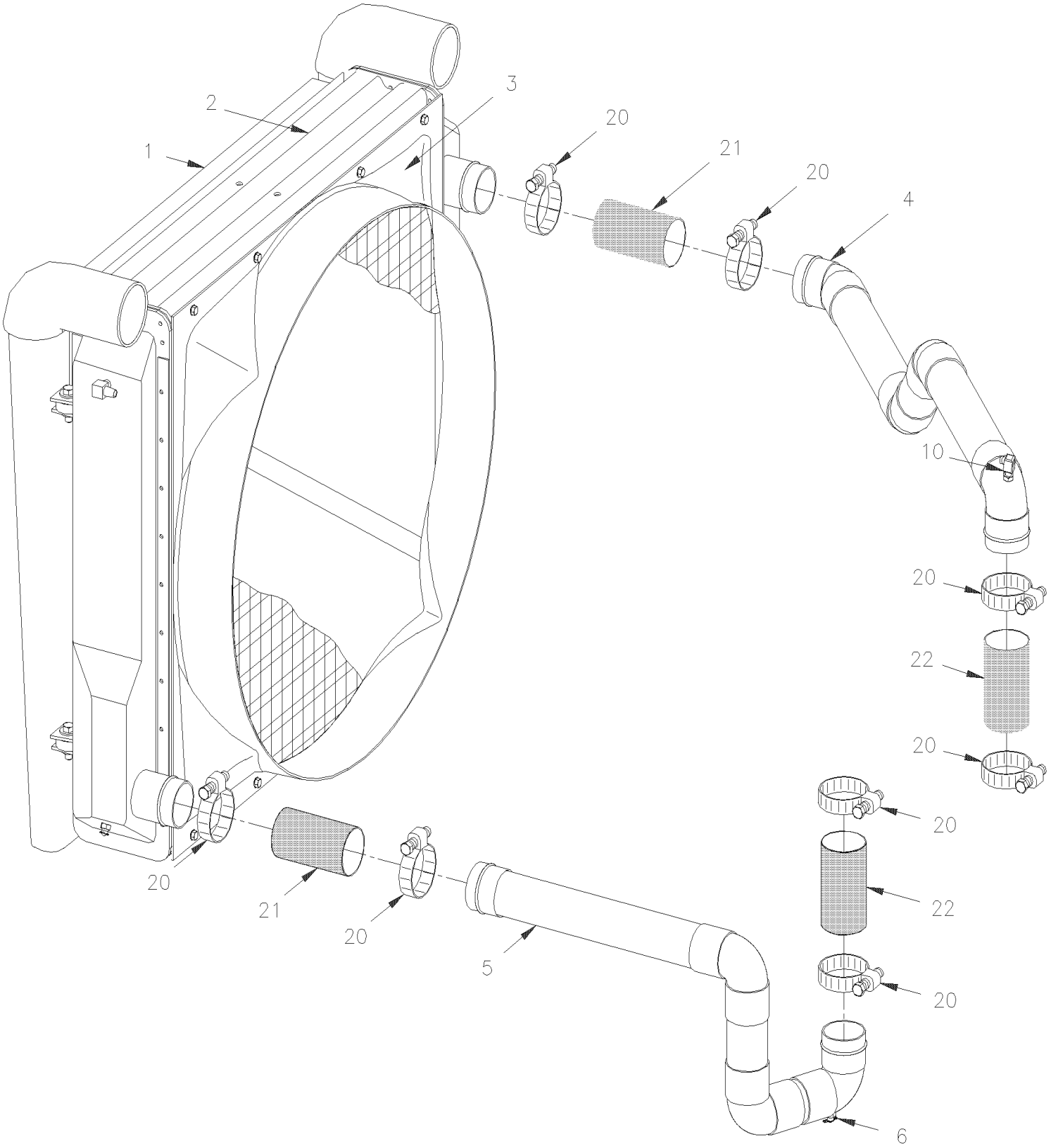

From Y-7046 To 3-8164		Date:07/2024	PAGE:Y2-0500-00

COOLANT PIPING WITH DETROIT S-60

Item#	Part	Description	XLII 45	XLII MTH40	XLII MTH45	XLII MTH45E	NOTES
1	**Y2-0330-00**	**AIR FILTER & INTAKE - INSTALLATION WITH DETROIT S-60**					
2	**Y2-0505-00**	**RADIATOR ASSY - BUS To 1-7604**					
2	**Y2-0505-01**	**RADIATOR ASSY - BUS From 1-7605**					
2	**Y2-0505-50**	**RADIATOR ASSY - MTH**					
3	**Y2-0505-50**	**RADIATOR ASSY - MTH**					
4	052257	PIPE / RADIATOR & THERMOSTAT HOUSING	1				
4	052038	PIPE / RADIATOR & THERMOSTAT HOUSING		1	1	1	
4	052220	PIPE / RADIATOR SIDE		1	1		
4	052220	PIPE / RADIATOR SIDE				AR	
4	052221	PIPE / THERMOSTAT HOUSING SIDE		1	1		
4	052221	PIPE / THERMOSTAT HOUSING SIDE				AR	
5	052025	PIPE / RADIATOR & ENGINE WATER PUMP	1	1	1	1	
5	052222	PIPE / RADIATOR & ENGINE WATER PUMP		1	1		
5	052222	PIPE / RADIATOR & ENGINE WATER PUMP				AR	
6	501129	EXTERNAL SEAL DRAIN 1/4 NPT	1	1	1	1	
20	504562	HOSE CLAMP / 2"3/4-3"5/8 / C.T. 350	8	8	8	8	
21	051604	HOSE 2 3/4" I.D. 130MM	2	2	2	2	
. NS	503395	. HOSE SILICONE 4PLY 2 3/4" I.D. x 3'	AR	AR	AR	AR	
22	051873	HOSE 2 5/8" I.D. 100MM		2	2	2	
22	051873	HOSE 2 5/8" I.D. 100MM	1				
22	052080	HOSE 2 5/8" I.D. 75MM	1				
NS	503580	. HOSE SILICONE 2 5/8" I.D. x 3'	AR	AR	AR	AR	
NS	503395	. HOSE SILICONE 4PLY 2 3/4" I.D. x 3'	AR	AR	AR	AR	

From 4-8165 To 8-9339		Date:07/2024	PAGE:Y2-0500-01
COOLANT PIPING WITH DETROIT S-60			

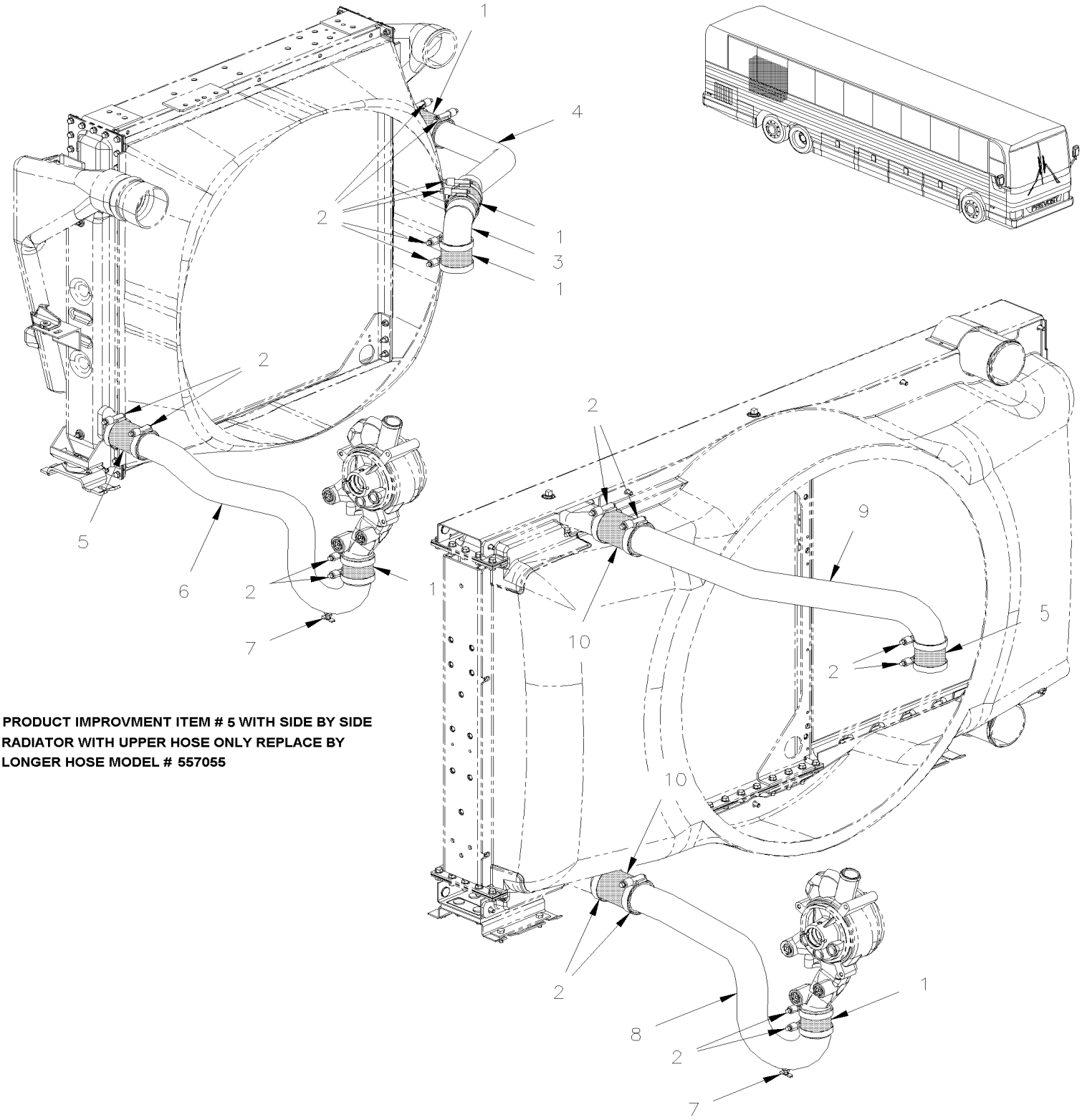

PRODUCT IMPROVMENT ITEM # 5 WITH SIDE BY SIDE RADIATOR WITH UPPER HOSE ONLY REPLACE BY LONGER HOSE MODEL # 557055

From 4-8165 To 8-9339		Date:07/2024	PAGE:Y2-0500-01

COOLANT PIPING WITH DETROIT S-60

Item#	Part	Description	XLII 45	XLII MTH40	XLII MTH45	XLII MTH45E	NOTES
1	052415	HOSE 2 1/2" I.D. 76MM	3	3		3	
1	052415	HOSE 2 1/2" I.D. 76MM			2		A
2	504562	HOSE CLAMP / 2"3/4-3"5/8 / C.T. 350	10	10		10	
2	504562	HOSE CLAMP / 2"3/4-3"5/8 / C.T. 350			8		
3	052447	PIPE, ELBOW 2 1/2" O.D. To 4-8358	1	1		1	
3	052599	ELBOW 90° X 2 1/2" I.D. / 118MM x 118MM C/C / SILICONE From 5-8359 To 8-9293	1	1		1	
3	052897	ELBOW 90° X 2 1/2" I.D. / 118MM x 118MM C/C / SILICONE From 8-9294			1	1	
4	052431	PIPE / THERMOSTAT HOUSING SIDE To 4-8358	1	1		1	
4	052601	PIPE / THERMOSTAT HOUSING SIDE From 5-8359	1	1		1	
5	052416	HOSE 2 1/2" I.D. 105MM	2	2		2	
5	557055	HOSE / W/HUMP 2 1/2" I.D. x 4" SERVICE	2	2		2	
6	052432	PIPE / RADIATOR & ENGINE WATER PUMP To 6-8807	1	1		1	
6	053522	PIPE / RADIATOR & ENGINE WATER PUMP SS SERVICE To 6-8807	1	1		1	
6	052704	PIPE / RADIATOR & ENGINE WATER PUMP From 6-8808	1	1		1	
6	053523	PIPE / RADIATOR & ENGINE WATER PUMP SS SERVICE From 6-8808	1	1		1	
7	501129	EXTERNAL SEAL DRAIN 1/4 NPT	1	1	1	1	
8	052420	PIPE / RADIATOR & ENGINE WATER PUMP			1		
8	053530	PIPE / RADIATOR & ENGINE WATER PUMP SS SERVICE			1		
9	052419	PIPE / THERMOSTAT HOUSING SIDE			1		
10	052480	HOSE 2 1/2" I.D. 152MM			2		
		A) FOR PRODUCT IMPROVEMENT SEE NOTE ON DRAWING					

From Y-7046 To 1-7604		Date:07/2024	PAGE:Y2-0505-00
RADIATOR ASSY - BUS			

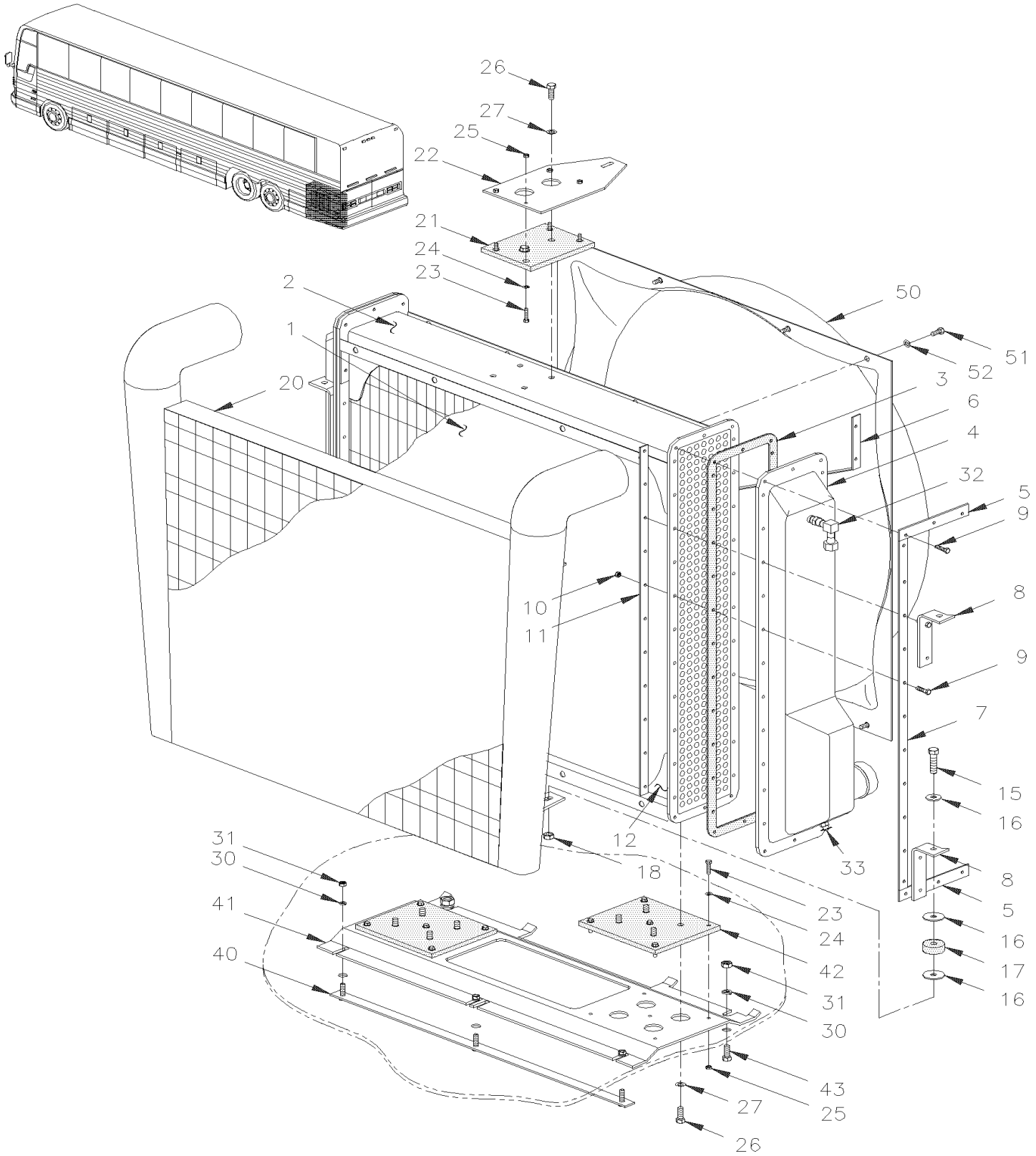

From Y-7046 To 1-7604		Date:07/2024	PAGE:Y2-0505-00

RADIATOR ASSY - BUS

Item#	Part	Description	XLII 45	XLII MTH40	XLII MTH45	XLII MTH45E	NOTES
	N.S.A.	RADIATOR ASSY / WATER & AIR COOLER	1				3
	550800	. RADIATOR ASSY / WATER	1				
1	550707	. . CORE	1				
2	550796	. . SUPPORT ASSY TOP	1				
3	550562	. . GASKET, HALF	4				
4	550798	. . TANK / RADIATOR FRONT	1				
4	550799	. . TANK / RADIATOR REAR	1				
5	051704	. . STRIP / EXTERIOR 7"	4				
NS	550705	. . STRIP / INTERIOR 5.44"	4				
6	550753	. . REINFORCEMENT STRIP "Z" SHAPE / FRONT	1				
6	550754	. . REINFORCEMENT STRIP "Z" SHAPE / REAR	1				
7	550702	. . STRIP / EXTERIOR 35.06"	4				
8	N.P.N.	. . ANGLE	1				4
9	500029	. . SCREW CAP HEX 5/16-24x1 1/2 G5 ZP	AR				
10	500699	. . NUT HEX 5/16-24 Z050	AR				
NS	500826	. . WASHER LO EXT .320x.610x.034 ZP	AR				
11	550703	. . STRIP / INTERIOR 33.44"	4				
12	550797	. . SUPPORT ASSY BOTTOM	1				
15	500831	SCREW CAP HEX 3/8-16x2 G5 ZP	4				
16	500446	WASHER FL .531x1.250x.125 Z050	8				
17	550685	BUSHING INSULATOR / RADIATORS	4				
18	500265	NUT HEX STO 3/8-16 Z050	4				
20	**Y2-0330-00**	**AIR FILTER & INTAKE - INSTALLATION WITH DETROIT S-60**					
21	052060	RUBBER PAD / SUPPORT & RADIATOR 165MM x 127MM W/6 HOLES	1				
22	052076	PLATE SUPPORT UPPER RADIATOR	1				
23	502737	SCREW CAP HEX M6-1.0x25 SS BK	12				
24	500468	WASHER FL .281x1.250x.065 Z050	15				
25	502621	NUT HEX STO M6-1.0 Z050	15				
26	500191	SCREW CAP HEX 3/8-16x1 G5 Z050	12				
27	500445	WASHER FL .437x1.000x.083 Z050	15				
28	052058	ATTACHMENT, ANGLE 55.50MM X 72.50 X 50.80MM	2				
30	502584	WASHER LO SERR 8.2x26.3x1.8 Z050	AR				
31	502543	NUT HEX M8-1.25 Z050	AR				
32	501332	STREET ELBOW 90º / PIPE FITTING / 1/4NPT-Mx1/4NPT-F BR	1				
NS	501308	ADAPTER / PIPE FITTING / 1/4NPT-Fx1/4NPT-M BR	1				
NS	501027	MALE CONNECTOR / SAE 45º FITTING / #4FL-Mx1/4NPT-M BR	1				
33	501129	EXTERNAL SEAL DRAIN 1/4 NPT	AR				
40	052224	ATTACHMENT, STRIP 768MM W/3 STUDS / TO FIX SUPPORT 364/364c/c	1				
41	052201	PLATE SUPPORT LOWER RADIATOR	1				
42	051836	RUBBER PAD / SUPPORT & RADIATOR 242MM x 165MM W/9 HOLES	1				
43	502780	SCREW CAP HEX M8-1.25x25 SS BK	2				
50	051837	SHROUD / W/32" FAN BLADE	1				

From Y-7046 To 1-7604		Date:07/2024	PAGE:Y2-0505-00

RADIATOR ASSY - BUS

Item#	Part	Description	XLII 45	XLII MTH40	XLII MTH45	XLII MTH45E	NOTES
51	500179	SCREW CAP HEX 5/16-18x3/4 G5 Z050	8				
52	500476	WASHER LO SPT .317x.586x.078 Z050	8				
NS	506001	TAPE RUB ADH1 CC POL 1/8" x 3/4" x 50' / GREY 2520X	AR				
		3) NOT SOLD ASSEMBLY					
		4) NO PARTS NUMBER					

From 1-7605 To 3-8164		Date:07/2024	PAGE:Y2-0505-01
RADIATOR ASSY - BUS			

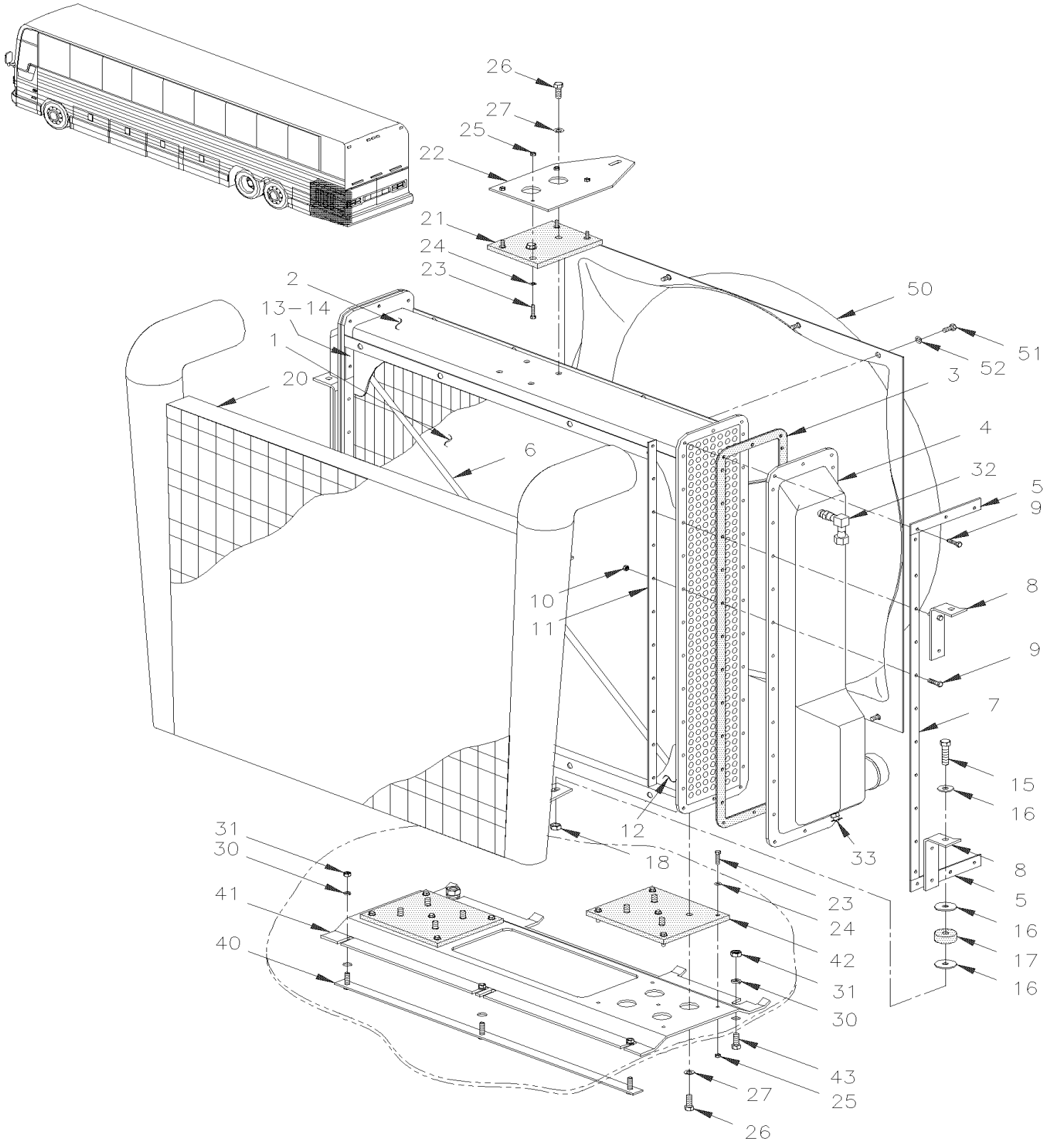

From 1-7605 To 3-8164		Date:07/2024	PAGE:Y2-0505-01

RADIATOR ASSY - BUS

Item#	Part	Description	XLII 45	XLII MTH40	XLII MTH45	XLII MTH45E	NOTES
	N.S.A.	RADIATOR ASSY / WATER & AIR COOLER	1				3
	550824	. RADIATOR ASSY / WATER	1				
1	550707	. . CORE	1				
2	550827	. . SUPPORT ASSY TOP	1				
3	550815	. . GASKET (ONE PIECE)	2				
4	550798	. . TANK / RADIATOR FRONT	1				
4	550799	. . TANK / RADIATOR REAR	1				
5	051704	. . STRIP / EXTERIOR 7"	4				
NS	550705	. . STRIP / INTERIOR 5.44"	4				
6	550829	. . REINFORCEMENT ROD 3/8" x 41"	2				
7	550702	. . STRIP / EXTERIOR 35.06"	4				
8	N.P.N.	. . ANGLE	1				4
9	500182	. . SCREW CAP HEX 5/16-18x1 1/4 G5 PT Z050	AR				
10	500701	. . NUT HEX 5/16-18 ZP	AR				
NS	500826	. . WASHER LO EXT .320x.610x.034 ZP	AR				
11	550703	. . STRIP / INTERIOR 33.44"	4				
12	550828	. . SUPPORT ASSY BOTTOM	1				
13	550830	. . TIE BAR / UPPER & LOWER SUPPORT	2				
NS	550770	. . BUSHING	4				
14	500265	. . NUT HEX STO 3/8-16 Z050	4				
15	500831	SCREW CAP HEX 3/8-16x2 G5 ZP	4				
16	500446	WASHER FL .531x1.250x.125 Z050	8				
17	550685	BUSHING INSULATOR / RADIATORS	4				
18	500265	NUT HEX STO 3/8-16 Z050	4				
20	**Y2-0330-00**	**AIR FILTER & INTAKE - INSTALLATION WITH DETROIT S-60**					
21	052060	RUBBER PAD / SUPPORT & RADIATOR 165MM x 127MM W/6 HOLES	1				
22	052076	PLATE SUPPORT UPPER RADIATOR	1				
23	502737	SCREW CAP HEX M6-1.0x25 SS BK	12				
24	500468	WASHER FL .281x1.250x.065 Z050	15				
25	502621	NUT HEX STO M6-1.0 Z050	15				
26	500191	SCREW CAP HEX 3/8-16x1 G5 Z050	12				
27	500445	WASHER FL .437x1.000x.083 Z050	15				
28	052058	ATTACHMENT, ANGLE 55.50MM X 72.50 X 50.80MM	2				
30	502584	WASHER LO SERR 8.2x26.3x1.8 Z050	AR				
31	502543	NUT HEX M8-1.25 Z050	AR				
32	501332	STREET ELBOW 90º / PIPE FITTING / 1/4NPT-Mx1/4NPT-F BR	1				
NS	501308	ADAPTER / PIPE FITTING / 1/4NPT-Fx1/4NPT-M BR	1				
NS	501027	MALE CONNECTOR / SAE 45º FITTING / #4FL-Mx1/4NPT-M BR	1				
33	501129	EXTERNAL SEAL DRAIN 1/4 NPT	AR				
40	052224	ATTACHMENT, STRIP 768MM W/3 STUDS / TO FIX SUPPORT 364/364c/c	1				
41	052201	PLATE SUPPORT LOWER RADIATOR	1				
42	051836	RUBBER PAD / SUPPORT & RADIATOR 242MM x 165MM W/9 HOLES	1				

From 1-7605 To 3-8164		Date:07/2024	PAGE:Y2-0505-01

RADIATOR ASSY - BUS

Item#	Part	Description	XLII 45	XLII MTH40	XLII MTH45	XLII MTH45E	NOTES
43	502780	SCREW CAP HEX M8-1.25x25 SS BK	2				
50	051837	SHROUD / W/32" FAN BLADE	1				
51	500179	SCREW CAP HEX 5/16-18x3/4 G5 Z050	8				
52	500476	WASHER LO SPT .317x.586x.078 Z050	8				
NS	506001	TAPE RUB ADH1 CC POL 1/8" x 3/4" x 50' / GREY 2520X	AR				
		3) NOT SOLD ASSEMBLY					
		4) NO PARTS NUMBER					

From 4-8165 To 8-9339		Date:07/2024	PAGE:Y2-0505-02
RADIATOR ASSY - BUS, MTH 40' & MTH 45E			

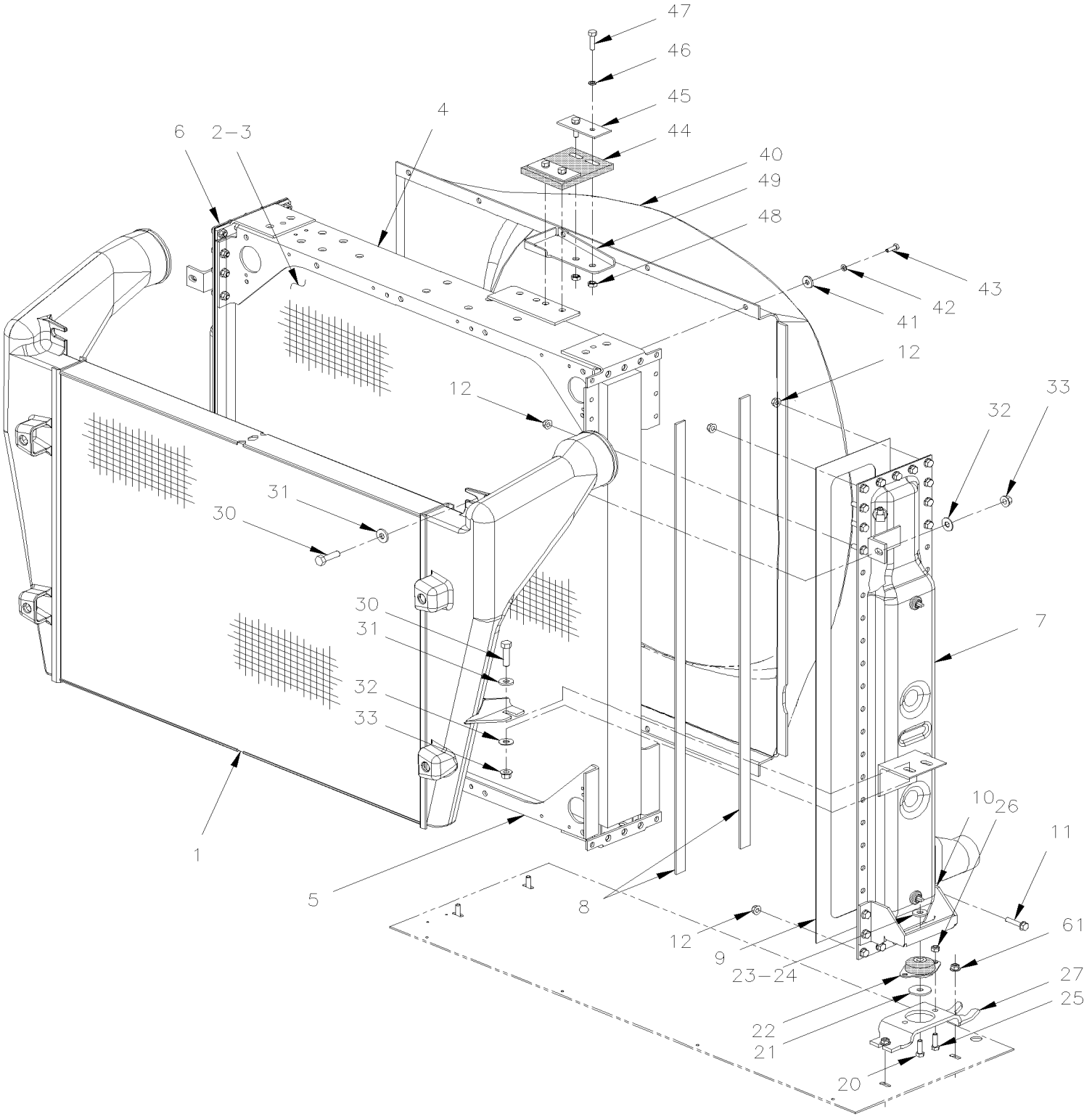

From 4-8165 To 8-9339		Date:07/2024	PAGE:Y2-0505-02

RADIATOR ASSY - BUS, MTH 40' & MTH 45E

Item#	Part	Description	XLII 45	XLII MTH40	XLII MTH45	XLII MTH45E	NOTES
	550820	RADIATOR ASSY W/AIR CHARGER / SANDWICH	1	1		1	
1	550845	. AIR COOLER ASSY	1	1		1	
. NS	MI06-02	. . SEE MAINTENANCE INFORMATION	1	1		1	
1	550968	. AIR COOLER ASSY TitanX	1	1		1	
1	550978	. AIR COOLER ASSY Dura-Lite	1	1		1	
2	550844	. RADIATOR ASSY	1	1		1	
3	550852	. . CORE	1	1		1	
4	550855	. . SUPPORT UPPER	1	1		1	
5	550856	. . SUPPORT LOWER	1	1		1	
6	550853	. . TANK FRONT	1	1		1	
7	550854	. . TANK REAR	1	1		1	
8	550859	. . REINFORCEMENT STRIP	4	4		4	
9	550857	. . GASKET	2	2		2	
9	550952	. . GASKET	2	2		2	
10	550860	. . SUPPORT BOTTOM	2	2		2	
11	500179	. . SCREW CAP HEX 5/16-18x3/4 G5 Z050	62	62		62	
11	500181	. . SCREW CAP HEX 5/16-18x1 G5 Z050	27	27		27	
11	500183	. . SCREW CAP HEX 5/16-18x1 1/2 G5 PT Z050	8	8		8	
12	5001083	. . NUT HEXF NYRT 5/16-18 Z050	88	88		88	
20	500195	. SCREW CAP HEX 3/8-16x2 1/2 G5 Z050	2	2		2	
21	550825	. WASHER SPECIAL	2	2		2	
22	550826	. INSULATOR MOUNTING	2	2		2	
23	N.P.N.	. WASHER / (1320875)	2	2		2	4
24	500301	. NUT HEXF STO 3/8-16 Z050	2	2		2	
25	500179	. SCREW CAP HEX 5/16-18x3/4 G5 Z050	4	4		4	
26	5001083	. NUT HEXF NYRT 5/16-18 Z050	4	4		4	
27	550858	. BRACKET MOUNTING	2	2		2	
30	502527	. SCREW CAP HEX M8-1.25x50 G8.8 Z050	4	4		4	
31	N.P.N.	. WASHER / (132866)	1	1		1	4
31	N.P.N.	. WASHERT SP / (132873)	1	1		1	4
32	N.P.N.	. WASHER FL NYL .443X.750X.125 / (132813)	1	1		1	4
33	502692	. NUT HEXF STO M8-1.25 Z050	4	4		4	
40	052428	SHROUD	1	1		1	
40	506001	TAPE RUB ADH1 CC POL 1/8" x 3/4" x 50' / GREY 2520X	AR	AR		AR	
41	502838	NUT HEX TWAY M8-1.25 N500	10	10		10	
42	502853	WASHER LO SPT 6.1x11.8x1.6 N500	10	10		10	
43	502830	SCREW CAP HEX M6-1.0x20 G8.8 N500	10	10		10	
44	052441	RUBBER PAD 100MM X 123MM	1	1		1	
44	21185073	RUBBER PAD 100MM X 123MM	1	1		1	
45	052473	PLATE / UPPER RADIATOR 40MM X 90MM	2	2		2	
47	940142	SCREW CAP HEX M8-1.25x30 G8.8 ZG603	4	4		4	
61	5001745	SCREW CAP HEX M8-1.25x25 G8.8 N500	3	3		3	

From 4-8165 To 8-9339		Date:07/2024	PAGE:Y2-0505-02

RADIATOR ASSY - BUS, MTH 40' & MTH 45E

Item#	Part	Description	XLII 45	XLII MTH40	XLII MTH45	XLII MTH45E	NOTES
61	5001736	WASHER FL 8.4x18.0x2.0 N500	3	3		3	
61	502837	NUT HEXF STO M8-1.25 N500	3	3		3	
		4) NO PARTS NUMBER					

From Y-7046 To 3-8164		Date:07/2024	PAGE:Y2-0505-50
RADIATOR ASSY - MTH			

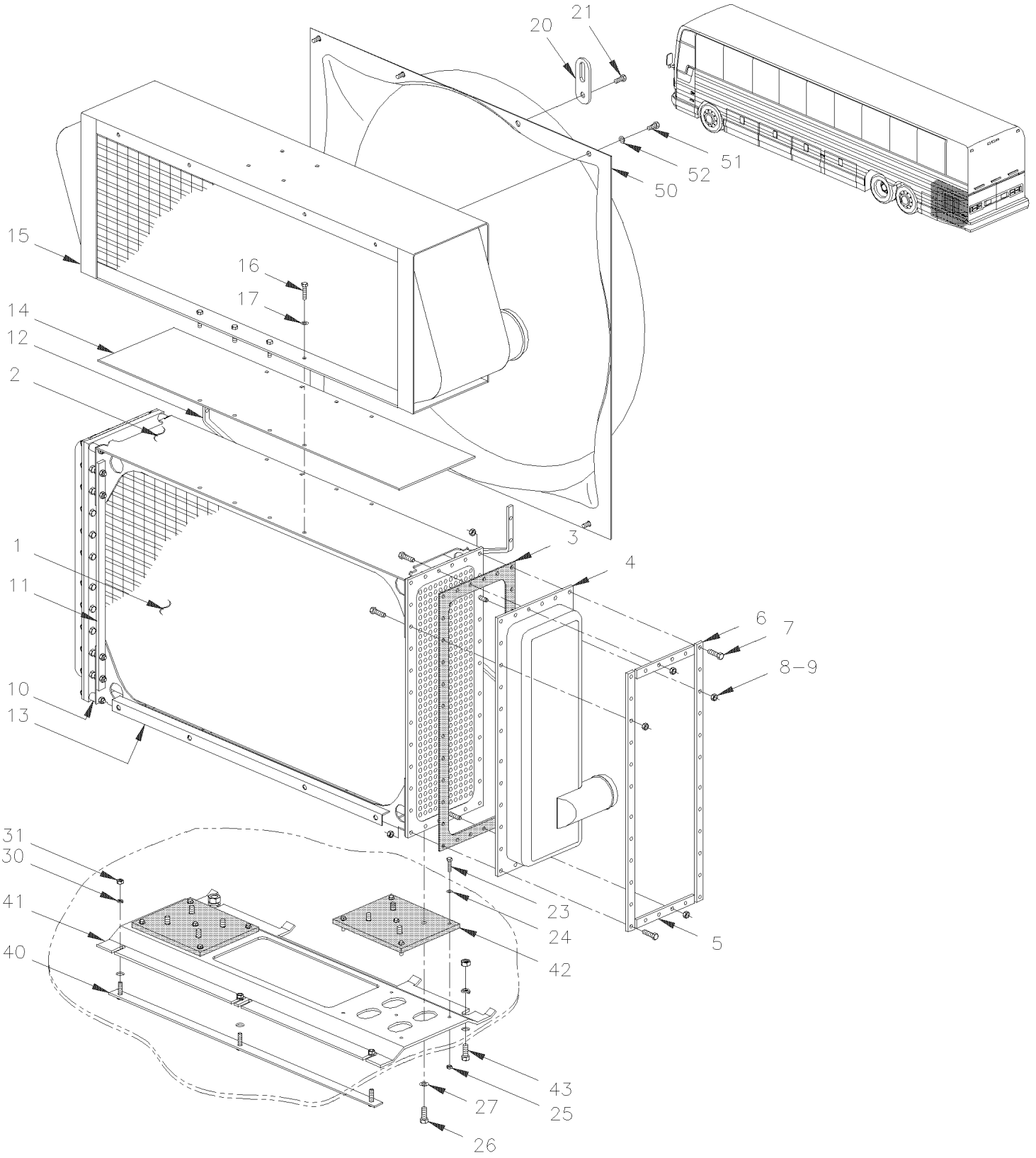

From Y-7046 To 3-8164		Date:07/2024	PAGE:Y2-0505-50

RADIATOR ASSY - MTH

Item#	Part	Description	XLII 45	XLII MTH40	XLII MTH45	XLII MTH45E	NOTES
	N.S.A.	RADIATOR ASSY / WATER & AIR COOLER		1	1	1	3
	550759	. RADIATOR ASSY / WATER		1	1	1	
1	550760	. . CORE		1	1	1	
2	550764	. . SUPPORT ASSY TOP		1	1	1	
3	550768	. . GASKET, HALF		4	4	4	
4	550761	. . TANK / RADIATOR FRONT		1	1	1	
4	550762	. . TANK / RADIATOR REAR		1	1	1	
5	550766	. . STRIP / EXTERIOR & INTERIOR 6 1/2"		8	8	8	
6	550767	. . STRIP / EXTERIOR & INTERIOR 22 1/2"		8	8	8	
7	500029	. . SCREW CAP HEX 5/16-24x1 1/2 G5 ZP		AR	AR	AR	
8	500778	. . NUT HEX 5/16-18 N500		68	68	68	
9	500446	. . WASHER FL .531x1.250x.125 Z050		72	72	72	
10	550770	. . BUSHING		4	4	4	
NS	500183	. . SCREW CAP HEX 5/16-18x1 1/2 G5 PT Z050		4	4	4	
NS	500185	. . SCREW CAP HEX 5/16-18x2 1/4 G5 Z050		4	4	4	
NS	502600	. . NUT HEX NYRT 5/16-18 Z050		4	4	4	
11	550771	. . STRIP, TIE BAR 20"		1	1	1	
12	550763	. . REINFORCEMENT STRIP "Z" SHAPE		1	1	1	
13	550765	. . SUPPORT ASSY BOTTOM		1	1	1	
NS	550103	. . RUBBER PAD, 4FT LG.		AR	AR	AR	
14	550769	. . STRIP, PLASTIC		1	1	1	
NS	500826	. . WASHER LO EXT .320x.610x.034 ZP		8	8	8	
NS	500181	. . SCREW CAP HEX 5/16-18x1 G5 Z050		8	8	8	
NS	500985	. . WASHER FL .343x.875x.125 Z050		8	8	8	
15	**Y2-0330-00**	**AIR FILTER & INTAKE - INSTALLATION WITH DETROIT S-60**					
16	500191	SCREW CAP HEX 3/8-16x1 G5 Z050		AR	AR	AR	
17	500445	WASHER FL .437x1.000x.083 Z050		AR	AR	AR	
20	052199	PLATE "OBLON" / TO FIX RADIATOR UPPER		1	1	1	
21	500195	SCREW CAP HEX 3/8-16x2 1/2 G5 Z050		1	1	1	B
NS	500935	WASHER FL .390x1.500x.083		2	2	2	B
NS	505217	SPACER 7/16" X 1 1/4"		1	1	1	B
NS	661074	BUSHING / RUBBER ¾" x 5/8" I.D.		2	2	2	B
NS	500265	NUT HEX STO 3/8-16 Z050		1	1	1	B
23	502737	SCREW CAP HEX M6-1.0x25 SS BK		12	12	12	
24	500468	WASHER FL .281x1.250x.065 Z050		15	15	15	
25	502621	NUT HEX STO M6-1.0 Z050		12	12	12	
26	500191	SCREW CAP HEX 3/8-16x1 G5 Z050		12	12	12	
27	500445	WASHER FL .437x1.000x.083 Z050		AR	AR	AR	
30	502584	WASHER LO SERR 8.2x26.3x1.8 Z050		AR	AR	AR	
31	502543	NUT HEX M8-1.25 Z050		3	3	3	
32	501332	STREET ELBOW 90º / PIPE FITTING / 1/4NPT-Mx1/4NPT-F BR		1	1	1	
NS	501308	ADAPTER / PIPE FITTING / 1/4NPT-Fx1/4NPT-M BR		1	1	1	

From Y-7046 To 3-8164		Date:07/2024	PAGE:Y2-0505-50

RADIATOR ASSY - MTH

Item#	Part	Description	XLII 45	XLII MTH40	XLII MTH45	XLII MTH45E	NOTES
NS	501027	MALE CONNECTOR / SAE 45º FITTING / #4FL-Mx1/4NPT-M BR		1	1	1	
33	501129	EXTERNAL SEAL DRAIN 1/4 NPT		1	1	1	
NS	501329	STREET ELBOW 45º / PIPE FITTING / 1/4NPT-Mx1/4NPT-F BR		1	1	1	
40	052224	ATTACHMENT, STRIP 768MM W/3 STUDS / TO FIX SUPPORT 364/364c/c		1	1	1	
41	052201	PLATE SUPPORT LOWER RADIATOR		1	1	1	
42	051836	RUBBER PAD / SUPPORT & RADIATOR 242MM x 165MM W/9 HOLES		2	2	2	
43	502780	SCREW CAP HEX M8-1.25x25 SS BK		2	2	2	
50	052197	SHROUD / W/36" FAN BLADE		1	1	1	
51	5001040	SCREW TC PAN PH #6-32x3/4 SS		4	4	4	
52	500157	WASHER FL .125x.375x.032 SS		4	4	4	
NS	506001	TAPE RUB ADH1 CC POL 1/8" x 3/4" x 50' / GREY 2520X		AR	AR	AR	
60	052110	ATTACHMENT / UPPER RADIATOR		1	1	1	
61	660253	BUSHING / RUBBER / (ONE PIECE) 1 ½" x 5/8" I.D.		1	1	1	
62	505217	SPACER 7/16" X 1 1/4"		1	1	1	
63	500935	WASHER FL .390x1.500x.083		2	2	2	
64	500195	SCREW CAP HEX 3/8-16x2 1/2 G5 Z050		1	1	1	
65	500265	NUT HEX STO 3/8-16 Z050		1	1	1	
66	500191	SCREW CAP HEX 3/8-16x1 G5 Z050		2	2	2	
67	500478	WASHER LO SPT .380x.683x.094 Z050		2	2	2	
		B) TO FIX RADIATOR PLATE UPPER					
		3) NOT SOLD ASSEMBLY					

From 4-8165 To 8-9339		Date:07/2024	PAGE:Y2-0505-51
RADIATOR ASSY - MTH 45'			

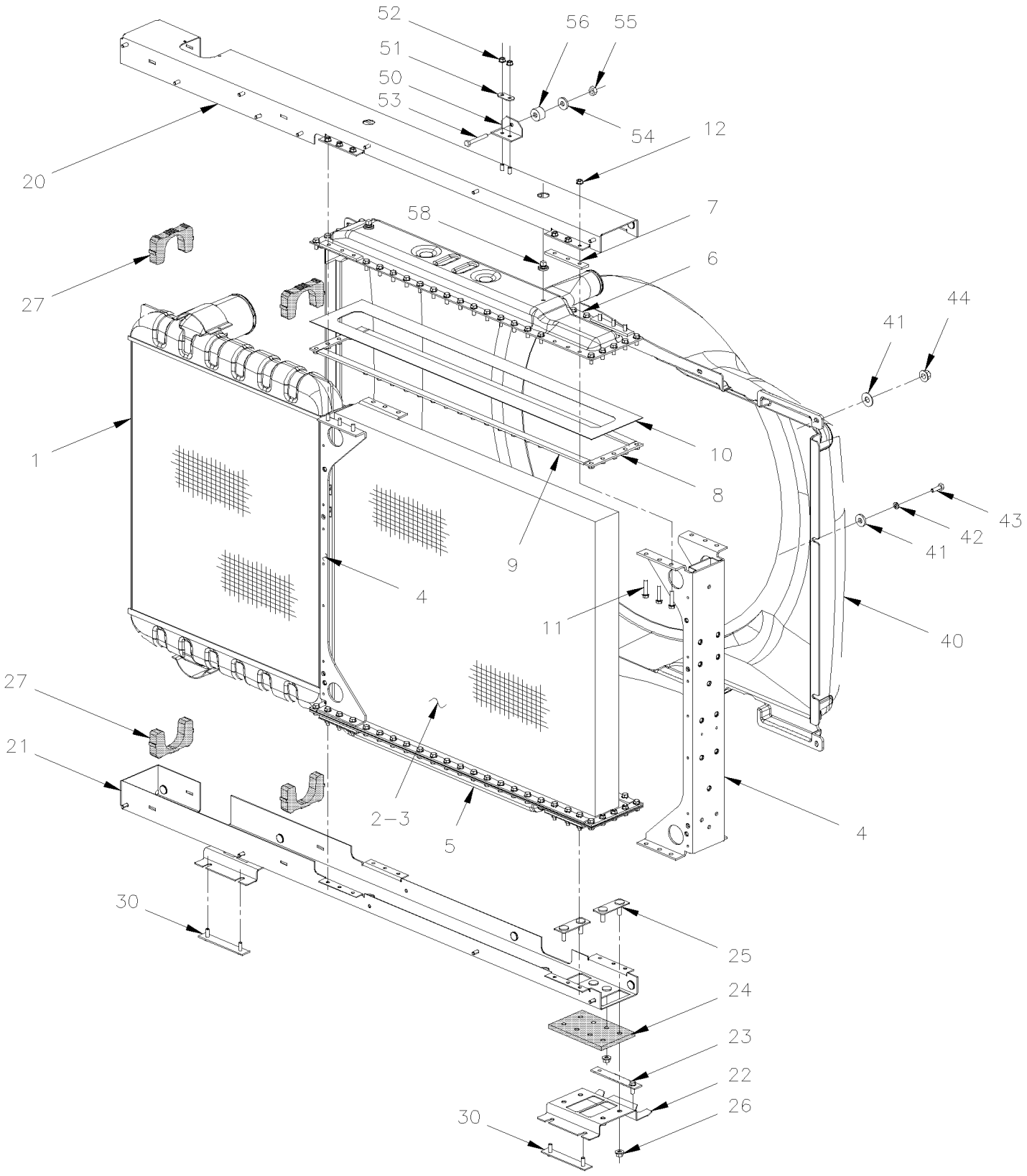

From 4-8165 To 8-9339		Date:07/2024	PAGE:Y2-0505-51

RADIATOR ASSY - MTH 45'

Item#	Part	Description	XLII 45	XLII MTH40	XLII MTH45	XLII MTH45E	NOTES
	550819	RADIATOR & AIR COOLER / SIDE/SIDE			1		A
1	550847	. AIR COOLER ASSY / SIDE BY SIDE MODEL			1		
. NS	MI06-02	. . SEE MAINTENANCE INFORMATION			1		
1	550976	. AIR COOLER ASSY / "duralite" / SIDE BY SIDE MODEL			1		
1	550959	. AIR COOLER ASSY / "TitanX" / SIDE BY SIDE MODEL			1		
2	550846	. RADIATOR ASSY			1		
3	550863	. . CORE			1		
4	550866	. . SIDE MEMBER			2		
5	550865	. . TANK BOTTOM			1		
6	550864	. . TANK TOP			1		
7	550867	. . REINFORCEMENT STRIP (TAPPED)			8		
8	550868	. . REINFORCEMENT STRIP			4		
9	550859	. . REINFORCEMENT STRIP			1		
10	550857	. . GASKET			2		
10	550952	. . GASKET			2		
11	500179	. . SCREW CAP HEX 5/16-18x3/4 G5 Z050			74		
11	500183	. . SCREW CAP HEX 5/16-18x1 1/2 G5 PT Z050			24		
12	5001083	. . NUT HEXF NYRT 5/16-18 Z050			76		
20	550869	. SUPPORT UPPER			1		
21	550870	. SUPPORT LOWER STEEL			1		A
21	053525	. SUPPORT LOWER STAINLESS STEEL			1		B
22	550861	. SUPPORT LOWER STEEL			2		A
22	053529	. SUPPORT LOWER STAINLESS STEEL			1		B
23	550862	. SUPPORT LOWER ASSY			4		
24	550872	. RUBBER PAD			2		
25	550871	. INSIDE STRIP SUPPORT			4		
26	500301	. NUT HEXF STO 3/8-16 Z050			16		
27	550873	. INSULATOR MOUNTING			24		
30	052497	ATTACHMENT STRIP 150MM W/2 STUDS			4		
40	052464	SHROUD / W/36" FAN BLADE			1		
41	500831	SCREW CAP HEX 3/8-16x2 G5 ZP			AR		
42	500942	WASHER LO SPT 8.1x14.8x2.0 N500			AR		
43	500836	SCREW CAP HEX 5/16-18x3/4 G5 N500			AR		
44	502902	NUT HEXF NYRT 5/16-18 N500			AR		
50	052525	ANGLE SUPPORT, UPPER RADIATOR			1		
51	052557	PLATE HOLDING / W/2 HOLES 1" C/C			1		
52	502902	NUT HEXF NYRT 5/16-18 N500			4		
53	500207	SCREW CAP HEX 3/8-16x2 1/2 G5 N500			1		
54	500832	WASHER FL .406x.812x.065 N500			1		
55	500208	NUT HEX STO 3/8-16 N500			1		
56	661074	BUSHING / RUBBER ¾" x 5/8" I.D.			2		
57	505217	SPACER 7/16" X 1 1/4"			1		

From 4-8165 To 8-9339		Date:07/2024	PAGE:Y2-0505-51

RADIATOR ASSY - MTH 45'

Item#	Part	Description	XLII 45	XLII MTH40	XLII MTH45	XLII MTH45E	NOTES
58	501037	MALE ELBOW 90º / SAE 45º FITTING / #4FL-Mx1/4NPT-M BR			1		
59	052936	KIT LOWER SUPPORT RADIATOR STAINLESS STEEL			1		
. NS	053525	. SUPPORT LOWER STAINLESS STEEL			1		
. NS	053529	. SUPPORT LOWER STAINLESS STEEL			1		
		A) FOR PRODUCT IMPROVMENT FOR LOWER STAINLESS SUPPORT ASK FOR KIT # 052936					
		B) THIS PART IT NOT INCLUDE WITH # 550819					

From Y-7046 To 8-9339		Date:07/2024	PAGE:Y2-0510-00
SURGE TANK			

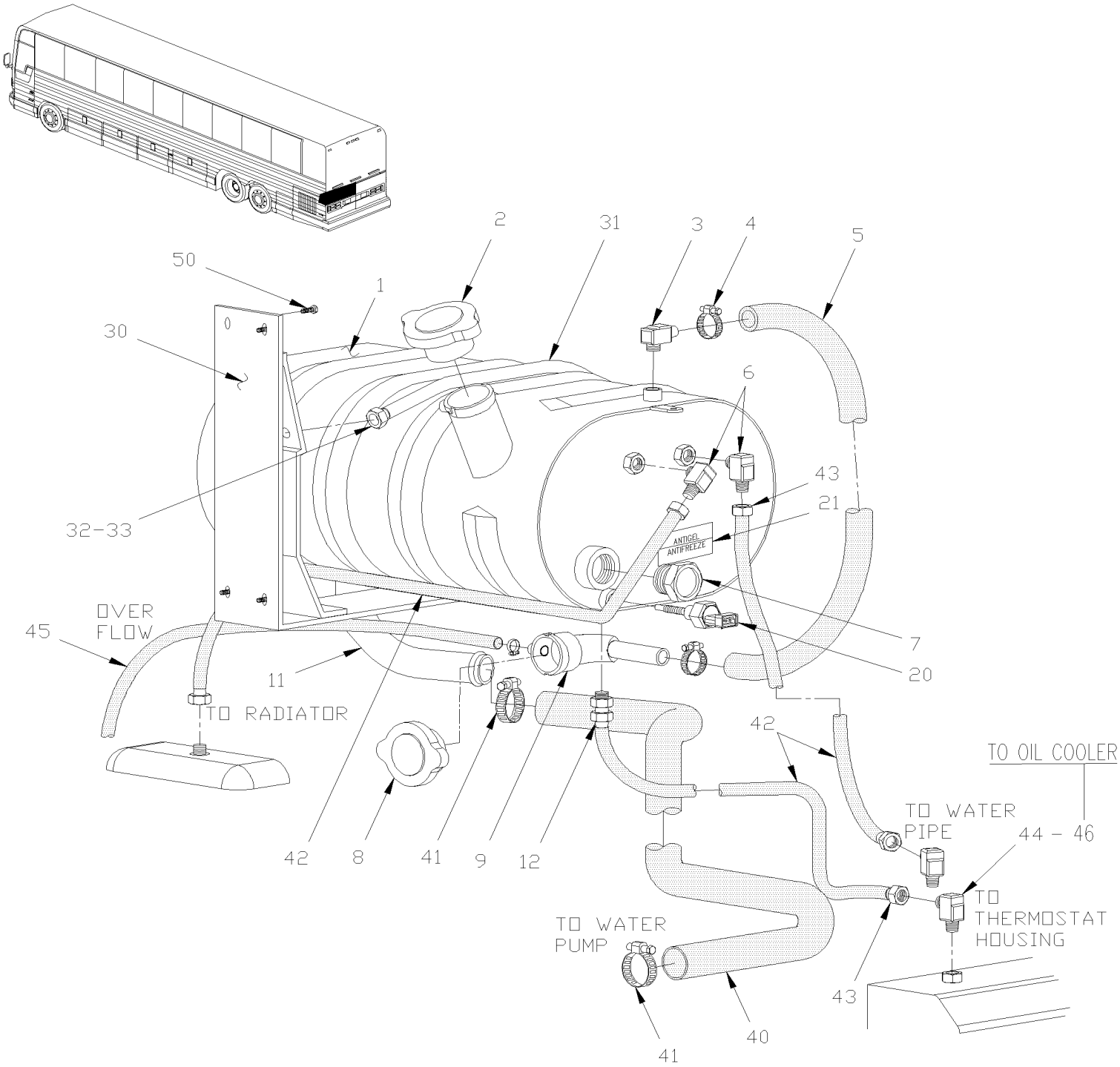

From Y-7046 To 8-9339		Date:07/2024	PAGE:Y2-0510-00

SURGE TANK

Item#	Part	Description	XLII 45	XLII MTH40	XLII MTH45	XLII MTH45E	NOTES
	052287P	TANK ASSY (S.S.) To 3-8164	1	1	1	1	
	Call order desk	TANK ASSY (S.S.) From 4-8165	1	1	1	1	P
1	052286	. TANK (S.S.) To 3-8164	1	1	1	1	
1	052528	. TANK (S.S.) From 4-8165	1	1	1	1	
2	052355	. . CAP FILLER	1	1	1	1	
3	5011025	. MALE ELBOW 90º / BEADED HOSE BARB / #10x1/4NPT-M	1	1	1	1	
4	504019	. HOSE CLAMP / 9/16"-1"1/16 SS / HS-10	2	2	2	2	
5	051554	. HOSE #10 560MM	1	1	1	1	
6	501037	. MALE ELBOW 90º / SAE 45º FITTING / #4FL-Mx1/4NPT-M BR	2	2	2	2	
7	550618	. SIGHT GLASS 1" NPT To 3-8164	1	1	1	1	
7	550850	. SIGHT GLASS 1/2" NPT From 4-8165	1	1	1	1	
. NS	N8881803	. . BODY ½ NPT From 4-8165	1	1	1	1	
. NS	N8881804	. . NUT BODY TO FIX GLASS From 4-8165	1	1	1	1	
. NS	N8881805	. . GLASS From 4-8165	1	1	1	1	
. NS	N8881806	. . O-RING From 4-8165	1	1	1	1	
8	550606	. CAP PRESSURE / OVER 14 LBS	1	1	1	1	
9	051495	. PIPE ASSY	1	1	1	1	
11	5011036	. MALE ELBOW 90° / COLLAR FITTING / 1NPT-Mx#16 STL	1	1	1	1	
12	501027	. MALE CONNECTOR / SAE 45º FITTING / #4FL-Mx1/4NPT-M BR	1	1	1	1	
20	562395	. SENSOR PROBE "LOW LEVEL COOLANT" / 1/4" NPT	1	1	1	1	
21	050682	. DECAL / ANTIFREEZE / ENGLISH & FRANCAIS To 5-8404	1	1	1	1	
21	052574	. DECAL / ANTIFREEZE / ENGLISH & SPANISH To 5-8404	1	1	1	1	
21	052635	. DECAL SPEC / ANTIFREEZE / W/ "DETROIT" ENGINE / ENGLISH & FRANCAIS From 5-8405	1	1	1	1	
30	052250	. SUPPORT EXPANSION TANK ASSY To 2-7888	1	1	1	1	
30	052483	. SUPPORT EXPANSION TANK ASSY From 2-7889 To 3-8164	1	1	1	1	
30	052501	. SUPPORT EXPANSION TANK ASSY From 4-8165 To 4-8229	1	1	1	1	
30	052565	. SUPPORT EXPANSION TANK ASSY From 4-8230	1	1	1	1	
31	052245	. ROD	1	1	1	1	
32	502543	. NUT HEX M8-1.25 Z050	2	2	2	2	
33	500868	. NUT HEX NYRT M8-1.25 Z050	2	2	2	2	
40	052342	HOSE 1" I.D. 1574MM To Y-7280	1	1	1	1	
40	052388	HOSE 1" I.D. 1345MM From Y-7281 To 3-8164	1	1	1	1	
40	052510	HOSE 1" I.D. X 1194MM From 4-8165	1	1	1	1	
40	503579	. HOSE 1" I.D. X 50' / "GREEN STRIPE"	AR	AR	AR	AR	
NS	5011147	FEMALE CONNECTOR SWIVEL / COLLAR FITTING / #16JIC-Fx#16 STL	1	1	1	1	
NS	5011255	MALE ELBOW 90° / JIC 37° FITTING / #16JIC-MxM33-2.0 ORB-M STL	1	1	1	1	
41	504658	HOSE CLAMP / 13/16"-1"3/4 / C.T. 9420	2	2	2	2	
42	052333	HOSE ASSY / #4 990MM To 3-8164	3	3	3	3	
42	052507	HOSE ASSY / TO RADIATOR / #4 655MM From 4-8165	1	1	1	1	
42	052508	HOSE ASSY / TO THERMOSTAT / #4 956MM From 4-8165	1	1	1	1	
42	503692	. HOSE / (SAFETY STRIPE) / 1/4" I.D. 50' / S.L.	AR	AR	AR	AR	
43	501347	. FEMALE CONNECTOR SWIVEL / PUSH-LOK FITTING #4JIC-Fx#4 BR	2	2	2	2	

From Y-7046 To 8-9339		Date:07/2024	PAGE:Y2-0510-00

SURGE TANK

Item#	Part	Description	XLII 45	XLII MTH40	XLII MTH45	XLII MTH45E	NOTES
44	501037	MALE ELBOW 90º / SAE 45º FITTING / #4FL-Mx1/4NPT-M BR	1	1	1	1	
45	503047	HOSE / RUBBER #6 / S.L.	AR	AR	AR	AR	
46	052509	HOSE ASSY TEFLON #4 1170MM From 4-8165	1	1	1	1	
50	500417	SCREW TP PAN PH #6x3/8 Z050	4	4	4	4	
NS	685125	ANTIFREEZE / ETHYLENE GLYCOL / SPEC #7SE298 & TMC RP-329, T	AR	AR	AR	AR	
. NS	MI04-06	. SEE MAINTENANCE INFORMATION	1	1	1	1	
		P) CALL ORDER DESK FOR SPECIFIC APPLICATION (V.I.N.)					

From Y-7046 To 3-8164		Date:07/2024	PAGE:Y2-0518-00
RADIATOR SEALING FRAME			

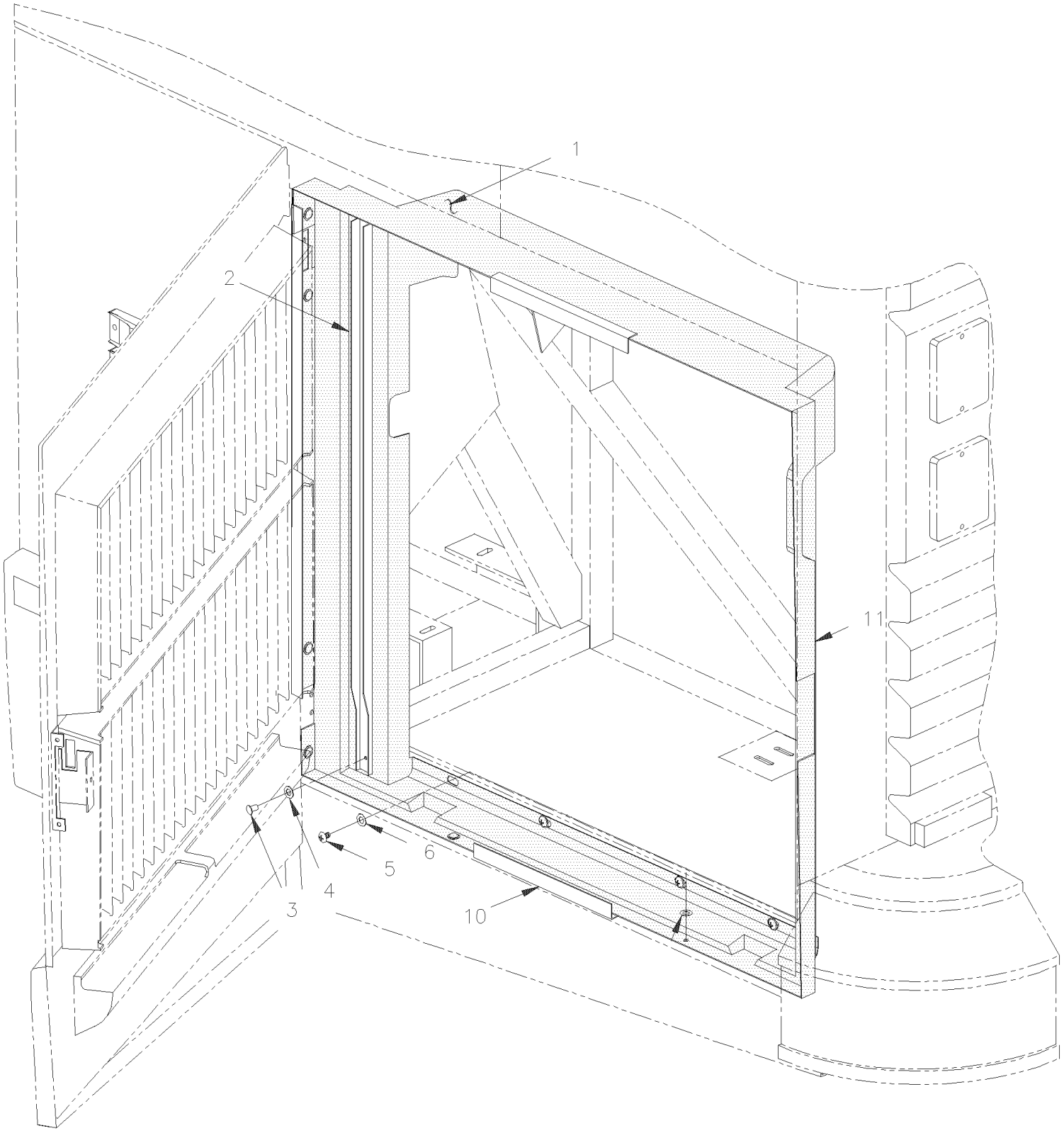

From Y-7046 To 3-8164		Date:07/2024	PAGE:Y2-0518-00

RADIATOR SEALING FRAME

Item#	Part	Description	XLII 45	XLII MTH40	XLII MTH45	XLII MTH45E	NOTES
1	052354	FRAME, SEALING To Y-7264	1				
1	052396	FRAME, SEALING From Y-7265	1				
1	052193	FRAME, SEALING		1			
1	052192	FRAME, SEALING		1	1		
1	052193	FRAME, SEALING				1	
NS	506003	TAPE RUB ADH1 CC POL 3/16" x 3/4" x 40' / GREY 2520X	AR	AR	AR	AR	
NS	506007	TAPE RUB ADH1 CC NEO 3/4" x 1" x 10' / BLACK 1220	AR	AR	AR	AR	
NS	506302	RUBBER EXTRUSION TRIM SEAL / GRIP .024 / 7/16" HOLLOW BULB C.T.L.		AR	AR		
2	051986	U CHANEL RETAINER	1	1	1	1	
3	504340	RIVET POP DOME OE 1/8x3/16 SS	AR	AR	AR	AR	
4	502630	WASHER FL .156x.375x.049 Z050	AR	AR	AR	AR	
5	500179	SCREW CAP HEX 5/16-18x3/4 G5 Z050	8	8	8	8	
6	500874	WASHER FL 8.4x17.0x1.6 Z050	8	8	8	8	
10	212056	RETAINER 12" / WELDED TO FRAME	2	2	2	2	
11	212055	RETAINER 32" / WELDED TO FRAME	2	2	2	2	

From 4-8165 To 8-9339		Date:07/2024	PAGE:Y2-0518-01
RADIATOR SEALING FRAME - BUS, MTH 40' & MTH-45E			

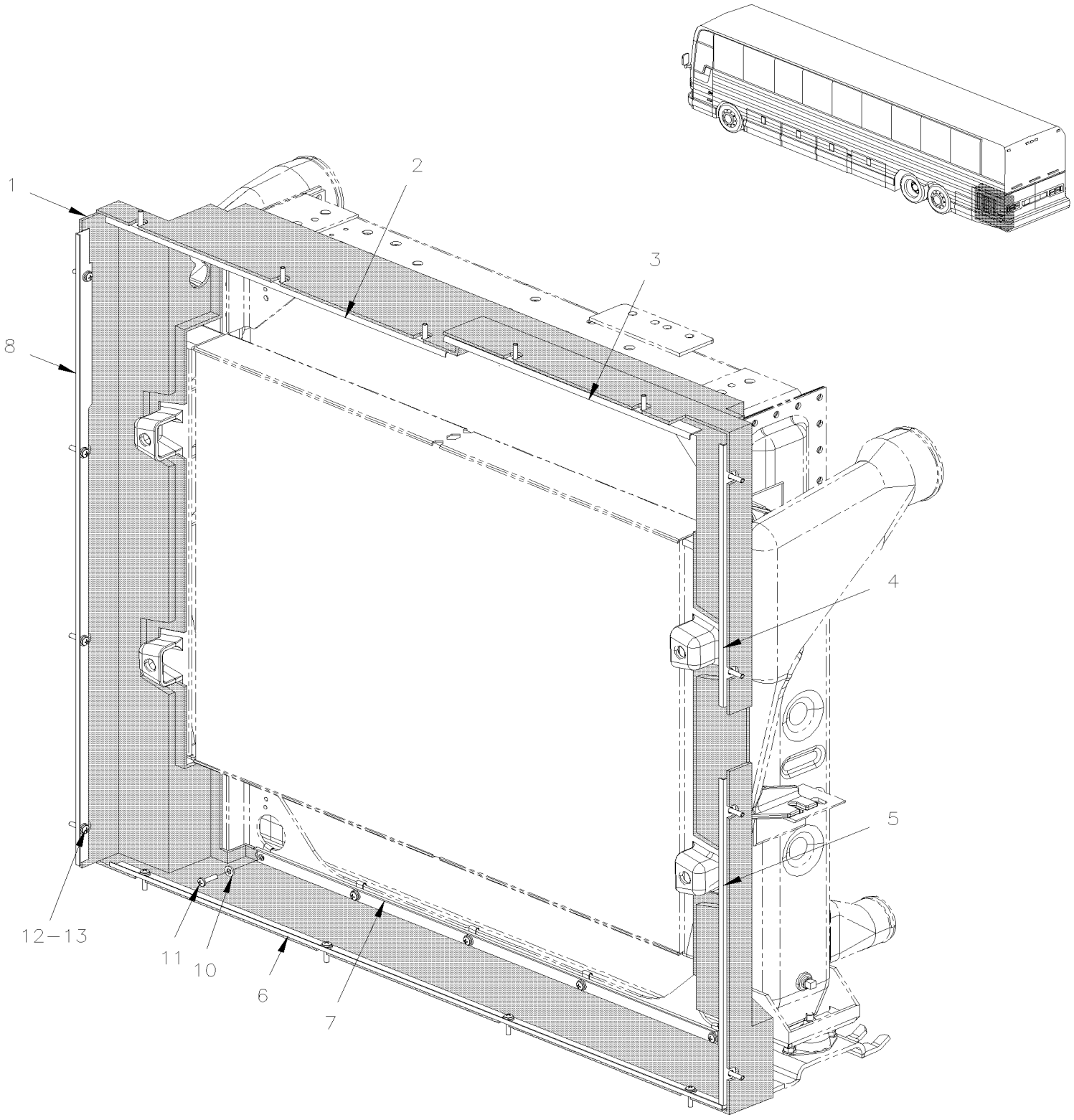

From 4-8165 To 8-9339		Date:07/2024	PAGE:Y2-0518-01

RADIATOR SEALING FRAME - BUS, MTH 40' & MTH-45E

Item#	Part	Description	XLII 45	XLII MTH40	XLII MTH45	XLII MTH45E	NOTES
1	052523	FRAME, SEALING		1		1	
NS	052524	CLOSING PLATE LOWER BACKWARD / W/LARGE A/C		1		1	
NS	5001067	WASHER FL .128x.312x.032 SS		4		4	
NS	504339	RIVET POP DOME OE 1/8x3/8 SS		4		4	
1	052446	FRAME, SEALING	1				
2	052458	ANGLE REINFORCEMENT 611MM	1	1		1	
3	052457	ANGLE REINFORCEMENT 442MM	1	1		1	
4	052454	ANGLE REINFORCEMENT 395MM	1	1		1	
5	052453	ANGLE REINFORCEMENT 491MM	1	1		1	
6	052452	ANGLE REINFORCEMENT 827MM	1	1		1	
7	052455	ANGLE REINFORCEMENT 1100MM	1	1		1	
8	052459	ANGLE REINFORCEMENT 957MM	1	1		1	
10	502638	WASHER FL .312x.734x.065 N500	10	10		10	
11	502830	SCREW CAP HEX M6-1.0x20 G8.8 N500	10	10		10	
11	502738	NUT SPR U M6-1.0 0.6-4.0	10	10		10	
12	500526	SCREW TP CAP HEXW #12x3/4 N500	17	17		17	
13	500877	WASHER FL .250x.562x.065 N500	17	17		17	

From 4-8165 To 8-9339		Date:07/2024	PAGE:Y2-0518-50
RADIATOR SEALING FRAME - MTH 45'			

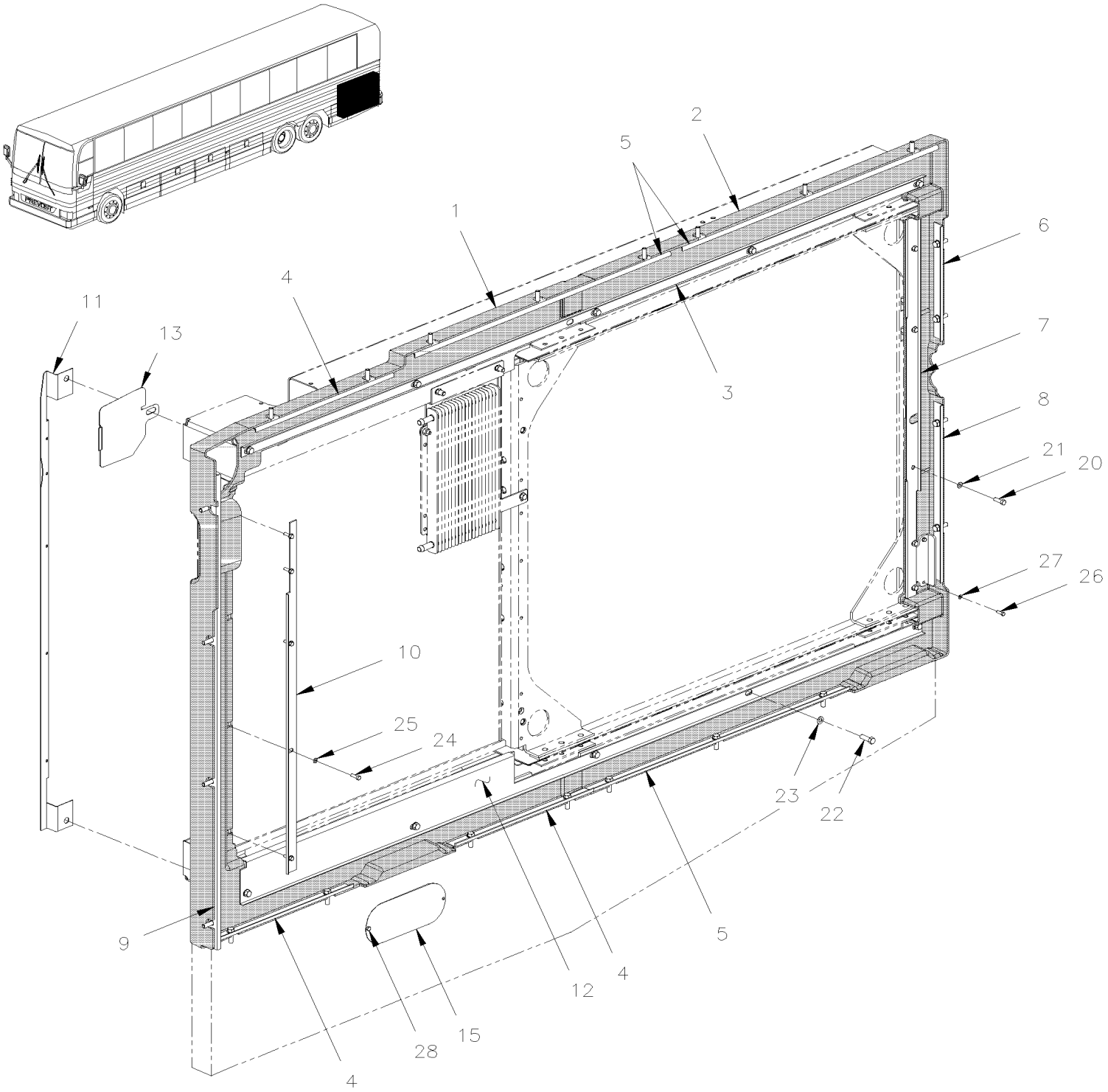

From 4-8165 To 8-9339		Date:07/2024	PAGE:Y2-0518-50

RADIATOR SEALING FRAME - MTH 45'

Item#	Part	Description	XLII 45	XLII MTH40	XLII MTH45	XLII MTH45E	NOTES
1	052546	FRAME, SEALING / FORWARD To 5-8805			1		
1	052622	FRAME, SEALING / FORWARD TOP SECTION From 5-8806			1		
2	052505	FRAME, SEALING / BACKWARD To 5-8805			1		
2	052623	FRAME, SEALING / FORWARD BOTTOM SECTION From 5-8806			1		
NS	506001	TAPE RUB ADH1 CC POL 1/8" x 3/4" x 50' / GREY 2520X			AR		
NS	506004	TAPE RUB ADH1 CC POL 3/8" x 1/2" x 20' / GREY 2520X			AR		
NS	506302	RUBBER EXTRUSION TRIM SEAL / GRIP .024 / 7/16" HOLLOW BULB C.T.L.			AR		
3	052513	ANGLE REINFORCEMENT 1628.4MM To 5-8805			1		
3	052638	ANGLE REINFORCEMENT 800MM From 5-8806			1		
4	052457	ANGLE REINFORCEMENT 442MM			3		
5	052458	ANGLE REINFORCEMENT 611MM			2		
6	052549	ANGLE REINFORCEMENT 230MM			1		
7	052521	ANGLE REINFORCEMENT 760MM			1		
8	052548	ANGLE REINFORCEMENT 355MM			1		
9	052459	ANGLE REINFORCEMENT 957MM To 5-8805			1		
9	052637	ANGLE REINFORCEMENT 850MM From 5-8806			1		
10	052519	ANGLE REINFORCEMENT 700MM			1		
11	052537	ANGLE REINFORCEMENT 915MM			1		
12	052543	ANGLE REINFORCEMENT 1613.4MM			1		
13	052544	CLOSING PANEL ACCESS TRAP To 5-8805			1		
13	052639	ANGLE REINFORCEMENT 860MM From 5-8806			1		
15	052200	CLOSING PLATE 80MM X 190MM			1		
20	502848	SCREW TC CAP HEXF 1/4-20x3/4 N500			6		
21	955920	WASHER LO SPT 6.5x11.5x1.6 ZP			6		
22	502902	NUT HEXF NYRT 5/16-18 N500			10		
23	192288	WASHER FL 8.4x18.0x2.0 ZG603			10		
24	500526	SCREW TP CAP HEXW #12x3/4 N500			38		
25	500877	WASHER FL .250x.562x.065 N500			38		
26	504339	RIVET POP DOME OE 1/8x3/8 SS			AR		
27	5001067	WASHER FL .128x.312x.032 SS			AR		

From Y-7046 To 3-8164		Date:07/2024	PAGE:Y2-0520-00
FAN DRIVE - INSTALLATION - SHORT			

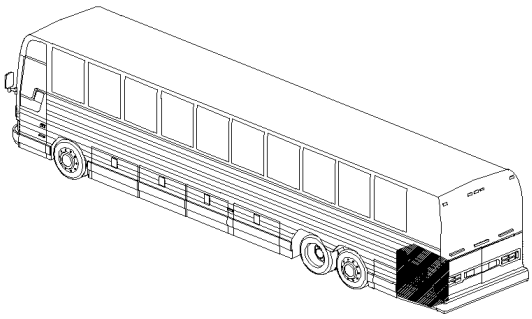

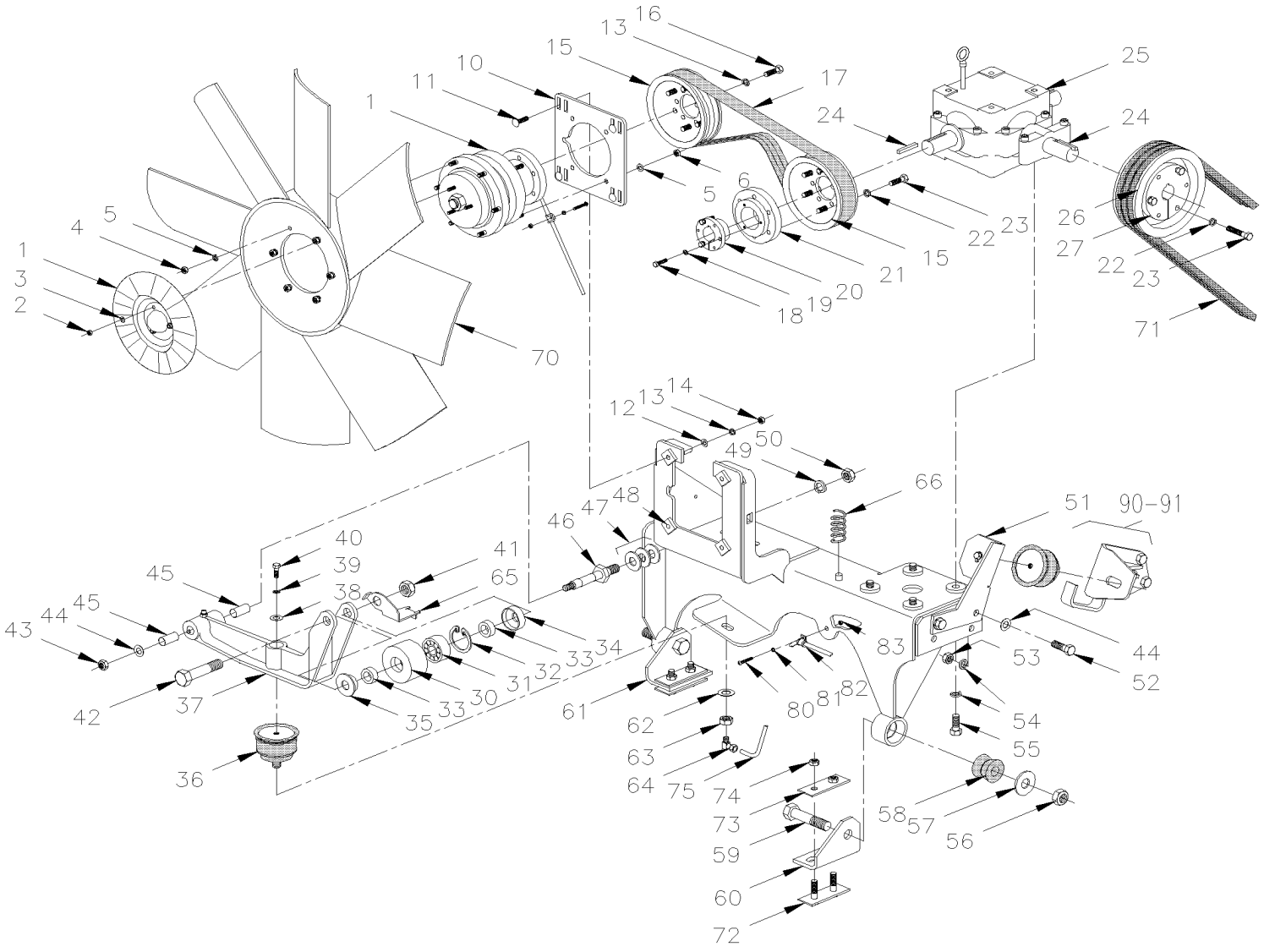

From Y-7046 To 3-8164		Date:07/2024	PAGE:Y2-0520-00

FAN DRIVE - INSTALLATION - SHORT

Item#	Part	Description	XLII 45	XLII MTH40	XLII MTH45	XLII MTH45E	NOTES
	052006P	FAN DRIVE ASSY	1	1	1	1	
1	**Y2-0540-00**	**. FAN CLUTCH ASSY - #550803 - BUS**					
1	**Y2-0540-50**	**. FAN CLUTCH ASSY - #550802 - MTH**					
2	502511	. . NUT HEX NYRT M6-1.0 Z050	3	3	3	3	
3	502573	. . WASHER FL 6.4x12.5x1.6 SS	3	3	3	3	
4	502543	. . NUT HEX M8-1.25 Z050	6	6	6	6	
5	500874	. . WASHER FL 8.4x17.0x1.6 Z050	8	8	8	8	
NS	502644	. . WASHER FL 10.5x30.0x2.5 Z050		8	8	8	
6	502744	. . NUT HEX STO M8-1.25 Z050	4	4	4	4	
NS	500680	. . NUT HEX STO M10-1.5 Z050		4	4	4	
10	052196	. PLATE TRANSITION / FAN CLUTCH & SUPPORT		1	1	1	
11	5001208	. SCREW CRG M8-1.25x30 G8.8 Z050	4	4	4	4	
12	500874	. WASHER FL 8.4x17.0x1.6 Z050	8	8	8	8	
13	5001003	. WASHER LO SPT 8.1x12.7x2.0 Z050	10	10	10	10	
14	502543	. NUT HEX M8-1.25 Z050	4	4	4	4	
15	051830	. PULLEY / W/10RIB X 6.10" DIA	2	2	2	2	
16	502528	. SCREW CAP HEX M8-1.25x20 G8.8 EMN	6	6	6	6	
17	506688	. MULTI V-BELT / 10 RIB 51" 5100510-51	1	1	1	1	
18	500177	. SCREW CAP HEX 1/4-20x1 G8 ZP	3	3	3	3	
19	500473	. WASHER LO SPT .262x.489x.062 Z050	3	3	3	3	
20	550690	. CONE BUSHING 1 1/4 I.D X 1 13/16 O.D. X 2 5	1	1	1	1	
21	050907	. COUPLING FAN / TO FIX PULLEY	3	3	3	3	
22	500478	. WASHER LO SPT .380x.683x.094 Z050	6	6	6	6	
23	500048	. SCREW CAP HEX 3/8-24x1 1/4 G5 ZP	6	6	6	6	
24	550186	. KEY 1/4" X 1/4" X 1 1/4"	2	2	2	2	
25	**Y2-0525-00**	**. GEARBOX "SUPERIOR" - #550789, 550810 & 550897**					
26	051603	. PULLEY (3V X 7.40 DIA)	1	1	1	1	
27	550691	. CONE BUSHING 1 1/4 I.D X 3 O.D. X 4 5/8 O.D	1	1	1	1	
30	052208	. PULLEY ASSY W/BEARING & SEAL / 43MM x 78MM	1	1	1	1	
30	052676	. PULLEY ASSY W/BEARING & SEAL / 54MM x 75MM	1	1	1	1	A
30	052207	. . PULLEY BELT TENSIONER / 43MM x 78MM O.D.	1	1	1	1	
30	052677	. . PULLEY / 54MM WIDE x 75MM O.D.	1	1	1	1	A
31	507340	. . BALL BEARING 20 ID x 52 OD x 22.2 W	1	1	1	1	
31	510618	. . BALL BEARING DBL ROW / 30MM x 62MM x 27 W	1	1	1	1	A
32	504095	. . RING RETAINER / INT 2.00 x 2.12 x .062	1	1	1	1	
32	504040	. . RING RETAINER / INT 2.440 x 1.860 x 0.078 STL BLK	1	1	1	1	A
33	052205	. . SPACER 20MM I.D. X 12.5MM TH	2	2	2	2	
33	052627	. . BUSHING TRANSFER FAN	2	2	2	2	A
34	507361	. . SEAL	1	1	1	1	
34	507371	. . SEAL	1	1	1	1	A
35	507360	. . SEAL	1	1	1	1	
35	507371	. . SEAL	1	1	1	1	A

From Y-7046 To 3-8164		Date:07/2024	PAGE:Y2-0520-00

FAN DRIVE - INSTALLATION - SHORT

Item#	Part	Description	XLII 45	XLII MTH40	XLII MTH45	XLII MTH45E	NOTES
NS	680500	. . GREASE MERITOR / 400GR	AR	AR	AR	AR	
NS	680752	. . GREASE LITHIUM / BLUE	AR	AR	AR	AR	A
36	950208	. BELLOW ASSY / BELT TENSIONER / 3" O.D.	2	2	2	2	
. NS	504695	. . HOSE CLAMP STEPLESS SPRING SS / OETIKER / 2.9-3.3	1	1	1	1	
37	051991	. ARM, BELT TENSIONER / IRON USE W 45MM WIDE PULLEY	1	1	1	1	B
37	052624	. ARM, BELT TENSIONER / IRON USE W 54MM WIDE PULLEY	1	1	1	1	A
38	500985	. WASHER FL .343x.875x.125 Z050	1	1	1	1	
39	500476	. WASHER LO SPT .317x.586x.078 Z050	1	1	1	1	
40	5001132	. SCREW CAP HEX 5/16-18x7/8 G5 Z050	1	1	1	1	
41	500735	. NUT HEX STO 3/4-16 ZP	3	3	3	3	
42	500145	. SCREW CAP HEX 3/4-16x3 1/2 G5 Z050	3	3	3	3	
42	983296	. SCREW CAP HEX M20-2.5x90 G10.9 ZP	1	1	1	1	A S
43	500811	. NUT HEX STO M12-1.75 G500	1	1	1	1	
43	5001628	. NUT HEX NYRT M10-1.5 SS	1	1	1	1	S
44	500446	. WASHER FL .531x1.250x.125 Z050	1	1	1	1	
44	500270	. WASHER FL .406x1.000x.063 SS	1	1	1	1	S
45	507293	. BUSHING NYLINED .625x.750x.750	2	2	2	2	
46	052003	. PIVOT / TO FIX TENSIONER TO SUPPORT	1	1	1	1	
46	052670	. PIVOT / TO FIX TENSIONER TO SUPPORT	1	1	1	1	
46	501497	. GREASE FITTING / 1/4-28	1	1	1	1	
47	500449	. WASHER FL .625x1.500 SS	AR	AR	AR	AR	
48	052198	. SUPPORT FAN CLUTCH & GEAR BOX / SHORT To 2-7809	1	1	1	1	
48	059056	. SUPPORT FAN CLUTCH & GEAR BOX / SHORT From 2-7810	1	1	1	1	
49	500802	. WASHER LO SPT 16.2x37.4x3.5 Z050	1	1	1	1	
50	502588	. NUT HEX M16-2.0 ZP	1	1	1	1	
51	052346	SUPPORT / BELLOW TENSIONNER To 2-7809	1				
51	059050	SUPPORT / BELLOW TENSIONNER From 2-7810	1				
51	052066	SUPPORT / BELLOW TENSIONNER To 2-7809		1	1	1	
51	059049	SUPPORT / BELLOW TENSIONNER From 2-7810		1	1	1	
52	500088	SCREW CAP HEX 1/2-20x1 1/2 G5 ZP	2	2	2	2	
53	500716	NUT HEX 1/2-20 Z050	2	2	2	2	
54	500482	WASHER LO SPT .506x.873x.125 Z050	6	6	6	6	
55	500214	SCREW CAP HEX 1/2-13x1 1/4 G5 Z050	4	4	4	4	
57	500451	WASHER FL .812x2.000x.148 ZP	2	2	2	2	
58	630002	BUSHING / RUBBER / (TWO PIECES) 1" x 1.005" I.D.	2	2	2	2	
NS	507347	SPACER / BUSHING	2	2	2	2	
60	052347	SUPPORT, ANGLE / FRONT To 2-7809	1				
60	059054	SUPPORT, ANGLE / FRONT From 2-7810	1				
60	052123	SUPPORT, ANGLE / FRONT To 2-7809		1	1	1	
60	059053	SUPPORT, ANGLE / FRONT From 2-7810		1	1	1	
61	052348	SUPPORT, ANGLE / REAR To 2-7809	1				
61	059052	SUPPORT, ANGLE / REAR From 2-7810	1				

From Y-7046 To 3-8164		Date:07/2024	PAGE:Y2-0520-00

FAN DRIVE - INSTALLATION - SHORT

Item#	Part	Description	XLII 45	XLII MTH40	XLII MTH45	XLII MTH45E	NOTES
61	052124	SUPPORT, ANGLE / REAR To 2-7809		1	1	1	
61	059051	SUPPORT, ANGLE / REAR From 2-7810		1	1	1	
62	5001150	WASHER FL 17.0x30.0x3.0 N500	1	1	1	1	
63	500792	NUT HEX 5/8-11 Z050	1	1	1	1	
64	501808	MALE ELBOW 45º / SAE 45º FITTING / #4FL-Mx1/8NPT-M BR	1	1	1	1	
65	052206	SPRING ATTACHMENT W/45MM WIDE PULLEY	1	1	1	1	
66	502247	SPRING COMPRESSION / 1.250 O.D. x 2.5 x .125	1	1	1	1	
70	550686	FAN ASSY / CW 32" / 9 BLADES PLASTIC	1				
70	550757	FAN ASSY / CW 36" / 8 BLADES PLASTIC		1	1	1	
71	506691	V-BELT / AX-73 9012-2073	3	3	3	3	
72	051779	ATTACHMENT PLATE ASSY / TO FIX ANGLE TO FLOOR	2	2	2	2	
73	050706	SPACER 3/8" TH	AR	AR	AR	AR	
73	050705	SPACER 1/4" TH	AR	AR	AR	AR	
74	500714	NUT HEX STO 7/16-20 Z050	4	4	4	4	
NS	500666	NUT SPR FL REC 7/16-20 .69x.91	4	4	4	4	
75	031145	HOSE ASSY TEFLON #4 611MM	1	1	1	1	
80	500574	SCREW MA TR PH #10-24x1 1/4 SS	1	1	1	1	
81	500470	WASHER LO SPT .193x.334x.047 Z050	2	2	2	2	
82	560503	CLAMP / 1/4" I.D.	1	1	1	1	
83	500786	NUT HEX #10-24 Z050	1	1	1	1	
90	052050	SUPPORT BELLOW TENTIONER To 2-7809	1	1	1	1	
90	059055	SUPPORT BELLOW TENSIONER From 2-7810	1	1	1	1	
91	**Y2-0125-00**	**BELTS TENSIONERS - WITH DETROIT S-60**					
NS	052689	KIT, RETROFIT ARM W/54MM PULLEY	1	1	1	1	
		A) THIS PART ARE INCLUDE WITH NEW ARM ASSY # 052689					
		B) THIS ARM IT SUPPERSEEDED BY # 052689 ARM ASSY W/PULLEY					
		S) SERVICE					

From 4-8165 To 6-8814		Date:07/2024	PAGE:Y2-0520-01
FAN DRIVE - INSTALLATION - SHORT			

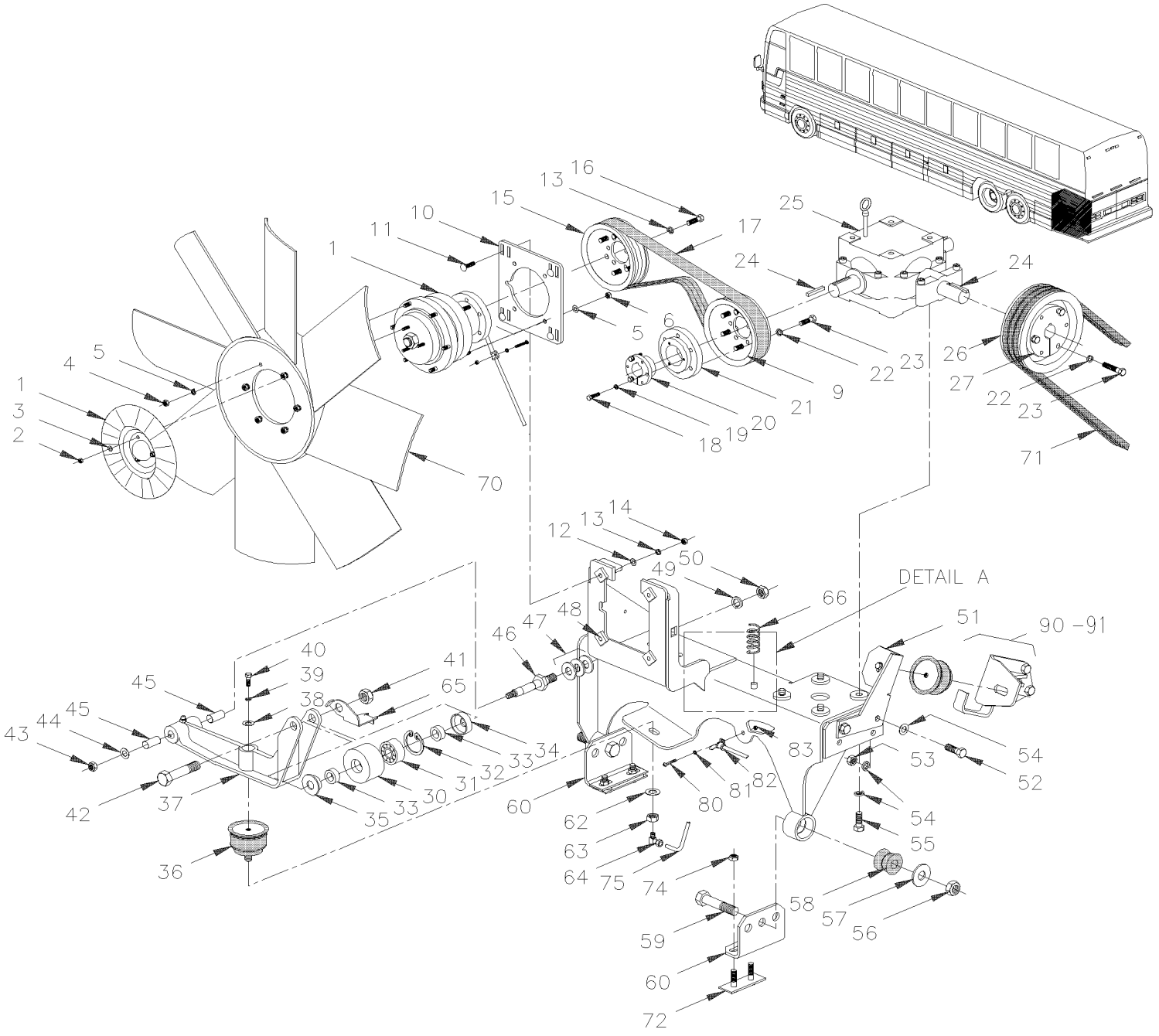

From 4-8165 To 6-8814		Date:07/2024	PAGE:Y2-0520-01

FAN DRIVE - INSTALLATION - SHORT

Item#	Part	Description	XLII 45	XLII MTH40	XLII MTH45	XLII MTH45E	NOTES
	N.S.A.	FAN DRIVE ASSY	1	1		1	3
1	**Y2-0540-02**	**. FAN CLUTCH ASSY - #550836 - BUS, MTH 40' & MTH-45E**					
2	502511	. . NUT HEX NYRT M6-1.0 Z050	3	3		3	
3	502573	. . WASHER FL 6.4x12.5x1.6 SS	3	3		3	
4	502543	. . NUT HEX M8-1.25 Z050	6	6		6	
5	500897	. . WASHER FL .437x1.000x.083 N500	8	8		8	
6	5001758	. . NUT HEX STO M10-1.5 N500	4	4		4	
9	051830	. PULLEY / W/10RIB X 6.10" DIA To 5-8412	1	1		1	
9	052587	. PULLEY / W/10RIB X 6.10" DIA From 5-8413	1	1		1	
10	052437	. PLATE TRANSITION / FAN CLUTCH & SUPPORT	1	1		1	
11	5001208	. SCREW CRG M8-1.25x30 G8.8 Z050	4	4		4	
12	500874	. WASHER FL 8.4x17.0x1.6 Z050	8	8		8	
13	502889	. WASHER LO SPT 8.1x12.7x2.0 N500	10	10		10	
14	502543	. NUT HEX M8-1.25 Z050	4	4		4	
15	051830	. PULLEY / W/10RIB X 6.10" DIA To 5-8412	1	1		1	
15	052587	. PULLEY / W/10RIB X 6.10" DIA From 5-8413	1	1		1	
16	502528	. SCREW CAP HEX M8-1.25x20 G8.8 EMN	6	6		6	
17	506684	. MULTI V-BELT / 10 RIB 55" 550K10	1	1		1	
18	500171	. SCREW CAP HEX 1/4-20x1 G5 N500	3	3		3	
19	955920	. WASHER LO SPT 6.5x11.5x1.6 ZP	3	3		3	
20	550690	. CONE BUSHING 1 1/4 I.D X 1 13/16 O.D. X 2 5 To 5-8412	1	1		1	
20	550879	. CONE BUSHING 1 1/4 I.D X 1 13/16 O.D. X 2 5 From 5-8413	1	1		1	
21	050907	. COUPLING FAN / TO FIX PULLEY To 5-8412	1	1		1	
21	052593	. COUPLING FAN / TO FIX PULLEY From 5-8413	1	1		1	
22	500218	. WASHER LO SPT .380x.683x.098 DP320	6	6		6	
23	502906	. SCREW CAP HEX 3/8-24x1 1/4 G5 N500	6	6		6	
24	550186	. KEY 1/4" X 1/4" X 1 1/4"	2	2		2	
25	**Y2-0525-00**	**. GEARBOX "SUPERIOR" - #550789, 550810 & 550897**					
26	052500	. PULLEY (3V X 6.92 DIA) To 5-8412	1	1		1	
26	052585	. PULLEY (3V X 6.92 DIA) From 5-8413	1	1		1	
27	550691	. CONE BUSHING 1 1/4 I.D X 3 O.D. X 4 5/8 O.D To 5-8412	1	1		1	
27	550878	. CONE BUSHING 1 1/4 I.D X 3 O.D. X 4 5/8 O.D From 5-8413	1	1		1	
30	052277	. PULLEY ASSY W/BEARING & SEAL / 45MM x 78MM	1	1		1	
30	052676	. PULLEY ASSY W/BEARING & SEAL / 54MM x 75MM	1	1		1	A
30	052499	. . PULLEY / 45MM x 78MM O.D. To 5-8412	1	1		1	
30	052595	. . PULLEY / 45MM x 78MM O.D. From 5-8413	1	1		1	
30	052677	. . PULLEY / 54MM WIDE x 75MM O.D.	1	1		1	A
31	507340	. . BALL BEARING 20 ID x 52 OD x 22.2 W	1	1		1	
31	510618	. . BALL BEARING DBL ROW / 30MM x 62MM x 27 W	1	1		1	A
32	504095	. . RING RETAINER / INT 2.00 x 2.12 x .062	1	1		1	
32	504040	. . RING RETAINER / INT 2.440 x 1.860 x 0.078 STL BLK	1	1		1	A
33	052205	. . SPACER 20MM I.D. X 12.5MM TH	2	2		2	

From 4-8165 To 6-8814		Date:07/2024	PAGE:Y2-0520-01

FAN DRIVE - INSTALLATION - SHORT

Item#	Part	Description	XLII 45	XLII MTH40	XLII MTH45	XLII MTH45E	NOTES
33	052627	. . BUSHING TRANSFER FAN	2	2		2	A
34	507361	. . SEAL	1	1		1	
34	507371	. . SEAL	1	1		1	A
35	507360	. . SEAL	1	1		1	
35	507371	. . SEAL	1	1		1	A
NS	680500	. . GREASE MERITOR / 400GR	AR	AR		AR	
NS	680752	. . GREASE LITHIUM / BLUE	AR	AR		AR	A
36	950208	. BELLOW ASSY / BELT TENSIONER / 3" O.D. To 5-8392	1	1		1	
. NS	504695	. . HOSE CLAMP STEPLESS SPRING SS / OETIKER / 2.9-3.3 To 5-8392	1	1		1	
36	550840	. BELLOW ASSY / BELT TENSIONER / 4" O.D. From 5-8393	1	1		1	
37	051991	. ARM, BELT TENSIONER / IRON USE W 45MM WIDE PULLEY	1	1		1	D
37	052624	. ARM, BELT TENSIONER / IRON USE W 54MM WIDE PULLEY	1	1		1	A
38	3852162	. WASHER FL .312x.734x.065 ZG603 To 5-8392	1	1		1	
38	500444	. WASHER FL .406x.812x.065 Z050 From 5-8393	1	1		1	
39	500942	. WASHER LO SPT 8.1x14.8x2.0 N500 To 5-8392	1	1		1	
39	500478	. WASHER LO SPT .380x.683x.094 Z050 From 5-8393	1	1		1	
40	500836	. SCREW CAP HEX 5/16-18x3/4 G5 N500 To 5-8392	1	1		1	
40	500191	. SCREW CAP HEX 3/8-16x1 G5 Z050 From 5-8393	1	1		1	
41	500735	. NUT HEX STO 3/4-16 ZP	1	1		1	
41	5001252	. NUT HEX STO M20-2.5 DP	1	1		1	A
NS	502558	. WASHER FL 21.0x37.0x3.0 G500	1	1		1	
42	500145	. SCREW CAP HEX 3/4-16x3 1/2 G5 Z050	1	1		1	
42	983296	. SCREW CAP HEX M20-2.5x90 G10.9 ZP	1	1		1	A
43	500811	. NUT HEX STO M12-1.75 G500	1	1		1	
43	5001628	. NUT HEX NYRT M10-1.5 SS	1	1		1	S
44	500446	. WASHER FL .531x1.250x.125 Z050	1	1		1	
44	500270	. WASHER FL .406x1.000x.063 SS	1	1		1	S
45	507293	. BUSHING NYLINED .625x.750x.750	2	2		2	
46	052485	. PIVOT / TO FIX TENSIONER TO SUPPORT	1	1		1	
46	052670	. PIVOT / TO FIX TENSIONER TO SUPPORT	1	1		1	S
NS	501497	. GREASE FITTING / 1/4-28	1	1		1	
47	500449	. WASHER FL .625x1.500 SS	AR	AR		AR	
48	052433	. SUPPORT FAN CLUTCH & GEAR BOX / SHORT To 5-8392	1	1		1	
48	052588	. SUPPORT FAN CLUTCH & GEAR BOX / SHORT From 5-8393	1	1		1	
49	500802	. WASHER LO SPT 16.2x37.4x3.5 Z050	1	1		1	
50	502588	. NUT HEX M16-2.0 ZP	1	1		1	
51	052558	. BELLOW TENSIONER / W/3" BELLOW To 5-8392	1				
51	052606	. BELLOW TENSIONER / W/4" BELLOW From 5-8393 To 5-8622	1				B
. NS	WB04-05C	. . SEE WARRANTY BULLETIN From 5-8393 To 5-8622	1				B
51	052644	. BELLOW TENSIONER / W/4" BELLOW From 5-8623	1				S
51	052556	. BELLOW TENSIONER / W/3" BELLOW To 5-8392		1		1	
51	052606	. BELLOW TENSIONER / W/4" BELLOW From 5-8393 To 5-8622		1		1	B

From 4-8165 To 6-8814		Date:07/2024	PAGE:Y2-0520-01

FAN DRIVE - INSTALLATION - SHORT

Item#	Part	Description	XLII 45	XLII MTH40	XLII MTH45	XLII MTH45E	NOTES
. NS	WB04-05C	. . SEE WARRANTY BULLETIN From 5-8393 To 5-8622		1		1	B
51	052645	. BELLOW TENSIONER / W/4" BELLOW From 5-8623		1		1	S
53	971072	. NUT HEX M12-1.75 ZG603	2	2		2	
54	500944	. WASHER LO SPT .506x.873x.125 N500	6	6		6	
55	500214	. SCREW CAP HEX 1/2-13x1 1/4 G5 Z050	4	4		4	
56	500735	. NUT HEX STO 3/4-16 ZP	2	2		2	
57	500451	. WASHER FL .812x2.000x.148 ZP	2	2		2	
58	630002	. BUSHING / RUBBER / (TWO PIECES) 1" x 1.005" I.D.	4	4		4	
NS	507347	. SPACER / BUSHING	2	2		2	
59	500145	. SCREW CAP HEX 3/4-16x3 1/2 G5 Z050	2	2		2	
60	052494	. SUPPORT, ANGLE	2				
60	052555	. SUPPORT, ANGLE		2		2	
62	502901	. WASHER FL .625x1.469x.109 N500	1	1		1	
63	502915	. NUT HEX 5/8-11 N500 To 5-8392	1	1		1	
63	502917	. NUT HEX JAM 3/4-16 G2 N500 From 5-8393	1	1		1	
64	501036	. MALE ELBOW 90º / SAE 45º FITTING / #4FL-Mx1/8NPT-M BR	1	1		1	
65	052206	. SPRING ATTACHMENT W/45MM WIDE PULLEY	1	1		1	
66	502247	. SPRING COMPRESSION / 1.250 O.D. x 2.5 x .125	1	1		1	
70	550832	FAN ASSY / CW 34" / 9 BLADES PLASTIC	1	1		1	
71	**Y2-0120-00**	**DRIVE PULLEY & BELTS - BUS & MTH**					
71	**Y2-0120-50**	**DRIVE PULLEY & BELTS - MTH**					
72	052310	ATTACHMENT PLATE ASSY / TO FIX ANGLE TO FLOOR	2	2		2	
74	971072	NUT HEX M12-1.75 ZG603	4	4		4	
NS	5001568	NUT PUSH RND M12 ZP	4	4		4	
75	052535	HOSE ASSY TEFLON #4 662MM To 5-8392	1	1		1	
75	052590	HOSE ASSY TEFLON #4 830MM From 5-8393	1	1		1	
80	500606	SCREW MA TR PH #10-24x3/4 SS	1	1		1	
81	500914	WASHER LO SPT .193x.334x.047 N500	2	2		2	
82	952624	CLAMP / 1/4" I.D.	1	1		1	
83	502882	NUT HEX #10-24 N500	1	1		1	
90	052491	SUPPORT BELLOW TENSIONER / W/3" BELLOW To 5-8392	1				
90	052589	SUPPORT BELLOW TENSIONER / W/4" BELLOW From 5-8393 To 5-8622	1				
. NS	WB04-05C	. SEE WARRANTY BULLETIN From 5-8393 To 5-8622	1				
90	052641	SUPPORT BELLOW TENSIONER / W/4" BELLOW From 5-8623	1				
. NS	WB04-05C	. SEE WARRANTY BULLETIN From 5-8623	1				
90	052708	SUPPORT BELLOW TENTIONER / W/4" BELLOW	1				S
90	052491	SUPPORT BELLOW TENSIONER / W/3" BELLOW To 5-8392		1		1	
90	052607	SUPPORT BELLOW TENSIONER / W/4" BELLOW From 5-8393 To 5-8622		1		1	
. NS	WB04-05C	. SEE WARRANTY BULLETIN From 5-8393 To 5-8622		1		1	
90	052646	SUPPORT BELLOW TENSIONER / W/4" BELLOW From 5-8623		1		1	
90	052706	SUPPORT BELLOW TENTIONER / W/4" BELLOW		1		1	S
91	**Y2-0125-01**	**BELTS TENSIONERS - WITH DETROIT S-60**					

From 4-8165 To 6-8814		Date:07/2024	PAGE:Y2-0520-01

FAN DRIVE - INSTALLATION - SHORT

Item#	Part	Description	XLII 45	XLII MTH40	XLII MTH45	XLII MTH45E	NOTES
		A) THIS PART ARE INCLUDE WITH NEW ARM ASSY # 052689					
		B) FOR PRODUCT IMPROVEMENT, ASK PART #052644 FOR XL-45 AND PART #052645 FOR XL-40 & MTH-45S. SEE WARRANTY BULLETIN WB05-03					
		D) THIS ARM IS SUPERSEEDED BY #052689 "ARM ASSY PULLEY"					
		S) SERVICE					
		3) NOT SOLD ASSEMBLY					

From 6-8815 To 8-9339		Date:07/2024	PAGE:Y2-0520-02
FAN DRIVE - INSTALLATION - SHORT			

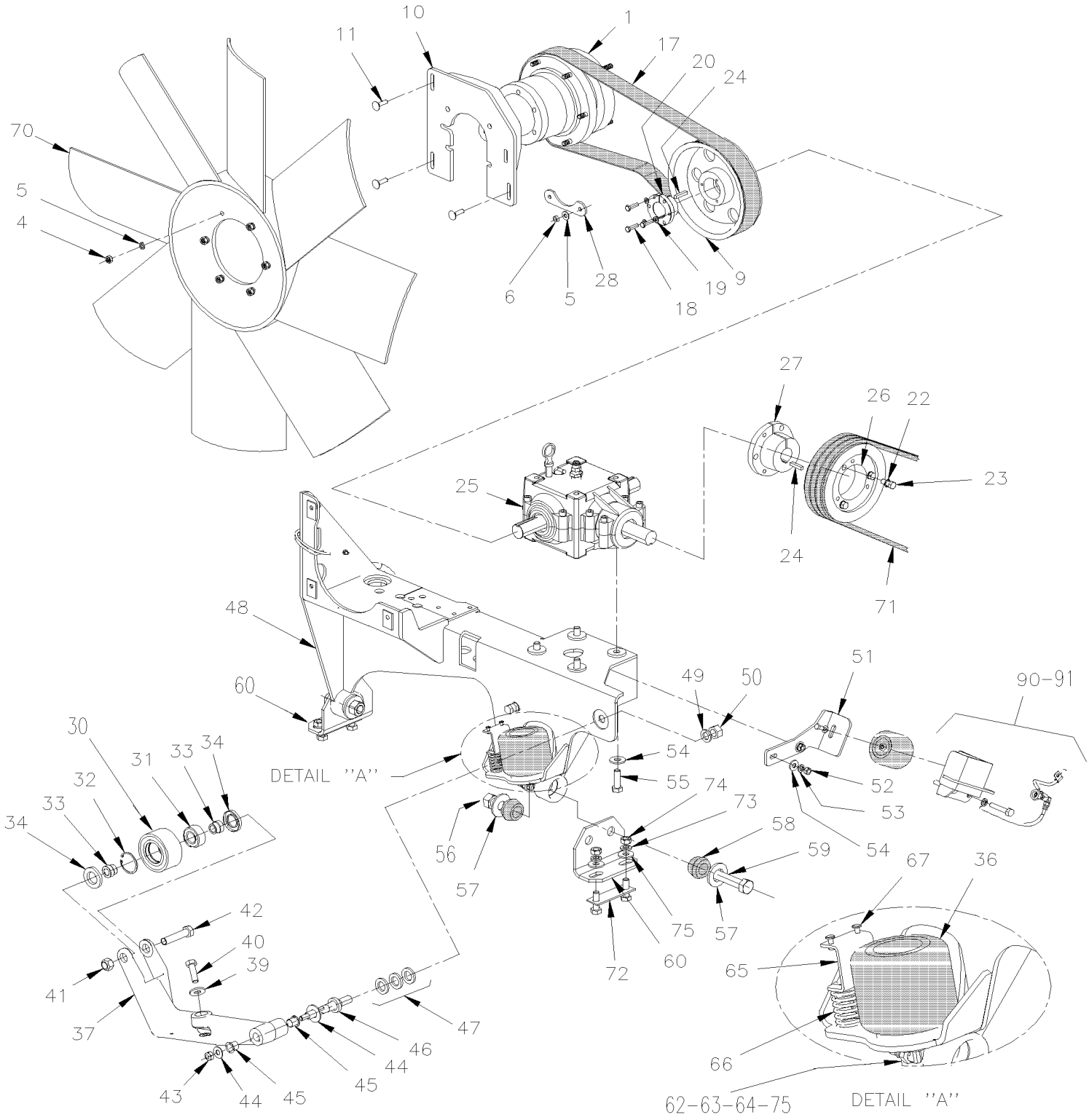

From 6-8815 To 8-9339		Date:07/2024	PAGE:Y2-0520-02

FAN DRIVE - INSTALLATION - SHORT

Item#	Part	Description	XLII 45	XLII MTH40	XLII MTH45	XLII MTH45E	NOTES
1	**Y2-0540-52**	**FAN CLUTCH ASSY - #550839 - MTH 45'**					
4	502543	. NUT HEX M8-1.25 Z050	6	6		6	
5	502644	. WASHER FL 10.5x30.0x2.5 Z050	8	8		8	
6	5001758	. NUT HEX STO M10-1.5 N500	4	4		4	
9	052584	PULLEY / W/12RIB X 8.582" DIA	1	1		1	
10	052596	PLATE TRANSITION / FAN CLUTCH & SUPPORT	1	1		1	
11	502891	SCREW CRG M8-1.25x40 G8.8 Z050	4	4		4	
12	500874	WASHER FL 8.4x17.0x1.6 Z050	3	3		3	
13	502889	WASHER LO SPT 8.1x12.7x2.0 N500	3	3		3	
13	955920	WASHER LO SPT 6.5x11.5x1.6 ZP	3	3		3	
14	502543	NUT HEX M8-1.25 Z050	3	3		3	
17	5060073	MULTI V-BELT / 12 RIB 61.41" (1560MM) VBR614K12	1	1		1	
17	5002112	MULTI V-BELT / 12 RIB 62.40" (1585MM)	1	1		1	A
18	500171	SCREW CAP HEX 1/4-20x1 G5 N500	3	3		3	
19	955920	WASHER LO SPT 6.5x11.5x1.6 ZP	3	3		3	
20	550879	CONE BUSHING 1 1/4 I.D X 1 13/16 O.D. X 2 5	1	1		1	
22	500546	WASHER LO EXT .384x.694x.040 Z050	6	6		6	
23	502906	SCREW CAP HEX 3/8-24x1 1/4 G5 N500	6	6		6	
24	550186	KEY 1/4" X 1/4" X 1 1/4"	2	2		2	
25	**Y2-0525-00**	**GEARBOX "SUPERIOR" - #550789, 550810 & 550897**					
26	052585	PULLEY (3V X 6.92 DIA)	1	1		1	
27	550878	CONE BUSHING 1 1/4 I.D X 3 O.D. X 4 5/8 O.D	1	1		1	
28	052492	PLATE	1	1		1	
30	052673	PULLEY ASSY W/BEARING & SEAL / 54MM x 117MM	1	1		1	
30	052896	. PULLEY ASSY W/BEARING / 54MM x 117MM O.D.	1	1		1	
30	052625	. . PULLEY / 54MM x 117MM O.D.	1	1		1	
31	510618	. . BALL BEARING DBL ROW / 30MM x 62MM x 27 W	1	1		1	
32	504040	. . RING RETAINER / INT 2.440 x 1.860 x 0.078 STL BLK	1	1		1	
33	052627	. BUSHING TRANSFER FAN	2	2		2	
34	507371	. SEAL	2	2		2	
NS	680752	. GREASE LITHIUM / BLUE	AR	AR		AR	
36	550840	BELLOW ASSY / BELT TENSIONER / 4" O.D.	1	1		1	
37	052624	ARM, BELT TENSIONER / IRON USE W 54MM WIDE PULLEY	1	1		1	
39	500218	WASHER LO SPT .380x.683x.098 DP320	1	1		1	
NS	500832	WASHER FL .406x.812x.065 N500	1	1		1	
40	502926	SCREW CAP HEX 3/8-16x7/8 G5 N500	1	1		1	
41	5001252	NUT HEX STO M20-2.5 DP	1	1		1	
NS	502558	WASHER FL 21.0x37.0x3.0 G500	1	1		1	
42	983296	SCREW CAP HEX M20-2.5x90 G10.9 ZP	1	1		1	
43	502617	NUT HEX NYRT M10-1.5 Z050	1	1		1	
44	500270	WASHER FL .406x1.000x.063 SS	1	1		1	
45	507293	BUSHING NYLINED .625x.750x.750	2	2		2	

From 6-8815 To 8-9339		Date:07/2024	PAGE:Y2-0520-02

FAN DRIVE - INSTALLATION - SHORT

Item#	Part	Description	XLII 45	XLII MTH40	XLII MTH45	XLII MTH45E	NOTES
46	052670	PIVOT / TO FIX TENSIONER TO SUPPORT	1	1		1	
NS	501497	GREASE FITTING / 1/4-28	1	1		1	
47	500449	WASHER FL .625x1.500 SS	AR	AR		AR	
48	052571	SUPPORT FAN CLUTCH & GEAR BOX / SHORT	1	1		1	
49	500802	WASHER LO SPT 16.2x37.4x3.5 Z050	1	1		1	
50	502588	NUT HEX M16-2.0 ZP	1	1		1	
51	052644	BELLOW TENSIONER / W/4" BELLOW	1				
51	052645	BELLOW TENSIONER / W/4" BELLOW		1		1	
52	502875	SCREW CAP HEX M12-1.75x40 G8.8 N50	2	2		2	
53	500811	NUT HEX STO M12-1.75 G500	2	2		2	
54	500944	WASHER LO SPT .506x.873x.125 N500	6	6		6	
NS	500211	WASHER FL .531x1.250x.125 N500	2	2		2	
55	500214	SCREW CAP HEX 1/2-13x1 1/4 G5 Z050	4	4		4	
56	500735	NUT HEX STO 3/4-16 ZP	2	2		2	
57	500451	WASHER FL .812x2.000x.148 ZP	2	2		2	
58	630002	BUSHING / RUBBER / (TWO PIECES) 1" x 1.005" I.D.	2	2		2	
NS	507347	SPACER / BUSHING	2	2		2	
59	500145	SCREW CAP HEX 3/4-16x3 1/2 G5 Z050	2	2		2	
60	052494	SUPPORT, ANGLE	2				
60	052555	SUPPORT, ANGLE		2		2	
62	502901	WASHER FL .625x1.469x.109 N500	1	1		1	
63	502917	NUT HEX JAM 3/4-16 G2 N500	1	1		1	
64	501036	MALE ELBOW 90º / SAE 45º FITTING / #4FL-Mx1/8NPT-M BR	1	1		1	
65	052688	SPRING ATTACHMENT W/54MM WIDE PULLEY	1	1		1	
66	502247	SPRING COMPRESSION / 1.250 O.D. x 2.5 x .125	1	1		1	
67	504487	RIVET MGLP PRDG 3/16x7/16 SS	2	2		2	
70	550832	FAN ASSY / CW 34" / 9 BLADES PLASTIC	1	1		1	
71	**Y2-0120-00**	**DRIVE PULLEY & BELTS - BUS & MTH**					
71	**Y2-0120-50**	**DRIVE PULLEY & BELTS - MTH**					
72	052310	ATTACHMENT PLATE ASSY / TO FIX ANGLE TO FLOOR	2	2		2	
73	5001568	NUT PUSH RND M12 ZP	4	4		4	
74	971072	NUT HEX M12-1.75 ZG603	4	4		4	
75	052590	HOSE ASSY TEFLON #4 830MM	1	1		1	
NS	500606	SCREW MA TR PH #10-24x3/4 SS	1	1		1	
NS	500914	WASHER LO SPT .193x.334x.047 N500	2	2		2	
NS	952624	CLAMP / 1/4" I.D.	1	1		1	
NS	502882	NUT HEX #10-24 N500	1	1		1	
90	052641	SUPPORT BELLOW TENSIONER / W/4" BELLOW To 6-8878	1				
. NS	WB04-05C	. SEE WARRANTY BULLETIN To 6-8878	1				
90	052708	SUPPORT BELLOW TENTIONER / W/4" BELLOW From 6-8879	1				S
90	052646	SUPPORT BELLOW TENSIONER / W/4" BELLOW To 6-8878		1		1	
90	052706	SUPPORT BELLOW TENTIONER / W/4" BELLOW From 6-8879		1		1	S

From 6-8815 To 8-9339		Date:07/2024	PAGE:Y2-0520-02

FAN DRIVE - INSTALLATION - SHORT

Item#	Part	Description	XLII 45	XLII MTH40	XLII MTH45	XLII MTH45E	NOTES
91	Y2-0125-01	BELTS TENSIONERS - WITH DETROIT S-60					
		A) USE WITH FAN CLUTCH 550057					
		S) SERVICE					

From 4-8165 To 6-8814		Date:07/2024	PAGE:Y2-0520-50

FAN DRIVE - INSTALLATION - LONG

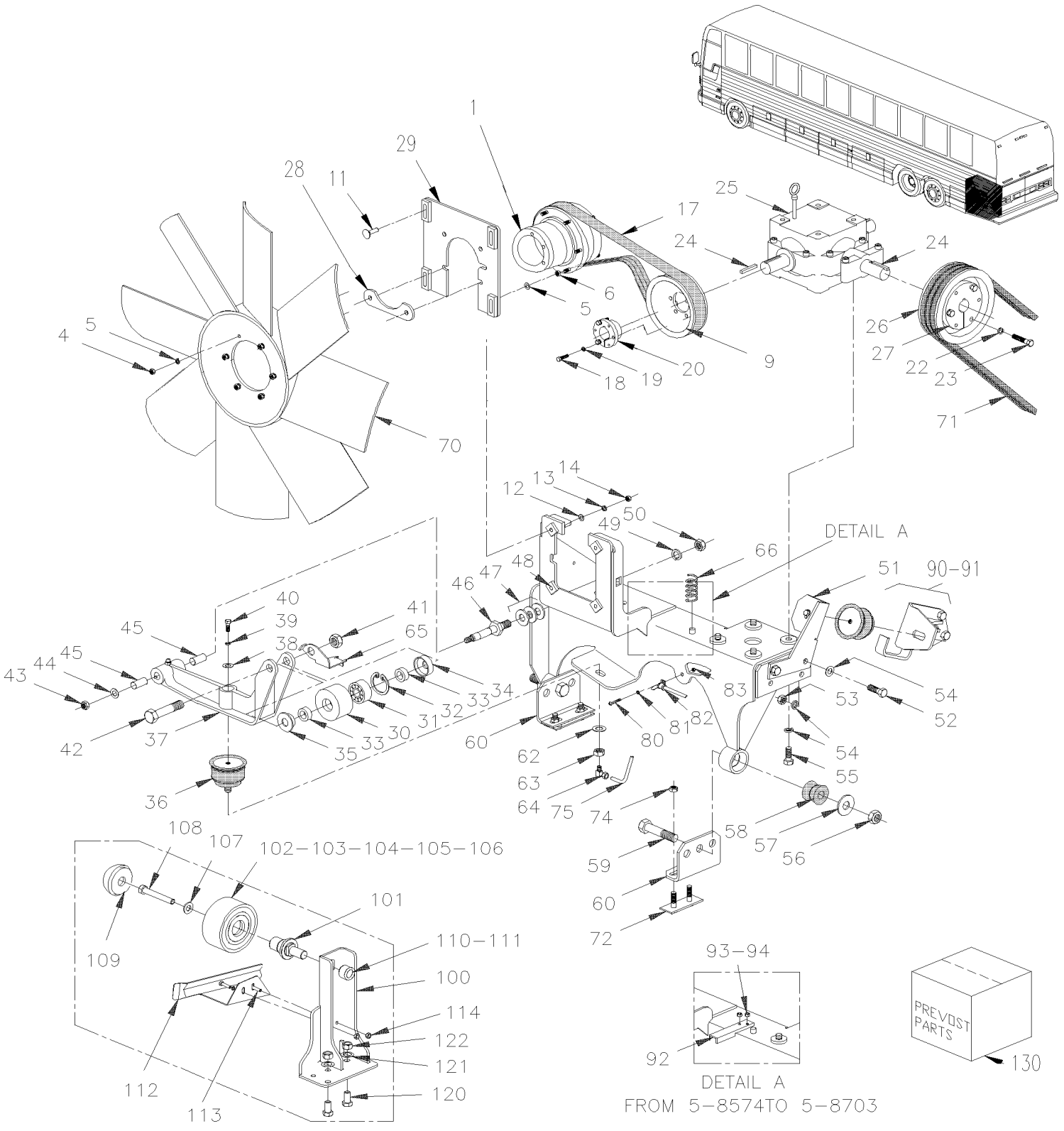

From 4-8165 To 6-8814		Date:07/2024	PAGE:Y2-0520-50
FAN DRIVE - INSTALLATION - LONG			

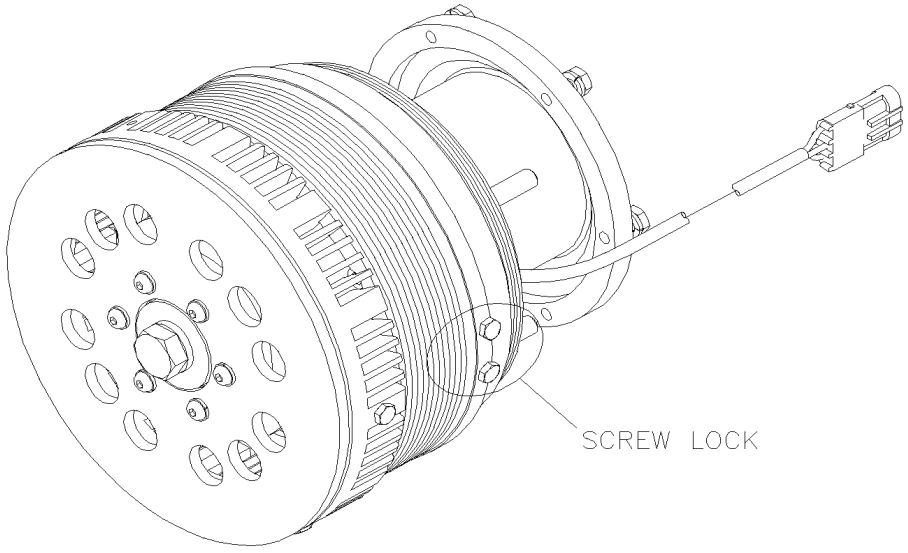

From 4-8165 To 6-8814		Date:07/2024	PAGE:Y2-0520-50

FAN DRIVE - INSTALLATION - LONG

Item#	Part	Description	XLII 45	XLII MTH40	XLII MTH45	XLII MTH45E	NOTES
	N.S.A.	FAN DRIVE ASSY			1		3
1	**Y2-0540-52**	**. FAN CLUTCH ASSY - #550839 - MTH 45'**					
4	502543	. . NUT HEX M8-1.25 Z050			6		
5	500897	. . WASHER FL .437x1.000x.083 N500			8		
6	5001758	. . NUT HEX STO M10-1.5 N500			4		
9	059057	. PULLEY / W/12RIB X 8.582" DIA To 5-8412			1		
9	052584	. PULLEY / W/12RIB X 8.582" DIA From 5-8413			1		
11	502891	. SCREW CRG M8-1.25x40 G8.8 Z050			4		
12	500874	. WASHER FL 8.4x17.0x1.6 Z050			8		
13	5001003	. WASHER LO SPT 8.1x12.7x2.0 Z050			10		
14	502543	. NUT HEX M8-1.25 Z050			4		
15	500897	. WASHER FL .437x1.000x.083 N500			4		
16	500680	. NUT HEX STO M10-1.5 Z050			4		
17	507627	. MULTI V-BELT / 12 RIB 82 41/64" (2100) 827K12BU			1		C J
17	506064	. MULTI V-BELT / 12 RIB 83 1/2" (2121)			1		E
18	500171	. SCREW CAP HEX 1/4-20x1 G5 N500			3		
19	955920	. WASHER LO SPT 6.5x11.5x1.6 ZP			3		
20	550690	. CONE BUSHING 1 1/4 I.D X 1 13/16 O.D. X 2 5 To 5-8412			1		
20	550879	. CONE BUSHING 1 1/4 I.D X 1 13/16 O.D. X 2 5 From 5-8413			1		
22	500218	. WASHER LO SPT .380x.683x.098 DP320			6		
23	502906	. SCREW CAP HEX 3/8-24x1 1/4 G5 N500			6		
24	550186	. KEY 1/4" X 1/4" X 1 1/4"			2		
25	**Y2-0525-00**	**GEARBOX "SUPERIOR" - #550789, 550810 & 550897**					
26	059059	. PULLEY (3V X 7.40 DIA) To 5-8412			1		
26	052586	. PULLEY (3V X 7.40 DIA) From 5-8413			1		
27	550691	. CONE BUSHING 1 1/4 I.D X 3 O.D. X 4 5/8 O.D To 5-8412			1		
27	550878	. CONE BUSHING 1 1/4 I.D X 3 O.D. X 4 5/8 O.D From 5-8413			1		
28	052492	. PLATE			1		
29	052476	. PLATE TRANSITION / FAN CLUTCH & SUPPORT			1		
30	052277	. PULLEY ASSY W/BEARING & SEAL / 45MM x 78MM To 6-8809			1		
30	052676	. PULLEY ASSY W/BEARING & SEAL / 54MM x 75MM			1		B
30	052499	. . PULLEY / 45MM x 78MM O.D. To 5-8412			1		
30	052595	. . PULLEY / 45MM x 78MM O.D. From 5-8413 To 6-8809			1		
30	052677	. . PULLEY / 54MM WIDE x 75MM O.D.			1		B
31	507340	. . BALL BEARING 20 ID x 52 OD x 22.2 W To 6-8809			1		
31	510618	. . BALL BEARING DBL ROW / 30MM x 62MM x 27 W From 6-8810			1		B
32	504095	. . RING RETAINER / INT 2.00 x 2.12 x .062 To 6-8809			1		
32	504040	. . RING RETAINER / INT 2.440 x 1.860 x 0.078 STL BLK From 6-8810			1		B
33	052205	. . SPACER 20MM I.D. X 12.5MM TH To 6-8809			2		
33	052627	. . BUSHING TRANSFER FAN From 6-8810			2		B
34	507361	. . SEAL To 6-8809			1		
34	507371	. . SEAL From 6-8810			1		B

From 4-8165 To 6-8814		Date:07/2024	PAGE:Y2-0520-50

FAN DRIVE - INSTALLATION - LONG

Item#	Part	Description	XLII 45	XLII MTH40	XLII MTH45	XLII MTH45E	NOTES
35	507360	. . SEAL To 6-8809			1		
35	507371	. . SEAL From 6-8810			1		B
NS	680500	. . GREASE MERITOR / 400GR To 6-8809			AR		
NS	680752	. . GREASE LITHIUM / BLUE From 6-8810			AR		B
36	550840	. BELLOW ASSY / BELT TENSIONER / 4" O.D.			1		
37	051991	. ARM, BELT TENSIONER / IRON USE W 45MM WIDE PULLEY To 6-8809			1		D
37	052624	. ARM, BELT TENSIONER / IRON USE W 54MM WIDE PULLEY From 6-8810			1		B
38	500444	. WASHER FL .406x.812x.065 Z050			1		
39	500478	. WASHER LO SPT .380x.683x.094 Z050			1		
40	500191	. SCREW CAP HEX 3/8-16x1 G5 Z050			1		
41	500735	. NUT HEX STO 3/4-16 ZP To 6-8809			1		
41	5001252	. NUT HEX STO M20-2.5 DP From 6-8810			1		B
NS	502558	. WASHER FL 21.0x37.0x3.0 G500			1		
42	500145	. SCREW CAP HEX 3/4-16x3 1/2 G5 Z050 To 6-8809			1		
42	983296	. SCREW CAP HEX M20-2.5x90 G10.9 ZP			1		B S
43	500811	. NUT HEX STO M12-1.75 G500 To 5-8692			1		
43	5001628	. NUT HEX NYRT M10-1.5 SS From 5-8693			1		S
44	500446	. WASHER FL .531x1.250x.125 Z050 To 5-8692			1		
44	500270	. WASHER FL .406x1.000x.063 SS From 5-8693			1		S
45	507293	. BUSHING NYLINED .625x.750x.750			2		
46	052485	. PIVOT / TO FIX TENSIONER TO SUPPORT To 5-8692			1		
46	052670	. PIVOT / TO FIX TENSIONER TO SUPPORT From 5-8693			1		S
NS	501497	. GREASE FITTING / 1/4-28			1		
47	500449	. WASHER FL .625x1.500 SS			AR		
48	052539	. SUPPORT FAN CLUTCH & GEAR BOX / LONG To 4-8325			1		
48	052578	. SUPPORT FAN CLUTCH & GEAR BOX / LONG From 4-8326			1		
49	500802	. WASHER LO SPT 16.2x37.4x3.5 Z050			1		
50	502588	. NUT HEX M16-2.0 ZP			1		
51	052427	. BELLOW TENSIONER To 5-8440			1		F
. NS	WB04-05C	. . SEE WARRANTY BULLETIN To 5-8440			1		F
51	052621	. BELLOW TENSIONER From 5-8441			1		S
52	502875	. SCREW CAP HEX M12-1.75x40 G8.8 N50			2		
53	971072	. NUT HEX M12-1.75 ZG603			2		
54	500944	. WASHER LO SPT .506x.873x.125 N500			6		
NS	500211	. WASHER FL .531x1.250x.125 N500			2		
55	500214	. SCREW CAP HEX 1/2-13x1 1/4 G5 Z050			4		
56	500735	. NUT HEX STO 3/4-16 ZP			2		
57	500451	. WASHER FL .812x2.000x.148 ZP			2		
58	630002	. BUSHING / RUBBER / (TWO PIECES) 1" x 1.005" I.D.			2		
NS	507347	. SPACER / BUSHING			2		
59	500145	. SCREW CAP HEX 3/4-16x3 1/2 G5 Z050			2		
60	052429	. SUPPORT, ANGLE			2		

From 4-8165 To 6-8814		Date:07/2024	PAGE:Y2-0520-50

FAN DRIVE - INSTALLATION - LONG

Item#	Part	Description	XLII 45	XLII MTH40	XLII MTH45	XLII MTH45E	NOTES
62	502901	. WASHER FL .625x1.469x.109 N500			1		
63	502917	. NUT HEX JAM 3/4-16 G2 N500			1		
64	501036	. MALE ELBOW 90º / SAE 45º FITTING / #4FL-Mx1/8NPT-M BR			1		
65	052477	. SPRING ATTACHMENT From 4-8465 To 6-8814			1		
65	052688	. SPRING ATTACHMENT W/54MM WIDE PULLEY From 6-8815			1		
NS	504487	. RIVET MGLP PRDG 3/16x7/16 SS From 6-8815			1		H
NS	502903	. SCREW TC FL PH #10-24x1 1/4 N500			1		G
66	502247	. SPRING COMPRESSION / 1.250 O.D. x 2.5 x .125			1		
70	550838	FAN ASSY / CW 36" / 9 BLADES PLASTIC			1		
71	**Y2-0120-50**	**DRIVE PULLEY & BELTS - MTH**					
72	052310	ATTACHMENT PLATE ASSY / TO FIX ANGLE TO FLOOR			2		
NS	050706	SPACER 3/8" TH			AR		
NS	050705	SPACER 1/4" TH			AR		
74	971072	NUT HEX M12-1.75 ZG603			4		
NS	5001568	NUT PUSH RND M12 ZP			4		
75	031054	HOSE ASSY TEFLON #4 770MM To 6-8809			1		
75	052361	HOSE ASSY TEFLON #4 950MM From 6-8810			1		
80	500606	SCREW MA TR PH #10-24x3/4 SS			1		
81	500914	WASHER LO SPT .193x.334x.047 N500			2		
82	952624	CLAMP / 1/4" I.D.			1		
83	502882	NUT HEX #10-24 N500			1		
90	052488	SUPPORT BELLOW TENTIONER To 5-8440			1		
. NS	WB04-05C	. SEE WARRANTY BULLETIN To 5-8440			1		
90	052240	SUPPORT BELLOW TENTIONER From 5-8441 To 5-8489			1		
. NS	WB04-05C	. SEE WARRANTY BULLETIN From 5-8441 To 5-8489			1		
90	053441	SUPPORT BELLOW TENTIONER From 5-8490			1		
. NS	WB04-05C	. SEE WARRANTY BULLETIN From 5-8490			1		
90	052707	SUPPORT BELLOW TENTIONER			1		S
91	**Y2-0125-01**	**BELTS TENSIONERS - WITH DETROIT S-60**					
92	052631	STOPPER TENSIONER ARM / "U" SHAPE 40MM X 1 From 5-8574 To 5-8692			1		A
93	5001338	SCREW CAP HEX M12-1.75x45 G10.9 N500 From 5-8574 To 5-8692			2		A
94	500811	NUT HEX STO M12-1.75 G500 From 5-8574 To 5-8692			2		A
100	052661	SUPPORT UPPER PULLEY TENSIONER From 5-8693			1		
101	052626	SHAFT UPPER PULLEY TENSIONER From 5-8693			1		
102	052672	PULLEY ASSY W/BEARING & SHAFT / 54MM x 117MM From 5-8693			1		
103	052896	. PULLEY ASSY W/BEARING / 54MM x 117MM O.D. From 5-8693			1		
103	052625	. . PULLEY / 54MM x 117MM O.D. From 5-8693			1		
104	507371	. SEAL From 5-8693			1		
105	504040	. RING RETAINER / INT 2.440 x 1.860 x 0.078 STL BLK From 5-8693			1		
106	510618	. BALL BEARING DBL ROW / 30MM x 62MM x 27 W From 5-8693			1		
107	012062	WASHER FL 10.2 x38.1x5 ST From 5-8693			1		
108	500829	SCREW CAP HEX M10-1.5x40 G8.8 From 5-8693			1		

From 4-8165 To 6-8814		Date:07/2024	PAGE:Y2-0520-50

FAN DRIVE - INSTALLATION - LONG

Item#	Part	Description	XLII 45	XLII MTH40	XLII MTH45	XLII MTH45E	NOTES
109	510798	PROTECTOR CAP / "PREVOST" From 5-8693			1		
110	5001252	NUT HEX STO M20-2.5 DP From 5-8693			1		
111	502558	WASHER FL 21.0x37.0x3.0 G500 From 5-8693			1		
112	052666	AIR DEFLECTOR / BELT From 5-8693			1		
113	5001433	SCREW CAP HEX M6-1.0x25 SS From 5-8693			2		
114	5001182	NUT HEX NYRT M6-1.0 SS From 5-8693			2		
120	500806	SCREW CAP HEX M12-1.75X35 G10.9 G500 From 5-8693			1		
120	500065	SCREW CAP HEX M10-1.5x30 G10.9 DP From 5-8693			3		
NS	500270	WASHER FL .406x1.000x.063 SS From 5-8693			3		
121	500958	WASHER FL .531x1.062x.095 SS From 5-8693			1		
121	502616	WASHER LO SPT 10.2x18.1x2.2 SS From 5-8693			1		
122	500811	NUT HEX STO M12-1.75 G500 From 5-8693			1		
130	052675	KIT, RETROFIT UPPER TENSIONER & AIR DEFLEC / W/LONG FAN CLUTCH SUPPORT From 4-8165 To 5-8691			1		
. NS	WB05-05C	. SEE WARRANTY BULLETIN From 4-8165 To 5-8691			1		
. NS	012062	. WASHER FL 10.2 x38.1x5 ST From 4-8165 To 5-8691			1		
. NS	052661	. SUPPORT UPPER PULLEY TENSIONER From 4-8165 To 5-8691			1		
. NS	052666	. AIR DEFLECTOR / BELT From 4-8165 To 5-8691			1		
. NS	5001182	. NUT HEX NYRT M6-1.0 SS From 4-8165 To 5-8691			2		
. NS	052672	. PULLEY ASSY W/BEARING & SHAFT / 54MM x 117MM From 4-8165 To 5-8691			1		
. NS	5001252	. NUT HEX STO M20-2.5 DP From 4-8165 To 5-8691			1		
. NS	5001433	. SCREW CAP HEX M6-1.0x25 SS From 4-8165 To 5-8691			2		
. NS	500270	. WASHER FL .406x1.000x.063 SS From 4-8165 To 5-8691			3		
. NS	500411	. WASHER FL .260x.697x.050 SS From 4-8165 To 5-8691			2		
. NS	500806	. SCREW CAP HEX M12-1.75X35 G10.9 G500 From 4-8165 To 5-8691			1		
. NS	500811	. NUT HEX STO M12-1.75 G500 From 4-8165 To 5-8691			1		
. NS	500829	. SCREW CAP HEX M10-1.5x40 G8.8 From 4-8165 To 5-8691			1		
. NS	500958	. WASHER FL .531x1.062x.095 SS From 4-8165 To 5-8691			1		
. NS	502558	. WASHER FL 21.0x37.0x3.0 G500 From 4-8165 To 5-8691			1		
. NS	502616	. WASHER LO SPT 10.2x18.1x2.2 SS From 4-8165 To 5-8691			3		
. NS	510798	. PROTECTOR CAP / "PREVOST" From 4-8165 To 5-8691			1		
. NS	5001741	. SCREW CAP HEXF M10-1.5x30 G8.8 N500 From 4-8165 To 5-8691			3		
		A) FOR PRODUCT IMPROVEMENT, INSTALL THOSE PARTS UP TO 5-8593					
		B) THIS PART ARE INCLUDE WITH NEW ARM ASSY #052689					
		C) FOR PRODUCT IMPROVEMENT, ASK KIT #052675					
		D) THIS ARM IS SUPERSEEDED BY #052689 "ARM ASSY PULLEY" WHO INCLUDE ALLS PARTS WITH NOTE "B"					
		E) USE WITH CURRENT FAN CLUTCH #550966 WITH TAB LOCK SEE IMAGE					
		F) FOR PRODUCT IMPROVEMENT, ASK PART #052621 AND SEE WARRANTY BULLETIN WB04-05A					
		G) TO FIX SPRING					

From 4-8165 To 6-8814		Date:07/2024	PAGE:Y2-0520-50

FAN DRIVE - INSTALLATION - LONG

Item#	Part	Description	XLII 45	XLII MTH40	XLII MTH45	XLII MTH45E	NOTES
		H) TO FIX SPRING ATTACHMENT TO ARM					
		J) USE WITH FORMER FAN CLUTCH #550966 WITH SCREW LOCK SEE IMAGE					
		S) SERVICE					
		3) NOT SOLD ASSEMBLY					

From 6-8815 To 8-9339		Date:07/2024	PAGE:Y2-0520-51

FAN DRIVE - INSTALLATION - LONG

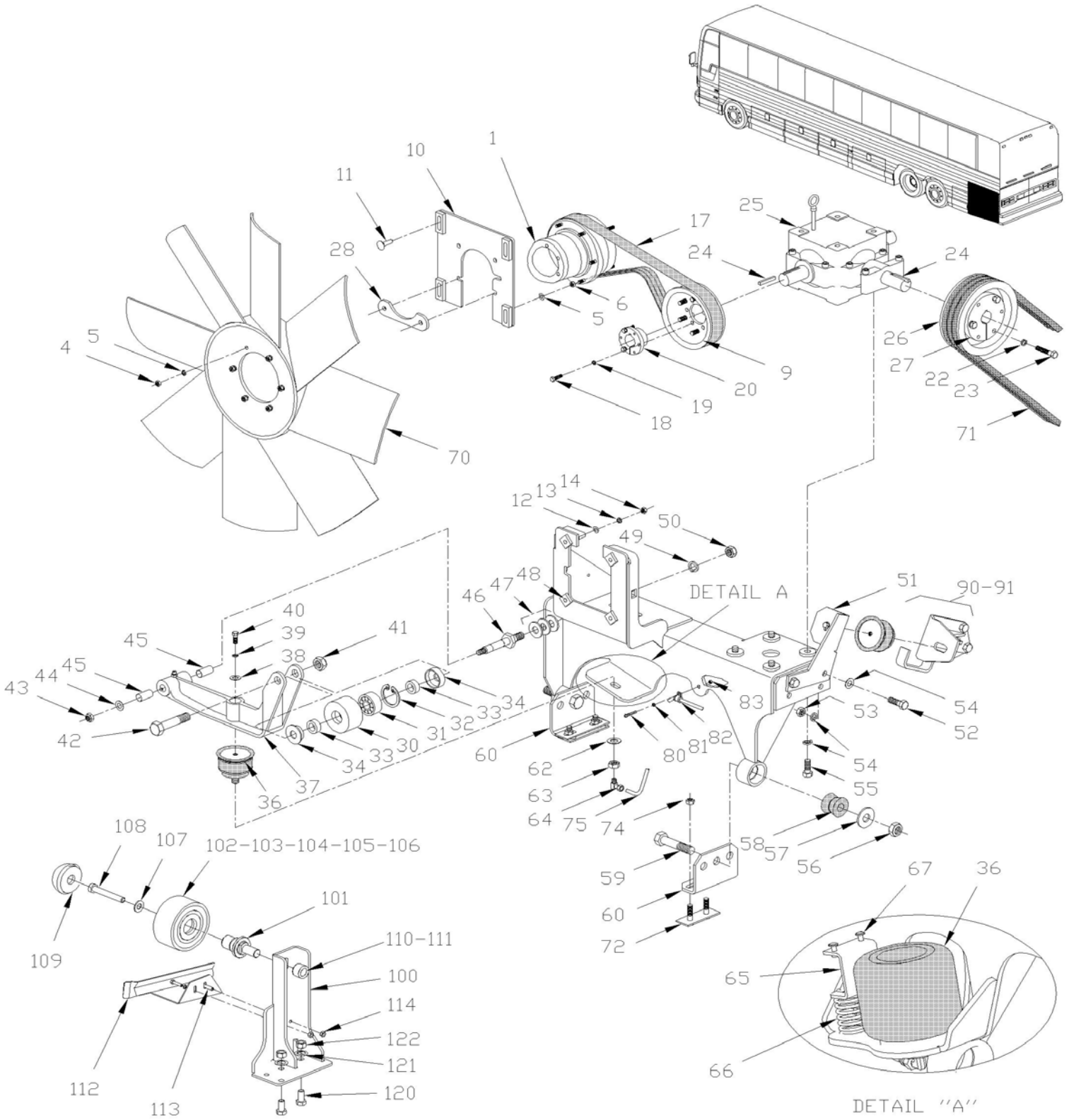

From 6-8815 To 8-9339		Date:07/2024	PAGE:Y2-0520-51
FAN DRIVE - INSTALLATION - LONG			

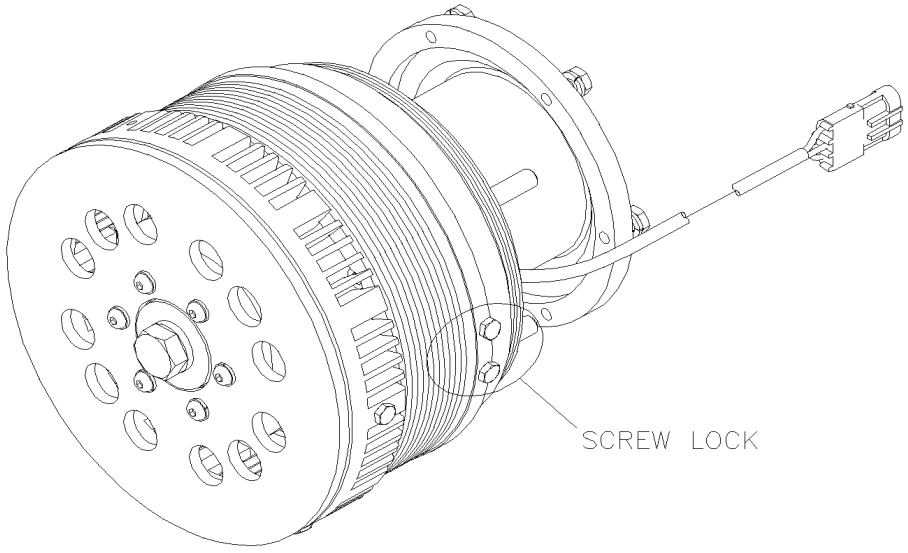

From 6-8815 To 8-9339		Date:07/2024	PAGE:Y2-0520-51

FAN DRIVE - INSTALLATION - LONG

Item#	Part	Description	XLII 45	XLII MTH40	XLII MTH45	XLII MTH45E	NOTES
	Call order desk	FAN DRIVE ASSY			1		P
1	**Y2-0540-52**	**FAN CLUTCH ASSY - #550839 - MTH 45'**			1		
4	502543	. . NUT HEX M8-1.25 Z050			6		
5	500897	. . WASHER FL .437x1.000x.083 N500			8		
6	5001758	. . NUT HEX STO M10-1.5 N500			4		
9	052584	. PULLEY / W/12RIB X 8.582" DIA			1		
10	052476	. PLATE TRANSITION / FAN CLUTCH & SUPPORT			1		
11	502891	. SCREW CRG M8-1.25x40 G8.8 Z050			4		
12	500874	. WASHER FL 8.4x17.0x1.6 Z050			8		
13	5001003	. WASHER LO SPT 8.1x12.7x2.0 Z050			10		
14	502543	. NUT HEX M8-1.25 Z050			4		
15	500897	. WASHER FL .437x1.000x.083 N500			4		
16	500680	. NUT HEX STO M10-1.5 Z050			4		
17	507627	. MULTI V-BELT / 12 RIB 82 41/64" (2100) 827K12BU			1		F
17	506064	. MULTI V-BELT / 12 RIB 83 1/2" (2121)			1		C
18	500171	. SCREW CAP HEX 1/4-20x1 G5 N500			3		
19	955920	. WASHER LO SPT 6.5x11.5x1.6 ZP			3		
20	550879	. CONE BUSHING 1 1/4 I.D X 1 13/16 O.D. X 2 5			1		
22	500218	. WASHER LO SPT .380x.683x.098 DP320			6		
23	502906	. SCREW CAP HEX 3/8-24x1 1/4 G5 N500			6		
24	550186	. KEY 1/4" X 1/4" X 1 1/4"			2		
25	**Y2-0525-00**	**. GEARBOX "SUPERIOR" - #550789, 550810 & 550897**					
26	052586	. PULLEY (3V X 7.40 DIA)			1		
27	550878	. CONE BUSHING 1 1/4 I.D X 3 O.D. X 4 5/8 O.D			1		
28	052492	. PLATE			1		
30	052673	. PULLEY ASSY W/BEARING & SEAL / 54MM x 117MM			1		
30	052896	. . PULLEY ASSY W/BEARING / 54MM x 117MM O.D.			1		
30	052625	. . . PULLEY / 54MM x 117MM O.D.			1		
31	510618	. . . BALL BEARING DBL ROW / 30MM x 62MM x 27 W			1		
32	504040	. . . RING RETAINER / INT 2.440 x 1.860 x 0.078 STL BLK			1		
33	052627	. . BUSHING TRANSFER FAN			2		
34	507371	. . SEAL			2		
NS	680752	. . GREASE LITHIUM / BLUE			AR		
36	550840	. BELLOW ASSY / BELT TENSIONER / 4" O.D.			1		
37	052624	. ARM, BELT TENSIONER / IRON USE W 54MM WIDE PULLEY			1		
38	500444	. WASHER FL .406x.812x.065 Z050			1		
39	500478	. WASHER LO SPT .380x.683x.094 Z050			1		
40	500191	. SCREW CAP HEX 3/8-16x1 G5 Z050			1		
41	5001252	. NUT HEX STO M20-2.5 DP			1		
NS	502558	. WASHER FL 21.0x37.0x3.0 G500			1		
42	983296	. SCREW CAP HEX M20-2.5x90 G10.9 ZP			1		
43	5001628	. NUT HEX NYRT M10-1.5 SS			1		

From 6-8815 To 8-9339		Date:07/2024	PAGE:Y2-0520-51

FAN DRIVE - INSTALLATION - LONG

Item#	Part	Description	XLII 45	XLII MTH40	XLII MTH45	XLII MTH45E	NOTES
44	500270	. WASHER FL .406x1.000x.063 SS			1		
45	507293	. BUSHING NYLINED .625x.750x.750			2		
46	052670	. PIVOT / TO FIX TENSIONER TO SUPPORT			1		
NS	501497	. GREASE FITTING / 1/4-28			1		
47	500449	. WASHER FL .625x1.500 SS			AR		
48	052664	. SUPPORT FAN CLUTCH & GEAR BOX / LONG			1		
49	500802	. WASHER LO SPT 16.2x37.4x3.5 Z050			1		
50	502588	. NUT HEX M16-2.0 ZP			1		
51	052621	. BELLOW TENSIONER			1		
52	502875	. SCREW CAP HEX M12-1.75x40 G8.8 N50			2		
53	971072	. NUT HEX M12-1.75 ZG603			2		
54	500944	. WASHER LO SPT .506x.873x.125 N500			6		
NS	500211	. WASHER FL .531x1.250x.125 N500			2		
55	500214	. SCREW CAP HEX 1/2-13x1 1/4 G5 Z050			4		
56	500735	. NUT HEX STO 3/4-16 ZP			2		
57	500451	. WASHER FL .812x2.000x.148 ZP			2		
58	630002	. BUSHING / RUBBER / (TWO PIECES) 1" x 1.005" I.D.			2		
NS	507347	. SPACER / BUSHING			2		
59	500145	. SCREW CAP HEX 3/4-16x3 1/2 G5 Z050			2		
60	052429	. SUPPORT, ANGLE			2		
62	502901	. WASHER FL .625x1.469x.109 N500			1		
63	502917	. NUT HEX JAM 3/4-16 G2 N500			1		
64	501036	. MALE ELBOW 90º / SAE 45º FITTING / #4FL-Mx1/8NPT-M BR			1		
65	052688	. SPRING ATTACHMENT W/54MM WIDE PULLEY			1		
NS	502903	. SCREW TC FL PH #10-24x1 1/4 N500			1		
66	502247	. SPRING COMPRESSION / 1.250 O.D. x 2.5 x .125			1		
67	504487	. RIVET MGLP PRDG 3/16x7/16 SS			2		
70	550838	FAN ASSY / CW 36" / 9 BLADES PLASTIC			1		
71	**Y2-0120-50**	**DRIVE PULLEY & BELTS - MTH**	1	1	1	1	
72	052310	ATTACHMENT PLATE ASSY / TO FIX ANGLE TO FLOOR			2		
74	971072	NUT HEX M12-1.75 ZG603			4		
NS	5001568	NUT PUSH RND M12 ZP			4		
75	052361	HOSE ASSY TEFLON #4 950MM			1		
80	500606	SCREW MA TR PH #10-24x3/4 SS			1		
81	500914	WASHER LO SPT .193x.334x.047 N500			2		
82	952624	CLAMP / 1/4" I.D.			1		
83	502882	NUT HEX #10-24 N500			1		
90	053441	SUPPORT BELLOW TENTIONER To 6-8878			1		
. NS	WB04-05C	. SEE WARRANTY BULLETIN To 6-8878			1		
90	052707	SUPPORT BELLOW TENTIONER From 6-8879			1		S
91	**Y2-0125-01**	**BELTS TENSIONERS - WITH DETROIT S-60**					
100	052661	SUPPORT UPPER PULLEY TENSIONER			1		

From 6-8815 To 8-9339		Date:07/2024	PAGE:Y2-0520-51

FAN DRIVE - INSTALLATION - LONG

Item#	Part	Description	XLII 45	XLII MTH40	XLII MTH45	XLII MTH45E	NOTES
101	052626	SHAFT UPPER PULLEY TENSIONER			1		
102	052672	PULLEY ASSY W/BEARING & SHAFT / 54MM x 117MM			1		
103	052896	. PULLEY ASSY W/BEARING / 54MM x 117MM O.D.			1		
103	052625	. . PULLEY / 54MM x 117MM O.D.			1		
104	507371	. SEAL			1		
105	504040	. RING RETAINER / INT 2.440 x 1.860 x 0.078 STL BLK			1		
106	510618	. BALL BEARING DBL ROW / 30MM x 62MM x 27 W			1		
107	012062	WASHER FL 10.2 x38.1x5 ST			1		
108	500829	SCREW CAP HEX M10-1.5x40 G8.8			1		
109	510798	PROTECTOR CAP / "PREVOST"			1		
110	5001252	NUT HEX STO M20-2.5 DP			1		
111	502558	WASHER FL 21.0x37.0x3.0 G500			1		
112	052666	AIR DEFLECTOR / BELT			1		
113	5001433	SCREW CAP HEX M6-1.0x25 SS			2		
114	5001182	NUT HEX NYRT M6-1.0 SS			2		
120	500806	SCREW CAP HEX M12-1.75X35 G10.9 G500			1		
120	500065	SCREW CAP HEX M10-1.5x30 G10.9 DP			3		
120	500270	WASHER FL .406x1.000x.063 SS			3		
121	500958	WASHER FL .531x1.062x.095 SS			1		
121	502616	WASHER LO SPT 10.2x18.1x2.2 SS			1		
122	500811	NUT HEX STO M12-1.75 G500			1		
		C) USE WITH CURRENT FAN CLUTCH #550966 WITH TAB LOCK SEE IMAGE					
		F) USE WITH FORMER FAN CLUTCH #550966 WITH SCREW LOCK SEE IMAGE					
		S) SERVICE					
		P) CALL ORDER DESK FOR SPECIFIC APPLICATION (V.I.N.)					

From Y-7046 To 3-8164		Date:07/2024	PAGE:Y2-0520-98

FAN DRIVE - INSTALLATION - SHORT / "RETROFIT"

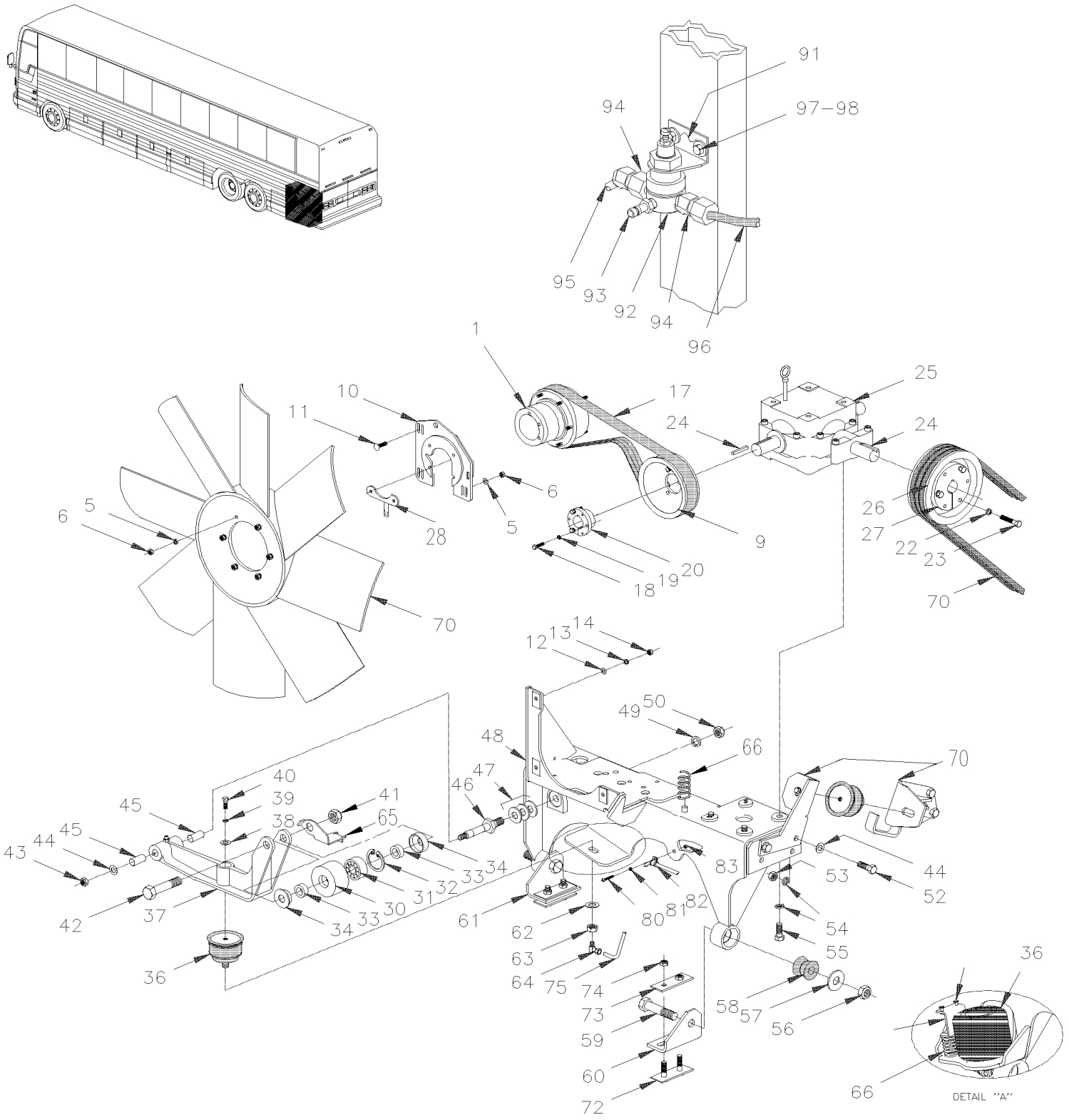

From Y-7046 To 3-8164		Date:07/2024	PAGE:Y2-0520-98
FAN DRIVE - INSTALLATION - SHORT / "RETROFIT"			

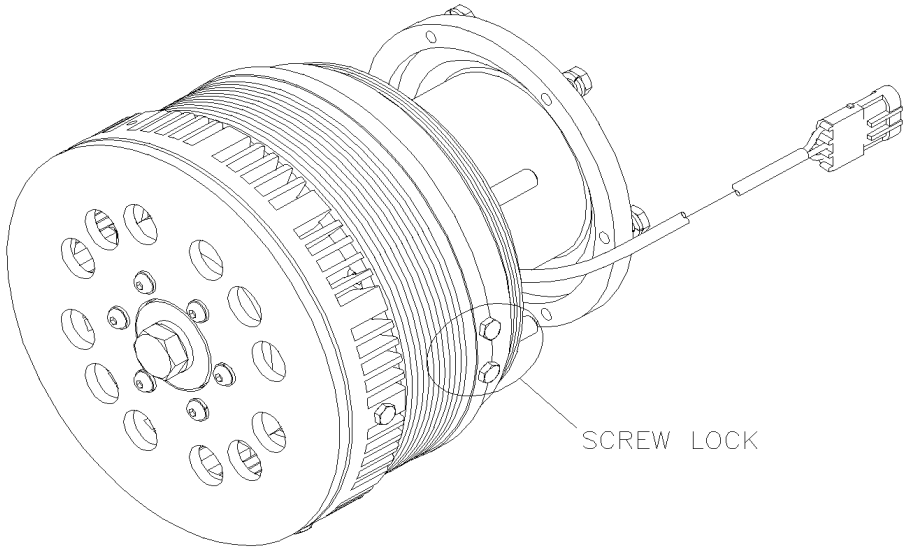

From Y-7046 To 3-8164		Date:07/2024	PAGE:Y2-0520-98

FAN DRIVE - INSTALLATION - SHORT / "RETROFIT"

Item#	Part	Description	XLII 45	XLII MTH40	XLII MTH45	XLII MTH45E	NOTES
		NEXT KIT ARE USE ONLY WITH					
		3" BELLOW TENSIONER W/O.E.M. INSTALLATION	1	1	1	1	
NS	052665	KIT, UPGRADE ONLY / SMALL TO LARGE FAN CLUTCH		1		1	
. NS	IS-04106A	. SEE INSTRUCTION SHEET		1		1	
		NEXT KIT ARE USE ONLY WITH					
		4" BELLOW TENSIONER W/O.E.M. INSTALLATION	1	1	1	1	
	052674	FAN DRIVE ASSY W/LARGE FAN CLUTCH 550839					A
1	**Y2-0540-52**	**. FAN CLUTCH ASSY - #550839 - MTH 45'**					
4	502543	. . NUT HEX M8-1.25 Z050	6	6	6	6	
5	502644	. . WASHER FL 10.5x30.0x2.5 Z050	8	8	8	8	
6	5001758	. . NUT HEX STO M10-1.5 N500	4	4	4	4	
9	052584	. PULLEY / W/12RIB X 8.582" DIA	1	1	1	1	
10	052652	. PLATE TRANSITION / FAN CLUTCH & SUPPORT / W/550839 RETROFIT ONLY	1	1	1	1	
11	502891	. SCREW CRG M8-1.25x40 G8.8 Z050	3	3	3	3	
12	500874	. WASHER FL 8.4x17.0x1.6 Z050	3	3	3	3	
13	502889	. WASHER LO SPT 8.1x12.7x2.0 N500	3	3	3	3	
13	955920	. WASHER LO SPT 6.5x11.5x1.6 ZP	3	3	3	3	
14	502543	. NUT HEX M8-1.25 Z050	3	3	3	3	
17	5060071	. MULTI V-BELT / 12 RIB 57.48" (1460MM)	1	1	1	1	F
17	506060	. MULTI V-BELT / 12 RIB 58.39" (1483MM)	1	1	1	1	C
18	500171	. SCREW CAP HEX 1/4-20x1 G5 N500	3	3	3	3	
19	955920	. WASHER LO SPT 6.5x11.5x1.6 ZP	3	3	3	3	
20	550879	. CONE BUSHING 1 1/4 I.D X 1 13/16 O.D. X 2 5	1	1	1	1	
22	500218	. WASHER LO SPT .380x.683x.098 DP320	3	3	3	3	
23	502906	. SCREW CAP HEX 3/8-24x1 1/4 G5 N500	3	3	3	3	
24	550186	. KEY 1/4" X 1/4" X 1 1/4"	2	2	2	2	
25	**Y2-0525-00**	**. GEARBOX "SUPERIOR" - #550789, 550810 & 550897**					
26	051603	. PULLEY (3V X 7.40 DIA)	1	1	1	1	
27	550878	. CONE BUSHING 1 1/4 I.D X 3 O.D. X 4 5/8 O.D	1	1	1	1	
28	052691	. PLATE ASSY / W/RETAINER CABLE	1	1	1	1	
30	052676	. PULLEY ASSY W/BEARING & SEAL / 54MM x 75MM	1	1	1	1	
30	052677	. . PULLEY / 54MM WIDE x 75MM O.D.	1	1	1	1	
31	510618	. . BALL BEARING DBL ROW / 30MM x 62MM x 27 W	1	1	1	1	
32	504040	. . RING RETAINER / INT 2.440 x 1.860 x 0.078 STL BLK	1	1	1	1	
33	052627	. . BUSHING TRANSFER FAN	2	2	2	2	

From Y-7046 To 3-8164		Date:07/2024	PAGE:Y2-0520-98

FAN DRIVE - INSTALLATION - SHORT / "RETROFIT"

Item#	Part	Description	XLII 45	XLII MTH40	XLII MTH45	XLII MTH45E	NOTES
34	507371	. . SEAL	2	2	2	2	
NS	680752	. . GREASE LITHIUM / BLUE	AR	AR	AR	AR	
36	550840	. BELLOW ASSY / BELT TENSIONER / 4" O.D.	1	1	1	1	
37	051991	. ARM, BELT TENSIONER / IRON USE W 45MM WIDE PULLEY	1	1	1	1	
38	500444	. WASHER FL .406x.812x.065 Z050	1	1	1	1	
39	500478	. WASHER LO SPT .380x.683x.094 Z050	1	1	1	1	
40	500191	. SCREW CAP HEX 3/8-16x1 G5 Z050	1	1	1	1	
41	5001252	. NUT HEX STO M20-2.5 DP	1	1	1	1	
NS	502558	. WASHER FL 21.0x37.0x3.0 G500	1	1	1	1	
42	983296	. SCREW CAP HEX M20-2.5x90 G10.9 ZP	1	1	1	1	
43	5001628	. NUT HEX NYRT M10-1.5 SS	1	1	1	1	
44	500446	. WASHER FL .531x1.250x.125 Z050	1	1	1	1	
45	507293	. BUSHING NYLINED .625x.750x.750	2	2	2	2	
46	052670	. PIVOT / TO FIX TENSIONER TO SUPPORT	1	1	1	1	
NS	501497	. GREASE FITTING / 1/4-28	1	1	1	1	
47	500449	. WASHER FL .625x1.500 SS	AR	AR	AR	AR	
48	052649	. SUPPORT FAN CLUTCH & GEAR BOX / SHORT / W/550839 RETROFIT ONLY	1	1	1	1	
49	500802	. WASHER LO SPT 16.2x37.4x3.5 Z050	1	1	1	1	
50	502588	. NUT HEX M16-2.0 ZP	1	1	1	1	
52	502875	. SCREW CAP HEX M12-1.75x40 G8.8 N50	2	2	2	2	
53	500811	. NUT HEX STO M12-1.75 G500	2	2	2	2	
54	500944	. WASHER LO SPT .506x.873x.125 N500	6	6	6	6	
NS	500211	. WASHER FL .531x1.250x.125 N500	6	6	6	6	
55	500214	. SCREW CAP HEX 1/2-13x1 1/4 G5 Z050	4	4	4	4	
56	500735	. NUT HEX STO 3/4-16 ZP	2	2	2	2	
57	500451	. WASHER FL .812x2.000x.148 ZP	2	2	2	2	
58	630002	. BUSHING / RUBBER / (TWO PIECES) 1" x 1.005" I.D.	2	2	2	2	
NS	507347	. SPACER / BUSHING	2	2	2	2	
59	500145	. SCREW CAP HEX 3/4-16x3 1/2 G5 Z050	2	2	2	2	
60	059053	. SUPPORT, ANGLE / FRONT	1	1	1	1	
61	059051	. SUPPORT, ANGLE / REAR	1	1	1	1	
62	502901	. WASHER FL .625x1.469x.109 N500	1	1	1	1	
63	502917	. NUT HEX JAM 3/4-16 G2 N500	1	1	1	1	
64	501036	. MALE ELBOW 90º / SAE 45º FITTING / #4FL-Mx1/8NPT-M BR	1	1	1	1	
65	052655	SPRING ATTACHMENT	1	1	1	1	
66	502247	SPRING COMPRESSION / 1.250 O.D. x 2.5 x .125	1	1	1	1	
67	504487	RIVET MGLP PRDG 3/16x7/16 SS	2	2	2	2	
70	**Y2-0520-00**	**FAN DRIVE - INSTALLATION - SHORT**					
72	051779	ATTACHMENT PLATE ASSY / TO FIX ANGLE TO FLOOR	2	2	2	2	
73	050706	SPACER 3/8" TH	AR	AR	AR	AR	
73	050705	SPACER 1/4" TH	AR	AR	AR	AR	
74	971072	NUT HEX M12-1.75 ZG603	4	4	4	4	

From Y-7046 To 3-8164		Date:07/2024	PAGE:Y2-0520-98

FAN DRIVE - INSTALLATION - SHORT / "RETROFIT"

Item#	Part	Description	XLII 45	XLII MTH40	XLII MTH45	XLII MTH45E	NOTES
NS	5001568	NUT PUSH RND M12 ZP	4	4	4	4	
75	031054	HOSE ASSY TEFLON #4 770MM	1	1	1	1	
75	052535	HOSE ASSY TEFLON #4 662MM	1	1	1	1	
80	500606	SCREW MA TR PH #10-24x3/4 SS	1	1	1	1	
81	500914	WASHER LO SPT .193x.334x.047 N500	2	2	2	2	
82	952624	CLAMP / 1/4" I.D.	1	1	1	1	
83	502882	NUT HEX #10-24 N500	1	1	1	1	
91	142013	SUPPORT AIR REGULATOR / ANGLE 90DEG STYLE	1	1	1	1	
92	641472	AIR PRESSURE REGULATOR 1/4" NPT / COPPER	1	1	1	1	
93	640488	VALVE, AIR FILL 1/8" NPT	1	1	1	1	
. NS	650164	. CAP VALVE / CHROME	1	1	1	1	
94	501027	MALE CONNECTOR / SAE 45º FITTING / #4FL-Mx1/4NPT-M BR	2	2	2	2	
95	052667	HOSE ASSY TEFLON #4 1524MM	1	1	1	1	
96	052668	HOSE ASSY TEFLON #4 1524MM	1	1	1	1	
NS	509815	TIE MOUNT / ATTACHMENT W/TREE MOUNT	3	3	3	3	
		A) FAN DRIVE ASSY SUPPERSEEDE FORMER MODEL ASSY 052006P					
		C) USE WITH FAN CLUTCH #550057					
		F) USE WITH FORMER FAN CLUTCH #550966 WITH SCREW LOCK SEE IMAGE					

From 4-8165 To 6-8814		Date:07/2024	PAGE:Y2-0520-99
FAN DRIVE - INSTALLATION - SHORT / "RETROFIT"			

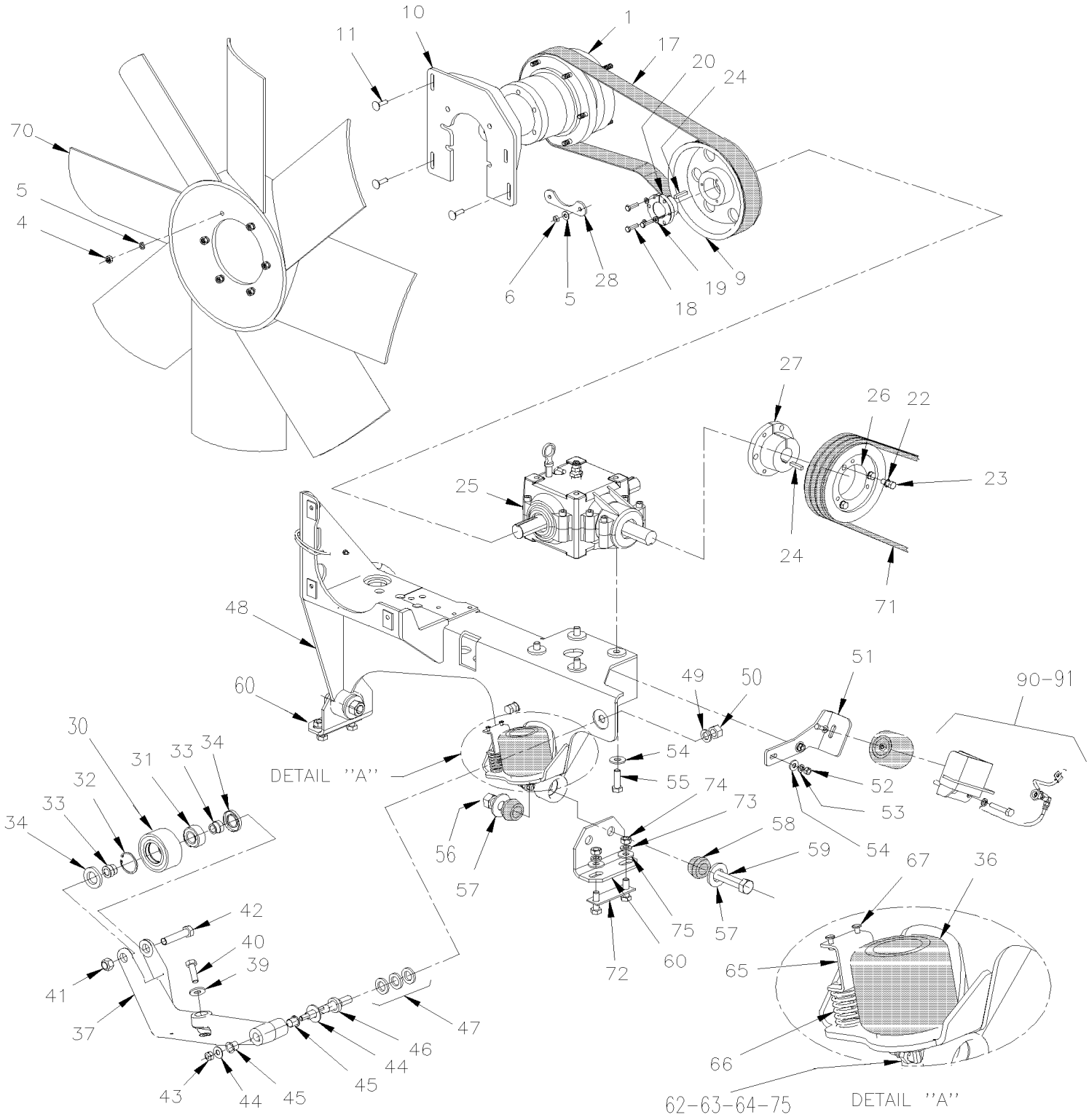

From 4-8165 To 6-8814		Date:07/2024	PAGE:Y2-0520-99

FAN DRIVE - INSTALLATION - SHORT / "RETROFIT"

Item#	Part	Description	XLII 45	XLII MTH40	XLII MTH45	XLII MTH45E	NOTES
		NEXT KIT ARE USE ONLY WITH	1	1	1	1	
		3" BELLOW TENSIONER W/O.E.M. INSTALLATION	1	1	1	1	
	052788	KIT, UPGRADE ONLY / SMALL TO LARGE FAN CLUTCH From 4-8165 To 4-8392	1	1	1	1	
. NS	IS-04019	. SEE INSTRUCTION SHEET From 4-8165 To 4-8392	1	1	1	1	
		NEXT KIT ARE USE ONLY WITH	1	1	1	1	
		4" BELLOW TENSIONER W/O.E.M. INSTALLATION	1	1	1	1	
	052705	KIT, UPGRADE ONLY / SMALL TO LARGE FAN CLUTCH W/O.E.M. INSTALLATION From 4-8393 To 6-8809	1	1	1	1	
. NS	IS-04019	. SEE INSTRUCTION SHEET From 4-8393 To 6-8809	1	1	1	1	
1	**Y2-0540-03**	**FAN CLUTCH ASSY - #550839 - BUS, MTH 40' & MTH-45E**					
4	502543	. NUT HEX M8-1.25 Z050	6	6	6	6	
5	502644	. WASHER FL 10.5x30.0x2.5 Z050	8	8	8	8	
6	5001758	. NUT HEX STO M10-1.5 N500	4	4	4	4	
9	052584	PULLEY / W/12RIB X 8.582" DIA	1	1	1	1	
10	052596	PLATE TRANSITION / FAN CLUTCH & SUPPORT	1	1	1	1	
11	502891	SCREW CRG M8-1.25x40 G8.8 Z050	4	4	4	4	
12	500874	WASHER FL 8.4x17.0x1.6 Z050	3	3	3	3	
13	502889	WASHER LO SPT 8.1x12.7x2.0 N500	3	3	3	3	
13	955920	WASHER LO SPT 6.5x11.5x1.6 ZP	3	3	3	3	
14	502543	NUT HEX M8-1.25 Z050	3	3	3	3	
17	5060073	MULTI V-BELT / 12 RIB 61.41" (1560MM) VBR614K12	1	1	1	1	
17	5002112	MULTI V-BELT / 12 RIB 62.40" (1585MM)	1	1	1	1	A
18	500171	SCREW CAP HEX 1/4-20x1 G5 N500	3	3	3	3	
19	955920	WASHER LO SPT 6.5x11.5x1.6 ZP	3	3	3	3	
20	550879	CONE BUSHING 1 1/4 I.D X 1 13/16 O.D. X 2 5	1	1	1	1	
22	500546	WASHER LO EXT .384x.694x.040 Z050	6	6	6	6	
23	502906	SCREW CAP HEX 3/8-24x1 1/4 G5 N500	6	6	6	6	
24	550186	KEY 1/4" X 1/4" X 1 1/4"	2	2	2	2	
25	**Y2-0525-00**	**GEARBOX "SUPERIOR" - #550789, 550810 & 550897**					
26	052585	PULLEY (3V X 6.92 DIA)	1	1	1	1	
27	550878	CONE BUSHING 1 1/4 I.D X 3 O.D. X 4 5/8 O.D	1	1	1	1	
28	052492	PLATE	1	1	1	1	
30	052673	PULLEY ASSY W/BEARING & SEAL / 54MM x 117MM	1	1	1	1	
30	052896	. PULLEY ASSY W/BEARING / 54MM x 117MM O.D.	1	1	1	1	
30	052625	. . PULLEY / 54MM x 117MM O.D.	1	1	1	1	
31	510618	. . BALL BEARING DBL ROW / 30MM x 62MM x 27 W	1	1	1	1	
32	504040	. . RING RETAINER / INT 2.440 x 1.860 x 0.078 STL BLK	1	1	1	1	
33	052627	. BUSHING TRANSFER FAN	2	2	2	2	
34	507371	. SEAL	2	2	2	2	

From 4-8165 To 6-8814		Date:07/2024	PAGE:Y2-0520-99

FAN DRIVE - INSTALLATION - SHORT / "RETROFIT"

Item#	Part	Description	XLII 45	XLII MTH40	XLII MTH45	XLII MTH45E	NOTES
NS	680752	. GREASE LITHIUM / BLUE	AR	AR	AR	AR	
36	550840	BELLOW ASSY / BELT TENSIONER / 4" O.D.	1	1	1	1	
37	052624	ARM, BELT TENSIONER / IRON USE W 54MM WIDE PULLEY	1	1	1	1	
39	500218	WASHER LO SPT .380x.683x.098 DP320	1	1	1	1	
NS	500832	WASHER FL .406x.812x.065 N500	1	1	1	1	
40	502926	SCREW CAP HEX 3/8-16x7/8 G5 N500	1	1	1	1	
41	5001252	NUT HEX STO M20-2.5 DP	1	1	1	1	
NS	502558	WASHER FL 21.0x37.0x3.0 G500	1	1	1	1	
42	983296	SCREW CAP HEX M20-2.5x90 G10.9 ZP	1	1	1	1	
43	502617	NUT HEX NYRT M10-1.5 Z050	1	1	1	1	
44	500270	WASHER FL .406x1.000x.063 SS	1	1	1	1	
45	507293	BUSHING NYLINED .625x.750x.750	2	2	2	2	
46	052670	PIVOT / TO FIX TENSIONER TO SUPPORT	1	1	1	1	
NS	501497	GREASE FITTING / 1/4-28	1	1	1	1	
47	500449	WASHER FL .625x1.500 SS	AR	AR	AR	AR	
48	052571	SUPPORT FAN CLUTCH & GEAR BOX / SHORT	1	1	1	1	
49	500802	WASHER LO SPT 16.2x37.4x3.5 Z050	1	1	1	1	
50	502588	NUT HEX M16-2.0 ZP	1	1	1	1	
51	052645	BELLOW TENSIONER / W/4" BELLOW	1	1	1	1	
52	502875	SCREW CAP HEX M12-1.75x40 G8.8 N50	2	2	2	2	
53	500811	NUT HEX STO M12-1.75 G500	2	2	2	2	
54	500944	WASHER LO SPT .506x.873x.125 N500	6	6	6	6	
NS	500211	WASHER FL .531x1.250x.125 N500	2	2	2	2	
55	500214	SCREW CAP HEX 1/2-13x1 1/4 G5 Z050	4	4	4	4	
56	500735	NUT HEX STO 3/4-16 ZP	2	2	2	2	
57	500451	WASHER FL .812x2.000x.148 ZP	2	2	2	2	
58	630002	BUSHING / RUBBER / (TWO PIECES) 1" x 1.005" I.D.	2	2	2	2	
NS	507347	SPACER / BUSHING	2	2	2	2	
59	500145	SCREW CAP HEX 3/4-16x3 1/2 G5 Z050	2	2	2	2	
60	052494	SUPPORT, ANGLE	2	2	2	2	
62	502901	WASHER FL .625x1.469x.109 N500	1	1	1	1	
63	502917	NUT HEX JAM 3/4-16 G2 N500	1	1	1	1	
64	501036	MALE ELBOW 90º / SAE 45º FITTING / #4FL-Mx1/8NPT-M BR	1	1	1	1	
65	052688	SPRING ATTACHMENT W/54MM WIDE PULLEY	1	1	1	1	
66	502247	SPRING COMPRESSION / 1.250 O.D. x 2.5 x .125	1	1	1	1	
67	504487	RIVET MGLP PRDG 3/16x7/16 SS	2	2	2	2	
70	550832	FAN ASSY / CW 34" / 9 BLADES PLASTIC	1	1	1	1	
71	**Y2-0120-00**	**DRIVE PULLEY & BELTS - BUS & MTH**					
72	052310	ATTACHMENT PLATE ASSY / TO FIX ANGLE TO FLOOR	2	2	2	2	
73	5001568	NUT PUSH RND M12 ZP	4	4	4	4	
74	971072	NUT HEX M12-1.75 ZG603	4	4	4	4	
75	052590	HOSE ASSY TEFLON #4 830MM	1	1	1	1	

From 4-8165 To 6-8814		Date:07/2024	PAGE:Y2-0520-99

FAN DRIVE - INSTALLATION - SHORT / "RETROFIT"

Item#	Part	Description	XLII 45	XLII MTH40	XLII MTH45	XLII MTH45E	NOTES
NS	500606	SCREW MA TR PH #10-24x3/4 SS	1	1	1	1	
NS	500914	WASHER LO SPT .193x.334x.047 N500	2	2	2	2	
NS	952624	CLAMP / 1/4" I.D.	1	1	1	1	
NS	502882	NUT HEX #10-24 N500	1	1	1	1	
90	052706	SUPPORT BELLOW TENTIONER / W/4" BELLOW	1	1	1	1	
91	**Y2-0125-01**	**BELTS TENSIONERS - WITH DETROIT S-60**					
		A) USE WITH FAN CLUTCH 550057					

From Y-7046 To 8-9339		Date:07/2024	PAGE:Y2-0525-00
GEARBOX "SUPERIOR" - #550789, 550810 & 550897			

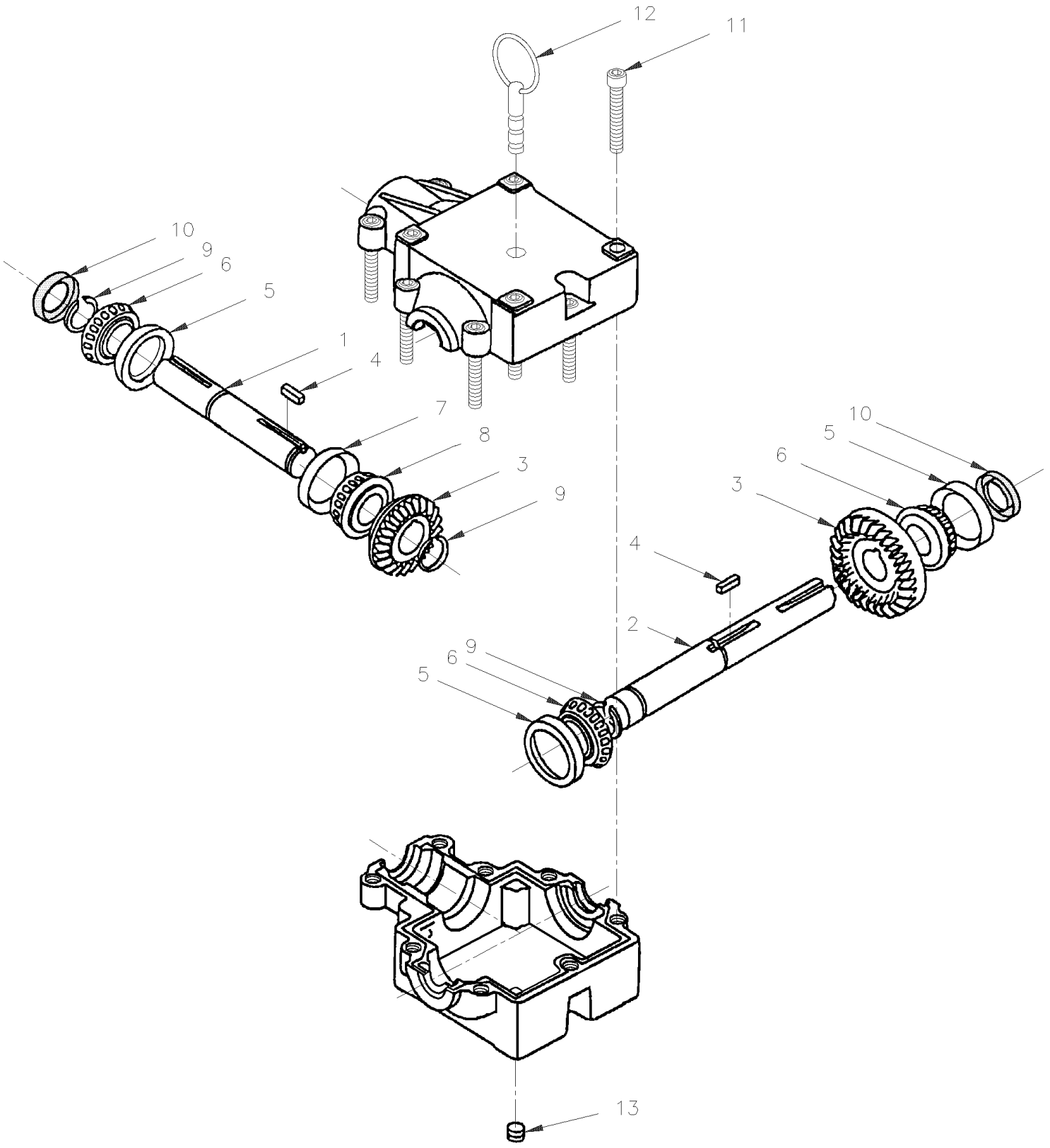

From Y-7046 To 8-9339		Date:07/2024	PAGE:Y2-0525-00

GEARBOX "SUPERIOR" - #550789, 550810 & 550897

Item#	Part	Description	XLII 45	XLII MTH40	XLII MTH45	XLII MTH45E	NOTES
	550789	GEARBOX ASSY (CW) To 4-7304	1	1	1	1	A
	550810	GEARBOX ASSY (CW) From 4-7305 To 5-8512	1	1	1	1	
	550897	GEARBOX ASSY (CW) From 5-8513	1	1	1	1	
1	550732	. PINION SHAFT ASSY / INPUT 1 1/4" O.D. To 5-8512	1	1	1	1	
1	550880	. PINION SHAFT ASSY / INPUT 1 1/4" O.D. From 5-8513	1	1	1	1	
2	550733	. CROSS SHAFT ASSY / OUTPUT 1 1 1/4" O.D. To 5-8512	1	1	1	1	
2	550881	. CROSS SHAFT ASSY / OUTPUT 1 1 1/4" O.D. From 5-8513	1	1	1	1	
3	N.S.P.	. GEAR / (SOLD ASSY W/SHAFT)	2	2	2	2	2
4	N.S.P.	. KEY	2	2	2	2	2
5	550697	. CUP BEARING	3	3	3	3	
6	550696	. CONE BEARING	3	3	3	3	
7	550735	. CUP BEARING	1	1	1	1	
8	550734	. CONE BEARING	1	1	1	1	
9	550698	. RETAINING RING / GEAR	2	2	2	2	
10	550695	. SEAL 1 1/4" I.D. / (200 X 125 X 31)	3	3	3	3	
11	N.S.A.	. SCREW 3/8-16 X 2 1/4"	9	9	9	9	3
12	550773	. DIPSTICK To 4-7304	1	1	1	1	A
12	550812	. DIPSTICK From 4-7305	1	1	1	1	
13	504599	MAGNETIC DRAIN PLUG 1/4 NPT	1	1	1	1	
NS	550790	DECAL	1	1	1	1	
NS	180217	OIL SYNTHETIC SCH 630 (1 LITER)	AR	AR	AR	AR	
NS	683666	OIL SYNTHETIC SCH 630 (19 LITERS)	AR	AR	AR	AR	
NS	052387	KIT, FAN GEARBOX BREATHER	AR	AR	AR	AR	
. NS	IS-00049	. SEE INSTRUCTION SHEET					
		A) FOR PRODUCT IMPROVMENT ASK FOR KIT #052387					
		2) NOT SOLD BY PREVOST (SEE MANUFACTURING PART NUMBER AT END OF DESCRIPTION LINE)					
		3) NOT SOLD ASSEMBLY					

From Y-7046 To 3-8164		Date:07/2024	PAGE:Y2-0530-00
COOLANT FILTER - INSTALLATION WITH DETROIT S-60			

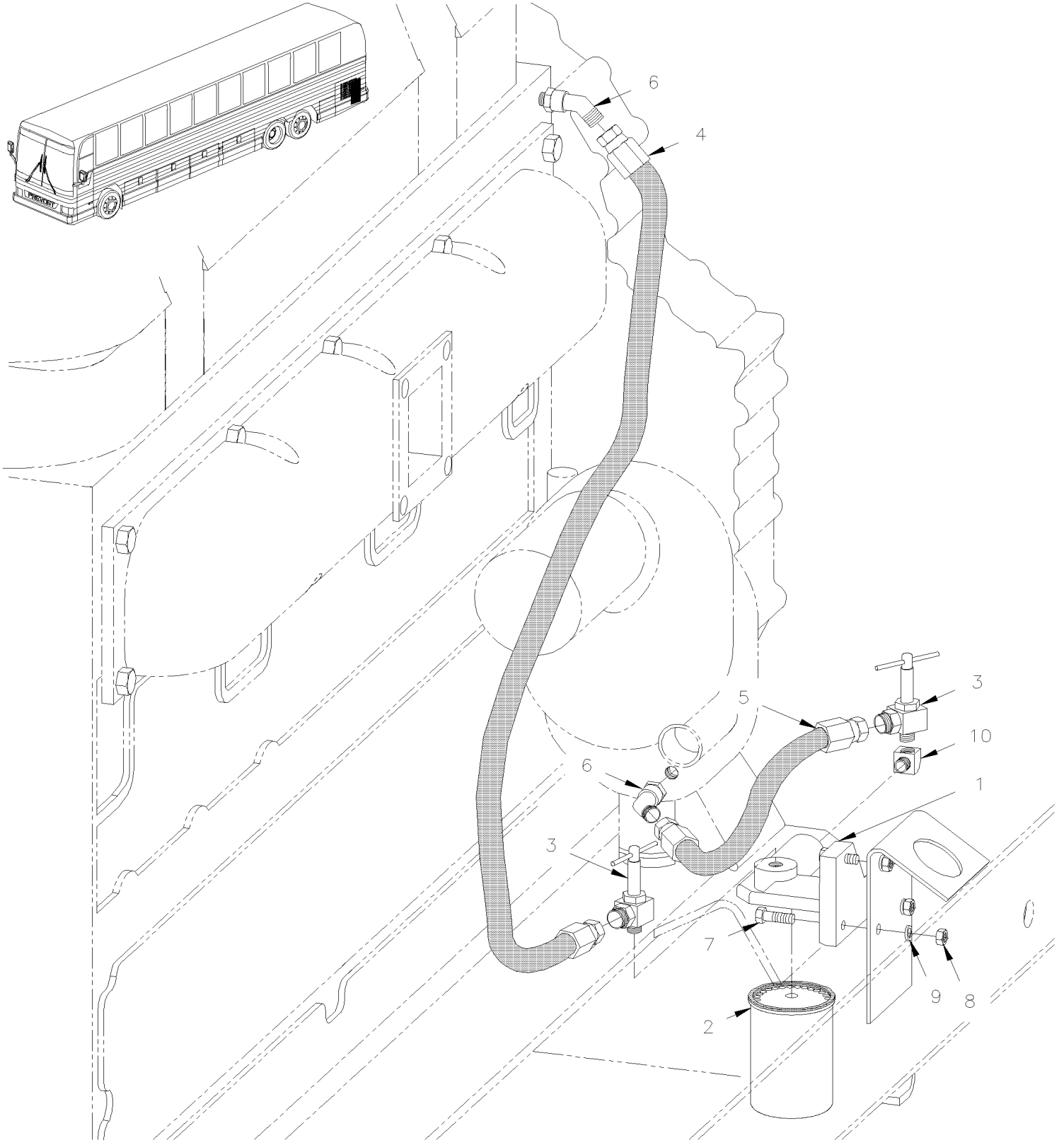

From Y-7046 To 3-8164		Date:07/2024	PAGE:Y2-0530-00

COOLANT FILTER - INSTALLATION WITH DETROIT S-60

Item#	Part	Description	XLII 45	XLII MTH40	XLII MTH45	XLII MTH45E	NOTES
1	550645	ADAPTOR HEAD, COOLANT FILTER	1	1	1	1	
1	550804	ADAPTOR HEAD, COOLANT FILTER	1	1	1	1	
2	550630	CARTRIGE "MAINTENANCE" "NALCOOL" 3000	1	1	1	1	
3	N.S.P.	VALVE, SHUTT-OFF 1/4 X 3/8 NPT (#330) W/HEATER HEAD	1	1	1	1	2
4	051902	HOSE ASSY / #6 865MM	1	1	1	1	
5	051903	HOSE ASSY / #6 300MM	1	1	1	1	
NS	503582	. HOSE #FC-300 HYDRAULIC / #6 S.L.	AR	AR	AR	AR	
NS	501836	. FEMALE CONNECTOR SWIVEL / SAE 45° FITTING / #6FL-Fx#6 STL	2	2	2	2	
6	5011034	MALE ELBOW 45º / SAE 45º FITTING / #6FL-Mx1/4NPT-M BR	2	2	2	2	
7	502589	SCREW CAP HEX M8-1.25x25 G8.8 Z050	3	3	3	3	
8	502543	NUT HEX M8-1.25 Z050	3	3	3	3	
9	5001003	WASHER LO SPT 8.1x12.7x2.0 Z050	3	3	3	3	
10	501333	STREET ELBOW 90º / PIPE FITTING / 3/8NPT-Mx3/8NPT-F BR	1	1	1	1	
11	011632	SUPPORT / WELD TO CRADLE	1	1	1	1	
		2) NOT SOLD BY PREVOST (SEE MANUFACTURING PART NUMBER AT END OF DESCRIPTION LINE)					

From 4-8165 To 8-9339		Date:07/2024	PAGE:Y2-0530-01
COOLANT FILTER - INSTALLATION WITH DETROIT S-60			

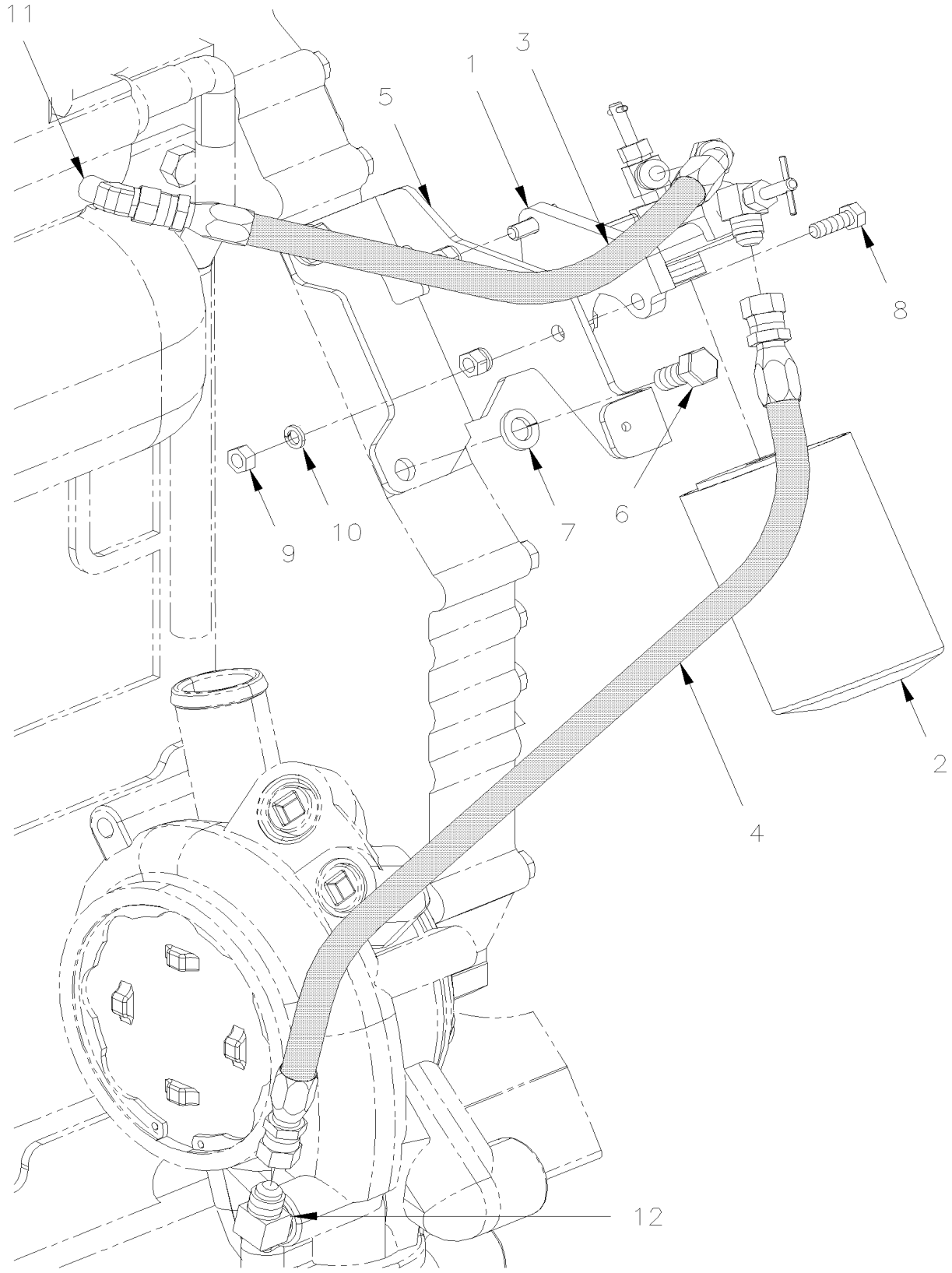

From 4-8165 To 8-9339		Date:07/2024	PAGE:Y2-0530-01

COOLANT FILTER - INSTALLATION WITH DETROIT S-60

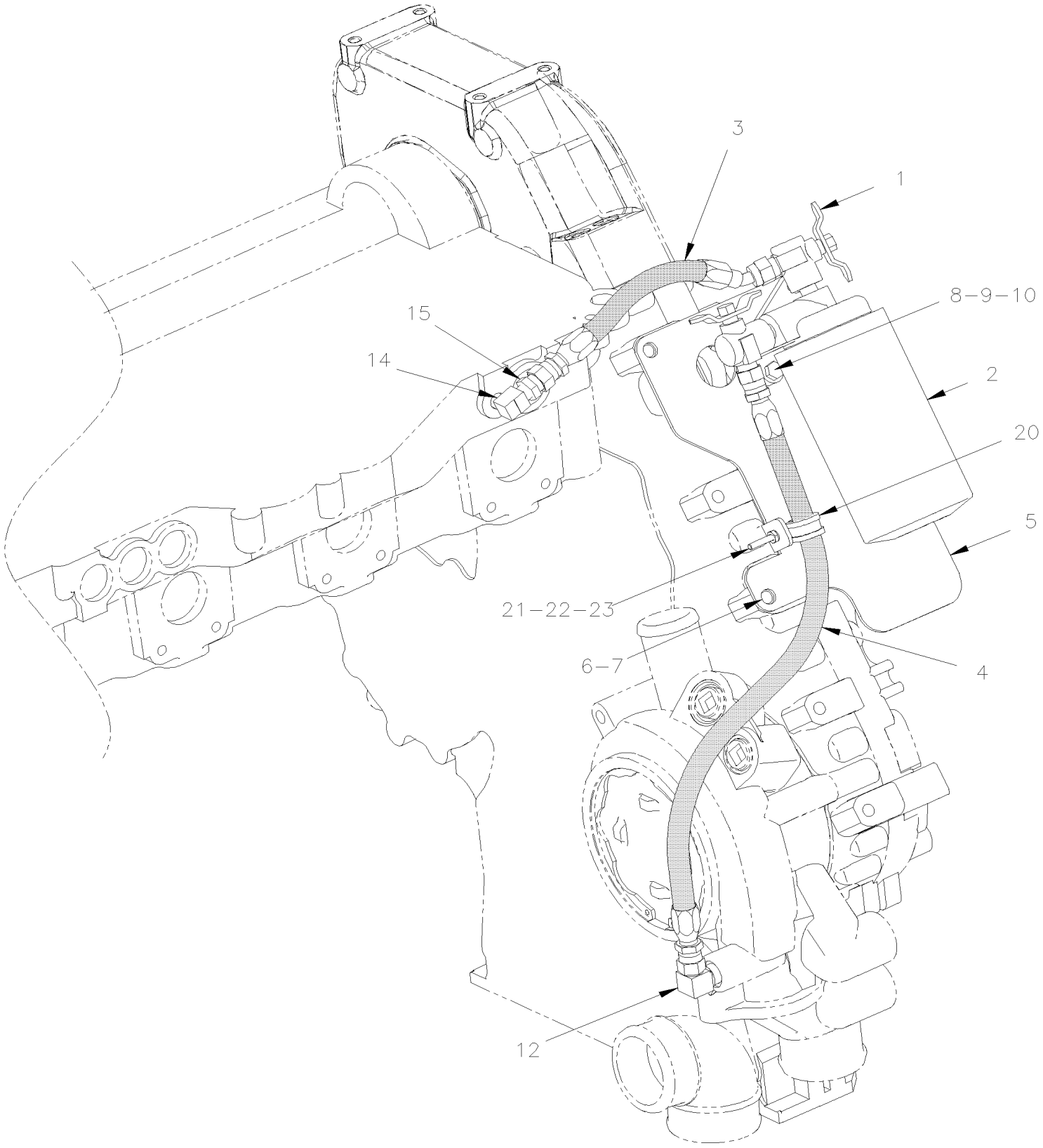

From 4-8165 To 8-9339		Date:07/2024	PAGE:Y2-0530-01

COOLANT FILTER - INSTALLATION WITH DETROIT S-60

Item#	Part	Description	XLII 45	XLII MTH40	XLII MTH45	XLII MTH45E	NOTES
1	550804	ADAPTOR HEAD, COOLANT FILTER To 4-8267	1	1	1	1	
1	550874	ADAPTOR HEAD, COOLANT FILTER From 4-8268	1	1	1	1	
1	550061	VALVE From 4-8268	2	2	2	2	
2	550630	CARTRIGE "MAINTENANCE" "NALCOOL" 3000	1	1	1	1	
3	052472	HOSE ASSY / #6 270MM To 4-8267	1	1	1	1	
3	052561	HOSE ASSY / #6 172MM From 4-8268 To 4-8308	1	1	1	1	
3	052609	HOSE ASSY / #6 151MM From 4-8309	1	1	1	1	
4	052471	HOSE ASSY / #6 540MM To 4-8267	1	1	1	1	
4	052562	HOSE ASSY / #6 465MM From 4-8268	1	1	1	1	
5	052438	SUPPORT, COOLANT FILTER To 4-8267	1	1	1	1	
5	052560	SUPPORT, COOLANT FILTER From 4-8268	1	1	1	1	
6	502705	SCREW CAP HEX M12-1.75X25 G8.8 N500	2	2	2	2	
7	500747	WASHER LO SPT 12.2x21.1x2.5 N500	2	2	2	2	
8	955297	SCREW CAP HEX M8-1.25x25 G8.8 ZG603	3	3	3	3	
9	502851	NUT HEX M8-1.25 N500	3	3	3	3	
10	502889	WASHER LO SPT 8.1x12.7x2.0 N500	3	3	3	3	
11	5011034	MALE ELBOW 45º / SAE 45º FITTING / #6FL-Mx1/4NPT-M BR To 4-8267	1	1	1	1	
12	501042	MALE ELBOW 90º / SAE 45º FITTING / #6FL-Mx3/8NPT-M BR	AR	AR	AR	AR	
14	501332	STREET ELBOW 90º / PIPE FITTING / 1/4NPT-Mx1/4NPT-F BR From 4-8268	1	1	1	1	
15	501029	MALE CONNECTOR / SAE 45º FITTING / #6FL-Mx1/4NPT-M BR From 4-8268 To 4-8308	1	1	1	1	
15	5011266	MALE CONNECTOR LONG / JIC 37° FITTING / #6JIC-Mx1/4NPT-Mx2 1/4 STL From 4-8309	1	1	1	1	
20	952629	CLAMP / 5/8" I.D. From 4-8268	1	1	1	1	
21	500574	SCREW MA TR PH #10-24x1 1/4 SS From 4-8268	1	1	1	1	
22	502882	NUT HEX #10-24 N500 From 4-8268	1	1	1	1	
23	500914	WASHER LO SPT .193x.334x.047 N500 From 4-8268	1	1	1	1	

From Y-7046 To 3-7940		Date:07/2024	PAGE:Y2-0540-00
FAN CLUTCH ASSY - #550803 - BUS			

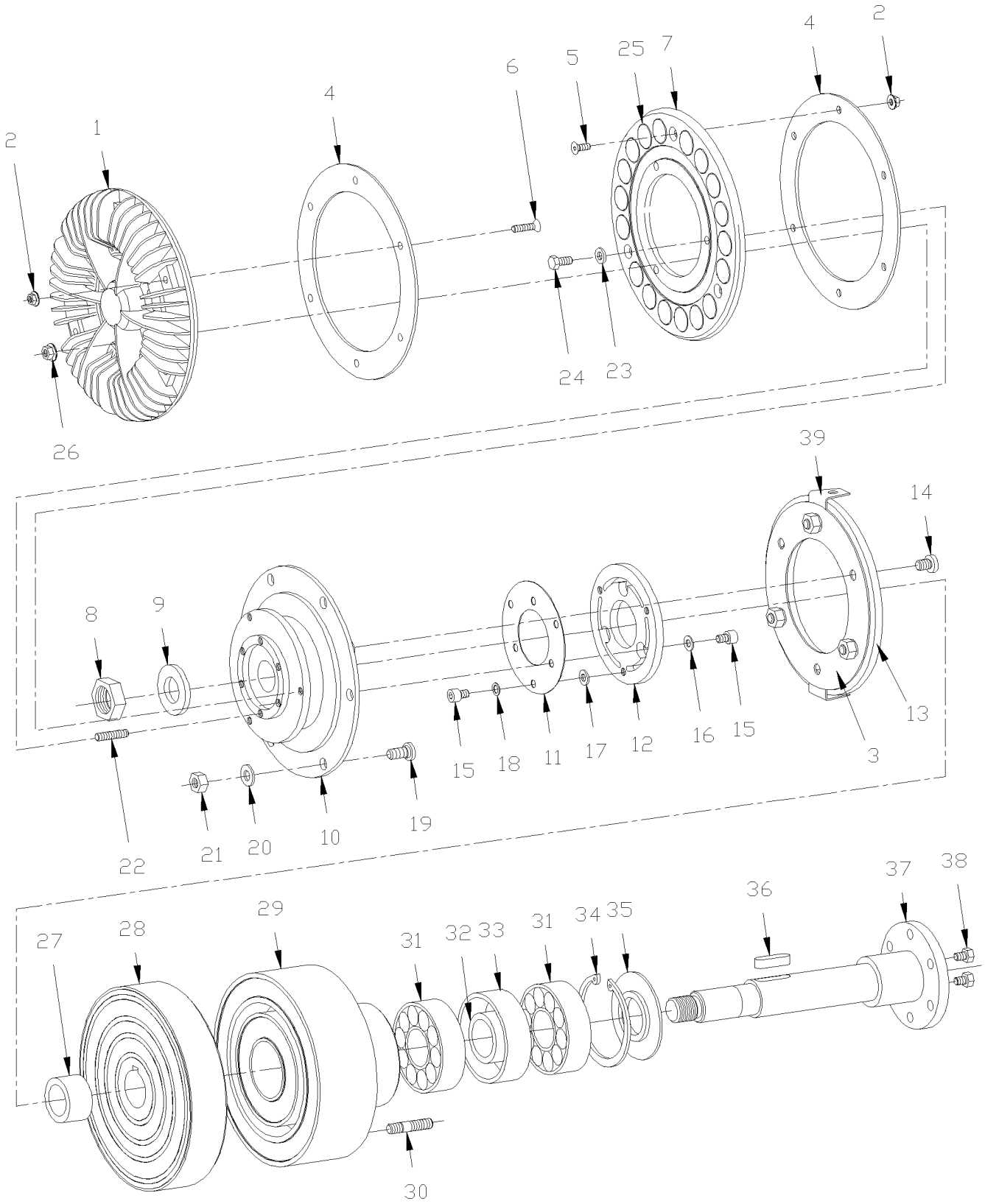

From Y-7046 To 3-7940		Date:07/2024	PAGE:Y2-0540-00

FAN CLUTCH ASSY - #550803 - BUS

Item#	Part	Description	XLII 45	XLII MTH40	XLII MTH45	XLII MTH45E	NOTES
	550803	FAN CLUTCH ASSY /	1				
1	550792	. COOLING FAN	1				
2	502782	. NUT HEX NYRT M5-0.8 Z050	9				
3	550667	. SPRING PLATE	1				
4	550659	. DISC	2				
5	502639	. SCREW MA FL PH M5-0.8X12 ZP	3				
6	N.P.N.	. SCREW, M5-0.8 X 25MM FLAT HEAD	6				4
7	550779	. MAGNET PLATE SUPPORT	1				
8	502767	. NUT HEX JAM M20-1.5 ZP	2				
9	502558	. WASHER FL 21.0x37.0x3.0 G500	2				
10	550780	. FLANGE DRIVEN ASSY W/BEARING	1				
. NS	550664	. . BEARING ASSY	1				
11	550781	. SPRING PLATE	1				
12	550782	. ARMATURE DISC / 1ST SPEED	1				
13	550783	. ARMATURE DISC / 2ND SPEED	1				
14	N.P.N.	. SOCKET HEAD CAP SCREW, M8-1.25 X 16MM (50-2755)	3				4
15	N.P.N.	. SOCKET HEAD CAP SCREW, M6-1.0 X 8MM (50-01025)	6				4
16	N.P.N.	. WASHER SHIM .05MM	3				4
17	N.P.N.	. WASHER	3				4
18	502564	. WASHER LO SPT 6.1x11.8x1.6 Z050	3				
19	550669	. STUD M8-1.25 X 19MM	6				B
20	500874	. WASHER FL 8.4x17.0x1.6 Z050	6				
21	502744	. NUT HEX STO M8-1.25 Z050	6				C
22	N.P.N.	. SET SCREW, M6-1.0 X 20MM	3				4
23	N.P.N.	. WASHER	3				4
24	5001106	. SCREW CAP HEX M6-1.0x10 G8.8 Z050	3				
25	550661	. MAGNET	18				
26	502511	. NUT HEX NYRT M6-1.0 Z050	3				
27	N.P.N.	. SPACER	1				4
28	550784	. ROTOR	1				
29	550785	. MAGNETIC COIL ASSY	1				
30	550675	. STUD M8-1.25 X 35MM	4				
31	507113	. BALL BEARING	2				
32	N.P.N.	. SPACER SMALL	1				4
33	N.P.N.	. SPACER LARGE	1				4
34	N.P.N.	. RETAINER RING (72 X 2.5)	1				4
35	N.P.N.	. DEFLECTOR	1				4
36	550671	. KEY (8 X 7 X 28)	1				
37	550786	. SHAFT	1				
38	5001106	. SCREW CAP HEX M6-1.0x10 G8.8 Z050	2				D
NS	561781	. CONNECTOR / WEATHER PACK / PH 3C / BLACK / PED 12010717	1				
NS	561567	. PIN TERMINAL / 20-18 / PED 12089040	3				

From Y-7046 To 3-7940		Date:07/2024	PAGE:Y2-0540-00

FAN CLUTCH ASSY - #550803 - BUS

Item#	Part	Description	XLII 45	XLII MTH40	XLII MTH45	XLII MTH45E	NOTES
NS	561565	. CABLE SEAL / GREEN / PED 15324982	3				
39	550713	. ANGLE	2				A
NS	502744	NUT HEX STO M8-1.25 Z050	4				
NS	500874	WASHER FL 8.4x17.0x1.6 Z050	4				
46	**550965**	**FAN CLUTCH ASSY / ALTERNATIVE PART / FIRST INSTALLATION SEE MI11-26**	1				
. NS	551002	. COOLING RING	1				
. NS	550062	. LOCKING TABS	1				
		A) (EMERGENCY)					
		B) TO FIX FAN BLADE					
		C) TO FIX FAN CLUTCH TO SUPPORT					
		D) EMERGENCY USE ONLY					
		4) NO PARTS NUMBER					

From Y-7046 To 3-7940		Date:07/2024	PAGE:550965
FAN CLUTCH ASSY / ALTERNATIVE PART / FIRST INSTALLATION SEE MI11-26			

FORMER

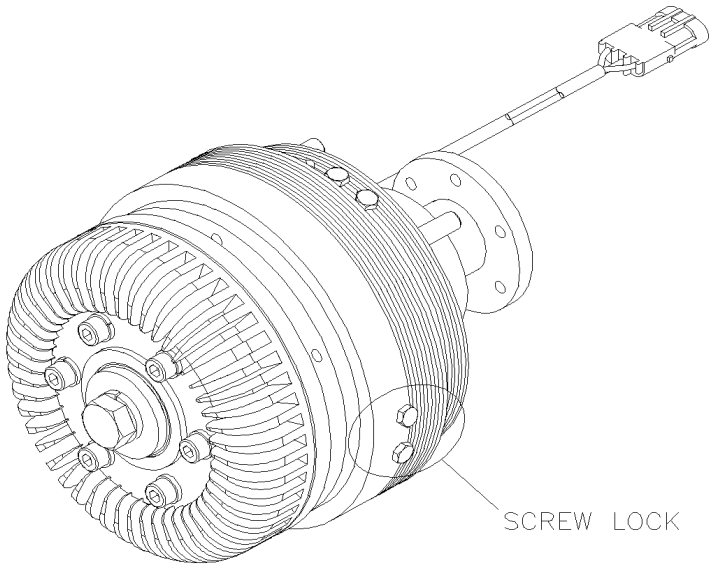

CURRENT

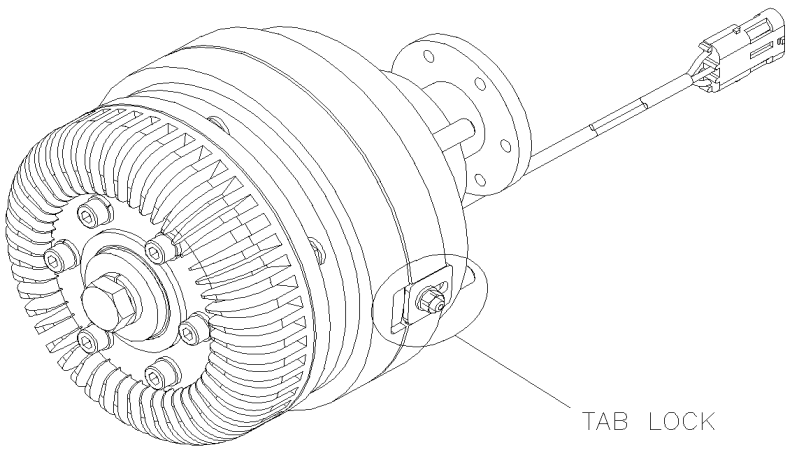

From Y-7046 To 3-7940		Date:07/2024	PAGE:550965

FAN CLUTCH ASSY / ALTERNATIVE PART / FIRST INSTALLATION SEE MI11-26

Item#	Part	Description	XLII 45	XLII MTH40	XLII MTH45	XLII MTH45E	NOTES
1		FORMER WITH SCREW LOCK	1	1	1	1	
2		CURRENT WITH TAB LOCK	1	1	1	1	

From 3-7941 To 3-8164		Date:07/2024	PAGE:Y2-0540-01
FAN CLUTCH ASSY - #550837 - BUS			

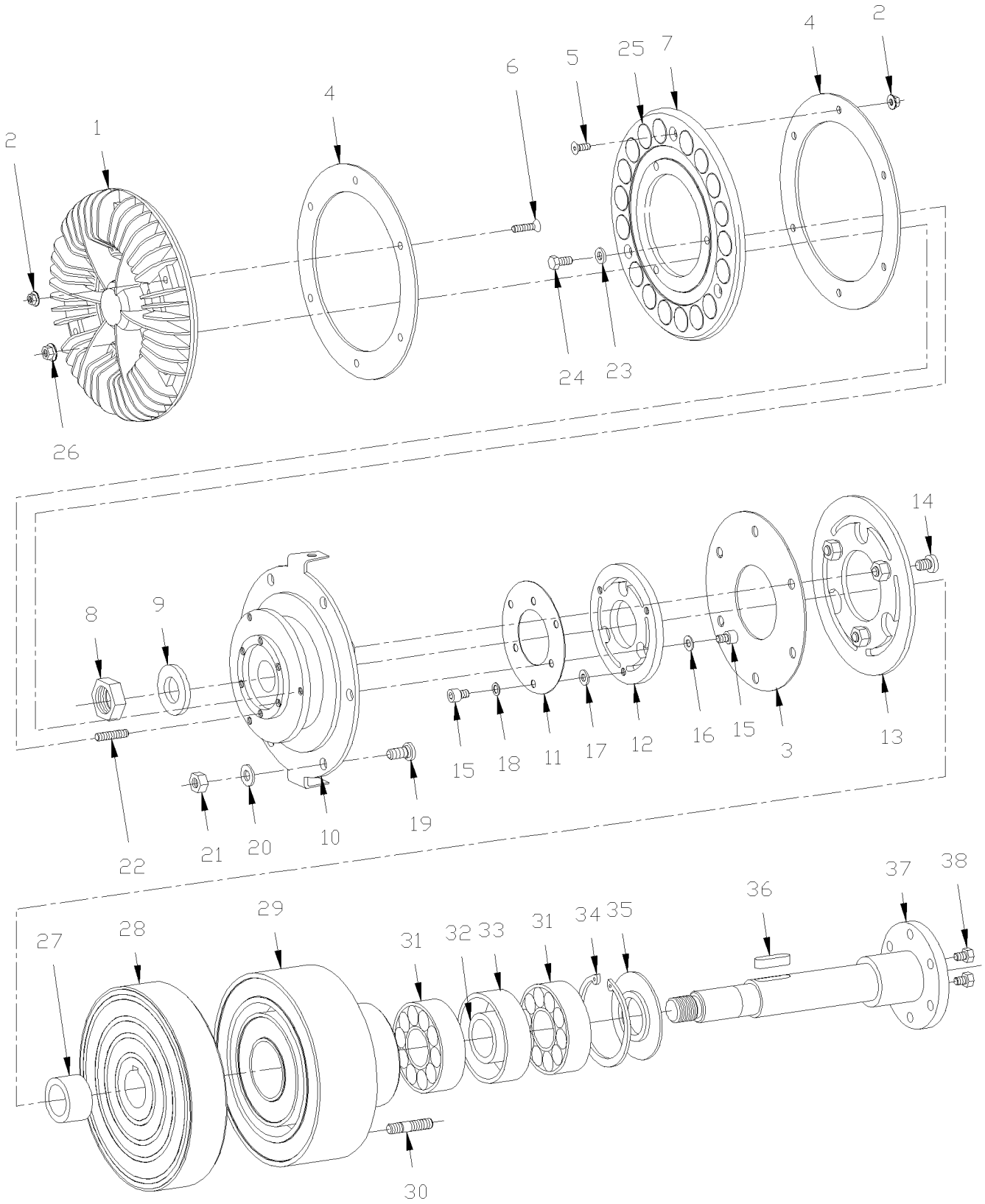

From 3-7941 To 3-8164		Date:07/2024	PAGE:Y2-0540-01

FAN CLUTCH ASSY - #550837 - BUS

Item#	Part	Description	XLII 45	XLII MTH40	XLII MTH45	XLII MTH45E	NOTES
	550837	FAN CLUTCH ASSY /	1				
. NS	550977	. REPAIR KIT	1				
1	550835	. COOLING FAN	1				
2	502782	. NUT HEX NYRT M5-0.8 Z050	9				
3	550667	. SPRING PLATE	1				
4	550659	. DISC	2				
5	502639	. SCREW MA FL PH M5-0.8X12 ZP	3				
6	N.P.N.	. SCREW, MA FL PH ZP M5-0.8 X 25MM	6				4
7	550779	. MAGNET PLATE SUPPORT	1				
8	502767	. NUT HEX JAM M20-1.5 ZP	1				
9	502558	. WASHER FL 21.0x37.0x3.0 G500	1				
10	550848	. FLANGE DRIVEN ASSY W/BEARING	1				
. NS	550664	. . BEARING ASSY	1				
11	550842	. SPRING PLATE	1				
12	550843	. ARMATURE DISC / 1ST SPEED	1				
13	550849	. ARMATURE DISC / 2ND SPEED	1				
14	N.P.N.	. . SOCKET HEAD CAP SCREW, M8-1.25 X 16MM (50-2755)	3				4
15	N.P.N.	. SOCKET HEAD CAP SCREW, M6-1.0 X 8MM (50-01025)	6				4
16	N.P.N.	. WASHER, SHIM .05MM	3				4
17	502573	. WASHER FL 6.4x12.5x1.6 SS	3				
18	502564	. WASHER LO SPT 6.1x11.8x1.6 Z050	3				
19	550669	. STUD M8-1.25 X 19MM	6				
20	500874	. WASHER FL 8.4x17.0x1.6 Z050	6				
21	502744	. NUT HEX STO M8-1.25 Z050	6				
22	N.P.N.	. SET SCREW, M6-1.0 X 20MM	3				4
23	N.P.N.	. WASHER	3				4
24	5001106	. SCREW CAP HEX M6-1.0x10 G8.8 Z050	3				
25	550661	. MAGNET	18				
26	502511	. NUT HEX NYRT M6-1.0 Z050	3				
27	N.P.N.	. SPACER	1				4
28	550776	. ROTOR	1				
29	550777	. MAGNETIC COIL ASSY	1				
30	550788	. STUD M10-1.5 X 35MM	4				
31	507113	. BALL BEARING	2				
32	N.P.N.	. SPACER SMALL	1				4
33	N.P.N.	. SPACER LARGE	1				4
34	N.P.N.	. RETAINER RING (72 X 2.5)	1				4
35	N.P.N.	. DEFLECTOR	1				4
36	550671	. KEY (8 X 7 X 28)	1				
37	550786	. SHAFT	1				
38	5001106	. SCREW CAP HEX M6-1.0x10 G8.8 Z050	4				A
NS	561781	CONNECTOR / WEATHER PACK / PH 3C / BLACK / PED 12010717	1				

From 3-7941 To 3-8164		Date:07/2024	PAGE:Y2-0540-01

FAN CLUTCH ASSY - #550837 - BUS

Item#	Part	Description	XLII 45	XLII MTH40	XLII MTH45	XLII MTH45E	NOTES
NS	561567	PIN TERMINAL / 20-18 / PED 12089040	3				
NS	561565	CABLE SEAL / GREEN / PED 15324982	3				
46	**550965**	**FAN CLUTCH ASSY / ALTERNATIVE PART / FIRST INSTALLATION SEE MI11-26**	1				
. NS	551002	. COOLING RING	1				
. NS	550062	. LOCKING TABS	1				
		A) EMERGENCY USE					
		4) NO PARTS NUMBER					

From 3-7941 To 3-8164		Date:07/2024	PAGE:550965
FAN CLUTCH ASSY / ALTERNATIVE PART / FIRST INSTALLATION SEE MI11-26			

FORMER

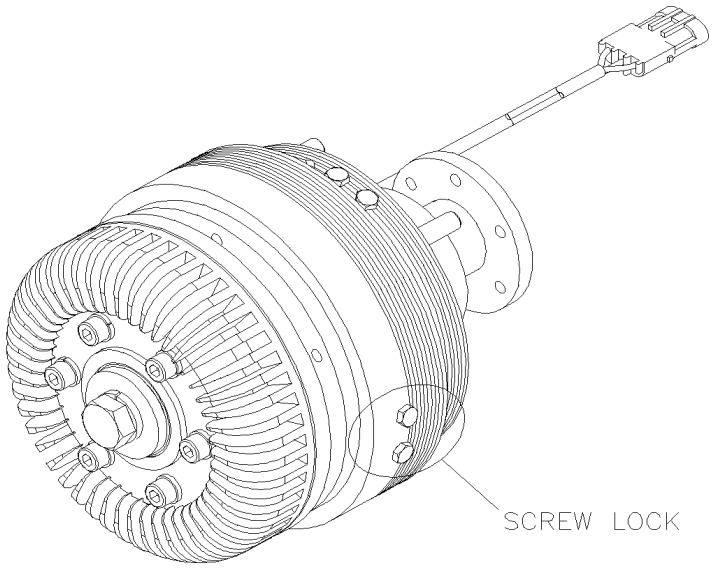

CURRENT

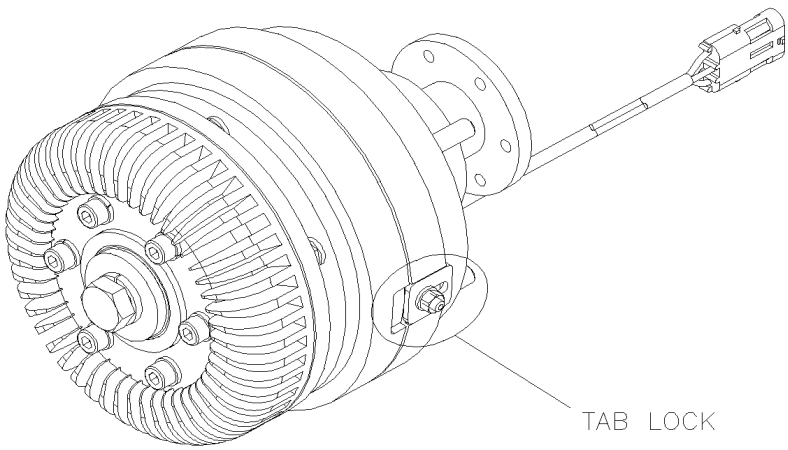

From 3-7941 To 3-8164		Date:07/2024	PAGE:550965

FAN CLUTCH ASSY / ALTERNATIVE PART / FIRST INSTALLATION SEE MI11-26

Item#	Part	Description	XLII 45	XLII MTH40	XLII MTH45	XLII MTH45E	NOTES
1		FORMER WITH SCREW LOCK	1	1	1	1	
2		CURRENT WITH TAB LOCK	1	1	1	1	

From 4-8165 To 6-8805		Date:07/2024	PAGE:Y2-0540-02
FAN CLUTCH ASSY - #550836 - BUS, MTH 40' & MTH-45E			

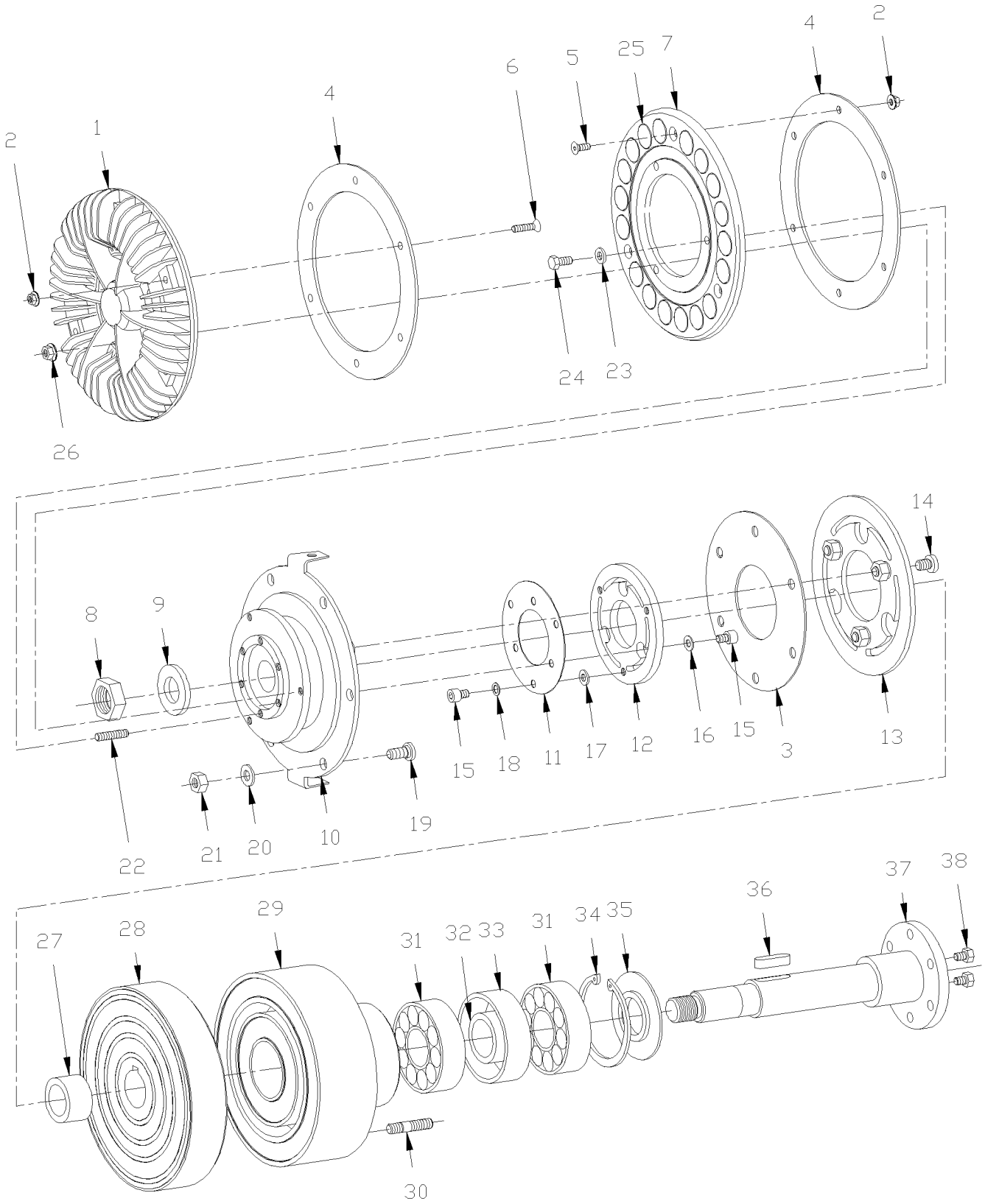

From 4-8165 To 6-8805		Date:07/2024	PAGE:Y2-0540-02

FAN CLUTCH ASSY - #550836 - BUS, MTH 40' & MTH-45E

Item#	Part	Description	XLII 45	XLII MTH40	XLII MTH45	XLII MTH45E	NOTES
	550836	FAN CLUTCH ASSY /	1	1		1	
1	550835	. COOLING FAN	1	1		1	
2	502782	. NUT HEX NYRT M5-0.8 Z050	9	9		9	
3	550667	. SPRING PLATE	1	1		1	
4	550659	. DISC	2	2		2	
5	502639	. SCREW MA FL PH M5-0.8X12 ZP	3	3		3	
6	N.P.N.	. SCREW, MA FL PH ZP M5-0.8 X 25MM	6	6		6	4
7	550779	. MAGNET PLATE SUPPORT	1	1		1	
8	502767	. NUT HEX JAM M20-1.5 ZP	1	1		1	
9	502558	. WASHER FL 21.0x37.0x3.0 G500	1	1		1	
10	550841	. FLANGE DRIVEN ASSY W/BEARING	1	1		1	
11	550842	. SPRING PLATE	1	1		1	
12	550843	. ARMATURE DISC / 1ST SPEED	1	1		1	
13	550783	. ARMATURE DISC / 2ND SPEED	1	1		1	
14	N.P.N.	. . SOCKET HEAD CAP SCREW, M8-1.25 X 16MM (50-2755)	3	3		3	4
15	N.P.N.	. SOCKET HEAD CAP SCREW, M6-1.0 X 8MM (50-01025)	6	6		6	4
16	N.P.N.	. WASHER, SHIM .05MM	3	3		3	4
17	502573	. WASHER FL 6.4x12.5x1.6 SS	3	3		3	
18	502564	. WASHER LO SPT 6.1x11.8x1.6 Z050	3	3		3	
19	550669	. STUD M8-1.25 X 19MM	6	6		6	
20	500874	. WASHER FL 8.4x17.0x1.6 Z050	6	6		6	
21	502744	. NUT HEX STO M8-1.25 Z050	6	6		6	
22	N.P.N.	. SET SCREW, M6-1.0 X 20MM	3	3		3	4
23	N.P.N.	. WASHER	3	3		3	4
24	5001106	. SCREW CAP HEX M6-1.0x10 G8.8 Z050	3	3		3	
25	550661	. MAGNET	18	18		18	
26	502511	. NUT HEX NYRT M6-1.0 Z050	3	3		3	
27	N.P.N.	. SPACER	1	1		1	4
28	550776	. ROTOR	1	1		1	
29	550777	. MAGNETIC COIL ASSY	1	1		1	
30	550788	. STUD M10-1.5 X 35MM	4	4		4	
31	507113	. BALL BEARING	2	2		2	
32	N.P.N.	. SPACER SMALL	1	1		1	4
33	N.P.N.	. SPACER LARGE	1	1		1	4
34	N.P.N.	. RETAINER RING (72 X 2.5)	1	1		1	4
35	N.P.N.	. DEFLECTOR	1	1		1	4
36	550671	. KEY (8 X 7 X 28)	1	1		1	
37	550786	. SHAFT	1	1		1	
38	5001106	. SCREW CAP HEX M6-1.0x10 G8.8 Z050	4	4		4	A
NS	561781	CONNECTOR / WEATHER PACK / PH 3C / BLACK / PED 12010717	1	1		1	
NS	561567	PIN TERMINAL / 20-18 / PED 12089040	3	3		3	
NS	561565	CABLE SEAL / GREEN / PED 15324982	3	3		3	

From 4-8165 To 6-8805		Date:07/2024	PAGE:Y2-0540-02

FAN CLUTCH ASSY - #550836 - BUS, MTH 40' & MTH-45E

Item#	Part	Description	XLII 45	XLII MTH40	XLII MTH45	XLII MTH45E	NOTES
51	**550965**	**FAN CLUTCH ASSY / ALTERNATIVE PART / FIRST INSTALLATION SEE MI11-26**	1	1		1	
. NS	551002	. COOLING RING	1	1		1	
. NS	550062	. LOCKING TABS	1	1		1	
		A) EMERGENCY USE					
		4) NO PARTS NUMBER					

From 4-8165 To 6-8805		Date:07/2024	PAGE:550965
FAN CLUTCH ASSY / ALTERNATIVE PART / FIRST INSTALLATION SEE MI11-26			

FORMER

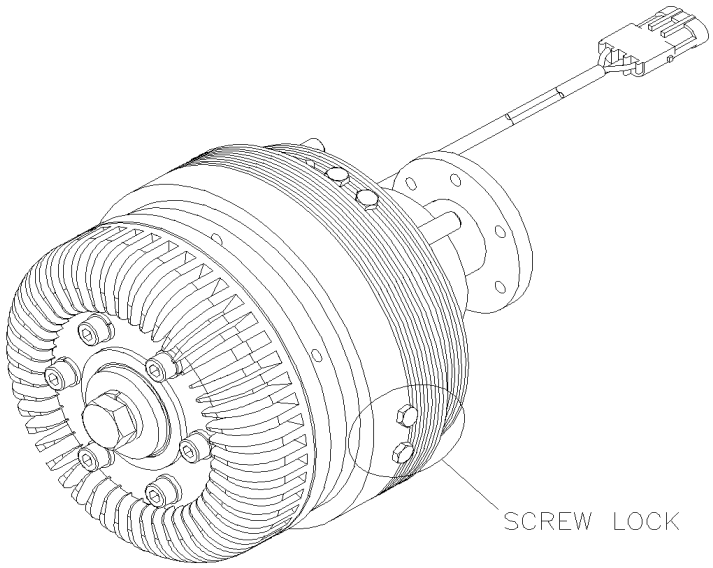

CURRENT

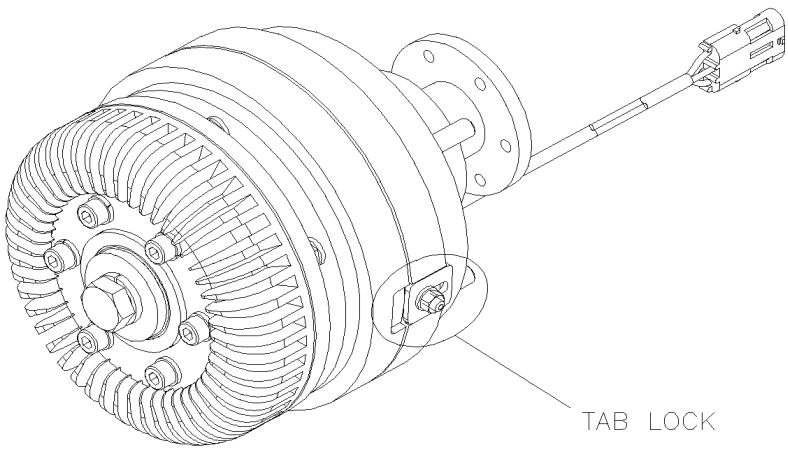

From 4-8165 To 6-8805		Date:07/2024	PAGE:550965

FAN CLUTCH ASSY / ALTERNATIVE PART / FIRST INSTALLATION SEE MI11-26

Item#	Part	Description	XLII 45	XLII MTH40	XLII MTH45	XLII MTH45E	NOTES
1		FORMER WITH SCREW LOCK	1	1	1	1	
2		CURRENT WITH TAB LOCK	1	1	1	1	

From 6-8806 To 8-9339		Date:07/2024	PAGE:Y2-0540-03
FAN CLUTCH ASSY - #550839 - BUS, MTH 40' & MTH-45E			

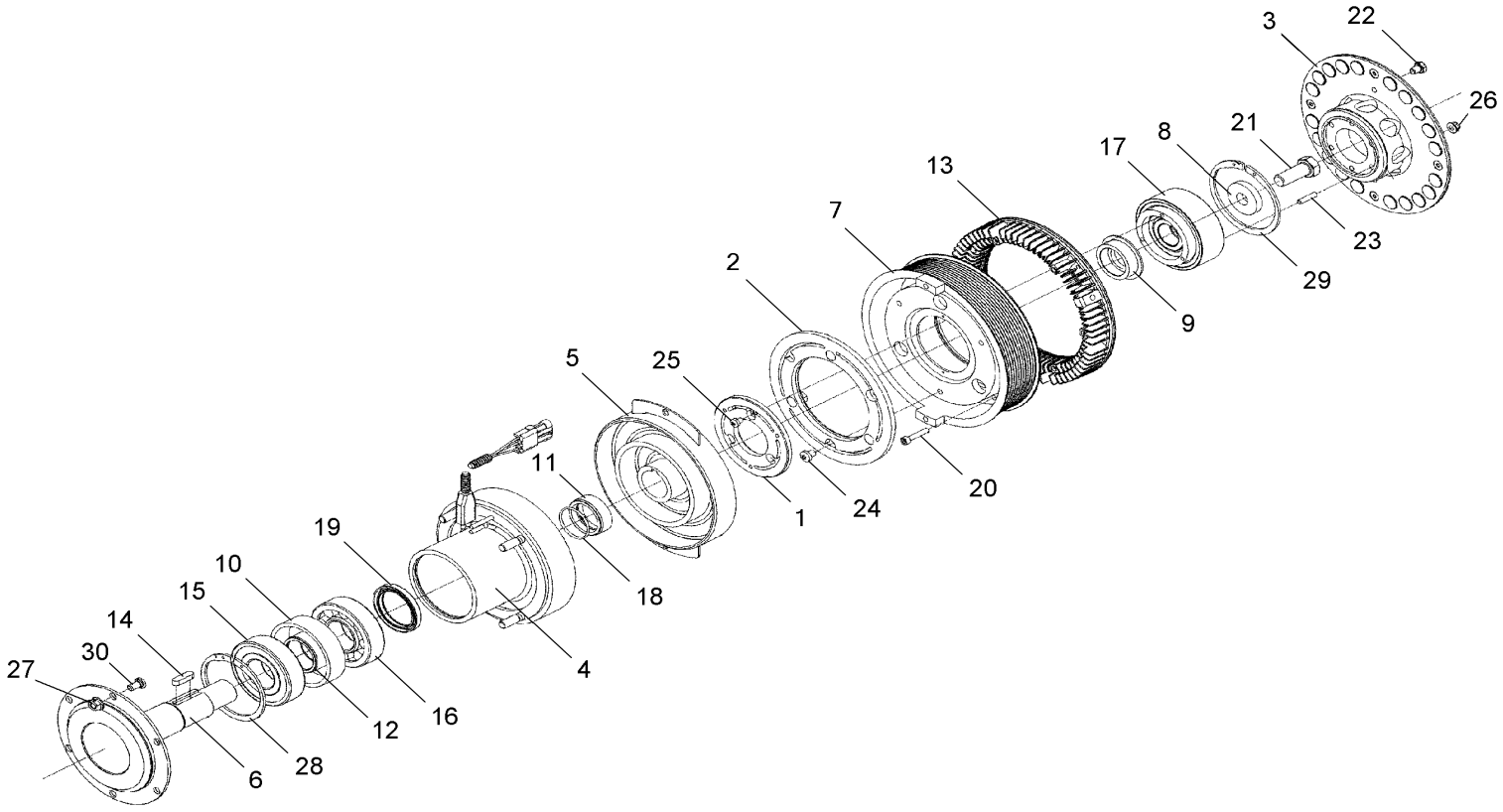

From 6-8806 To 8-9339		Date:07/2024	PAGE:Y2-0540-03

FAN CLUTCH ASSY - #550839 - BUS, MTH 40' & MTH-45E

Item#	Part	Description	XLII 45	XLII MTH40	XLII MTH45	XLII MTH45E	NOTES
	550839	FAN CLUTCH ASSY /	1	1		1	
. NS	IS-EB0140 A	. SEE INSTRUCTION SHEET	1	1		1	
1		. ARMATURE DISC	1	1		1	
2		. ARMATURE DISC	1	1		1	
3	550882	. MAGNET RING ASSY	1	1		1	
4	550883	. MAGNETIC COIL ASSY	1	1		1	
5	550884	. ROTOR	1	1		1	
6	550885	. SHAFT	1	1		1	
7	550890	. PULLEY ASSY WBEARING & DISC	1	1		1	A
8	550887	. WASHER	1	1		1	
9	550888	. BUSHING FLANGE	1	1		1	
10	N.P.N.	. SPACER	1	1		1	4
11	550893	. BUSHING W/GROOVE	1	1		1	
12	N.P.N.	. SPACER	1	1		1	4
13	550889	. COOLING RING	1	1		1	
14	550671	. KEY (8 X 7 X 28)	1	1		1	
15	550895	. BALL BEARING	1	1		1	
16	550894	. ROLLER BEARING	1	1		1	
17	550886	. BEARING ASSY	1	1		1	
18	550891	. O-RING 40 X 2.5	1	1		1	
19	550892	. SEAL 50 X 65 X 8	1	1		1	
20	N.P.N.	. SCREW CAP HEX S.ZP MG X 30 G8.8	6	6		6	4
21	N.P.N.	. SCREW CAP HEX M16 X 40 G10.9	1	1		1	4
22	500069	. SCREW CAP HEX M8-1.25x16 G10.9 DP	2	2		2	B
23	N.S.S.	. INSERT	3	3		3	1
24	N.S.S.	. INSERT	3	3		3	1
25		. SCREW M6 X 8	6	6		6	
26	502744	. NUT HEX STO M8-1.25 Z050	4	4		4	
27	500680	. NUT HEX STO M10-1.5 Z050	6	6		6	
28	N.P.N.	. RETAINER RING (90 X 3)	1	1		1	4
29	N.P.N.	. RETAINER RING (100 X 3)	1	1		1	4
30	N.P.N.	. INSERT	4	4		4	4
32	**550966**	**FAN CLUTCH ASSY / ALTERNATIVE PART**	1	1		1	
. NS	550062	. LOCKING TABS	1	1		1	
32	**550057**	**FAN CLUTCH ASSY / ALTERNATIVE PART / SEE MI16-08**	1	1		1	
. NS	550062	. LOCKING TABS	1	1		1	
34	IS17908	550057 FAN CLUTCH FIRST INSTALLATION / WITH LONG FAN DRIVE WITH LONG FAN DRIVE	1	1		1	
. NS	**550057**	**. FAN CLUTCH ASSY / ALTERNATIVE PART / SEE MI16-08**	1	1		1	
. . NS	550062	. . LOCKING TABS	1	1		1	
. NS	506064	. MULTI V-BELT / 12 RIB 83 1/2" (2121)	1	1		1	

From 6-8806 To 8-9339		Date:07/2024	PAGE:Y2-0540-03

FAN CLUTCH ASSY - #550839 - BUS, MTH 40' & MTH-45E

Item#	Part	Description	XLII 45	XLII MTH40	XLII MTH45	XLII MTH45E	NOTES
. NS	5001758	. NUT HEX STO M10-1.5 N500	4	4		4	
. NS	500897	. WASHER FL .437x1.000x.083 N500	4	4		4	
. NS	IS-17908	. SEE INSTRUCTION SHEET	1	1		1	
34	**550057**	**FAN CLUTCH ASSY / ALTERNATIVE PART / SEE MI16-08 WITH SHORT FAN DRIVE To 3-8164**	1	1		1	
. NS	550062	. LOCKING TABS To 3-8164	1	1		1	
34	506060	MULTI V-BELT / 12 RIB 58.39" (1483MM) WITH SHORT FAN DRIVE To 3-8164	1	1		1	
34	IS17909	550057 FAN CLUTCH FIRST INSTALLATION / WITH SHORT FAN DRIVE WITH SHORT FAN DRIVE From 4-8165	1	1		1	
. NS	**550057**	**. FAN CLUTCH ASSY / ALTERNATIVE PART / SEE MI16-08 From 4-8165**	1	1		1	
. . NS	550062	. . LOCKING TABS From 4-8165	1	1		1	
. NS	5002112	. MULTI V-BELT / 12 RIB 62.40" (1585MM) From 4-8165	2	2		2	
. NS	502692	. NUT HEXF STO M8-1.25 Z050 From 4-8165	3	3		3	
. NS	502891	. SCREW CRG M8-1.25x40 G8.8 Z050 From 4-8165	3	3		3	
. NS	500874	. WASHER FL 8.4x17.0x1.6 Z050 From 4-8165	3	3		3	
. NS	502644	. WASHER FL 10.5x30.0x2.5 Z050 From 4-8165	4	4		4	
. NS	5001758	. NUT HEX STO M10-1.5 N500 From 4-8165	4	4		4	
. NS	5001654	. WASHER FL 6.4x17.0x3.0 SS From 4-8165	6	6		6	
. NS	502843	. SCREW CAP HEX M6-1.0x45 G8.8 N500 From 4-8165	1	1		1	
. NS	502621	. NUT HEX STO M6-1.0 Z050 From 4-8165	1	1		1	
. NS	IS-17909	. SEE INSTRUCTION SHEET From 4-8165	1	1		1	
		A) INCLUDES ITEMS #1, 2, 17, 23, 24, 25 & 29					
		B) USE IN EMERGENCY ONLY					
		1) NOT SOLD SEPARATELY					
		4) NO PARTS NUMBER					

From 6-8806 To 8-9339		Date:07/2024	PAGE:550966
FAN CLUTCH ASSY / ALTERNATIVE PART			

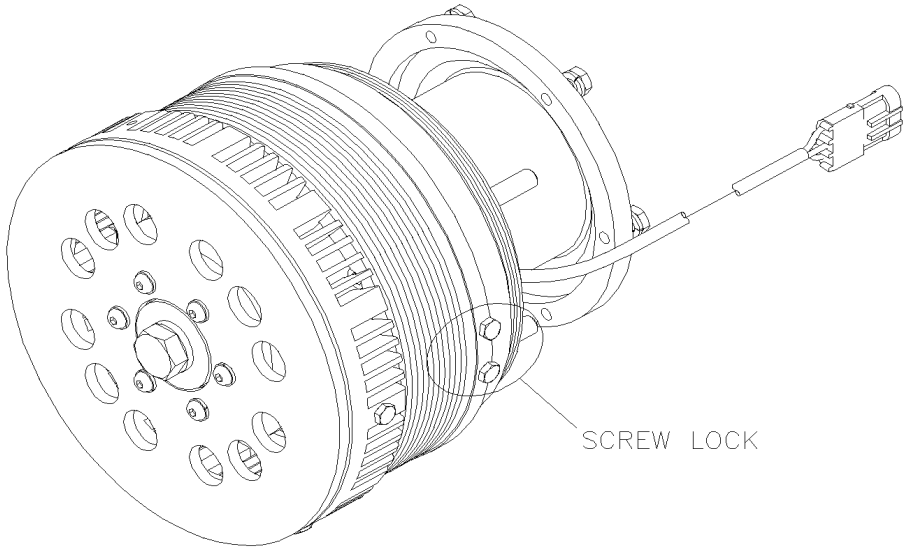

From 6-8806 To 8-9339		Date:07/2024	PAGE:550966

FAN CLUTCH ASSY / ALTERNATIVE PART

Item#	Part	Description	XLII 45	XLII MTH40	XLII MTH45	XLII MTH45E	NOTES
1		FORMER WITH SCREW LOCK	1	1	1	1	

From 6-8806 To 8-9339		Date:07/2024	PAGE:550057
FAN CLUTCH ASSY / ALTERNATIVE PART / SEE MI16-08			

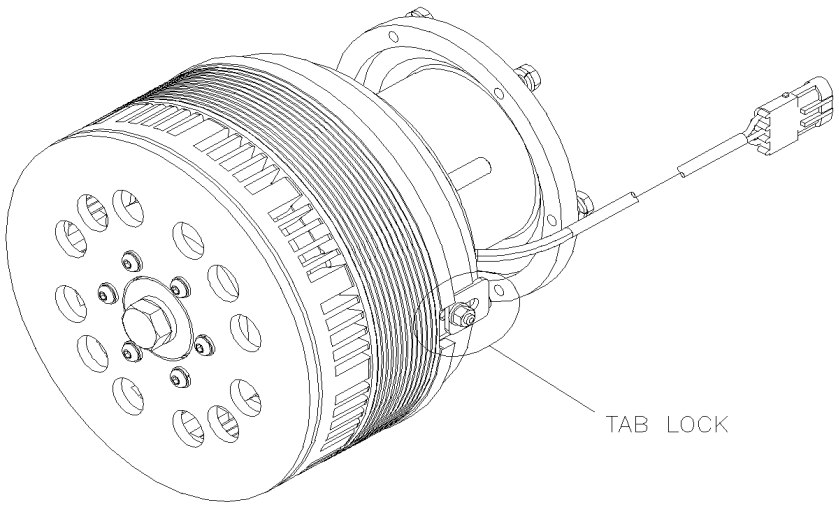

From 6-8806 To 8-9339		Date:07/2024	PAGE:550057

FAN CLUTCH ASSY / ALTERNATIVE PART / SEE MI16-08

Item#	Part	Description	XLII 45	XLII MTH40	XLII MTH45	XLII MTH45E	NOTES
2		WITH TAB LOCK	1	1	1	1	

From Y-7046 To 2-7837		Date:07/2024	PAGE:Y2-0540-50
FAN CLUTCH ASSY - #550802 - MTH			

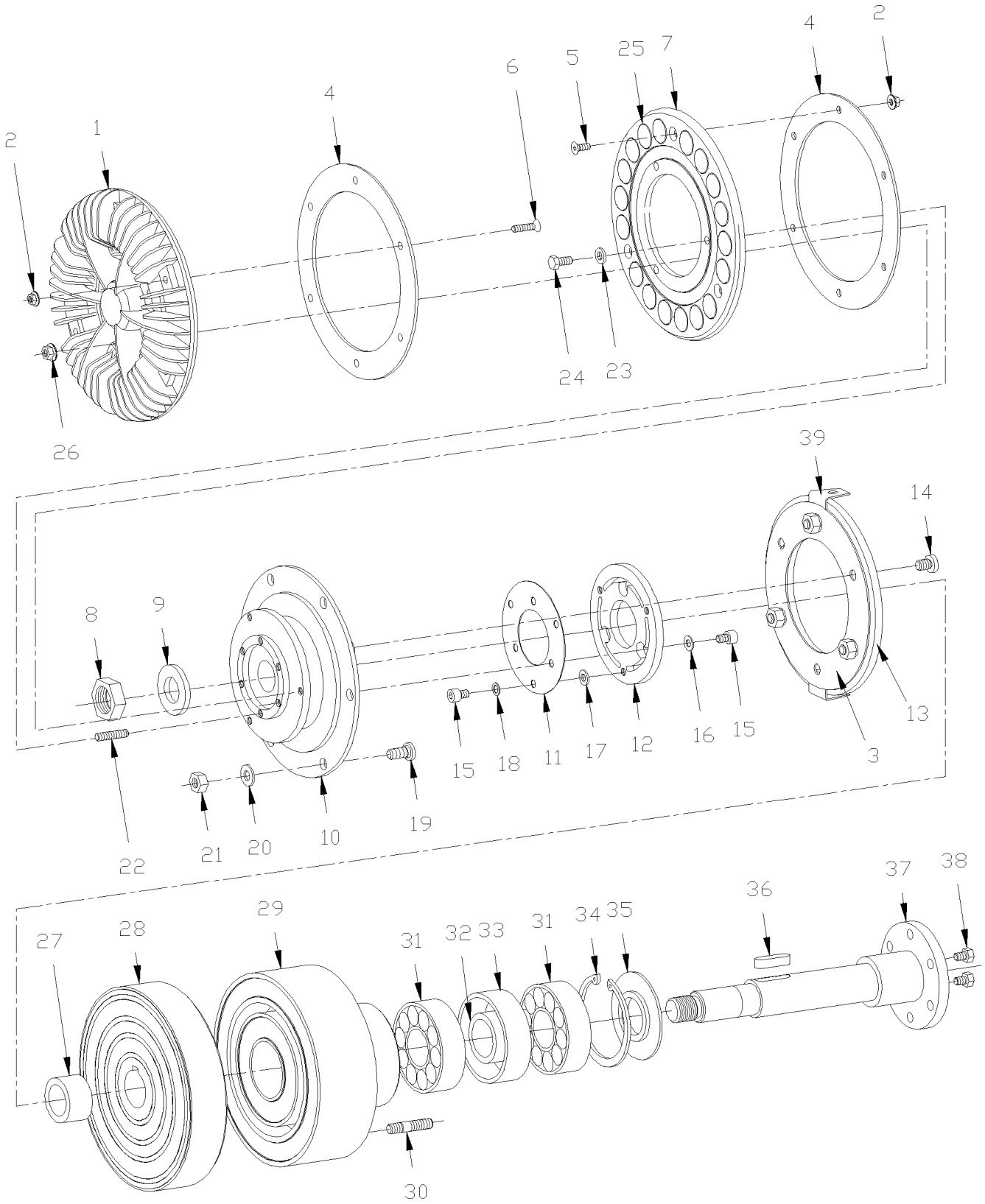

From Y-7046 To 2-7837		Date:07/2024	PAGE:Y2-0540-50

FAN CLUTCH ASSY - #550802 - MTH

Item#	Part	Description	XLII 45	XLII MTH40	XLII MTH45	XLII MTH45E	NOTES
	550802	FAN CLUTCH ASSY /		1	1	1	
1	550774	. COOLING FAN		1	1	1	
2	502782	. NUT HEX NYRT M5-0.8 Z050		9	9	9	
3	550667	. . SPRING PLATE		1	1	1	
4	550659	. DISC		2	2	2	
5	502639	. SCREW MA FL PH M5-0.8X12 ZP		3	3	3	
6	N.P.N.	. SCREW, MA FL PH ZP M5-0.8 X 25MM		6	6	6	4
7	550779	. MAGNET PLATE SUPPORT		1	1	1	
8	502767	. NUT HEX JAM M20-1.5 ZP		1	1	1	
9	502558	. WASHER FL 21.0x37.0x3.0 G500		1	1	1	
10	550780	. FLANGE DRIVEN ASSY W/BEARING		1	1	1	
. NS	550664	. . BEARING ASSY		1	1	1	
11	550781	. SPRING PLATE		1	1	1	
12	550782	. ARMATURE DISC / 1ST SPEED		1	1	1	
13	550783	. ARMATURE DISC / 2ND SPEED		1	1	1	
14	N.P.N.	. . SOCKET HEAD CAP SCREW, M8-1.25 X 16MM (50-2755)		3	3	3	4
15	N.P.N.	. SOCKET HEAD CAP SCREW, M6-1.0 X 8MM (50-01025)		6	6	6	4
16	N.P.N.	. WASHER, SHIM .05MM		3	3	3	4
17	502573	. WASHER FL 6.4x12.5x1.6 SS		3	3	3	
18	502564	. WASHER LO SPT 6.1x11.8x1.6 Z050		3	3	3	
19	550669	. STUD M8-1.25 X 19MM		6	6	6	
20	500874	. WASHER FL 8.4x17.0x1.6 Z050		6	6	6	
21	502744	. NUT HEX STO M8-1.25 Z050		6	6	6	
22	N.P.N.	. SET SCREW, M6-1.0 X 20MM		3	3	3	4
23	N.P.N.	. WASHER		3	3	3	4
24	5001106	. SCREW CAP HEX M6-1.0x10 G8.8 Z050		3	3	3	
25	550661	. MAGNET		18	18	18	
26	502511	. NUT HEX NYRT M6-1.0 Z050		3	3	3	
27	N.P.N.	. SPACER		1	1	1	4
28	550776	. ROTOR		1	1	1	
29	550777	. MAGNETIC COIL ASSY		1	1	1	
30	550788	. STUD M10-1.5 X 35MM		4	4	4	
31	507113	. BALL BEARING		2	2	2	
32	N.P.N.	. SPACER SMALL		1	1	1	4
33	N.P.N.	. SPACER LARGE		1	1	1	4
34	N.P.N.	. RETAINER RING (72 X 2.5)		1	1	1	4
35	N.P.N.	. DEFLECTOR		1	1	1	4
36	550671	. KEY (8 X 7 X 28)		1	1	1	
37	550786	. SHAFT		1	1	1	
38	5001106	. SCREW CAP HEX M6-1.0x10 G8.8 Z050		2	2	2	A
39	550713	. ANGLE		2	2	2	A
NS	561781	CONNECTOR / WEATHER PACK / PH 3C / BLACK / PED 12010717		1	1	1	

From Y-7046 To 2-7837		Date:07/2024	PAGE:Y2-0540-50

FAN CLUTCH ASSY - #550802 - MTH

Item#	Part	Description	XLII 45	XLII MTH40	XLII MTH45	XLII MTH45E	NOTES
NS	561567	PIN TERMINAL / 20-18 / PED 12089040		3	3	3	
NS	561565	CABLE SEAL / GREEN / PED 15324982		3	3	3	
51	**550965**	**FAN CLUTCH ASSY / ALTERNATIVE PART / FIRST INSTALLATION SEE MI11-26**		1	1	1	
. NS	551002	. COOLING RING		1	1	1	
. NS	550062	. LOCKING TABS		1	1	1	
		A) EMERGENCY USE					
		4) NO PARTS NUMBER					

From Y-7046 To 2-7837		Date:07/2024	PAGE:550965
FAN CLUTCH ASSY / ALTERNATIVE PART / FIRST INSTALLATION SEE MI11-26			

FORMER

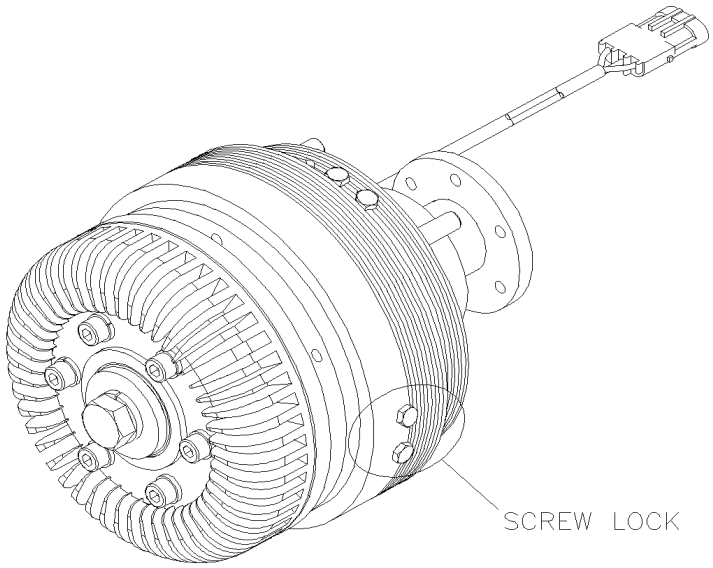

CURRENT

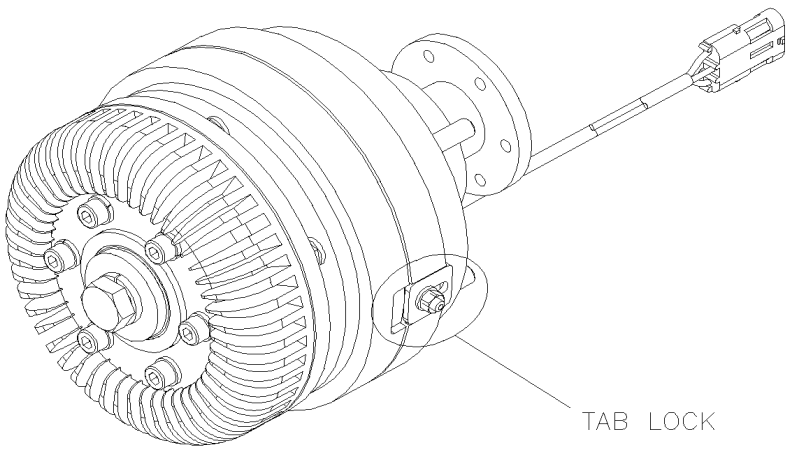

From Y-7046 To 2-7837		Date:07/2024	PAGE:550965

FAN CLUTCH ASSY / ALTERNATIVE PART / FIRST INSTALLATION SEE MI11-26

Item#	Part	Description	XLII 45	XLII MTH40	XLII MTH45	XLII MTH45E	NOTES
1		FORMER WITH SCREW LOCK	1	1	1	1	
2		CURRENT WITH TAB LOCK	1	1	1	1	

From 2-7838 To 3-8164		Date:07/2024	PAGE:Y2-0540-51
FAN CLUTCH ASSY - #550836 - MTH			

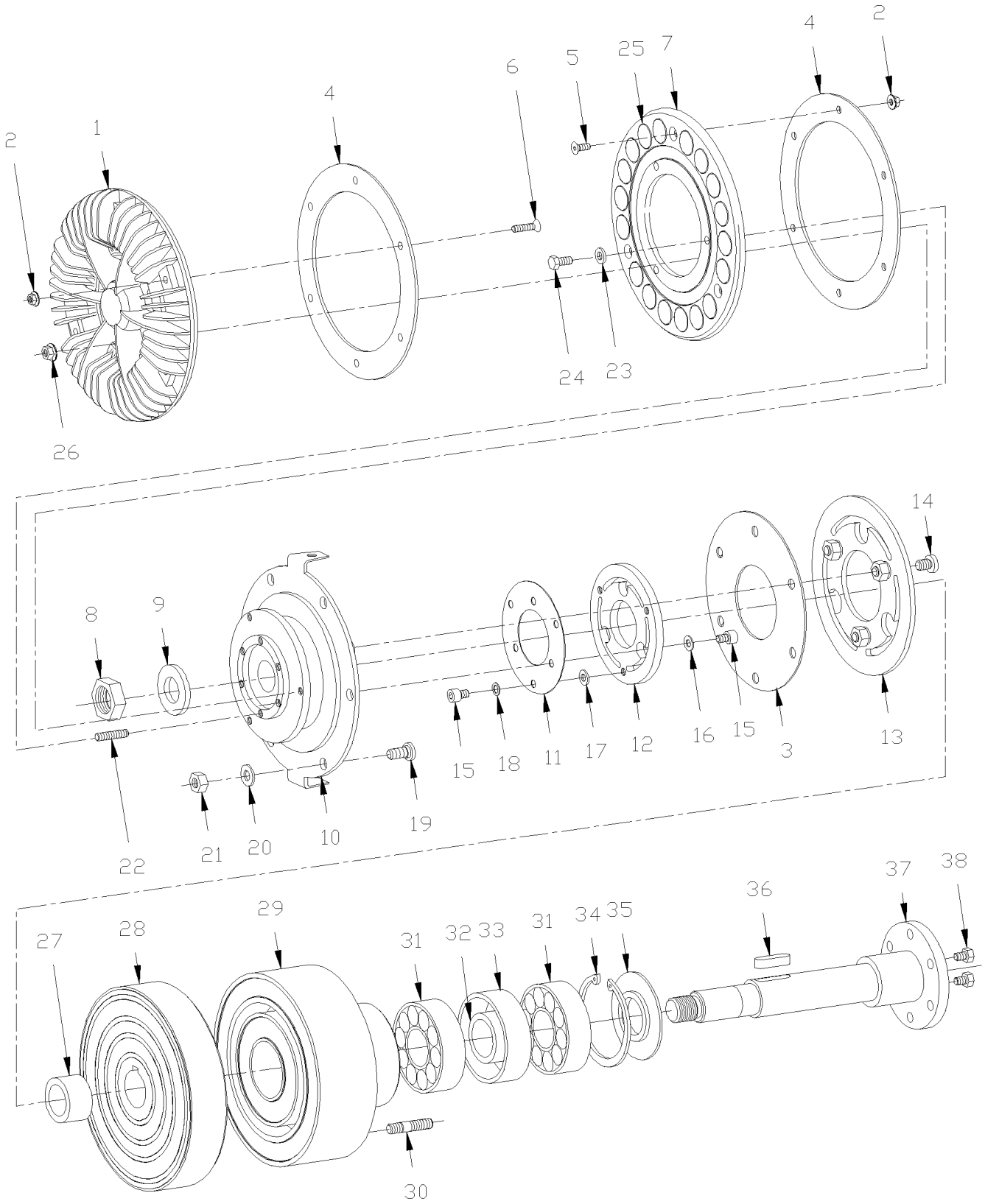

From 2-7838 To 3-8164		Date:07/2024	PAGE:Y2-0540-51

FAN CLUTCH ASSY - #550836 - MTH

Item#	Part	Description	XLII 45	XLII MTH40	XLII MTH45	XLII MTH45E	NOTES
	550836	FAN CLUTCH ASSY /		1	1	1	
1	550835	. COOLING FAN		1	1	1	
2	502782	. NUT HEX NYRT M5-0.8 Z050		9	9	9	
3	550667	. SPRING PLATE		1	1	1	
4	550659	. DISC		2	2	2	
5	502639	. SCREW MA FL PH M5-0.8X12 ZP		3	3	3	
6	N.P.N.	. SCREW, MA FL PH ZP M5-0.8 X 25MM		6	6	6	4
7	550779	. MAGNET PLATE SUPPORT		1	1	1	
8	502767	. NUT HEX JAM M20-1.5 ZP		1	1	1	
9	502558	. WASHER FL 21.0x37.0x3.0 G500		1	1	1	
10	550841	. FLANGE DRIVEN ASSY W/BEARING		1	1	1	
11	550842	. SPRING PLATE		1	1	1	
12	550843	. ARMATURE DISC / 1ST SPEED		1	1	1	
13	550783	. ARMATURE DISC / 2ND SPEED		1	1	1	
14	N.P.N.	. . SOCKET HEAD CAP SCREW, M8-1.25 X 16MM (50-2755)		3	3	3	4
15	N.P.N.	. SOCKET HEAD CAP SCREW, M6-1.0 X 8MM (50-01025)		6	6	6	4
16	N.P.N.	. WASHER, SHIM .05MM		3	3	3	4
17	502573	. WASHER FL 6.4x12.5x1.6 SS		3	3	3	
18	502564	. WASHER LO SPT 6.1x11.8x1.6 Z050		3	3	3	
19	550669	. STUD M8-1.25 X 19MM		6	6	6	
20	500874	. WASHER FL 8.4x17.0x1.6 Z050		6	6	6	
21	502744	. NUT HEX STO M8-1.25 Z050		6	6	6	
22	N.P.N.	. SET SCREW, M6-1.0 X 20MM		3	3	3	4
23	N.P.N.	. WASHER		3	3	3	4
24	5001106	. SCREW CAP HEX M6-1.0x10 G8.8 Z050		3	3	3	
25	550661	. MAGNET		18	18	18	
26	502511	. NUT HEX NYRT M6-1.0 Z050		3	3	3	
27	N.P.N.	. SPACER		1	1	1	4
28	550776	. ROTOR		1	1	1	
29	550777	. MAGNETIC COIL ASSY		1	1	1	
30	550788	. STUD M10-1.5 X 35MM		4	4	4	
31	507113	. BALL BEARING		2	2	2	
32	N.P.N.	. SPACER SMALL		1	1	1	4
33	N.P.N.	. SPACER LARGE		1	1	1	4
34	N.P.N.	. RETAINER RING (72 X 2.5)		1	1	1	4
35	N.P.N.	. DEFLECTOR		1	1	1	4
36	550671	. KEY (8 X 7 X 28)		1	1	1	
37	550786	. SHAFT		1	1	1	
38	5001106	. SCREW CAP HEX M6-1.0x10 G8.8 Z050		4	4	4	A
NS	561781	CONNECTOR / WEATHER PACK / PH 3C / BLACK / PED 12010717		1	1	1	
NS	561567	PIN TERMINAL / 20-18 / PED 12089040		3	3	3	
NS	561565	CABLE SEAL / GREEN / PED 15324982		3	3	3	

From 2-7838 To 3-8164		Date:07/2024	PAGE:Y2-0540-51

FAN CLUTCH ASSY - #550836 - MTH

Item#	Part	Description	XLII 45	XLII MTH40	XLII MTH45	XLII MTH45E	NOTES
46	**550965**	**FAN CLUTCH ASSY / ALTERNATIVE PART / FIRST INSTALLATION SEE MI11-26**		1	1	1	
. NS	551002	. COOLING RING		1	1	1	
. NS	550062	. LOCKING TABS		1	1	1	
		A) EMERGENCY USE					
		4) NO PARTS NUMBER					

From 2-7838 To 3-8164		Date:07/2024	PAGE:550965
FAN CLUTCH ASSY / ALTERNATIVE PART / FIRST INSTALLATION SEE MI11-26			

FORMER

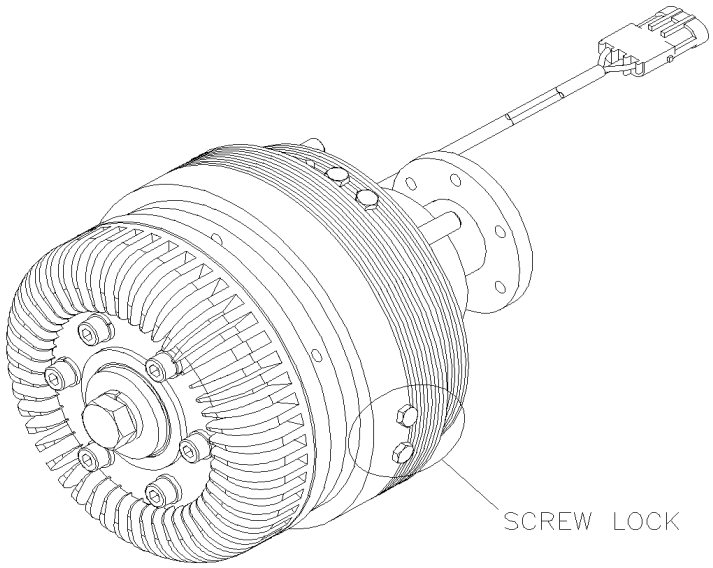

CURRENT

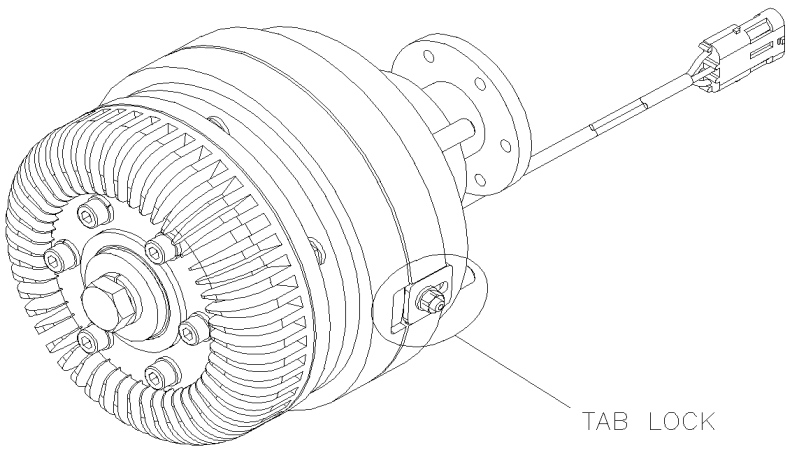

From 2-7838 To 3-8164		Date:07/2024	PAGE:550965

FAN CLUTCH ASSY / ALTERNATIVE PART / FIRST INSTALLATION SEE MI11-26

Item#	Part	Description	XLII 45	XLII MTH40	XLII MTH45	XLII MTH45E	NOTES
1		FORMER WITH SCREW LOCK	1	1	1	1	
2		CURRENT WITH TAB LOCK	1	1	1	1	

From 4-8165 To 8-9339		Date:07/2024	PAGE:Y2-0540-52
FAN CLUTCH ASSY - #550839 - MTH 45'			

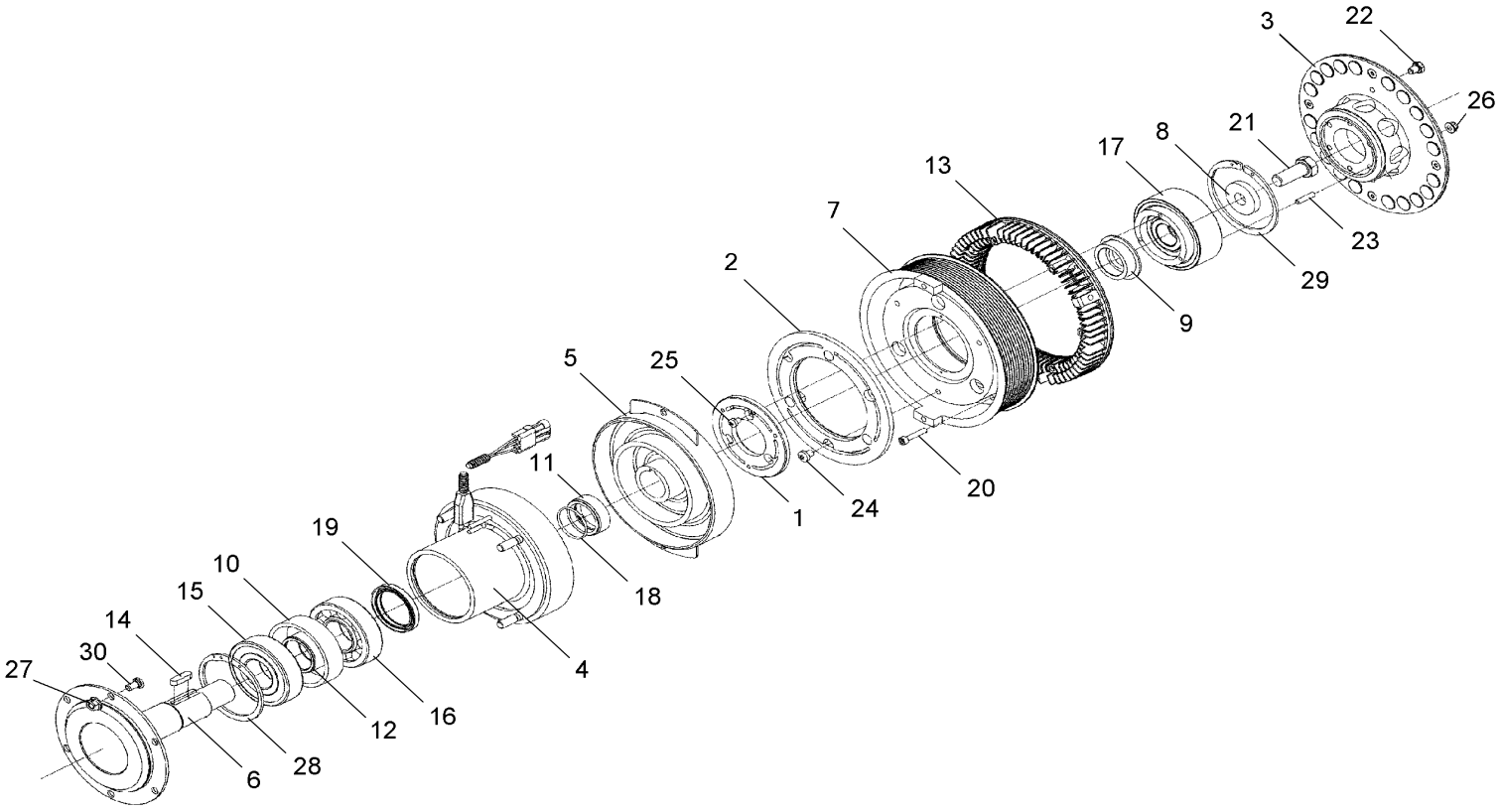

From 4-8165 To 8-9339		Date:07/2024	PAGE:Y2-0540-52

FAN CLUTCH ASSY - #550839 - MTH 45'

Item#	Part	Description	XLII 45	XLII MTH40	XLII MTH45	XLII MTH45E	NOTES
	550839	FAN CLUTCH ASSY /			1		
. NS	IS-EB0140 A	. SEE INSTRUCTION SHEET			1		
1		. ARMATURE DISC			1		
2		. ARMATURE DISC			1		
3	550882	. MAGNET RING ASSY			1		
4	550883	. MAGNETIC COIL ASSY			1		
5	550884	. ROTOR			1		
6	550885	. SHAFT			1		
7	550890	. PULLEY ASSY WBEARING & DISC			1		A
8	550887	. WASHER			1		
9	550888	. BUSHING FLANGE			1		
10	N.P.N.	. SPACER			1		4
11	550893	. BUSHING W/GROOVE			1		
12	N.P.N.	. SPACER			1		4
13	550889	. COOLING RING			1		
14	550671	. KEY (8 X 7 X 28)			1		
15	550895	. BALL BEARING			1		
16	550894	. ROLLER BEARING			1		
17	550886	. BEARING ASSY			1		
18	550891	. O-RING 40 X 2.5			1		
19	550892	. SEAL 50 X 65 X 8			1		
20	N.P.N.	. SCREW CAP HEX S.ZP MG X 30 G8.8			6		4
21	N.P.N.	. SCREW CAP HEX M16 X 40 G10.9			1		4
22	500069	. SCREW CAP HEX M8-1.25x16 G10.9 DP			2		B
23	N.S.S.	. INSERT			3		1
24	N.S.S.	. INSERT			3		1
25		. SCREW M6 X 8			6		
26	502744	. NUT HEX STO M8-1.25 Z050			4		
27	500680	. NUT HEX STO M10-1.5 Z050			6		
28	N.P.N.	. RETAINER RING (90 X 3)			1		4
29	N.P.N.	. RETAINER RING (100 X 3)			1		4
30	N.P.N.	. INSERT			4		4
32	**550966**	**FAN CLUTCH ASSY / ALTERNATIVE PART**			1		
. NS	550062	. LOCKING TABS			1		
32	**550057**	**FAN CLUTCH ASSY / ALTERNATIVE PART / SEE MI16-08**			1		
. NS	550062	. LOCKING TABS			1		
33	IS17908	550057 FAN CLUTCH FIRST INSTALLATION / WITH LONG FAN DRIVE			1		
. NS	**550057**	**. FAN CLUTCH ASSY / ALTERNATIVE PART / SEE MI16-08**			1		
. . NS	550062	. . LOCKING TABS			1		
. NS	506064	. MULTI V-BELT / 12 RIB 83 1/2" (2121)			1		
. NS	5001758	. NUT HEX STO M10-1.5 N500			4		

From 4-8165 To 8-9339		Date:07/2024	PAGE:Y2-0540-52

FAN CLUTCH ASSY - #550839 - MTH 45'

Item#	Part	Description	XLII 45	XLII MTH40	XLII MTH45	XLII MTH45E	NOTES
. NS	500897	. WASHER FL .437x1.000x.083 N500			4		
. NS	IS-17908	. SEE INSTRUCTION SHEET			1		
34	IS17909	550057 FAN CLUTCH FIRST INSTALLATION / WITH SHORT FAN DRIVE			1		
. NS	**550057**	**. FAN CLUTCH ASSY / ALTERNATIVE PART / SEE MI16-08**			1		
. . NS	550062	. . LOCKING TABS			1		
. NS	5002112	. MULTI V-BELT / 12 RIB 62.40" (1585MM)			2		
. NS	502692	. NUT HEXF STO M8-1.25 Z050			3		
. NS	502891	. SCREW CRG M8-1.25x40 G8.8 Z050			3		
. NS	500874	. WASHER FL 8.4x17.0x1.6 Z050			3		
. NS	502644	. WASHER FL 10.5x30.0x2.5 Z050			4		
. NS	5001758	. NUT HEX STO M10-1.5 N500			4		
. NS	5001654	. WASHER FL 6.4x17.0x3.0 SS			6		
. NS	502843	. SCREW CAP HEX M6-1.0x45 G8.8 N500			1		
. NS	502621	. NUT HEX STO M6-1.0 Z050			1		
. NS	IS-17909	. SEE INSTRUCTION SHEET			1		
		A) INCLUDES ITEMS #1, 2, 17, 23, 24, 25 & 29					
		B) USE IN EMERGENCY ONLY					
		1) NOT SOLD SEPARATELY					
		4) NO PARTS NUMBER					

From 4-8165 To 8-9339		Date:07/2024	PAGE:550966
FAN CLUTCH ASSY / ALTERNATIVE PART			

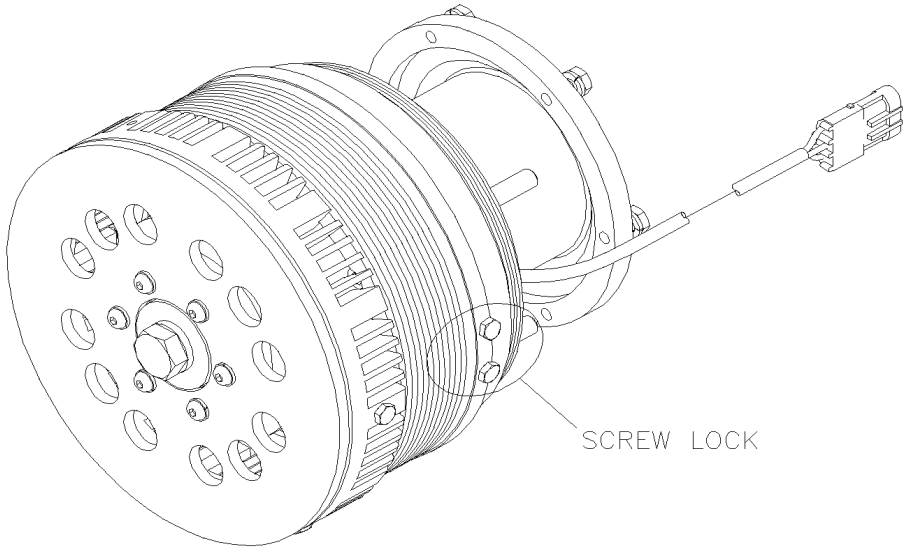

From 4-8165 To 8-9339		Date:07/2024	PAGE:550966

FAN CLUTCH ASSY / ALTERNATIVE PART

Item#	Part	Description	XLII 45	XLII MTH40	XLII MTH45	XLII MTH45E	NOTES
1		FORMER WITH SCREW LOCK	1	1	1	1	

From 4-8165 To 8-9339		Date:07/2024	PAGE:550057
FAN CLUTCH ASSY / ALTERNATIVE PART / SEE MI16-08			

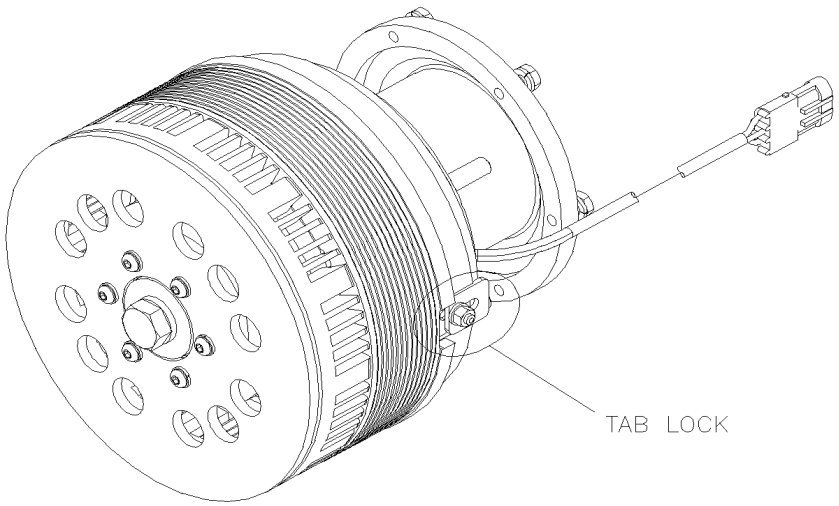

From 4-8165 To 8-9339		Date:07/2024	PAGE:550057

FAN CLUTCH ASSY / ALTERNATIVE PART / SEE MI16-08

Item#	Part	Description	XLII 45	XLII MTH40	XLII MTH45	XLII MTH45E	NOTES
2		WITH TAB LOCK	1	1	1	1	

		Date:07/2024	Y2-06
ELECTRICAL			

Wiring Harness 5
Cable & Harness – Under Floor 75
Front End Cables & Harness 80
Cable & Harness – W.C.L. 85
Cable & Harness Rear End 87
Tachograph – Installation 115

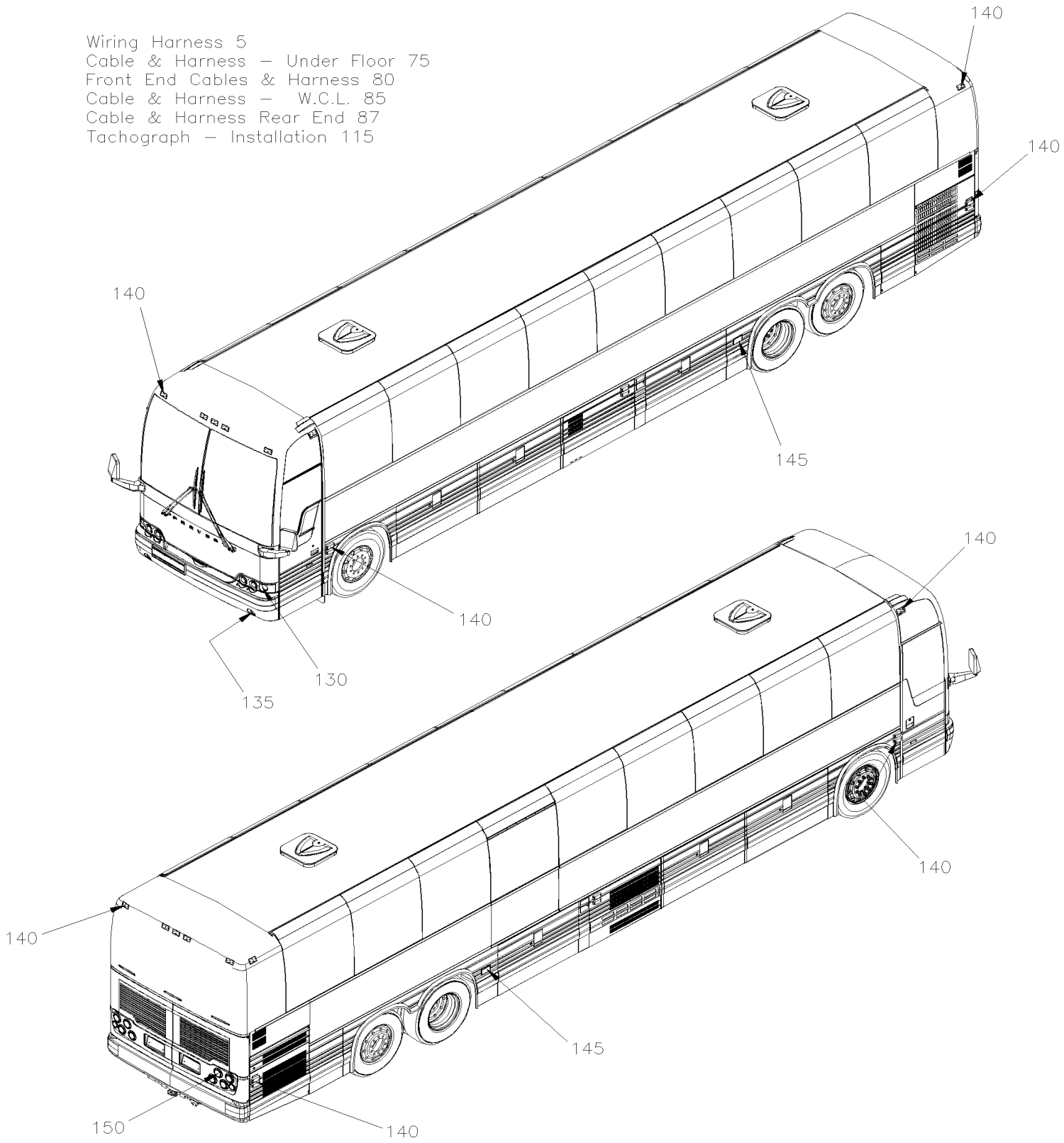

		Date:07/2024	Y2-06
ELECTRICAL			

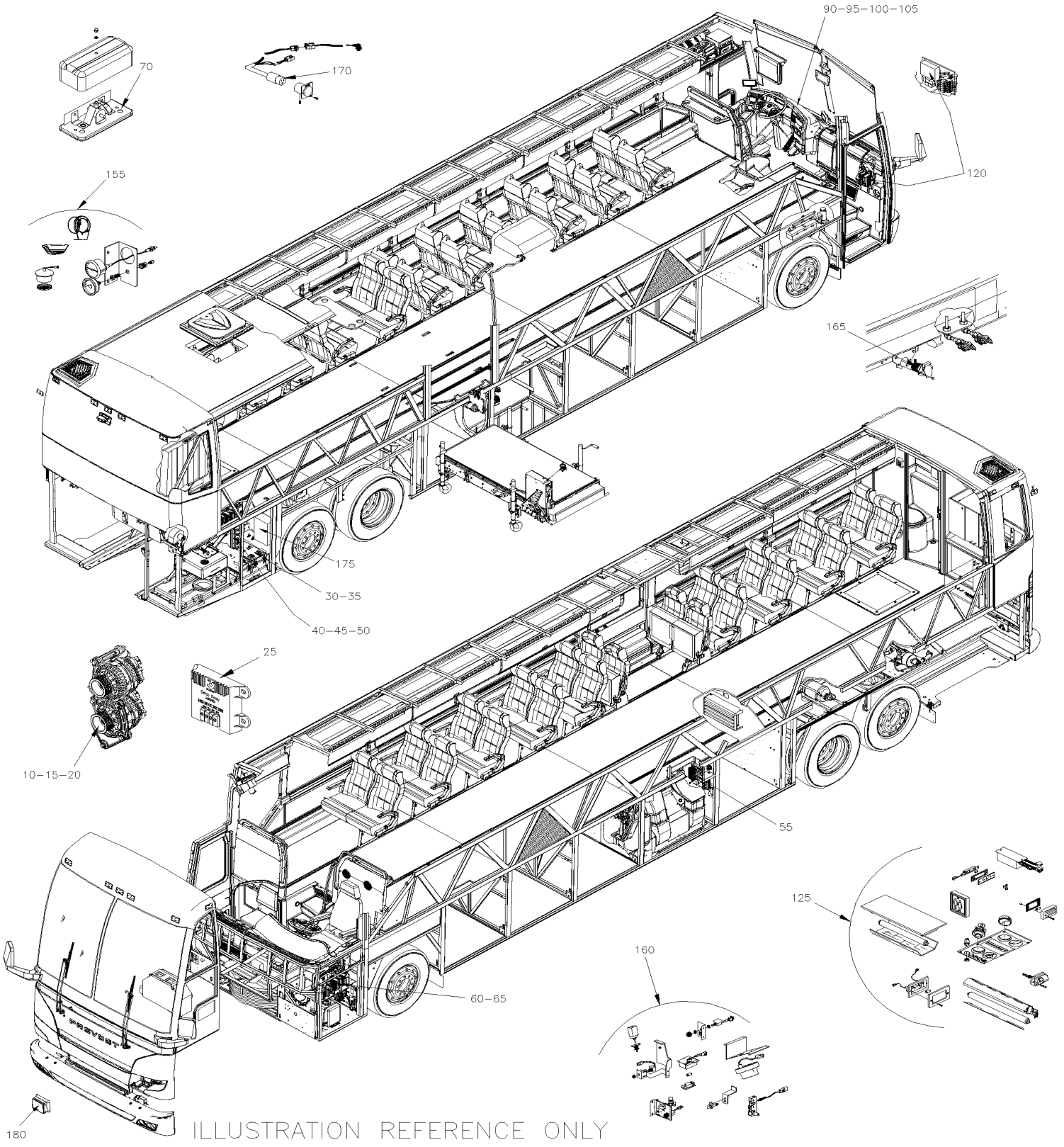

		Date:07/2024	Y2-06

ELECTRICAL

Item#	Part	Description	XLII 45	XLII MTH40	XLII MTH45	XLII MTH45E	NOTES
5	Y2-0600-00	WIRING HARNESS - BUS 45' DIAGRAM D-060938 From Y-7046 To 6-8906					
5	Y2-0600-50	WIRING HARNESS - MTH 40' & MTH 45' DIAGRAM D-060921 From Y-7046 To 7-9095					
5	Y2-0600-52	WIRING HARNESS - MTH W/MUX DIAGRAM D-061080 From 7-9096 To 8-9339					
10	Y2-0605-00	ALTERNATOR 24V/140 AMPS / "BOSCH" From Y-7046 To 8-9339					
10	Y2-0605-51	ALTERNATOR 24V/270 AMPS / "DELCO" #562235 From Y-7046 To 8-9339					
10	Y2-0605-52	ALTERNATOR 12V/300 AMPS / "DELCO" #562355 From Y-7046 To 8-9339					
15	Y2-0610-00	ALTERNATOR MOUNTING / "BOSCH" WITH DETROIT S-60 From Y-7046 To 3-8164					
15	Y2-0610-01	ALTERNATOR MOUNTING / "BOSCH" WITH DETROIT S-60 From 4-8165 To 8-9339					
20	Y2-0610-50	ALTERNATOR MOUNTING / "DELCO" WITH DETROIT S-60 From Y-7046 To 3-8164					
20	Y2-0610-51	ALTERNATOR MOUNTING / 12V & 24V - MTH From Y-7046 To 8-9339					
20	Y2-0610-52	ALTERNATOR MOUNTING / 12V & 24V - MTH / GEARBOX INSTAL From Y-7046 To 8-9339					
20	Y2-0610-54	ALTERNATOR MOUNTING / "BOSCH" - 24V/140A / GEARBOX INSTAL From 6-8864 To 8-9339					
20	Y2-0610-55	ALTERNATOR MOUNTING / "DELCO" WITH DETROIT S-60 From 4-8165 To 8-9339					
25	Y2-0610-60	VOLTAGE REGULATOR - 24 VOLTS W/270 AMPS From Y-7046 To 8-9339					
30	Y2-0615-00	BATTERIES INSTALLATION - BUS From Y-7046 To 6-8906					
30	Y2-0615-10	BATTERIES COMPARTMENT PANEL From Y-7046 To 6-8906					
35	Y2-0615-50	BATTERIES INSTALLATION - MTH40' & MTH-45' ENT From Y-7046 To 7-9095					
35	Y2-0615-51	BATTERIES INSTALLATION - MTH WITH / MUX From 7-9096 To 8-9339					
35	Y2-0615-60	BATTERIES INSTALLATION - MTH-45' From Y-7046 To 7-9095					
40	Y2-0616-00	JUNCTION BOX COMPONENTS, RELAY & BREAKER From Y-7046 To 7-9095					
40	Y2-0616-01	JUNCTION BOX COMPONENTS, RELAY & BREAKER / MUX From 7-9096 To 8-9339					
45	Y2-0616-10	BREAKER PANEL - BUS From Y-7046 To 6-8906					
45	Y2-0616-50	BREAKER PANEL - MTH From Y-7046 To 7-9095					
50	Y2-0620-00	REAR JUNCTION BOX ASSY From Y-7046 To 7-9095					
50	Y2-0620-05	REAR JUNCTION BOX FAN - INSTALLATION From 7-9096 To 8-9339					
50	Y2-0620-50	REAR JUNCTION BOX ASSY - MTH WITH MUX (D380244) From 7-9096 To 8-9339					
55	Y2-0621-00	A/C JUNCTION BOX ASSY From Y-7046 To 7-9095					
55	Y2-0621-10	CABLE & HARNESS EVAPO. & CONDENSOR - INST From Y-7046 To 7-9095					
55	Y2-0621-50	A/C CONDENSOR MOTOR RELAY From 7-9096 To 8-9339					
60	Y2-0625-00	FRONT JUNCTION PANEL From Y-7046 To 7-9095					
60	Y2-0625-01	FRONT JUNCTION PANEL / MUX From 7-9096 To 8-9339					
65	Y2-0625-10	FRONT JUNCTION BOX - INSTALLATION From Y-7046 To 7-9095					
65	Y2-0625-11	FRONT JUNCTION BOX - INSTALLATION From 7-9096 To 8-9339					
70	Y2-0628-00	CHIME BELL - INSTALLATION From Y-7046 To 6-8906					
75	Y2-0630-00	CABLE & HARNESS - UNDER FLOOR - BUS From Y-7046 To 6-8906					
75	Y2-0630-50	CABLE & HARNESS - UNDER FLOOR - MTH-40' & MTH-45' ENT From Y-7046 To 7-9095					
75	Y2-0630-51	CABLE & HARNESS - UNDER FLOOR - MTH WITH / MUX From 7-9096 To 8-9339					
75	Y2-0630-60	CABLE & HARNESS - UNDER FLOOR - MTH-45' From Y-7046 To 7-9095					
80	Y2-0640-00	CABLE & HARNESS - FRONT END INSTALLATION - BUS From Y-7046 To 6-8906					
80	Y2-0640-50	CABLE & HARNESS - FRONT END INSTALLATION - MTH From Y-7046 To 7-9095					
80	Y2-0640-51	CABLE & HARNESS - FRONT END INSTALLATION - MTH / MUX // D061083 From 7-9096 To 8-9339					
85	Y2-0640-80	CABLE & HARNESS - W.C.L. From Y-7046 To 6-8906					

		Date:07/2024	Y2-06

ELECTRICAL

Item#	Part	Description	XLII 45	XLII MTH40	XLII MTH45	XLII MTH45E	NOTES
87	Y2-0641-00	CABLE & HARNESS - REAR END INSTALLATION - BUS From Y-7046 To 6-8906					
90	Y2-0645-00	SWITCHES L.H. CONSOLE - BUS From Y-7046 To 6-8906					
90	Y2-0645-05	SWITCHES L.H. CONSOLE - MTH From Y-7046 To 8-9339					
95	Y2-0645-10	L.H. DASHBOARD PANEL From Y-7046 To 8-9339					
100	Y2-0645-20	CENTER DASHBOARD PANEL From Y-7046 To 8-9339					
105	Y2-0645-30	R.H. DASHBOARD PANEL From Y-7046 To 8-9339					
115	Y2-0650-10	TACHOGRAPH - INSTALLATION From Y-7046 To 6-8906					
120	Y2-0650-50	KEYLESS MODULE From Y-7046 To 7-9095					
125	Y2-0655-00	INTERIOR LIGHTING From Y-7046 To 8-9339					
130	Y2-0660-00	HEADLAMP & FRONT DIRECTIONAL LAMPS RECTANGULAR "HALOGENE" From Y-7046 To 4-8358					
130	Y2-0660-01	HEADLAMP & FRONT DIRECTIONAL LAMPS ROUND "HALOGENE" & "XENON" From 5-8359 To 8-9339					
135	Y2-0661-00	FOG LAMP From Y-7046 To 4-8358					
135	Y2-0661-01	FOG LAMP From 5-8359 To 8-9339					
140	Y2-0662-00	CLEARANCE & MARKER LIGHT From Y-7046 To 8-9339					
145	Y2-0663-00	DOCK & CORNERING LIGHT From Y-7046 To 8-9339					
150	Y2-0664-00	REAR EXTERIOR LIGHTS & PLATE HOLDER From Y-7046 To 3-8164					
150	Y2-0664-01	REAR EXTERIOR LIGHTS & PLATE HOLDER From 4-8165 To 8-9339					
155	Y2-0665-00	ENGINE COMPARTMENT - ELECTRIC COMPONENTS From Y-7046 To 8-9339					
160	Y2-0665-10	SWITCHES, LIGHTS, AJAR - UNDER FLOOR From Y-7046 To 8-9339					
165	Y2-0665-20	CABLE TRAILER - INSTALLATION - BUS From Y-7046 To 6-8906					
170	Y2-0666-00	BLOCK HEATER RECEPTACLE From Y-7046 To 8-9339					
175	Y2-0670-10	BATTERIES CHARGER - INSTALLATION From Y-7046 To 6-8906					
180	Y2-0675-00	SYSTEM - "VORAD" From Y-7046 To 8-9339					

From Y-7046 To 6-8906		Date:07/2024	PAGE:Y2-0600-00

WIRING HARNESS - BUS 45' DIAGRAM D-060938

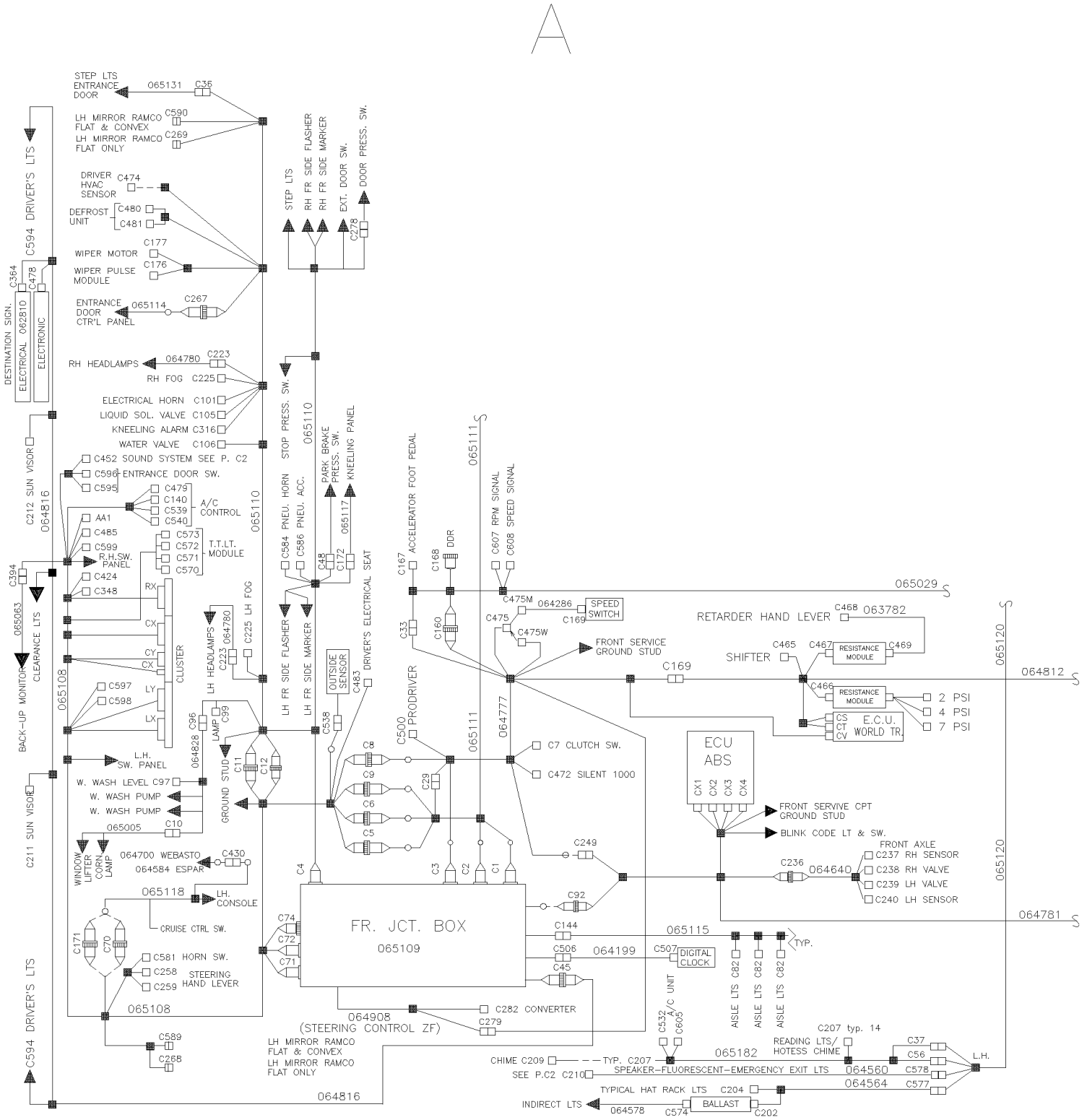

From Y-7046 To 6-8906		Date:07/2024	PAGE:Y2-0600-00

WIRING HARNESS - BUS 45' DIAGRAM D-060938

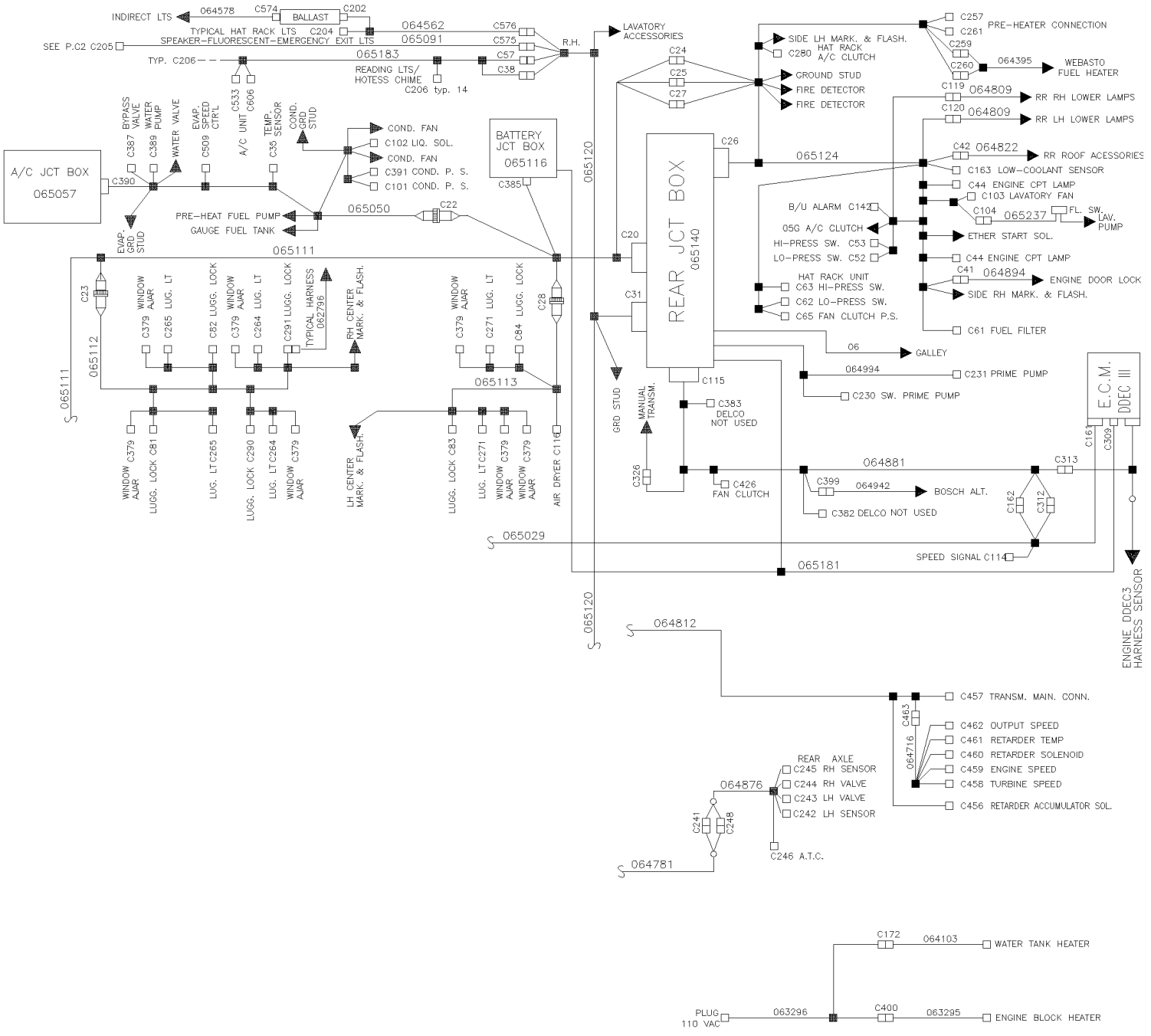

From Y-7046 To 6-8906		Date:07/2024	PAGE:Y2-0600-00

WIRING HARNESS - BUS 45' DIAGRAM D-060938

Item#	Part	Description	XLII 45	XLII MTH40	XLII MTH45	XLII MTH45E	NOTES
		IN BATTERIES COMPARTMENT					
1	063592	CABLE ASSY / B - TO GROUND	1				
1	064255	CABLE ASSY / B - TO GROUND	1				
2	062371	CABLE ASSY / B + TO B +	2				
3	061180	CABLE ASSY / B - TO B -	2				D
3	063903	CABLE ASSY / B + TO B -	1				
4	061036	CABLE ASSY / B - TO B -	2				
5	063591	CABLE ASSY / RELAY BATTERY & BATTERY #24	1				
5	064256	CABLE ASSY / RELAY BATTERY & BATTERY #24	1				D
6	063595	CABLE ASSY / TO BOOSTER BLOCK #24	1				
7	063588	CABLE ASSY / #0VA	1				
7	065819	CABLE ASSY / #0VA	1				
7	063897	CABLE ASSY / #0VA	1				D
7	065821	CABLE ASSY / #0VA	1				D
8	063636	CABLE ASSY / #12VA	1				
8	065825	WIRING HARNESS	1				
8	063898	CABLE ASSY / #12VA	1				D
8	065822	CABLE ASSY / #12VA	1				D
9	064046	CABLE ASSY / #24VA	1				
9	065826	CABLE ASSY #24VA	1				
9	064257	CABLE ASSY #24VA	1				D
9	065824	CABLE ASSY #24VA	1				D
10	064047	CABLE ASSY / BATTERY BOOSTER BLOCK / #0	1				
11	064045	CABLE ASSY #12P	1				
11	064258	CABLE ASSY / W/8D BATTERIES #12	1				D
12	065116	WIRING HARNESS, BATTERIES COMPARTMENT ACCES	1				
13	063911	CABLE ASSY / #12	1				
14	064042	CABLE ASSY #24E	1				
15	063999	CABLE ASSY #101	1				
17	064740	CABLE ASSY W/ALTERNATOR # 102-2/0	2				
18	062214	CABLE ASSY # 0C	1				
19	062212	CABLE ASSY # 0B	1				
20	062849	CABLE ASSY # 0-8	1				
22	063403	CABLE ASSY / #90	1				
24	065088	CABLE ASSY #102	1				
25	064044	CABLE ASSY / #00A	1				
25	063908	CABLE ASSY / #00A	1				D

From Y-7046 To 6-8906		Date:07/2024	PAGE:Y2-0600-00

WIRING HARNESS - BUS 45' DIAGRAM D-060938

Item#	Part	Description	XLII 45	XLII MTH40	XLII MTH45	XLII MTH45E	NOTES
		INSIDE BATTERIES JUNCTION BOX					
31	065116	WIRING HARNESS, BATTERIES COMPARTMENT ACCES	1				
31	065345	WIRING HARNESS, BATTERIES COMPARTMENT ACCES	1				
31	065336	WIRING HARNESS, W.C.L.	1				
32	065344	CABLE ASSY / W.C.L. ACCESSORIES DOOR	1				
33	065916	CABLE ASSY / W.C.L. ACCESSORIES DOOR	1				
33	066468	CABLE ASSY / W.C.L. ACCESSORIES DOOR	1				
34	065343	WIRING HARNESS INTERFACE RICON	1				
34	065917	WIRING HARNESS INTERFACE RICON	1				
34	066107	CABLE ASSY / POWER / W.C.L. "RICON"	1				
34	066307	CABLE ASSY / POWER / W.C.L. "RICON"	1				
35	065857	CABLE ASSY / POWER / W.C.L. "RICON"	1				
		FROM BATTERIES JUNCTION COMPARTMENT					
		TO COMPONENTS					
41	065050	CABLE ASSY / TO A/C BOX & FUEL TANK	1				
41	066440	CABLE ASSY / ENGINE COMPT ACCESSORIES	1				
42	065057	CABLE ASSY / A/C JCT BOX	1				
42	065768	CABLE ASSY / A/C JCT BOX	1				
		INSIDE REAR JUNCTION BOX					
51	065140	CABLE ASSY / FOR MAJOR COMPONENTS	1				
51	065447	CABLE ASSY / FOR MAJOR COMPONENTS	1				
51	065533	CABLE ASSY / FOR MAJOR COMPONENTS	1				
51	065570	CABLE ASSY / FOR MAJOR COMPONENTS	1				
51	065599	CABLE ASSY / FOR MAJOR COMPONENTS	1				
51	065935	CABLE ASSY / FOR MAJOR COMPONENTS	1				
51	065978	CABLE ASSY / FOR MAJOR COMPONENTS	1				
51	066441	CABLE ASSY / FOR MAJOR COMPONENTS	1				
		FROM REAR JUNCTION BOX					
		TO REAR ENGINE COMPARTMENT					
61	065124	CABLE ASSY / ENGINE COMPT ACCESSORIES	1				
61	065286	CABLE ASSY / ENGINE COMPT ACCESSORIES	1				
61	065571	CABLE ASSY / ENGINE COMPT ACCESSORIES	1				
61	065665	CABLE ASSY / ENGINE COMPT ACCESSORIES	1				
61	065469	CABLE ASSY / ENGINE COMPT ACCESSORIES	1				
61	065827	CABLE ASSY / ENGINE COMPT ACCESSORIES	1				

From Y-7046 To 6-8906		Date:07/2024	PAGE:Y2-0600-00

WIRING HARNESS - BUS 45' DIAGRAM D-060938

Item#	Part	Description	XLII 45	XLII MTH40	XLII MTH45	XLII MTH45E	NOTES
61	065767	CABLE ASSY / ENGINE COMPT ACCESSORIES	1				
61	065975	CABLE ASSY / ENGINE COMPT ACCESSORIES	1				
61	066567	CABLE ASSY / ENGINE COMPT ACCESSORIES	1				
62	064395	CABLE ASSY / W/"WEBASTO"	1				
63	064809	CABLE / ENGINE DOOR REAR LAMP W/BULB	2				
63	065712	CABLE / ENGINE DOOR REAR LAMP W/LEDS	1				
64	064822	CABLE HARNESS / REAR ROOF	1				
64	066117	CABLE HARNESS / REAR ROOF	1				
65	065237	CABLE ASSY / TIMER FLUSH PUMP	1				
65	065470	CABLE ASSY / TIMER FLUSH PUMP	1				
65	065813	CABLE ASSY / TIMER FLUSH PUMP	1				
66	064894	CABLE ASSY / COMPRESSOR DOOR LOCK	1				
67	065395	CABLE ASSY / W/GALLEY	1				
67	065705	CABLE ASSY / W/REAR GALLEY RELAY	1				
68	064994	CABLE ASSY / FUEL PUMP ELECTRIC	1				
69	064881	CABLE ASSY / ENGINE ACCESSORIES To 2-7823	1				
69	065598	CABLE ASSY / ENGINE ACCESSORIES From 2-7824 To 3-8164	1				
69	065786	CABLE ASSY / ENGINE ACCESSORIES From 4-8165 To 4-8279	1				
69	066008	CABLE ASSY / ENGINE ACCESSORIES From 4-8280 To 5-8358	1				
69	065976	CABLE ASSY / ENGINE ACCESSORIES From 5-8359 To 5-8425	1				
69	066200	CABLE ASSY / ENGINE ACCESSORIES From 5-8426	1				
70	064942	CABLE ASSY / W/2 "BOSCH" 140 AMPS	1				
71	065181	CABLE ASSY / ECU & REAR JCT BOX	1				
72	065789	CABLE ASSY / ECU & REAR JCT BOX	1				
72	065977	CABLE ASSY / ECU & REAR JCT BOX	1				
72	065977	CABLE ASSY / ECU & REAR JCT BOX	1				
		FROM REAR JUNCTION BOX					
		TO PARCEL RACK & LAVATORY					
81	065120	CABLE ASSY / PARCEL RACK & LAVATORY	1				
81	065249	CABLE ASSY / PARCEL RACK & LAVATORY	1				
81	065911	CABLE ASSY / PARCEL RACK & LAVATORY	1				
82	064562	CABLE HARNESS / IND LIGHT R.H. / W/DOOR	1				
83	064578	CABLE HARNESS / IND LIGHT BALLAST	2				
84	065091	CABLE ASSY / DIRECT LIGHT & SPEAKER R.H.	1				
84	065498	CABLE ASSY / DIRECT LIGHT & SPEAKER R.H.	1				
85	065183	CABLE ASSY / READING LIGHT CURBSIDE	1				
86	064564	CABLE HARNESS / IND LIGHT L.H. / W/DOOR	1				
87	064560	CABLE ASSY / DIRECT LIGHT & SPEAKER L.H.	1				
87	065494	CABLE ASSY / DIRECT LIGHT & SPEAKER L.H.	1				
88	065182	CABLE ASSY / READING LIGHT STREETSIDE	1				

From Y-7046 To 6-8906		Date:07/2024	PAGE:Y2-0600-00

WIRING HARNESS - BUS 45' DIAGRAM D-060938

Item#	Part	Description	XLII 45	XLII MTH40	XLII MTH45	XLII MTH45E	NOTES
		FROM REAR JUNCTION BOX					
		TO COMPARTMENT UNDER FLOOR					
101	065111	CABLE ASSY / FRT JCT BOX & REAR JCT BOX	1				
101	065337	CABLE ASSY / FRT JCT BOX & REAR JCT BOX	1				
101	065405	CABLE ASSY / FRT JCT BOX & REAR JCT BOX	1				
101	065594	CABLE ASSY / FRT JCT BOX & REAR JCT BOX	1				
101	066439	CABLE ASSY / FRT JCT BOX & REAR JCT BOX	1				
101	066590	CABLE ASSY / FRT JCT BOX & REAR JCT BOX	1				
102	065112	CABLE ASSY / FRONT BAGGAGE COMPARTMENT	1				
103	062796	CABLE ASSY / ACTUATOR POWER / EACH DOOR	6				
104	065113	CABLE ASSY / REAR BAGGAGE COMPARTMENT	1				
104	065577	CABLE ASSY / REAR BAGGAGE COMPARTMENT	1				
		VEHICLE WITH "WORLD" TRANSMISSION					
111	064777	CABLE, FRONT INTERFACE	1				
111	065348	CABLE, FRONT INTERFACE	1				
111	065448	CABLE, FRONT INTERFACE	1				
111	065596	CABLE, FRONT INTERFACE	1				
111	065860	CABLE, FRONT INTERFACE	1				
112	063782	CABLE ASSY / RESISTANCE MODULE & SWITCH	1				
113	064716	CABLE ASSY / TRANS & SPEED SWITCH	1				
114	064812	CABLE ASSY / TRANS & E.C.U. MODULE	1				
115	065330	CABLE ASSY / TRANS & SPEED SWITCH / W/RETARDER	1				
115	065750	CABLE ASSY / TRANS & SPEED SWITCH / W/RETARDER	1				
116	065331	CABLE ASSY / TRANS & SPEED SWITCH / W/O RETARDER	1				
116	065751	CABLE ASSY / TRANS & SPEED SWITCH / W/O RETARDER	1				
117	065029	CABLE ASSY / E.C.M. & ACCELERATOR PEDAL	1				
117	065404	CABLE ASSY / E.C.M. & ACCELERATOR PEDAL	1				
117	065446	CABLE ASSY / E.C.M. & ACCELERATOR PEDAL	1				
117	065597	CABLE ASSY / E.C.M. & ACCELERATOR PEDAL	1				
117	065787	CABLE ASSY / E.C.M. & ACCELERATOR PEDAL	1				
117	065979	CABLE ASSY / E.C.M. & ACCELERATOR PEDAL	1				
118	064286	CABLE ASSY / SPEED SWITCH	1				
119	065410	CABLE ASSY / SPEED SENSOR	1				
		VEHICLE WITH "EATON" TRANSMISSION					
121	065402	CABLE ASSY / ECU & FRONT SHIFTER	1				
121	065848	CABLE ASSY "ZF" TRANSMISSION	1				

From Y-7046 To 6-8906		Date:07/2024	PAGE:Y2-0600-00

WIRING HARNESS - BUS 45' DIAGRAM D-060938

Item#	Part	Description	XLII 45	XLII MTH40	XLII MTH45	XLII MTH45E	NOTES
121	066124	CABLE ASSY "ZF" TRANSMISSION	1				
121	066592	CABLE ASSY "ZF" TRANSMISSION	1				
122	065408	CABLE ASSY / "EATON"	1				
122	065833	CABLE ASSY / ECU & TRANS CONTROL "ZF"	1				
		INSIDE FRONT JUNCTION BOX					
141	065109	WIRING HARNESS FRONT JUNCTION BOX	1				
141	065347	WIRING HARNESS FRONT JUNCTION BOX	1				
141	065403	WIRING HARNESS FRONT JUNCTION BOX	1				
141	065449	WIRING HARNESS FRONT JUNCTION BOX	1				
141	065575	WIRING HARNESS FRONT JUNCTION BOX	1				
141	065595	WIRING HARNESS FRONT JUNCTION BOX	1				
141	065648	WIRING HARNESS FRONT JUNCTION BOX	1				
141	065762	WIRING HARNESS FRONT JUNCTION BOX	1				
141	065854	WIRING HARNESS FRONT JUNCTION BOX	1				
141	065716	WIRING HARNESS FRONT JUNCTION BOX	1				
141	066229	WIRING HARNESS FRONT JUNCTION BOX	1				
141	066438	WIRING HARNESS FRONT JUNCTION BOX	1				
141	066591	WIRING HARNESS FRONT JUNCTION BOX	1				
142	064908	CABLE ASSY TO STEERING SPEED SIGNAL ECU / W/"ZF" STEERING	1				
143	064199	CABLE ASSY / CLOCK & FRONT JCT PANEL	1				
144	065115	CABLE ASSY / MAIN AISLE LAMP	1				
		FROM FRONT JUNCTION BOX					
		TO "ABS" MODULE					
161	064781	CABLE ASSY / ABS MODULE TO FRONT & REAR CABLE	1				
161	065631	CABLE ASSY / ABS MODULE TO FRONT & REAR CABLE	1				
162	064640	CABLE ASSY / FRONT "ABS" SENSOR & VALVE	1				
162	065632	CABLE ASSY / FRONT "ABS" SENSOR & VALVE	1				
163	064876	CABLE ASSY / REAR "ABS" SENSOR & VALVE	1				
163	065634	CABLE ASSY / REAR "ABS" SENSOR & VALVE	1				
		FROM FRONT JUNCTION BOX					
		TO FORWARD VEHICULE					
173	065110	CABLE ASSY / FRONT LOWER END	1				
173	065346	CABLE ASSY / FRONT LOWER END	1				
173	065379	CABLE ASSY / FRONT LOWER END	1				
173	065562	CABLE ASSY / FRONT LOWER END	1				
173	065742	CABLE ASSY / FRONT LOWER END	1				

From Y-7046 To 6-8906		Date:07/2024	PAGE:Y2-0600-00

WIRING HARNESS - BUS 45' DIAGRAM D-060938

Item#	Part	Description	XLII 45	XLII MTH40	XLII MTH45	XLII MTH45E	NOTES
173	065718	CABLE ASSY / FRONT LOWER END	1				
173	066097	CABLE ASSY / FRONT LOWER END	1				
174	064816	CABLE HARNESS / FRONT ROOF	1				
174	065761	CABLE HARNESS / FRONT ROOF	1				
175	065108	WIRING HARNESS DASHBOARD CENTRAL MODULE	1				
175	065325	WIRING HARNESS DASHBOARD CENTRAL MODULE	1				
175	065561	WIRING HARNESS DASHBOARD CENTRAL MODULE	1				
175	065763	WIRING HARNESS DASHBOARD CENTRAL MODULE	1				
175	066093	WIRING HARNESS DASHBOARD CENTRAL MODULE	1				
175	066096	WIRING HARNESS DASHBOARD CENTRAL MODULE	1				
175	066437	WIRING HARNESS DASHBOARD CENTRAL MODULE	1				
179	062810	CABLE / FROM DESTINATION SIGN TO HARNESS	1				
		CABLE / CONNECTED AT HARNESS / # 173					
		FROM CABLE ASSY FRONT LOWER END					
181	065117	CABLE ASSY / "KNEELING PANEL"	1				
181	065349	CABLE ASSY / "KNEELING PANEL"	1				
181	066092	CABLE ASSY / "KNEELING PANEL"	1				
181	066225	CABLE ASSY / "KNEELING PANEL"	1				
182	065131	CABLE ASSY / ENTRANCE DOOR	1				
183	065114	CABLE ASSY / ENTRANCE DOOR CONTROL PANEL	1				
184	064780	CABLE ASSY / HEADLAMP	2				
184	065929	CABLE ASSY / W/"HALOGENE" LAMPS / W/XL-II	1				
184	065930	CABLE ASSY / W/"XENON" LAMPS / W/XL-II	1				
185	064828	CABLE ASSY / WINDSHIELD WASHER PUMP	1				
186	065005	CABLE ASSY / SERVICE DOOR	1				
187	065222	CABLE ASSY / PARKING BRAKE PRESSURE	1				
		CABLE / CONNECTED AT HARNESS / # 175					
		FROM CABLE ASSY DASHBOARD PANEL					
191	065063	CABLE ASSY / BACK-UP MONITOR	1				
. NS	990335	. CABLE MONITOR "CLARION"	1				
. NS	560851	. CONNECTOR / COM. MATE-N-LOCK / PH 4C / AMP 1-480426-0	1				
. NS	504397	. GROMMET / .750x1.062x.062x.375x1.375	1				
. NS	N.P.N.	. CABLE ASSY / BACK-UP MONITOR	AR				4
192	065118	WIRING HARNESS DASHBOARD LEFT MODULE	1				
192	065339	WIRING HARNESS DASHBOARD LEFT MODULE	1				
192	065406	WIRING HARNESS DASHBOARD LEFT MODULE	1				
192	065568	WIRING HARNESS DASHBOARD LEFT MODULE	1				
193	064584	WIRING HARNESS / W/ "ESPAR" PREHEATER	1				

From Y-7046 To 6-8906		Date:07/2024	PAGE:Y2-0600-00

WIRING HARNESS - BUS 45' DIAGRAM D-060938

Item#	Part	Description	XLII 45	XLII MTH40	XLII MTH45	XLII MTH45E	NOTES
193	065572	WIRING HARNESS / W/ "WEBASTO" PREHEATER	1				
193	064700	WIRING HARNESS / W/ "WEBASTO" PREHEATER	1				
		MISCELLANEOUS CABLES					
201	063296	CABLE ASSY / 110V BLOCK HEATER	1				
201	065517	CABLE ASSY / 110V BLOCK HEATER	1				
202	063295	CABLE ASSY / 110V BLOCK HEATER ENGINE SECTION	1				
203	064103	CABLE ASSY / 110V WATER HEATER LAVATORY TANK	1				
		D) WITH 8D BATTERIES "OPTION"					
		4) NO PARTS NUMBER					

From Y-7046 To 7-9095		Date:07/2024	PAGE:Y2-0600-50
WIRING HARNESS - MTH 40' & MTH 45' DIAGRAM D-060921			

DRAWING NOT AVAILABLE

From Y-7046 To 7-9095		Date:07/2024	PAGE:Y2-0600-50

WIRING HARNESS - MTH 40' & MTH 45' DIAGRAM D-060921

Item#	Part	Description	XLII 45	XLII MTH40	XLII MTH45	XLII MTH45E	NOTES
		IN BATTERIES COMPARTMENT					
1	061329	CABLE ASSY / B - TO GROUND		1	1	1	
1	063410	CABLE ASSY / B - TO GROUND		1	1	1	
1	063406	CABLE ASSY / B - TO BOOSTER BLOCK		1	1	1	
2	062371	CABLE ASSY / B + TO B +		2	2	2	
3	061180	CABLE ASSY / B - TO B -		AR	AR	AR	
4	064887	CABLE ASSY POWER		1	1	1	
6	063412	CABLE ASSY 24-2/0		1	1	1	
7	061036	CABLE ASSY / B - TO B -		1	1	1	
8	063411	CABLE ASSY / #0VA		1	1	1	
9	063415	CABLE ASSY / #12VA		1	1	1	
10	063414	CABLE ASSY / #24VA		1	1	1	
15	060717	CABLE ASSY / ALT & GROUND		1	1	1	
16	063894	CABLE ASSY #101		1	1	1	
16	063409	CABLE ASSY #101		1	1	1	
17	063297	CABLE ASSY # 102-2/0		1	1	1	
18	062214	CABLE ASSY # 0C		1	1	1	
19	062212	CABLE ASSY # 0B		1	1	1	
20	063432	CABLE ASSY #24G-2		1	1	1	
24	065088	CABLE ASSY #102		1	1	1	
28	064930	CABLE ASSY #24B		1	1	1	
		FROM REAR & BATTERIES JUNCTION BOX					
		TO A/C COMPARTMENT					
41	065050	CABLE ASSY / TO A/C BOX & FUEL TANK		1	1	1	
41	065636	CABLE ASSY / TO A/C BOX & FUEL TANK		1	1	1	
41	065769	CABLE ASSY / TO A/C BOX & FUEL TANK		1	1	1	
41	066004	CABLE ASSY / TO A/C BOX & FUEL TANK		1	1	1	
41	066472	CABLE ASSY / TO A/C BOX & FUEL TANK		1	1	1	
41	066392	CABLE ASSY / TO A/C BOX & FUEL TANK SEE DRAWING		1	1	1	
42	065768	CABLE ASSY / A/C JCT BOX		1	1	1	
43	064883	CABLE ASSY / FUEL TANK		1	1	1	
43	065699	CABLE ASSY / FUEL TANK		1	1	1	
		INSIDE REAR JUNCTION BOX					
51	064827	CABLE ASSY / FOR MAJOR COMPONENTS		1	1	1	
51	065452	CABLE ASSY / FOR MAJOR COMPONENTS		1	1	1	
51	065666	CABLE ASSY / FOR MAJOR COMPONENTS		1	1	1	

From Y-7046 To 7-9095		Date:07/2024	PAGE:Y2-0600-50

WIRING HARNESS - MTH 40' & MTH 45' DIAGRAM D-060921

Item#	Part	Description	XLII 45	XLII MTH40	XLII MTH45	XLII MTH45E	NOTES
51	065947	CABLE ASSY / FOR MAJOR COMPONENTS		1	1	1	
51	065974	CABLE ASSY / FOR MAJOR COMPONENTS		1	1	1	
51	066349	CABLE ASSY / FOR MAJOR COMPONENTS		1	1	1	
		FROM REAR JUNCTION BOX					
		TO REAR ENGINE COMPARTMENT					
61	064793	WIRING HARNESS ENGINE COMPARTMENT		1	1	1	
61	065285	WIRING HARNESS ENGINE COMPARTMENT		1	1	1	
61	065667	WIRING HARNESS ENGINE COMPARTMENT		1	1	1	
61	065766	WIRING HARNESS ENGINE COMPARTMENT		1	1	1	
61	065970	WIRING HARNESS ENGINE COMPARTMENT		1	1	1	
61	065350	WIRING HARNESS ENGINE COMPARTMENT SEE DRAWING		1	1	1	
64	064822	CABLE HARNESS / REAR ROOF		1	1	1	
64	066117	CABLE HARNESS / REAR ROOF		1	1	1	
66	064894	CABLE ASSY / COMPRESSOR DOOR LOCK		1	1	1	
68	064994	CABLE ASSY / FUEL PUMP ELECTRIC		1	1	1	
69	064881	CABLE ASSY / ENGINE ACCESSORIES		1	1	1	
69	065598	CABLE ASSY / ENGINE ACCESSORIES		1	1	1	
69	065786	CABLE ASSY / ENGINE ACCESSORIES		1	1	1	
69	066008	CABLE ASSY / ENGINE ACCESSORIES		1	1	1	
69	065976	CABLE ASSY / ENGINE ACCESSORIES		1	1	1	
69	066200	CABLE ASSY / ENGINE ACCESSORIES		1	1	1	
69	066848	CABLE ASSY / ENGINE ACCESSORIES		1	1	1	
70	064942	CABLE ASSY / W/2 "BOSCH" 140 AMPS		1	1	1	
71	062723	CABLE ASSY / W/"DELCO" 75 AMPS		1	1	1	
71	065013	CABLE ASSY / W/"DELCO" 300 AMPS		1	1	1	
72	064886	CABLE ASSY / ACCESSORY BATTERY		1	1	1	
72	065421	CABLE ASSY / ACCESSORY BATTERY		1	1	1	
72	065790	CABLE ASSY / ACCESSORY BATTERY		1	1	1	
72	065973	CABLE ASSY / ACCESSORY BATTERY SEE DRAWING		.	.	.	
		FROM REAR JUNCTION BOX					
		TO COMPARTMENT UNDER FLOOR					
101	065195	CABLE ASSY / FRT JCT BOX & REAR JCT BOX		1			
101	066025	CABLE ASSY / FRT JCT BOX & REAR JCT BOX		1			
101	066351	CABLE ASSY / FRT JCT BOX & REAR JCT BOX		1			
101	064804	CABLE ASSY / FRT JCT BOX & REAR JCT BOX			1		
101	066026	CABLE ASSY / FRT JCT BOX & REAR JCT BOX			1		
101	066345	CABLE ASSY / FRT JCT BOX & REAR JCT BOX			1		
101	065298	CABLE ASSY / FRT JCT BOX & REAR JCT BOX				1	

From Y-7046 To 7-9095		Date:07/2024	PAGE:Y2-0600-50

WIRING HARNESS - MTH 40' & MTH 45' DIAGRAM D-060921

Item#	Part	Description	XLII 45	XLII MTH40	XLII MTH45	XLII MTH45E	NOTES
101	066027	CABLE ASSY / FRT JCT BOX & REAR JCT BOX				1	
101	066351	CABLE ASSY / FRT JCT BOX & REAR JCT BOX				1	
102	064872	CABLE ASSY / FRONT BAGGAGE COMPARTMENT		1		1	
102	066024	CABLE ASSY / FRONT BAGGAGE COMPARTMENT		1		1	
102	065196	CABLE ASSY / FRONT BAGGAGE COMPARTMENT			1		
102	066023	CABLE ASSY / FRONT BAGGAGE COMPARTMENT			1		
104	064873	CABLE ASSY / REAR BAGGAGE COMPARTMENT		1	1	1	
104	065578	CABLE ASSY / REAR BAGGAGE COMPARTMENT		1	1	1	
104	066022	CABLE ASSY / REAR BAGGAGE COMPARTMENT		1	1	1	
104	066390	CABLE ASSY / REAR BAGGAGE COMPARTMENT		1	1	1	
		VEHICLE WITH "WORLD" TRANSMISSION					
111	064777	CABLE, FRONT INTERFACE		1	1	1	
111	065348	CABLE, FRONT INTERFACE		1	1	1	
111	065596	CABLE, FRONT INTERFACE		1	1	1	
111	066387	CABLE, FRONT INTERFACE		1	1	1	
111	066842	CABLE, FRONT INTERFACE		1	1	1	
112	063782	CABLE ASSY / RESISTANCE MODULE & SWITCH		1	1	1	
114	064812	CABLE ASSY / TRANS & E.C.U. MODULE		1	1	1	
114	065260	CABLE ASSY / TRANS & E.C.U. MODULE		1	1	1	
115	065330	CABLE ASSY / TRANS & SPEED SWITCH / W/RETARDER		1	1	1	
115	065750	CABLE ASSY / TRANS & SPEED SWITCH / W/RETARDER		1	1	1	
116	065331	CABLE ASSY / TRANS & SPEED SWITCH / W/O RETARDER		1	1	1	
116	065751	CABLE ASSY / TRANS & SPEED SWITCH / W/O RETARDER		1	1	1	
117	065261	CABLE ASSY / E.C.M. & ACCELERATOR PEDAL		1			
117	065427	CABLE ASSY / E.C.M. & ACCELERATOR PEDAL		1			
117	065451	CABLE ASSY / E.C.M. & ACCELERATOR PEDAL		1			
117	065788	CABLE ASSY / E.C.M. & ACCELERATOR PEDAL		1			
117	065972	CABLE ASSY / E.C.M. & ACCELERATOR PEDAL		1			
117	066845	CABLE ASSY / E.C.M. & ACCELERATOR PEDAL		1			
117	065029	CABLE ASSY / E.C.M. & ACCELERATOR PEDAL			1	1	
117	065404	CABLE ASSY / E.C.M. & ACCELERATOR PEDAL			1	1	
117	065446	CABLE ASSY / E.C.M. & ACCELERATOR PEDAL			1	1	
117	065597	CABLE ASSY / E.C.M. & ACCELERATOR PEDAL			1	1	
117	065787	CABLE ASSY / E.C.M. & ACCELERATOR PEDAL			1	1	
117	065979	CABLE ASSY / E.C.M. & ACCELERATOR PEDAL			1	1	
117	066846	CABLE ASSY / E.C.M. & ACCELERATOR PEDAL			1	1	
		INSIDE FRONT JUNCTION BOX					
141	064815	WIRING HARNESS FRONT JUNCTION BOX		1	1	1	

From Y-7046 To 7-9095		Date:07/2024	PAGE:Y2-0600-50

WIRING HARNESS - MTH 40' & MTH 45' DIAGRAM D-060921

Item#	Part	Description	XLII 45	XLII MTH40	XLII MTH45	XLII MTH45E	NOTES
141	065425	WIRING HARNESS FRONT JUNCTION BOX		1	1	1	
141	065450	WIRING HARNESS FRONT JUNCTION BOX		1	1	1	
141	065551	WIRING HARNESS FRONT JUNCTION BOX		1	1	1	
141	065640	WIRING HARNESS FRONT JUNCTION BOX		1	1	1	
141	065688	WIRING HARNESS FRONT JUNCTION BOX				1	
141	065764	WIRING HARNESS FRONT JUNCTION BOX				1	
141	065711	WIRING HARNESS FRONT JUNCTION BOX		1	1	1	
141	066231	WIRING HARNESS FRONT JUNCTION BOX		1	1	1	
141	066470	WIRING HARNESS FRONT JUNCTION BOX		1	1	1	
141	066384	WIRING HARNESS FRONT JUNCTION BOX		1	1	1	
141	065713	WIRING HARNESS FRONT JUNCTION BOX		1	1	1	
141	066232	WIRING HARNESS FRONT JUNCTION BOX		1	1	1	
141	066471	WIRING HARNESS FRONT JUNCTION BOX		1	1	1	
141	066385	WIRING HARNESS FRONT JUNCTION BOX		1	1	1	
142	064908	CABLE ASSY TO STEERING SPEED SIGNAL ECU / W/"ZF" STEERING		1	1	1	
143	066837	CABLE ASSY / HEADLAMP WASHER RELAY		1	1	1	
144	066838	CABLE ASSY / SWITCH HEADLAMP WASHER PUMP / "H" SERIES		1	1	1	
		FROM FRONT JUNCTION BOX					
		TO "ABS" MODULE					
161	064781	CABLE ASSY / ABS MODULE TO FRONT & REAR CABLE		1	1	1	
161	065631	CABLE ASSY / ABS MODULE TO FRONT & REAR CABLE		1	1	1	
162	064640	CABLE ASSY / FRONT "ABS" SENSOR & VALVE		1	1	1	
162	065632	CABLE ASSY / FRONT "ABS" SENSOR & VALVE		1	1	1	
163	064876	CABLE ASSY / REAR "ABS" SENSOR & VALVE		1	1	1	
163	065634	CABLE ASSY / REAR "ABS" SENSOR & VALVE		1	1	1	
		FROM FRONT JUNCTION BOX					
		TO FORWARD VEHICULE					
173	064779	CABLE ASSY / FRONT LOWER END		1	1	1	
173	065439	CABLE ASSY / FRONT LOWER END		1	1	1	
173	065564	CABLE ASSY / FRONT LOWER END		1	1	1	
173	065550	CABLE ASSY / FRONT LOWER END		1	1	1	
173	065783	CABLE ASSY / FRONT LOWER END		1	1	1	
173	065715	CABLE ASSY / FRONT LOWER END		1	1	1	
173	066099	CABLE ASSY / FRONT LOWER END		1	1	1	
173	066388	CABLE ASSY / FRONT LOWER END		1	1	1	
174	064816	CABLE HARNESS / FRONT ROOF		1	1	1	
174	065761	CABLE HARNESS / FRONT ROOF		1	1	1	
174	066116	CABLE HARNESS / FRONT ROOF		1	1	1	

From Y-7046 To 7-9095		Date:07/2024	PAGE:Y2-0600-50

WIRING HARNESS - MTH 40' & MTH 45' DIAGRAM D-060921

Item#	Part	Description	XLII 45	XLII MTH40	XLII MTH45	XLII MTH45E	NOTES
175	064849	WIRING HARNESS DASHBOARD CENTRAL MODULE		1	1	1	
175	065324	WIRING HARNESS DASHBOARD CENTRAL MODULE		1	1	1	
175	065428	WIRING HARNESS DASHBOARD CENTRAL MODULE		1	1	1	
175	065563	WIRING HARNESS DASHBOARD CENTRAL MODULE		1	1	1	
175	065765	WIRING HARNESS DASHBOARD CENTRAL MODULE		1	1	1	
175	065855	WIRING HARNESS DASHBOARD CENTRAL MODULE		1	1	1	
175	066098	WIRING HARNESS DASHBOARD CENTRAL MODULE		1	1	1	
175	066339	WIRING HARNESS DASHBOARD CENTRAL MODULE		1	1	1	
175	066386	WIRING HARNESS DASHBOARD CENTRAL MODULE		1	1	1	
		CABLE / CONNECTED AT HARNESS / # 173					
		FROM CABLE ASSY FRONT LOWER END					
182	064829	CABLE ASSY / ENTRANCE DOOR		1	1	1	
183	064817	WIRING HARNESS KEYLESS MODULE		1	1	1	
183	065382	WIRING HARNESS KEYLESS MODULE		1	1	1	
183	065549	WIRING HARNESS KEYLESS MODULE		1	1	1	
184	064780	CABLE ASSY / HEADLAMP		1	1	1	
184	065929	CABLE ASSY / W/"HALOGENE" LAMPS / W/XL-II		1	1	1	
184	065930	CABLE ASSY / W/"XENON" LAMPS / W/XL-II		1	1	1	
185	066516	CABLE ASSY / WINDSHIELD WASHER PUMP		1	1	1	
186	065005	CABLE ASSY / SERVICE DOOR		1	1	1	
187	065222	CABLE ASSY / PARKING BRAKE PRESSURE		1	1	1	
		CABLE / CONNECTED AT HARNESS / # 175					
		FROM CABLE ASSY DASHBOARD PANEL					
192	064871	WIRING HARNESS DASHBOARD LEFT MODULE		1	1	1	
192	065338	WIRING HARNESS DASHBOARD LEFT MODULE		1	1	1	
193	064521	WIRING HARNESS / W/ "ESPAR" PREHEATER		1	1	1	
193	064726	WIRING HARNESS / W/ "WEBASTO" PREHEATER		1	1	1	
		MISCELLANEOUS CABLE					
201	063296	CABLE ASSY / 110V BLOCK HEATER		1	1	1	
201	065517	CABLE ASSY / 110V BLOCK HEATER		1	1	1	
202	063295	CABLE ASSY / 110V BLOCK HEATER ENGINE SECTION		1	1	1	

From 7-9096 To 8-9339		Date:07/2024	PAGE:Y2-0600-52

WIRING HARNESS - MTH W/MUX DIAGRAM D-061080

DRAWING FROM REV 02

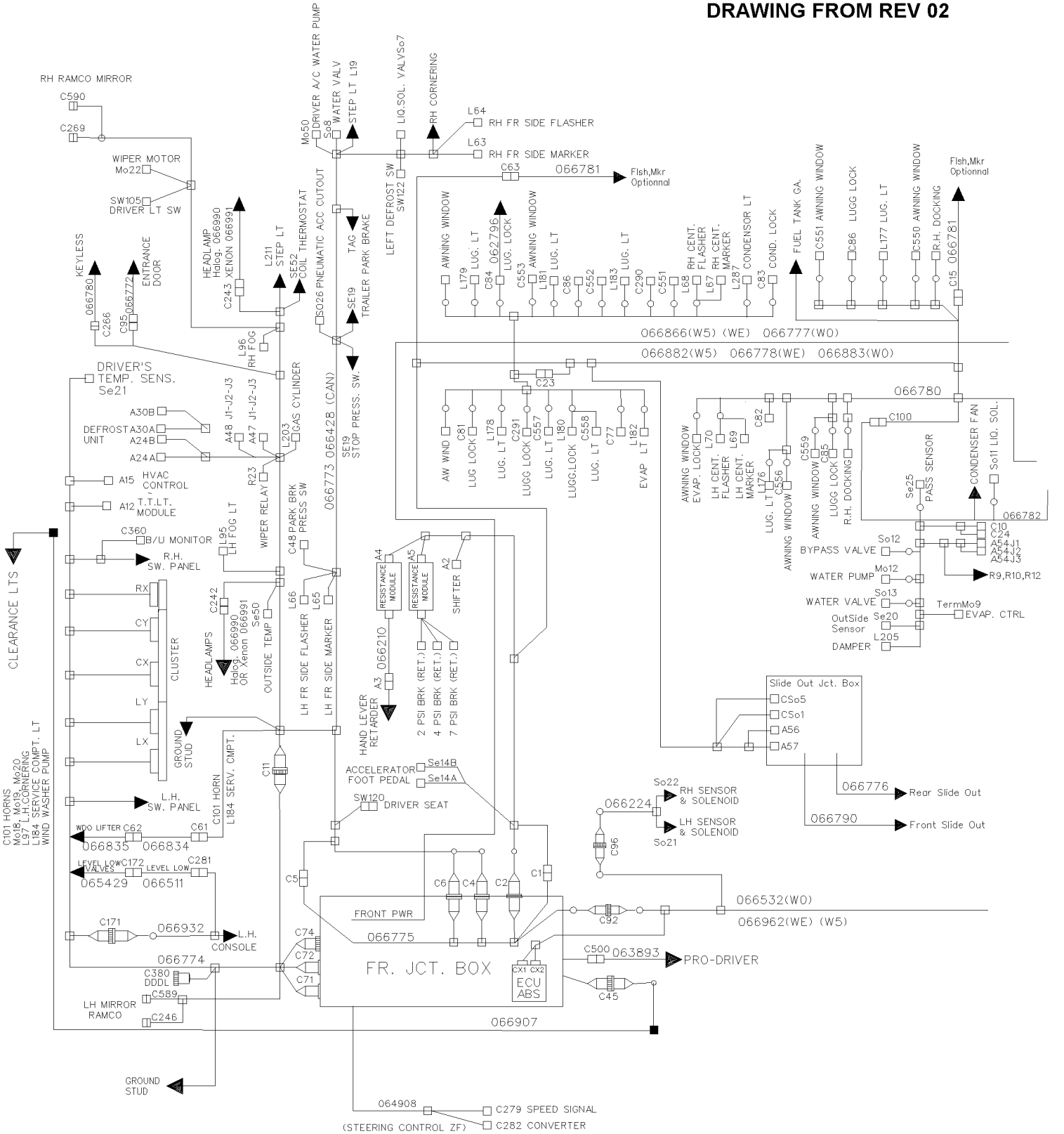

From 7-9096 To 8-9339		Date:07/2024	PAGE:Y2-0600-52

WIRING HARNESS - MTH W/MUX DIAGRAM D-061080

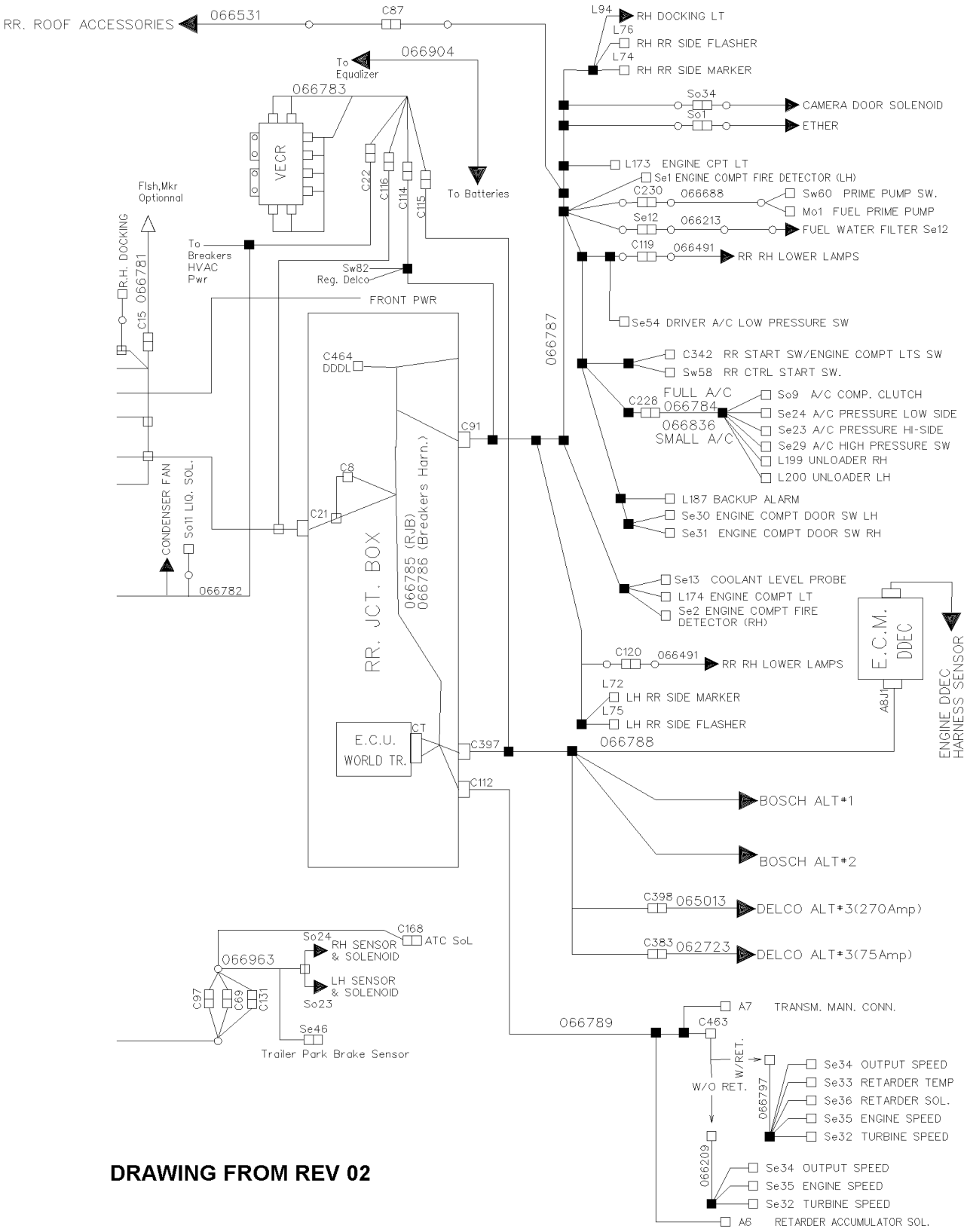

DRAWING FROM REV 02

From 7-9096 To 8-9339		Date:07/2024	PAGE:Y2-0600-52
WIRING HARNESS - MTH W/MUX DIAGRAM D-061080			

BATTERIES STANDARD

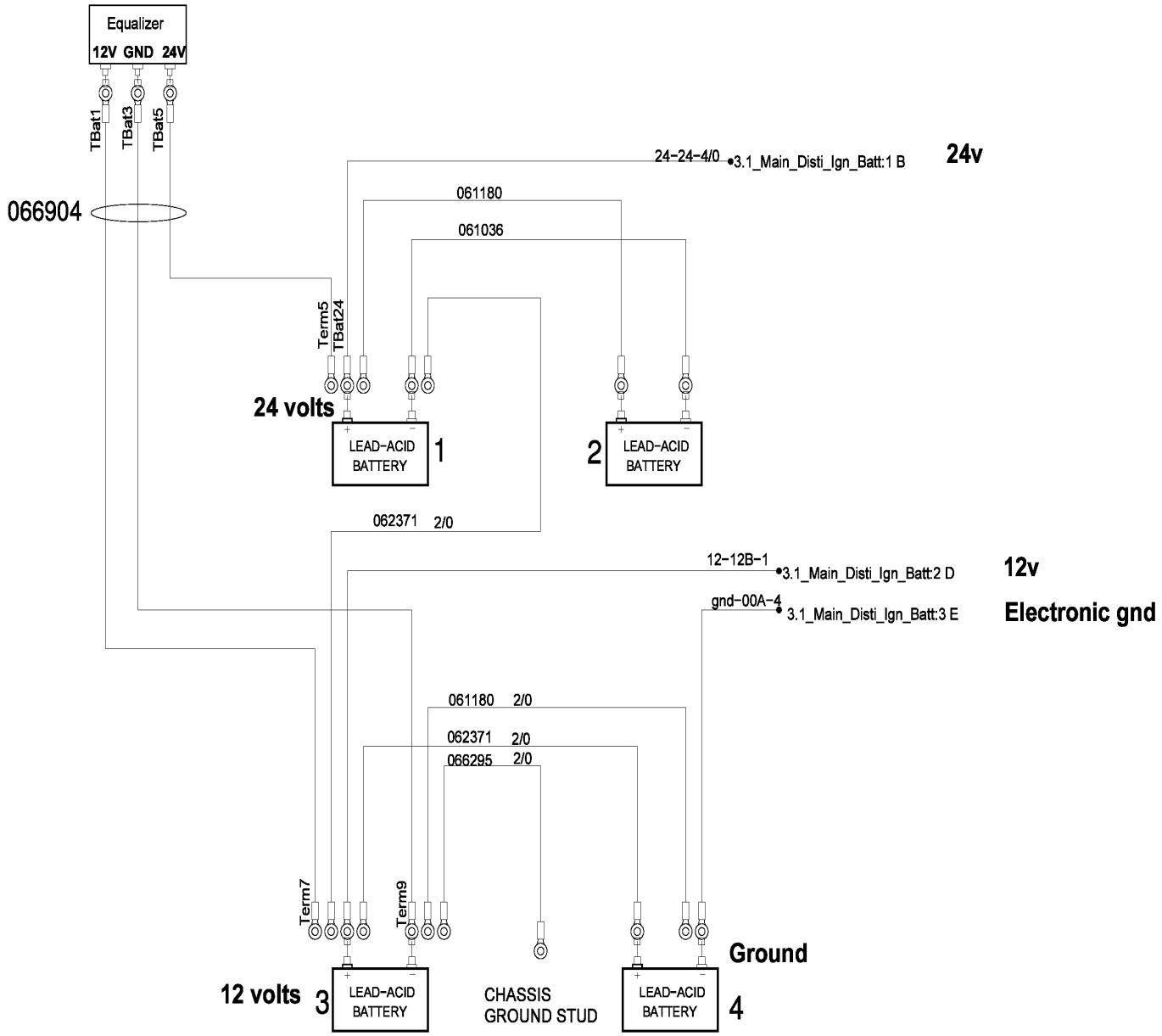

From 7-9096 To 8-9339		Date:07/2024	PAGE:Y2-0600-52

WIRING HARNESS - MTH W/MUX DIAGRAM D-061080

Item#	Part	Description	XLII 45	XLII MTH40	XLII MTH45	XLII MTH45E	NOTES
		IN BATTERIES COMPARTMENT					
1	066295	CABLE ASSY / TO GROUND			1	1	
2	062371	CABLE ASSY / B + TO B +			1	1	
3	061180	CABLE ASSY / B - TO B -			1	1	
4	061036	CABLE ASSY / B - TO B -			1	1	
7	066904	CABLE HARNESS / EQUALIZER / MUX			1	1	
		FROM REAR JUNCTION BOX					
		TO E.C.U. & ENGINE ACCESSORIES					
42	066788	CABLE ASSY / ECU & REAR JCT BOX			1	1	
47	066461	CABLE ASSY / ECU & "DELCO" 50DN			1	1	
47	065013	CABLE ASSY / W/"DELCO" 300 AMPS			1	1	
48	062723	CABLE ASSY / W/"DELCO" 75 AMPS			1	1	
		INSIDE REAR JUNCTION BOX					
51	066785	CABLE HARNESS / REAR JUNCTION BOX			1	1	
53	066786	CABLE POWER / BREAKERS & HVAC			1	1	
		FROM REAR JUNCTION BOX					
		TO ENGINE COMPARTMENT					
61	066787	CABLE HARNESS / ENGINE ACCESSORIES / W/MUX			1	1	
62	066531	CABLE ASSY / RH ROOF ACCESSORIES			1	1	
63	066491	CABLE / ENGINE DOOR REAR LAMP W/LEDS			2	2	
64	066783	CABLE ASSY TO REAR "VEC"			1	1	
65	066213	CABLE ASSY / FUEL WATER FILTER			1	1	
68	066784	CABLE ASSY / A/C COMPRESSOR 05G			1	1	
68	066836	CABLE ASSY / A/C COMPRESSOR W/SMALL SYSTEM			1	1	
69	066688	CABLE ASSY / FUEL PUMP PRIMER			1	1	
		FROM REAR JUNCTION BOX					
		TO COMPARTMENT UNDER FLOOR					
101	066777	CABLE ASSY / FRT JCT BOX & REAR JCT BOX				1	
101	066886	CABLE ASSY / FRT JCT BOX & REAR JCT BOX			1		
102	066883	CABLE ASSY / POWER TO FRONT ACCESSORIES WO		1			
102	066882	CABLE ASSY / POWER TO FRONT ACCESSORIES			1		
102	066778	CABLE ASSY / POWER TO FRONT ACCESSORIES				1	
103	062796	CABLE ASSY / ACTUATOR POWER / EACH DOOR			1	1	

From 7-9096 To 8-9339		Date:07/2024	PAGE:Y2-0600-52

WIRING HARNESS - MTH W/MUX DIAGRAM D-061080

Item#	Part	Description	XLII 45	XLII MTH40	XLII MTH45	XLII MTH45E	NOTES
104	066780	CABLE ASSY / KEYLESS ENTRANCE DOOR			1	1	
105	066781	CABLE ASSY / SIDE MARKER "ADDITIONAL"			1	1	
106	066782	CABLE ASSY / EVAPORATOR ACCESSORIES COMPARTMENT			1	1	
107	066776	WIRING HARNESS SLIDE-OUT REAR LEFT			1		
108	066790	WIRING HARNESS SLIDE-OUT FRONT LEFT			1	1	
		FROM REAR JUNCTION BOX					
		OF VEHICLE WITH "WORLD" TRANSMISSION					
112	066210	CABLE ASSY / RESISTANCE MODULE & SWITCH / MUX			1	1	
114	066789	CABLE ASSY / E.C.U. & TRANS SPEED SWITCH / MUX			1	1	
115	066797	CABLE HARNESS / SENSOR WTEC W/RETARDER / MUX			1	1	
116	066209	CABLE HARNESS / SENSOR WTEC W/OUT RETARDER / MUX			1	1	
		INSIDE FRONT JUNCTION BOX					
141	066775	WIRING HARNESS FRONT JUNCTION BOX / W/MUX			1	1	
142	064908	CABLE ASSY TO STEERING SPEED SIGNAL ECU / W/"ZF" STEERING To 7-9095			1	1	
142	066570	CABLE ASSY TO STEERING SPEED SIGNAL ECU From 7-9096			1	1	
		FROM FRONT JUNCTION BOX					
		TO "ABS" MODULE					
161	066532	CABLE ASSY / FJB TO "ABS" & CABLE FRT & RR				1	
161	066962	CABLE ASSY / FJB TO "ABS" & CABLE FRT & RR			1		
162	066224	CABLE ASSY / FRONT "ABS" SENSOR & VALVE / MUX			1	1	
163	066550	CABLE ASSY / REAR "ABS" SENSOR & VALVE / MUX			1	1	
163	066963	CABLE ASSY / REAR "ABS" SENSOR & VALVE / MUX			1	1	
		FROM FRONT JUNCTION BOX					
		TO FORWARD VEHICULE					
173	066773	CABLE ASSY / FRONT LOWER END / MUX			1	1	
173	066428	CABLE ASSY CAN POWER LOGIC			1	1	
174	066907	CABLE ASSY / FRONT ROOF / MUX			1	1	
175	066774	WIRING HARNESS DASHBOARD CENTRAL MODULE			1	1	
176	066834	CABLE ASSY FRT SERVICE COMPARTMENT / MUX			1	1	
177	066835	CABLE ASSY FRONT SERVICE DOOR / MUX			1	1	
		CABLE / CONNECTED AT HARNESS / # 175					
		FROM DASHBOARD CENTRAL MODULE					

From 7-9096 To 8-9339		Date:07/2024	PAGE:Y2-0600-52

WIRING HARNESS - MTH W/MUX DIAGRAM D-061080

Item#	Part	Description	XLII 45	XLII MTH40	XLII MTH45	XLII MTH45E	NOTES
181	066932	WIRING HARNESS DASHBOARD LEFT MODULE			1	1	
182	066511	CABLE HARNESS / CLEAR. LIGHT REAR IN DEFLECTOR / MUX			1	1	
183	065429	CABLE ASSY / VALVE "LEVEL-LOW"			1	1	
		CABLE / CONNECTED AT HARNESS / # 173					
		FROM CABLE ASS FRONT LOWER END					
191	066772	CABLE ASSY / ENTRANCE DOOR MODULE / MUX To 7-9263			1	1	
191	067176	CABLE ASSY / ENTRANCE DOOR MODULE / MUX From 7-9264			1	1	
192	066780	CABLE ASSY / KEYLESS ENTRANCE DOOR			1	1	
194	066990	CABLE ASSY / W/"HALOGENE" LAMPS / MUX			2	2	
195	066991	CABLE ASSY / W/"XENON" LAMPS / MUX			2	2	
		MISCELLANEOUS CABLE					
201	063296	CABLE ASSY / 110V BLOCK HEATER			1	1	
201	065517	CABLE ASSY / 110V BLOCK HEATER			1	1	
202	063295	CABLE ASSY / 110V BLOCK HEATER ENGINE SECTION			1	1	

From Y-7046 To 8-9339		Date:07/2024	PAGE:Y2-0605-00
ALTERNATOR 24V/140 AMPS / "BOSCH"			

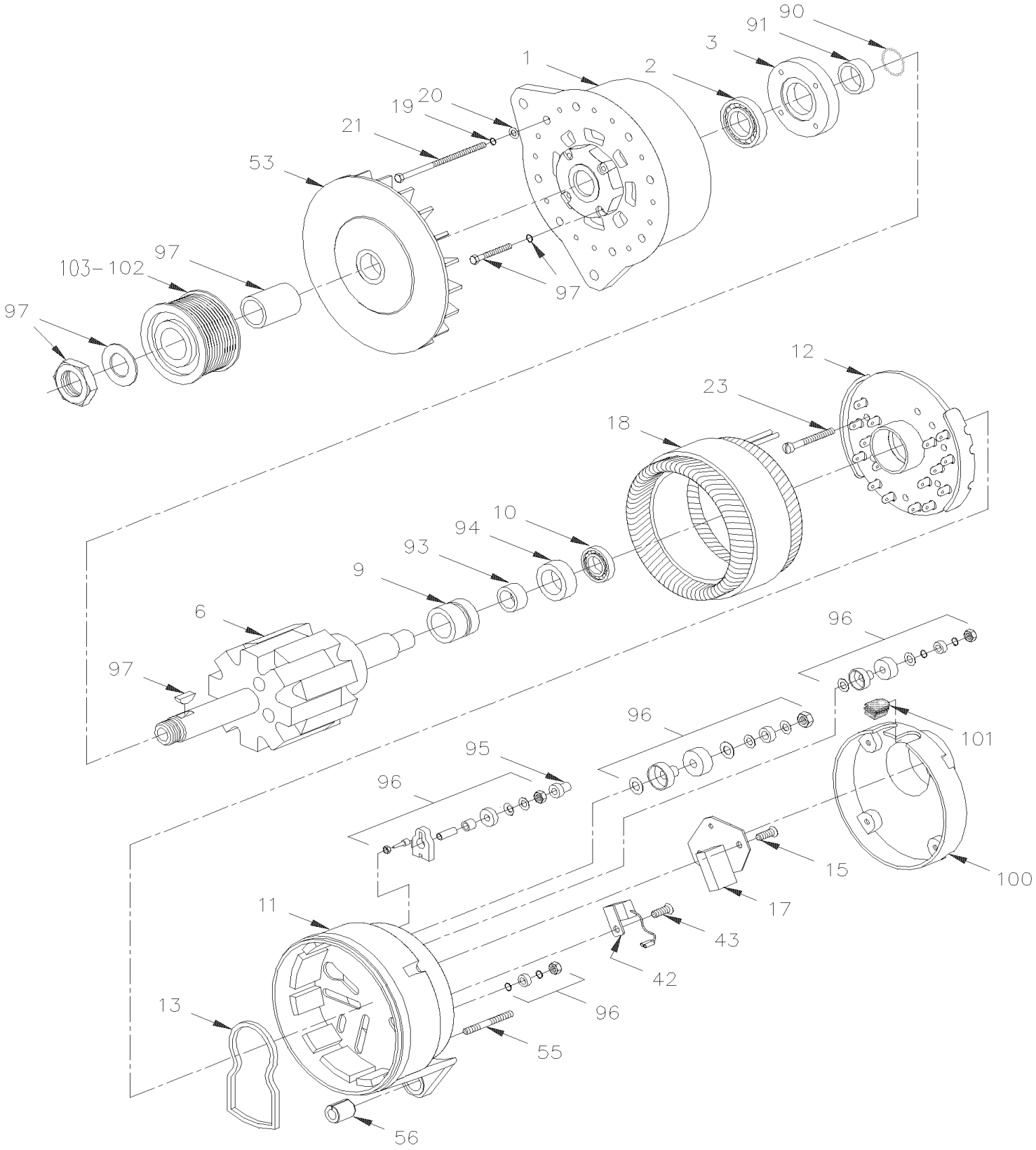

From Y-7046 To 8-9339		Date:07/2024	PAGE:Y2-0605-00

ALTERNATOR 24V/140 AMPS / "BOSCH"

Item#	Part	Description	XLII 45	XLII MTH40	XLII MTH45	XLII MTH45E	NOTES
	562752	ALTERNATOR ASSY 24V/140 AMPS	2				
	562752	ALTERNATOR ASSY 24V/140 AMPS From 2-7908				2	
	562752	ALTERNATOR ASSY 24V/140 AMPS From 5-8756			1		
1	562971	. DRIVE END SHIELD	1		1	1	
2	562972	. BALL BEARING	1		1	1	
3	562973	. COVER PLATE / (1 120 033 009)	1		1	1	
6	562974	. ROTOR / (1 124 037 004)	1		1	1	
9	562975	. . COLLECTOR-RING	1		1	1	
10	562976	. CYLINDER ROLLER BEARING	1		1	1	
NS	684922	. . GREASE "POLYREX" EM / TO USE W/"BOSCH" ALTERNATOR	AR		AR	AR	
11	562977	. COLLECTOR-RING END SHIELD	1		1	1	
12	562978	. RECTIFIER PLATE ASSY / (1 127 320 973)	1		1	1	
13	562979	. . SEAL	1		1	1	
15	562980	. WASHER-AND-SCREW ASSEMBLY	3		3	3	
17	562981	. TRANSISTOR REGULATOR	1		1	1	
17	562982	. . COMPRESSION SPRING	2		2	2	
17	562983	. . BRUSH SET	2		2	2	
17	562984	. GASKET	1		1	1	
18	562985	. STATOR ASSY	1		1	1	
19	562986	. WASHER LOCK SPRING 6MM	4		4	4	
20	562987	. PLAIN WASHER	4		4	4	
21	562988	. OVAL-HEAD SCREW	4		4	4	
23	562989	. WASHER-AND-SCREW ASSEMBLY	3		3	3	
42	562990	. SUPPRESSION CAPACITOR	1		1	1	
43	562991	. OVAL-HEAD SCREW M6 X 10-5.8	1		1	1	
53	562992	. FAN	1		1	1	
55	562993	. STUD M6 X 35-5.6 / (2 912 212 207)	4		4	4	
56	562994	. EXPANSION BUSHING / (1 120 300 018)	1		1	1	
90	562995	. RETAINER DIN 9045-30 / (2916 600 016)	1		1	1	
91	562996	. SUPPORT RING / (1 120 114 002)	1		1	1	
93	562997	. SPACER RING	1		1	1	
94	562998	. RADIAL SEAL	1		1	1	
95	562999	. PROTECTIVE CAP	1		1	1	
96	563000	. PARTS SET TERMINAL B+,B-,D+,W /	1		1	1	
97	563001	. KIT NUT & WASHER M24-1.5 YC	1		1	1	
100	562851	AIR-INTAKE COVER	1		1	1	
101	563002	GROMMET / (1 120 312 000)	1		1	1	
101	504421	GROMMET / .625x.875x.187x.437x1.125	1		1	1	
102	065465	PULLEY ALTERNATOR / "BOSCH" / 12 RIB To 3-8164	1			1	
102	065835	PULLEY ALTERNATOR / "BOSCH" / 10 RIB From 4-8165 To 5-8412	1			1	
102	066062	PULLEY ALTERNATOR / "BOSCH" / 10 RIB From 5-8413	1		1	1	
103	**Y2-0610-00**	**ALTERNATOR MOUNTING / "BOSCH" WITH DETROIT S-60 To 3-8164**					

From Y-7046 To 8-9339		Date:07/2024	PAGE:Y2-0605-00

ALTERNATOR 24V/140 AMPS / "BOSCH"

Item#	Part	Description	XLII 45	XLII MTH40	XLII MTH45	XLII MTH45E	NOTES
103	Y2-0610-01	ALTERNATOR MOUNTING / "BOSCH" WITH DETROIT S-60 From 4-8165					
103	Y2-0610-54	ALTERNATOR MOUNTING / "BOSCH" - 24V/140A / GEARBOX INSTAL	1	1	1	1	

From Y-7046 To 8-9339		Date:07/2024	PAGE:Y2-0605-51
ALTERNATOR 24V/270 AMPS / "DELCO" #562235			

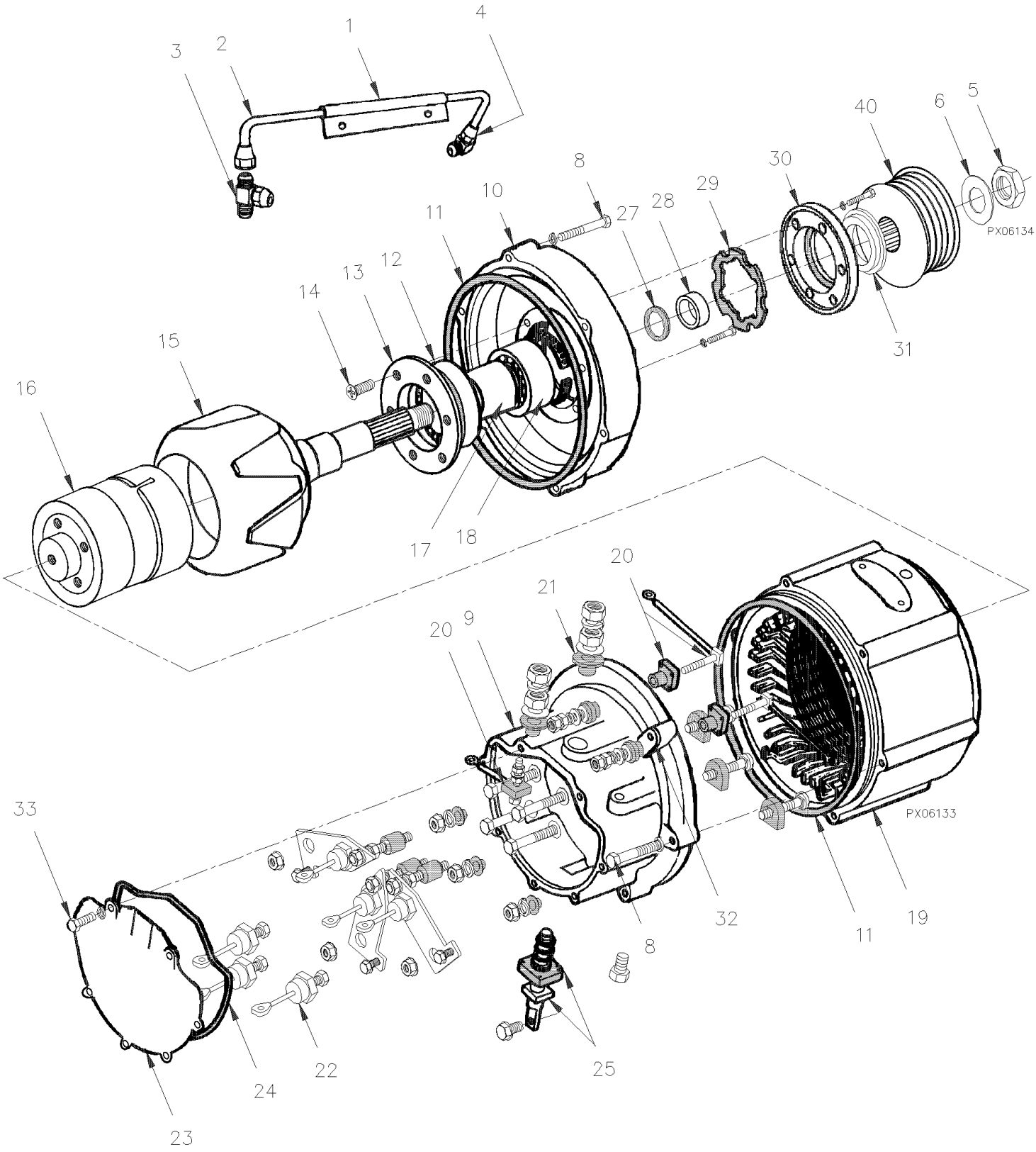

From Y-7046 To 8-9339		Date:07/2024	PAGE:Y2-0605-51

ALTERNATOR 24V/270 AMPS / "DELCO" #562235

Item#	Part	Description	XLII 45	XLII MTH40	XLII MTH45	XLII MTH45E	NOTES
	562235	ALTERNATOR ASSY 24V/270 AMPS To 4-8313		1	1	1	
	563437	ALTERNATOR ASSY 24V/270 AMPS From 4-8314		1	1	1	
1	561169	. CLAMP / OIL LINE TUBE		1	1	1	
2	562238	. OIL LINE TUBE		1	1	1	
3	561171	. TEE		1	1	1	
4	561170	. ELBOW 90°		1	1	1	
5	562457	. NUT, DRIVE END		1	1	1	
6	560973	. WASHER / PINION		1	1	1	
8	500170	. SCREW CAP HEX 1/4-20x2 G5 PT Z050		12	12	12	
NS	500473	. WASHER LO SPT .262x.489x.062 Z050		12	12	12	
9	N8885614	. FRAME RECTIFIER END To 4-8313		1	1	1	
9	563440	. FRAME RECTIFIER END From 4-8314		1	1	1	
10	562241	. FRAME D.E.		1	1	1	
. NS	562509	. . OIL SEAL 2.247" O.D.		1	1	1	
10	10523585	. FRAME D.E.		1	1	1	
11	562196	. O-RING		2	2	2	
12	562186	. BEARING INNER D.E.		1	1	1	
13	N8885671	. RETAINER BEARING (1941060)		1	1	1	
14	500371	. SCREW MA FL PH M4-0.7x8 N500		6	6	6	
15	562240	. ROTOR		1	1	1	
16	562182	. FIELD ASSY		1	1	1	
18	562184	. BEARING OUTER D.E.		1	1	1	
19	562694	. STATOR ASSY / W/FLEX LEAD To 4-8313		1	1	1	
19	563438	. STATOR ASSY / W/FLEX LEAD & INSULATOR From 4-8314		1	1	1	
20	560724	. STUD TERMINAL FIELD		2	2	2	
21	560846	. SLEEVE INSULATOR DC+ STUD		1	1	1	
22	562193	. DIODE (NEGATIF) / ALTERNATOR 50 DN		6	6	6	
23	562466	. COVER / RECTIFIER END / ALUMINUM DIE CAST		1	1	1	
24	562467	. . O-RING		1	1	1	
25	562450	. STUD TERMINAL DC +		1	1	1	
27	562242	. O-RING / SPACER COLLAR & BEARING		1	1	1	
28	562245	. SPACER COLLAR D.E.		1	1	1	
29	562243	. GASKET PLATE DRIVE END		1	1	1	
30	562244	. RETAINER BEARING D.E.		1	1	1	
31	562509	. . OIL SEAL 2.247" O.D.		1	1	1	
31	N8896697	. OIL SEAL W/FLANGE 30375" O.D.		1	1	1	
. NS	N8885631	. . O-RING / SPACER COLLAR & BEARING		1	1	1	
. NS	N8893250	. . SPACER COLLAR D.E.		1	1	1	
32	562386	. STRAP / FIELD TERMINAL & GROUND		1	1	1	
33	500163	. SCREW CAP HEX 1/4-20x3/4 G5 Z050		6	6	6	
40	510439	PULLEY ALTERNATOR 12 RIB To 3-8164		1	1	1	
40	510926	PULLEY ALTERNATOR 10 RIB From 4-8165		1	1	1	

From Y-7046 To 8-9339		Date:07/2024	PAGE:Y2-0605-52
ALTERNATOR 12V/300 AMPS / "DELCO" #562355			

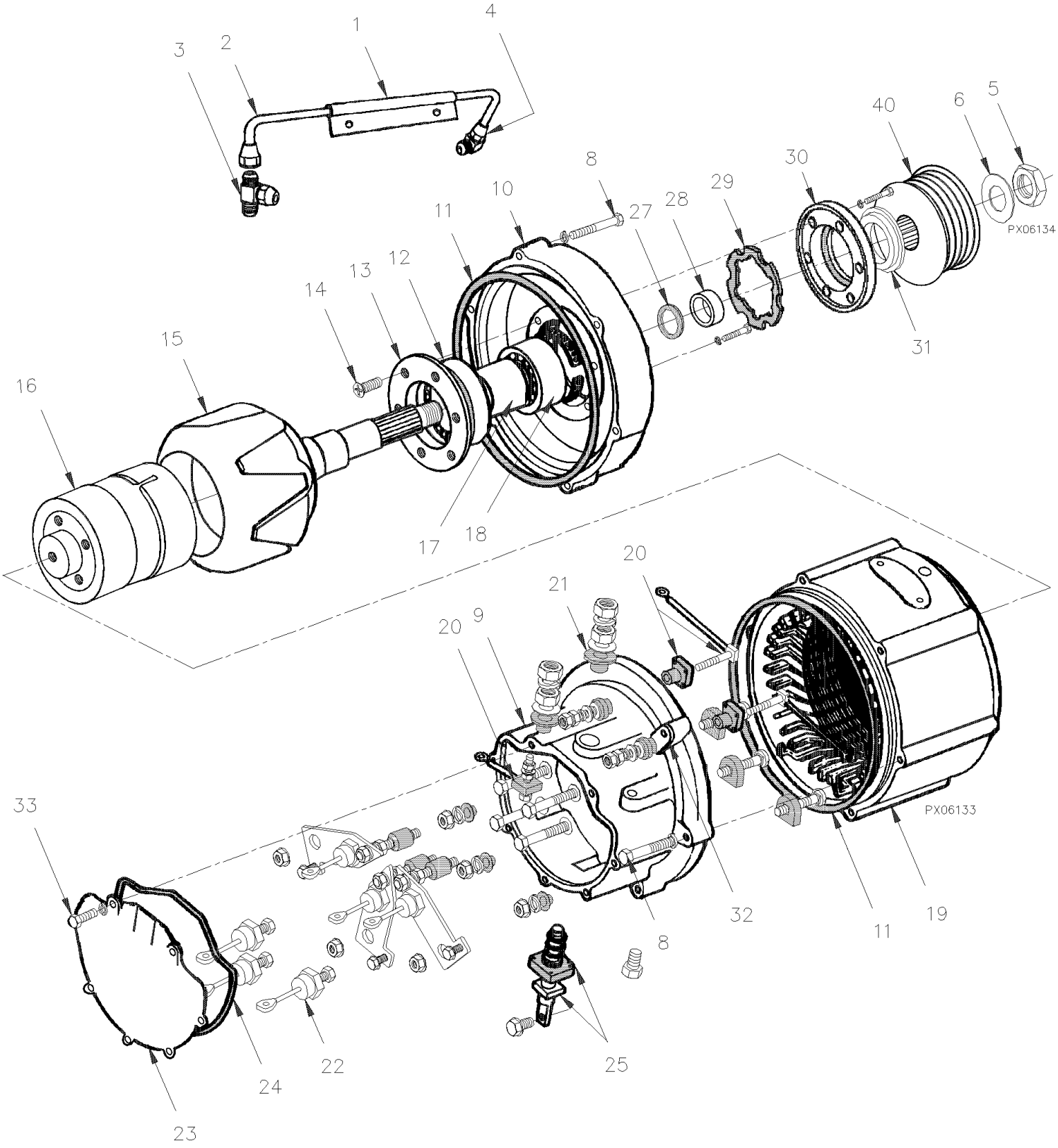

From Y-7046 To 8-9339		Date:07/2024	PAGE:Y2-0605-52

ALTERNATOR 12V/300 AMPS / "DELCO" #562355

Item#	Part	Description	XLII 45	XLII MTH40	XLII MTH45	XLII MTH45E	NOTES
	562355	ALTERNATOR ASSY 12V/300 AMPS /		1	1	1	
1	561169	. CLAMP / OIL LINE TUBE		1	1	1	
2	562238	. OIL LINE TUBE		1	1	1	
3	561171	. TEE		1	1	1	
4	561170	. ELBOW 90°		1	1	1	
5	562457	. NUT, DRIVE END		1	1	1	
6	560973	. WASHER / PINION		1	1	1	
8	500170	. SCREW CAP HEX 1/4-20x2 G5 PT Z050		12	12	12	
NS	500473	. WASHER LO SPT .262x.489x.062 Z050		12	12	12	
9	N8885614	. FRAME RECTIFIER END		1	1	1	
10	562241	. FRAME D.E.		1	1	1	
. NS	562509	. . OIL SEAL 2.247" O.D.		1	1	1	
10	10523585	. FRAME D.E.		1	1	1	
11	562196	. O-RING		2	2	2	
12	562186	. BEARING INNER D.E.		1	1	1	
13	N8885671	. RETAINER BEARING (1941060)		1	1	1	
14	500371	. SCREW MA FL PH M4-0.7x8 N500		6	6	6	
15	562240	. ROTOR		1	1	1	
16	562448	. FIELD ASSY		1	1	1	
18	562184	. BEARING OUTER D.E.		1	1	1	
19	562449	. STATOR ASSY / W/RIGID LEAD		1	1	1	
20	560724	. STUD TERMINAL FIELD		2	2	2	
21	560846	. SLEEVE INSULATOR DC+ STUD		1	1	1	
22	562193	. DIODE (NEGATIF) / ALTERNATOR 50 DN		6	6	6	
23	562466	. COVER / RECTIFIER END / ALUMINUM DIE CAST		1	1	1	
24	562467	. . O-RING		1	1	1	
25	562450	. STUD TERMINAL DC +		1	1	1	
27	562242	. O-RING / SPACER COLLAR & BEARING		1	1	1	
28	562245	. SPACER COLLAR D.E.		1	1	1	
29	562243	. GASKET PLATE DRIVE END		1	1	1	
30	562244	. RETAINER BEARING D.E.		1	1	1	
31	562509	. . OIL SEAL 2.247" O.D.		1	1	1	
31	N8896697	. OIL SEAL W/FLANGE 30375" O.D.		1	1	1	
. NS	N8885631	. . O-RING / SPACER COLLAR & BEARING		1	1	1	
. NS	N8893250	. . SPACER COLLAR D.E.		1	1	1	
32	562386	. STRAP / FIELD TERMINAL & GROUND		1	1	1	
33	500163	. SCREW CAP HEX 1/4-20x3/4 G5 Z050		6	6	6	
40	510439	PULLEY ALTERNATOR 12 RIB To 3-8164		1	1	1	
40	510926	PULLEY ALTERNATOR 10 RIB From 4-8165		1	1	1	

From Y-7046 To 3-8164		Date:07/2024	PAGE:Y2-0610-00
ALTERNATOR MOUNTING / "BOSCH" WITH DETROIT S-60			

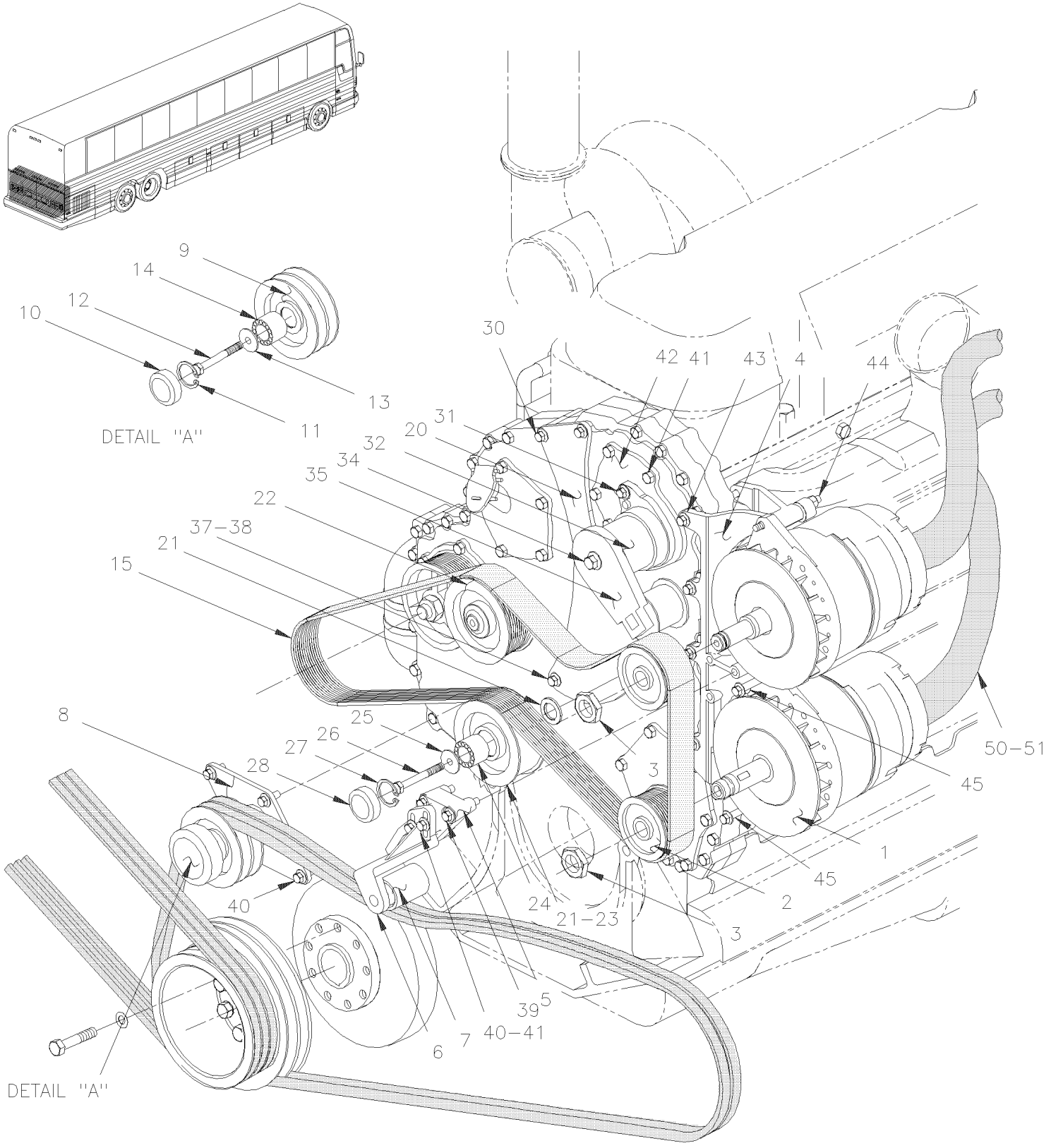

From Y-7046 To 3-8164		Date:07/2024	PAGE:Y2-0610-00

ALTERNATOR MOUNTING / "BOSCH" WITH DETROIT S-60

Item#	Part	Description	XLII 45	XLII MTH40	XLII MTH45	XLII MTH45E	NOTES
1	562752	ALTERNATOR ASSY 24V/140 AMPS	2				
1	562752	ALTERNATOR ASSY 24V/140 AMPS From 2-7908				2	
2	065465	PULLEY ALTERNATOR / "BOSCH" / 12 RIB	2			2	
3	N.S.P.	NUT	1			1	2
4	510663	SUPPORT ALTERNATOR MOUNTING	1			1	
5	012064	ADAPTOR SNUBBER MOUNTING	1			1	
6	012063	SNUBBER ASSY	1			1	
6	N.S.P.	. SUPPORT / (23522973)	1			1	2
7	N.S.P.	. ROLLER / (23512825)	1			1	2
7	N.S.P.	. BEARING / (907394)	1			1	2
8	012058	PULLEY ASSY IDLER	1			1	
8	N.S.P.	. SUPPORT / (23521658)	1			1	2
9	N.S.P.	. PULLEY / (23519390)	1			1	2
10	N.S.P.	. PROTECTOR CAP / (05107293)	1			1	2
10	510798	PROTECTOR CAP / "PREVOST"	1			1	B
11	N.S.P.	. SNAP RING / (23518223)	1			1	2
12	5001308	. SCREW CAP HEXF M10-1.5x40 G10.9 N500	1			1	
13	N.S.P.	. WASHER / (23518224)	1			1	2
13	N.S.P.	SEAL / (23520961)	1			1	2
14	510618	. BALL BEARING DBL ROW / 30MM x 62MM x 27 W	1			1	
15	506865	MULTI V-BELT / 12 RIB 81 ½" 208585	1			1	
15	506669	MULTI V-BELT / 12 RIB 72" (1830) 23521337	1			1	A
20	012065	IDLER PULLEY ASSY	1			1	
21	N.S.P.	. SEAL / (CR 14960) / (23521013)	2			2	2
22	N.S.P.	. PULLEY IDLER 12G / 5"1/4 O.D. / (23520994)	1			1	2
23	N.S.P.	. PULLEY BELT TENSIONER / 5 1/4 O.D. / (23520999)	2			2	2
24	N.S.P.	. BALL BEARING DBL ROW / 30MM x 62MM x 27 W	1			1	2
25	N.S.P.	. WASHER / (23518224)	1			1	2
26	5001308	. SCREW CAP HEXF M10-1.5x40 G10.9 N500	2			2	
26	510627	. BOLT M10-1.5 X 45MM LH G10.9	1			1	
27	N.S.P.	. BEARING DBL ROW / (30BGS1D53) / (23518189)	1			1	2
28	N.S.P.	. PROTECTOR CAP / 05107293)	2			2	2
28	510798	PROTECTOR CAP / "PREVOST"	1			1	B
30	975104	SCREW CAP HEXF M10-1.5x85 G10.9 PHC	2			2	
31	969445	SCREW CAP HEXF M10-1.5x30 G10.9 PHC	1			1	
32	012103	AUTOMATIC TENSIONER ASSY	1			1	
32	N.S.S.	. SPRING	2			2	1
33	N.S.S.	. PROTECTOR CAP	1			1	1
34	975104	. SCREW CAP HEXF M10-1.5x85 G10.9 PHC	1			1	
35	N.S.S.	. LEVER	1			1	1
36	N.S.S.	. PULLEY	1			1	1
36	N.S.S.	. BEARING	1			1	1

From Y-7046 To 3-8164		Date:07/2024	PAGE:Y2-0610-00

ALTERNATOR MOUNTING / "BOSCH" WITH DETROIT S-60

Item#	Part	Description	XLII 45	XLII MTH40	XLII MTH45	XLII MTH45E	NOTES
36	N.S.S.	. PROTECTOR CAP	1			1	1
37	975121	SCREW CAP HEXF M14-2.0x50 G10.9 PHC	1			1	
38	975124	SCREW CAP HEXF M14-2.0x80 G10.9 PHC	1			1	
38	510642	STUD M14-2.0 X 92MM GR 10.9	1			1	
NS	510643	NUT HEXF M14-2.0 ZP	1			1	
39	5001595	SCREW CAP HEXF M10-1.5x60 G8.8 G500	3			3	
40	955297	SCREW CAP HEX M8-1.25x25 G8.8 ZG603	3			3	
41	510641	SCREW CAP HEXF M8-1.25x30 G10.9	5			5	
42	012104	TENSIONER, MOUNTING PLATE	1			1	
42	N.S.P.	O-RING / (8929253)	1			1	2
43	510635	SCREW CAP HEXF 7/16-14x5.50 ZP	4			4	
NS	510636	NUT HEXF 7/16-14 ZP	4			4	
44	510639	BOLT M12-1.5 X 80MM	1			1	
44	5001584	SCREW CAP HEX M12-1.5x150 G10.9 DP	1			1	
45	510637	BOLT M12-1.5 X 50MM	4			4	
NS	5001585	WASHER FL 13.5x27x2.46-4.5 DP	6			6	
NS	975111	SCREW CAP HEXF M12-1.75x50MM G10.9 PHC	1			1	
50	064981	HOSE FLEXIBLE / 2 3/4" I.D. X 1524MM	2			2	
51	504025	HOSE CLAMP / 2"5/16-3"1/4 SS / HS-44	4			4	
		A) EMERGENCY USE ONLY W/ONE ALTERNATOR					
		B) FIT ONLY WITH PULLEY SOLD BY "PREVOST"					
		1) NOT SOLD SEPARATELY					
		2) NOT SOLD BY PREVOST (SEE MANUFACTURING PART NUMBER AT END OF DESCRIPTION LINE)					

From 4-8165 To 8-9339		Date:07/2024	PAGE:Y2-0610-01
ALTERNATOR MOUNTING / "BOSCH" WITH DETROIT S-60			

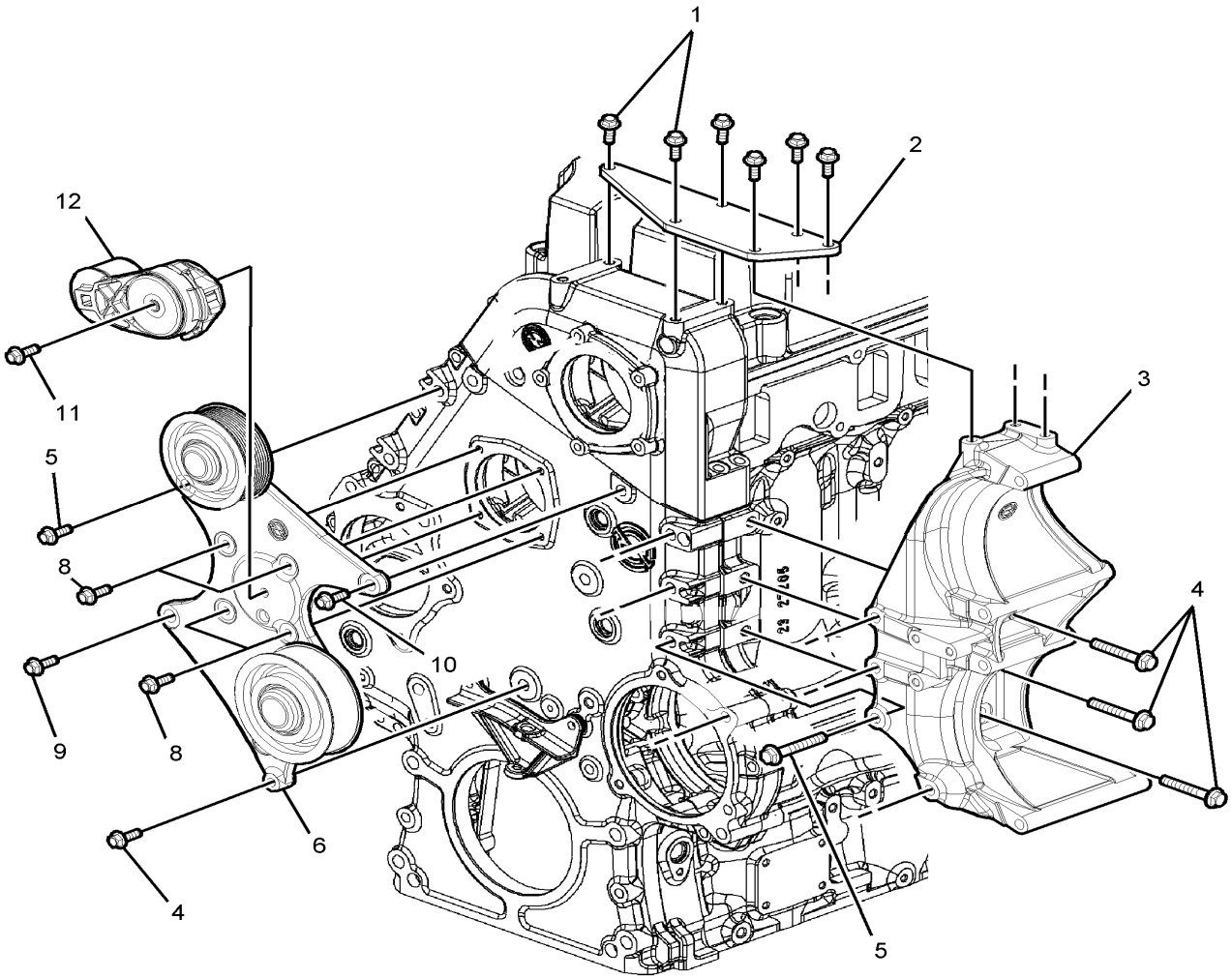

From 4-8165 To 8-9339		Date:07/2024	PAGE:Y2-0610-01
ALTERNATOR MOUNTING / "BOSCH" WITH DETROIT S-60			

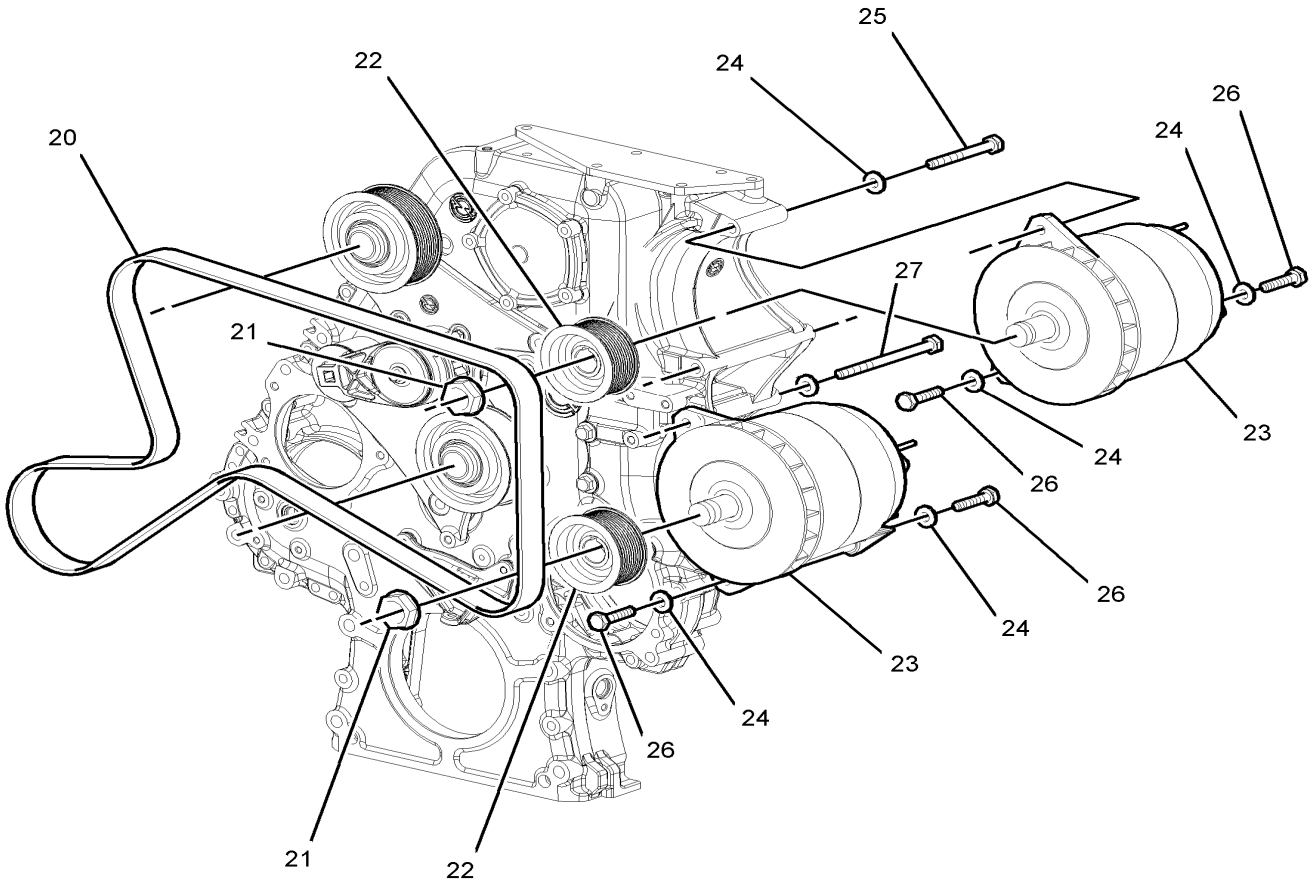

From 4-8165 To 8-9339		Date:07/2024	PAGE:Y2-0610-01
ALTERNATOR MOUNTING / "BOSCH" WITH DETROIT S-60			

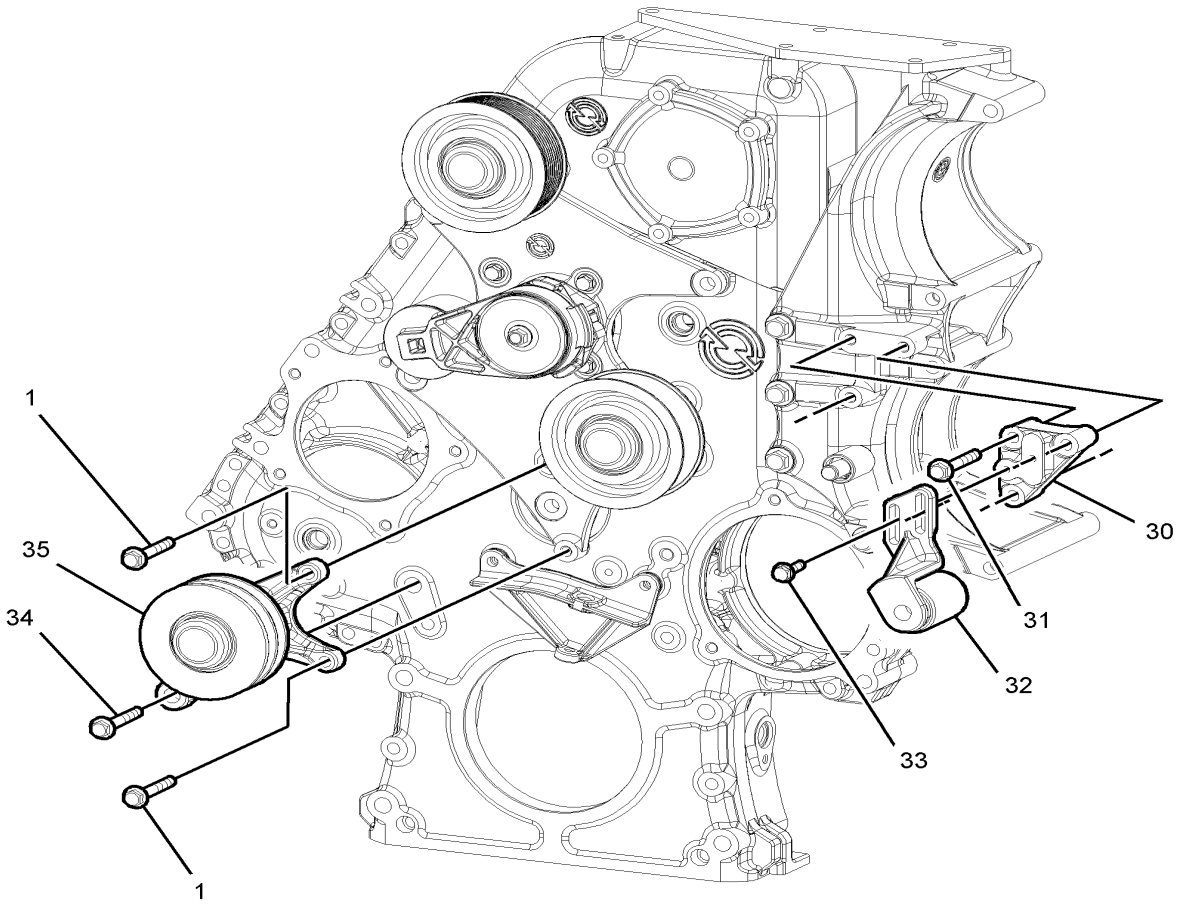

From 4-8165 To 8-9339		Date:07/2024	PAGE:Y2-0610-01

ALTERNATOR MOUNTING / "BOSCH" WITH DETROIT S-60

Item#	Part	Description	XLII 45	XLII MTH40	XLII MTH45	XLII MTH45E	NOTES
1	5001644	SCREW CAP HEXF M10-1.5x30 G8.8 G500	8			8	
2	23527310	STRAP	1			1	
3	23530258	BRACKET	1			1	
4	23528697	SCREW CAP HEXF M12-1.75x60 G10.9	4			4	
5	23528406	SCREW CAP HEXF M12-1.75x80 G10.9	6			6	
6	23530231	PULLEY ASSY FORMER	1			1	
6	23534290	PULLEY ASSY CURRENT	1			1	
8	11504822	SCREW CAP HEXF M9-1.25x30 G10.9	4			4	
9	23528698	SCREW CAP HEX M14-2.00x130 G10.9	1			1	
10	23528406	SCREW CAP HEXF M12-1.75x80 G10.9	2			2	
11	11503669	SCREW CAP HEX M10-1.50x80 G10.9	1			1	
12	012329	AUTOMATIC TENSIONER ASSY	1			1	
20	5060055	MULTI V-BELT / 10 RIB 87 7/8" (2232) 23530281	1			1	
20	5060056	MULTI V-BELT / 10 RIB 78 3/4" (2000) 23530282	1			1	A
21	563001	KIT NUT & WASHER M24-1.5 YC	2			2	
22	065835	PULLEY ALTERNATOR / "BOSCH" / 10 RIB To 4-4952	2			2	
22	066062	PULLEY ALTERNATOR / "BOSCH" / 10 RIB From 4-4953	2			2	
23	**Y2-0605-00**	**ALTERNATOR 24V/140 AMPS / "BOSCH"**					
24	23509483	WASHER	6			6	
25	23528696	SCREW CAP HEX M12-1.50x100	1			1	
26	23523176	SCREW CAP HEX M12-1.75x50	4			4	
27	23523490	SCREW CAP HEX M12-1.50x150	1			1	
30	012265	ADAPTOR SNUBBER MOUNTING To 8-9250	1			1	
30	012455	ADAPTOR SNUBBER MOUNTING From 8-9251	1			1	
31	5001595	SCREW CAP HEXF M10-1.5x60 G8.8 G500	3			3	
32	012268	SNUBBER ASSY To 8-9250	1			1	
32	012467	SNUBBER ASSY From 8-9251	1			1	D
33	5001643	SCREW CAP HEXF M8-1.25x25 G8.8 G500	2			2	
34	5001596	SCREW CAP HEXF M14-2.0x90 G8.8 MAGNI 565	1			1	
35	012269	PULLEY ASSY IDLER To 8-9250	1			1	
35	012466	PULLEY ASSY IDLER From 8-9251	1			1	D
		A) EMERGENCY USE ONLY WITH ONE ALTERNATOR					
		D) SEE DETAIL AT PAGE Y2-0120-00					

From Y-7046 To 3-8164		Date:07/2024	PAGE:Y2-0610-50
ALTERNATOR MOUNTING / "DELCO" WITH DETROIT S-60			

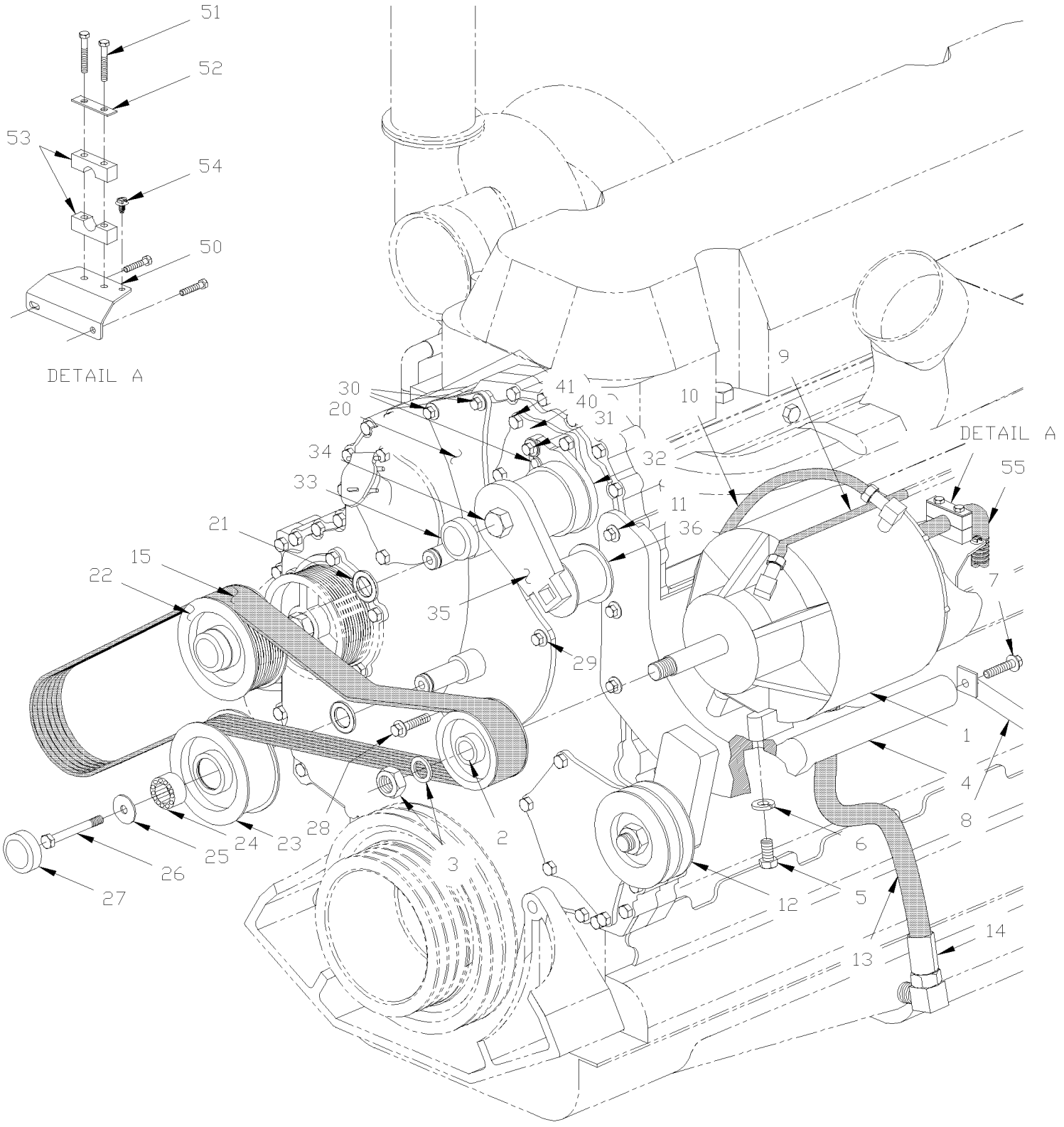

From Y-7046 To 3-8164		Date:07/2024	PAGE:Y2-0610-50

ALTERNATOR MOUNTING / "DELCO" WITH DETROIT S-60

Item#	Part	Description	XLII 45	XLII MTH40	XLII MTH45	XLII MTH45E	NOTES
1	562235	ALTERNATOR ASSY 24V/270 AMPS To 4-8313		1	1	1	
NS	562355	ALTERNATOR ASSY 12V/300 AMPS /		1	1	1	
1	563437	ALTERNATOR ASSY 24V/270 AMPS From 4-8314		1	1	1	
2	510439	PULLEY ALTERNATOR 12 RIB		1	1	1	
3	**Y2-0605-51**	**ALTERNATOR 24V/270 AMPS / "DELCO" #562235**					
4	N.S.P.	SUPPORT ALTERNATOR MOUNTING / (23521128)		1	1	1	2
4	N.S.P.	KEY, WOODRUFF 3/16" X 7/8" / (120502)		2	2	2	2
5	N.S.P.	BOLT 1/2-13 X 2.00" / (00455001)		2	2	2	2
5	N.S.P.	BOLT 1/2-13 X 2.25" / (00186631)		2	2	2	2
6	N.S.P.	WASHER LO SPT ZP / (5132715)		4	4	4	2
7	N.S.P.	BOLT FLG M12-1.75 X 30MM / TO FIX BRACE / (11509528)		4	4	4	2
7	N.S.P.	BRACKET ALTERNATOR SUPPORT / ON BLOCK / (23511744)		1	1	1	2
7	N.S.P.	BOLT FLG M10-1.5 X 30MM / TO FIX SUPPORT ON BLOCK (11505299)		3	3	3	2
8	N.S.P.	BRACE ALTERNATOR SUPPORT / (23511743)		1	1	1	2
9	N.S.P.	HOSE ASSY 25.25" / #5 TEFLON OIL SUPPLY / (23504343)		1	1	1	2
10	N.S.P.	HOSE ASSY 21" / #4 ALT VENT TOP OF ALTERNATOR / (5133163)		1	1	1	2
11	N.S.P.	BOLT FLG 7/16-14 X 5.75 / (23521130)		2	2	2	2
11	N.S.P.	BOLT FLG 7/16-14 X 5.50 / (23521132)		1	1	1	2
11	N.S.P.	NUT FLG 7/16-14 / (23521131)		3	3	3	2
12	**Y2-0120-50**	**DRIVE PULLEY & BELTS - MTH**					
13	N.S.P.	HOSE ASSY 23.40" / #16 OIL DRAIN / (23517561)		1	1	1	2
13	N.S.P.	CONNECTOR 1" NPT 1" TUBE / OIL DRAIN / (09402713)		1	1	1	2
14	N.S.P.	ELBOW 90° 3/4" NPT 1" TUBE / OIL DRAIN / (02492119)		1	1	1	2
15	506782	MULTI V-BELT / 12 RIB 73" (1854) 23521000		1	1	1	
20	N.S.P.	IDLER PULLEY ASSY / (23520959)		1	1	1	2
21	N.S.P.	. SEAL / (CR 14960) / (23521013)		2	2	2	2
22	N.S.P.	. PULLEY IDLER 12G / 5 1/4" O.D. / (23520994)		1	1	1	2
23	N.S.P.	. PULLEY BELT TENSIONER / 5 1/4 O.D. / (23520999)		1	1	1	2
24	N.S.P.	. BEARING DBL ROW / (30BGS1D53) / (23518189)		1	1	1	2
25	N.S.P.	. WASHER / (23518224)		2	2	2	2
26	N.S.P.	. BOLT M10-1.5 X 45MM G10.9 / (23518303)		2	2	2	2
26	510627	. BOLT M10-1.5 X 45MM LH G10.9		1	1	1	
27	N.S.P.	. PROTECTOR CAP / (05107293)		2	2	2	2
28	N.S.P.	BOLT FLG M14-2.0 X 50MM / (23511779)		1	1	1	2
29	N.S.P.	BOLT FLG M14-2.0 X 80MM / (23511257)		2	2	2	2
30	N.S.P.	BOLT FLG M10-1.5 X 85MM / (23505050)		3	3	3	2
31	N.S.P.	BOLT FLG M10-1.5 X 30MM / (23511786)		1	1	1	2
32	N.S.P.	AUTOMATIC TENSIONER / (23521020)		1	1	1	2
32	N.S.S.	. SPRING		2	2	2	1
33	N.S.S.	. PROTECTOR CAP		1	1	1	1
34	N.S.S.	. BOLT		1	1	1	1
35	N.S.S.	. LEVER		1	1	1	1

From Y-7046 To 3-8164		Date:07/2024	PAGE:Y2-0610-50

ALTERNATOR MOUNTING / "DELCO" WITH DETROIT S-60

Item#	Part	Description	XLII 45	XLII MTH40	XLII MTH45	XLII MTH45E	NOTES
36	N.S.S.	. PULLEY		1	1	1	1
36	N.S.S.	. BEARING		1	1	1	1
36	N.S.S.	PROTECTOR CAP		1	1	1	1
40	N.S.P.	TENSIONNER, MOUNTED / (23520920)		1	1	1	2
40	N.S.P.	O-RING / (8929253)		1	1	1	2
41	N.S.P.	BOLT FLG M8-1.25X30 / (11504822)		5	5	5	2
50	065693	SUPPORT, DELCO ALT HARNESS From 2-7891		1	1	1	A
51	500170	SCREW CAP HEX 1/4-20x2 G5 PT Z050 From 2-7891		2	2	2	A
52	504614	PLATE RETAINING / COLLAR From 2-7891		1	1	1	A
53	504703	COLLAR 1/2" I.D. / TO FIX HOSE From 2-7891		1	1	1	A
54	509815	TIE MOUNT / ATTACHMENT W/TREE MOUNT From 2-7891		2	2	2	A
NS	504637	CABLE TIE / 3/16" x 13" From 2-7891		AR	AR	AR	A
55	065701	CABLE ASSY #102 From 2-7891		1	1	1	A
NS	065696	KIT, RETROFIT HARNESS SUPPORT W/"DELCO" ALT To 2-7890		AR	AR	AR	
		A) FOR PRODUCT IMPROVEMENT ASK FOR KIT #065696 INCLUDE ALL THOSE PARTS					
		1) NOT SOLD SEPARATELY					
		2) NOT SOLD BY PREVOST (SEE MANUFACTURING PART NUMBER AT END OF DESCRIPTION LINE)					

From Y-7046 To 8-9339		Date:07/2024	PAGE:Y2-0610-51
ALTERNATOR MOUNTING / 12V & 24V - MTH			

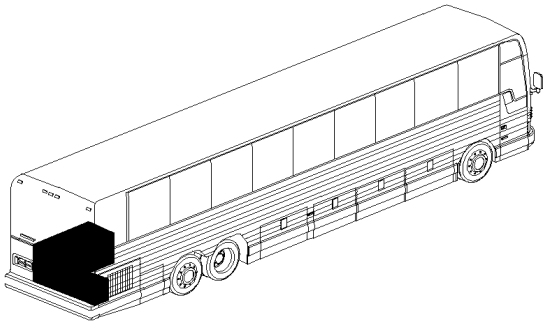

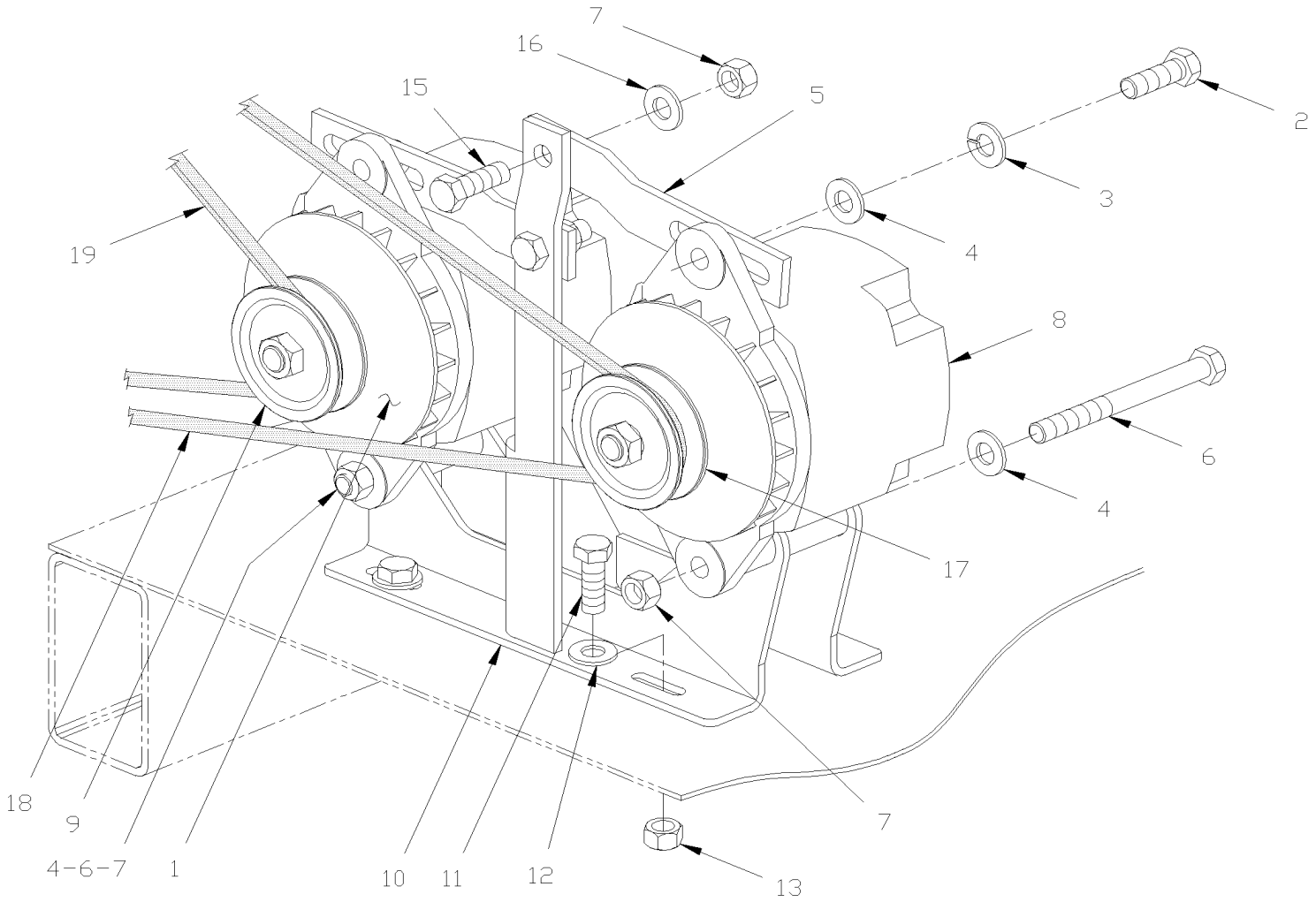

From Y-7046 To 8-9339		Date:07/2024	PAGE:Y2-0610-51

ALTERNATOR MOUNTING / 12V & 24V - MTH

Item#	Part	Description	XLII 45	XLII MTH40	XLII MTH45	XLII MTH45E	NOTES
1	562326	ALTERNATOR ASSY 24V/75 AMPS		1	1	1	
NS	562612	ALTERNATOR ASSY 24V/100 AMPS / PRESTOLITE				1	
2	500214	SCREW CAP HEX 1/2-13x1 1/4 G5 Z050		2	2	2	
3	500482	WASHER LO SPT .506x.873x.125 Z050		2	2	2	
4	500547	WASHER FL .484x.750x.031 ZP		2	2	2	
5	061531	TENSIONNER		2	2	2	
6	500106	SCREW CAP HEX 1/2-20x6 G5 PT Z050		2	2	2	
7	500718	NUT HEX STO 1/2-20 Z050		3	3	3	
8	562911	ALTERNATOR ASSY 12V/145 AMPS / LEECE-NEVILLE		1	1	1	
8	563523	ALTERNATOR ASSY 14V/160 AMPS / PRESTOLITE		1	1	1	
9	062418	PULLEY ALTERNATOR / W/1V x 3 ¼" O.D. To 4-4952		1	1	1	
9	066065	PULLEY ALTERNATOR / W/1V x 3 ¼" O.D. From 4-4953		1	1	1	
9	562926	PULLEY 3.3" O.D. / W/ "LEECE-NEVILLE"		1	1	1	
NS	500420	WASHER FL .938x1.750x.134 ZP		1	1	1	
NS	5001426	WASHER FL .875x1.375x.047 STL KEYWAY		3	3	3	
10	064455	SUPPORT / ALTERNATOR To 2-7809		1	1	1	
10	065616	SUPPORT / ALTERNATOR From 2-7810 To 4-8220		1	1	1	
10	065887	SUPPORT / ALTERNATOR From 4-8221		1	1	1	
NS	505213	SHIM 1/16" THICK		AR	AR	AR	
NS	062362	SHIM / .067" THICK		AR	AR	AR	
NS	062361	SHIM / .082" THICK		AR	AR	AR	
11	955535	SCREW CAP HEX 3/8-16x1 1/4 G5 ZG603		4	4	4	
12	500832	WASHER FL .406x.812x.065 N500		8	8	8	
13	500208	NUT HEX STO 3/8-16 N500		4	4	4	
15	500088	SCREW CAP HEX 1/2-20x1 1/2 G5 ZP		1	1	1	
16	500446	WASHER FL .531x1.250x.125 Z050		1	1	1	
17	060697	PULLEY ALTERNATOR / W/1V x 4" O.D.		1	1	1	
18	506760	V-BELT / BX-97 9013-2097		1	1	1	
19	506680	V-BELT / BX-80 9013-2080		1	1	1	E
19	506708	V-BELT / BX-77 9013-2077		1	1	1	D
		D) USE WITH PULLEY MOUNTED ON ALTERNATOR SUPPORT "DELCO" MODEL 50DN MOUNTED ON ENGINE "OPTION". (NEIHOFF)					
		E) USE WITH PULLEY MOUNTED ON SMALL SUPPORT FIXED AT ENGINE.					

From Y-7046 To 8-9339		Date:07/2024	PAGE:Y2-0610-52
ALTERNATOR MOUNTING / 12V & 24V - MTH / GEARBOX INSTAL			

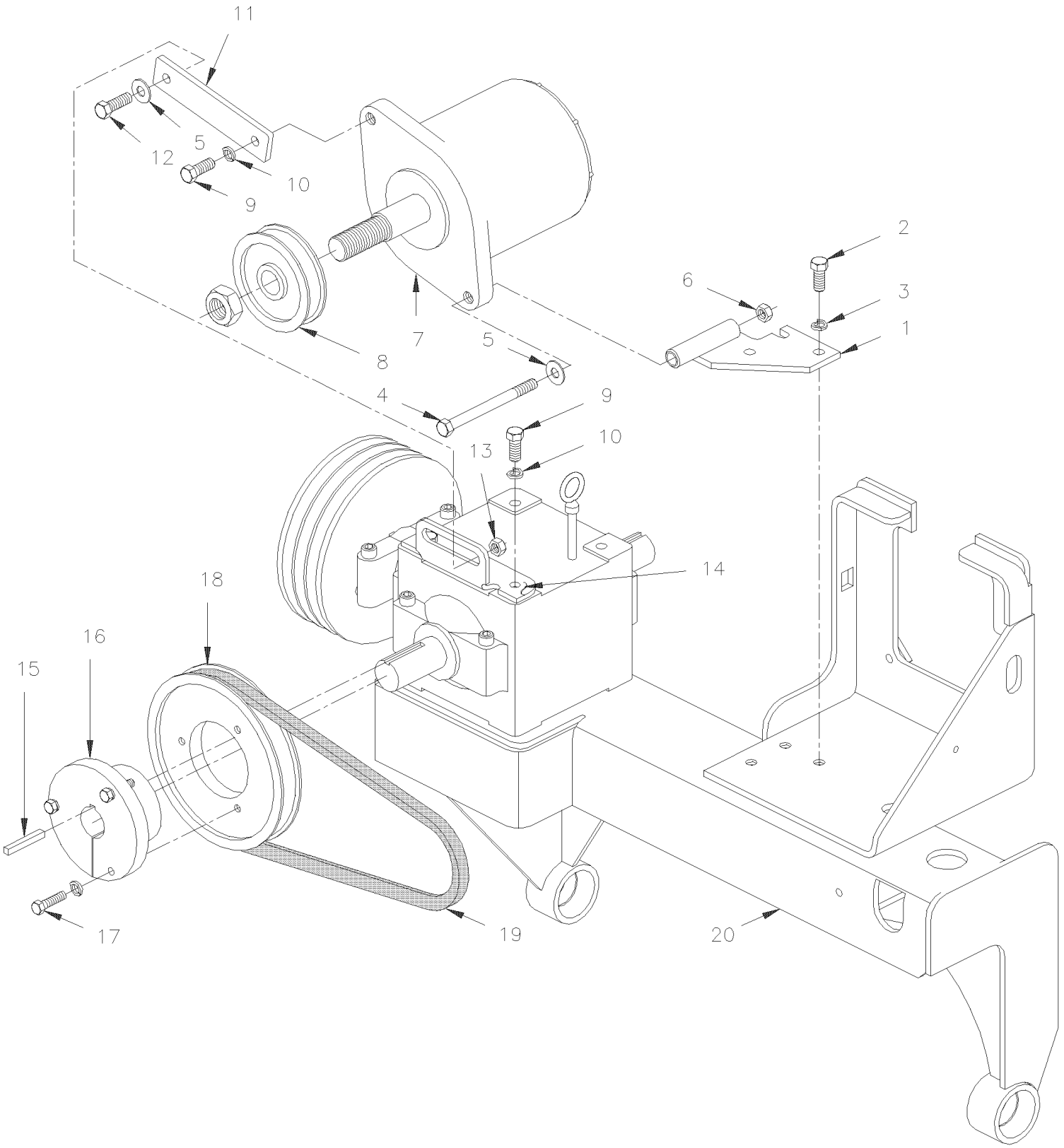

From Y-7046 To 8-9339		Date:07/2024	PAGE:Y2-0610-52

ALTERNATOR MOUNTING / 12V & 24V - MTH / GEARBOX INSTAL

Item#	Part	Description	XLII 45	XLII MTH40	XLII MTH45	XLII MTH45E	NOTES
1	063777	PIVOT ASSY / SUPPORT		1	1	1	
NS	063855	SPACER SS 16GA / BETWEN GEAR BOX & PIVOT		1	1	1	
NS	067526	SUPPORT PIVOT ALTERNATOR		1	1	1	RF
NS	067529	SUPPORT ALTERNATOR LOWER "BOSCH" 12V		1	1	1	RF
NS	067524	SUPPORT ALTERNATOR UPPER "BOSCH" 12V		1	1	1	RF
2	502559	SCREW CAP HEX M10-1.5x25 G8.8 Z050		3	3	3	
3	500257	WASHER LO SPT 10.2x18.1x2.2 Z050		3	3	3	
NS	502525	WASHER FL .484x.750x.031 Z050		3	3	3	
4	500106	SCREW CAP HEX 1/2-20x6 G5 PT Z050		1	1	1	
5	571351	WASHER, 1/2" I.D. FLAT		2	2	2	
6	500718	NUT HEX STO 1/2-20 Z050		1	1	1	
7	562612	ALTERNATOR ASSY 24V/100 AMPS / PRESTOLITE		1	1	1	
7	562911	ALTERNATOR ASSY 12V/145 AMPS / LEECE-NEVILLE		1	1	1	R
7	563523	ALTERNATOR ASSY 14V/160 AMPS / PRESTOLITE		1	1	1	
7	563734	ALTERNATOR ASSY 12V/200AMPS / HD10E 200A 14V		1	1	1	RF
8	562926	PULLEY 3.3" O.D. / W/ "LEECE-NEVILLE"		1	1	1	
8	5001426	WASHER FL .875x1.375x.047 STL KEYWAY		1	1	1	
8	067065	PULLEY ALTERNATOR "BOSCH" / W/ 2V x 82.5MM OD		1	1	1	RF
NS	067208	PROTECTOR PULLEY PLASTIC BLACK		1	1	1	RF
9	500213	SCREW CAP HEX 1/2-13x1 G5 Z050		3	3	3	
10	500482	WASHER LO SPT .506x.873x.125 Z050		3	3	3	
11	063779	TENSIONER 154MM C/C To 3-8164		1	1	1	
11	065995	TENSIONER 254MM C/C From 4-8165		1	1	1	
11	067523	TENSIONER 77.3 MM C/C		1	1	1	RF
12	500214	SCREW CAP HEX 1/2-13x1 1/4 G5 Z050		1	1	1	
13	500968	NUT HEX STO 1/2-13 Z050		3	3	3	
14	452443	TENSIONER BRACKET / GEARBOX		1	1	1	RF
15	550186	KEY 1/4" X 1/4" X 1 1/4"		1	1	1	
15	550293	KEY 1/4" X 1/4" X 1 13/16"		1	1	1	RF
16	950230	CONE BUSHING 1 1/4 I.D X 2 1/8 O.D. X 3 5/16 To 4-4952		1	1	1	
16	950387	CONE BUSHING 1 1/4 I.D X 2 1/8 O.D. X 3 5/16 From 4-4953		1	1	1	
16	950389	CONE BUSHING 1 1/4 I.D X 2 1/8 O.D. X 3 5/16		1	1	1	RF
17	500167	SCREW CAP HEX 1/4-20x1 1/4 G5 PT Z050		3	3	3	
NS	500473	WASHER LO SPT .262x.489x.062 Z050		3	3	3	
18	950211	PULLEY DRIVE 7.15 O.D. / SINGLE "V" To 4-4952		1	1	1	
18	950386	PULLEY DRIVE 7.15 O.D. / SINGLE "V" From 4-4953		1	1	1	
18	950392	PULLEY DRIVE 7.25 O.D. / DOUBLE "V"		1	1	1	RF
19	506683	V-BELT / BX-31 9013-2031 To 3-8164		1	1	1	
19	5060058	V-BELT / BX-35 9013-2035 From 4-8165		1	1	1	
19	5060100	V-BELT / AX-32 9012-2032		1	1	1	RF
20	**Y2-0520-00**	**FAN DRIVE - INSTALLATION - SHORT To 3-8164**					
20	**Y2-0520-01**	**FAN DRIVE - INSTALLATION - SHORT From 4-8165**					

From Y-7046 To 8-9339		Date:07/2024	PAGE:Y2-0610-52

ALTERNATOR MOUNTING / 12V & 24V - MTH / GEARBOX INSTAL

Item#	Part	Description	XLII 45	XLII MTH40	XLII MTH45	XLII MTH45E	NOTES
30	067513	KIT, RETROFIT 12V-200AMPS ALTERNATOR		1	1	1	
. NS	IS-07038	. SEE INSTRUCTION SHEET		1	1	1	
31	IS-07038	SEE INSTRUCTION SHEET		1	1	1	RF
		R) FOR PRODUCT IMPROVEMENT ASK FOR KIT # 067513 KIT 12V-200AMPS "BOSCH"					
		RF) THIS PARTS ARE INCLUDE IN RETROFIT KIT # 067513					

From 6-8864 To 8-9339		Date:07/2024	PAGE:Y2-0610-54
ALTERNATOR MOUNTING / "BOSCH" - 24V/140A / GEARBOX INSTAL			

MTH-45 WITH SMALL A/C COMPRESSOR

INSTALLATION SEE PAGE Y2-2245-11

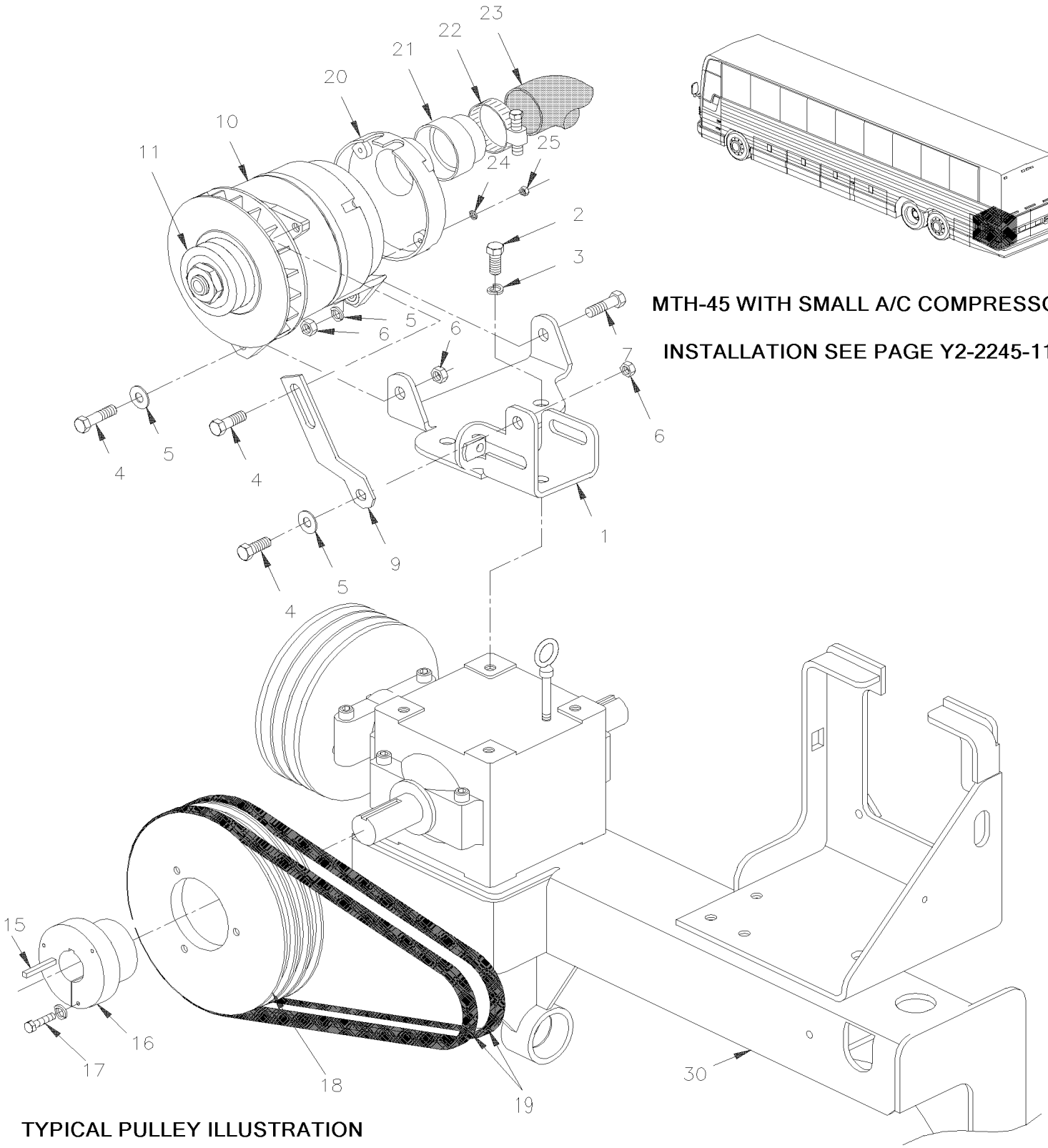

TYPICAL PULLEY ILLUSTRATION

From 6-8864 To 8-9339		Date:07/2024	PAGE:Y2-0610-54

ALTERNATOR MOUNTING / "BOSCH" - 24V/140A / GEARBOX INSTAL

Item#	Part	Description	XLII 45	XLII MTH40	XLII MTH45	XLII MTH45E	NOTES
1	066496	SUPPORT ALTERNATOR & A/C COMPRESSOR			1		S
NS	066184	SPACER 35MM X 25.4 O.D. x 12.7 I.D.			3		A
2	500217	SCREW CAP HEX 1/2-13x2 1/2 G5 CP			3		
3	500482	WASHER LO SPT .506x.873x.125 Z050			3		
4	502731	SCREW CAP HEX M12-1.75x40 G8.8 Z050			3		
5	500958	WASHER FL .531x1.062x.095 SS			4		
6	500811	NUT HEX STO M12-1.75 G500			4		
7	5001043	SCREW CAP HEX M12-1.75x50 G8.8 Z050			1		
9	066495	TENSIONNER			1		
10	**Y2-0605-00**	**ALTERNATOR 24V/140 AMPS / "BOSCH"**					
11	064543	PULLEY ALTERNATOR "BOSCH" / W/ 1Vx 88.9MM O.D.			1		
13	500968	NUT HEX STO 1/2-13 Z050			1		
15	550293	KEY 1/4" X 1/4" X 1 13/16"			1		
16	950398	CONE BUSHING 1 1/4 I.D X 2 1/8 O.D. X 3 5/16			1		
17	500167	SCREW CAP HEX 1/4-20x1 1/4 G5 PT Z050			3		
18	950397	PULLEY DRIVE 7.15 O.D. / TRIPLE "V"			1		
19	5060072	V-BELT / B-33 / SET OF 3 9003-2033			AR		
20	562851	AIR-INTAKE COVER			1		
NS	504421	GROMMET / .625x.875x.187x.437x1.125			2		
21	064552	ADAPTOR			1		
22	504025	HOSE CLAMP / 2"5/16-3"1/4 SS / HS-44			1		
23	503674	HOSE FLEXIBLE / AIR DUCT 2 1/2" I.D. X 25`			AR		
NS	454149	SUPPORT HOSE			1		
NS	502622	SCREW CAP HEX M6-1.0x20 SS BK			2		B
NS	5001608	WASHER BEL SPR 6.2x15.0x0.7 G500			2		B
24	502570	WASHER LO SPT 6.1x11.8x1.6 SS			4		
25	502565	NUT HEX M6-1.0 SS			4		
30	**Y2-0520-50**	**FAN DRIVE - INSTALLATION - LONG To 6-8814**					
30	**Y2-0520-51**	**FAN DRIVE - INSTALLATION - LONG From 6-8815**					
31	**Y2-2245-11**	**A/C COMPRESSOR SMALL - INSTALLATION**					
		A) BETWEEN SUPPORT & GEARBOX					
		B) TO FIX HOSE SUPPORT					
		S) AS SHOWN					

From 4-8165 To 8-9339		Date:07/2024	PAGE:Y2-0610-55
ALTERNATOR MOUNTING / "DELCO" WITH DETROIT S-60			

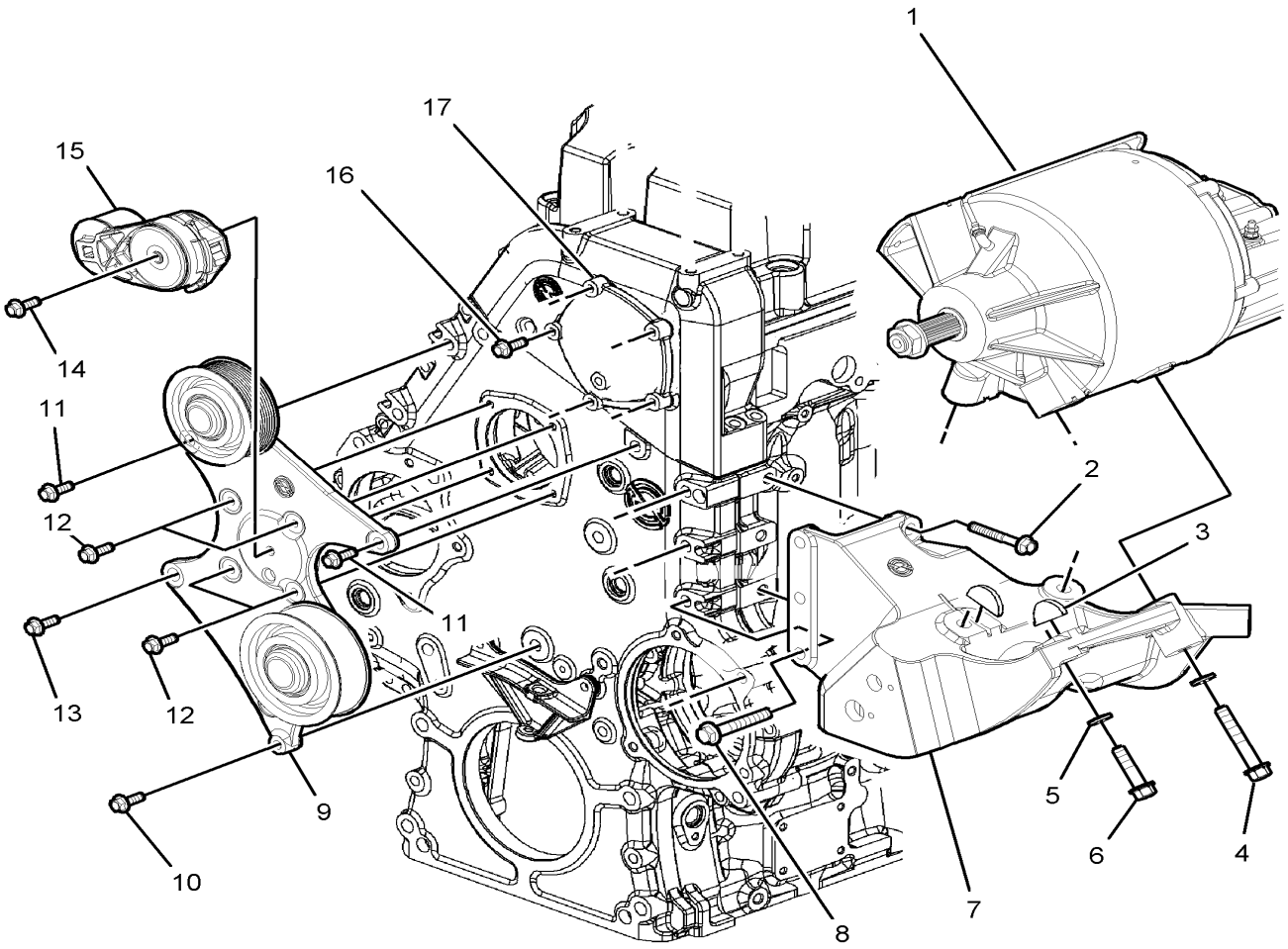

From 4-8165 To 8-9339		Date:07/2024	PAGE:Y2-0610-55
ALTERNATOR MOUNTING / "DELCO" WITH DETROIT S-60			

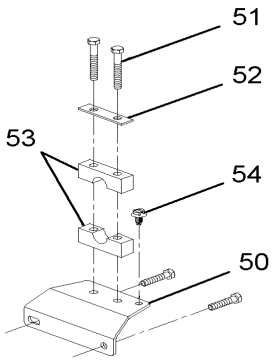

DETAIL A

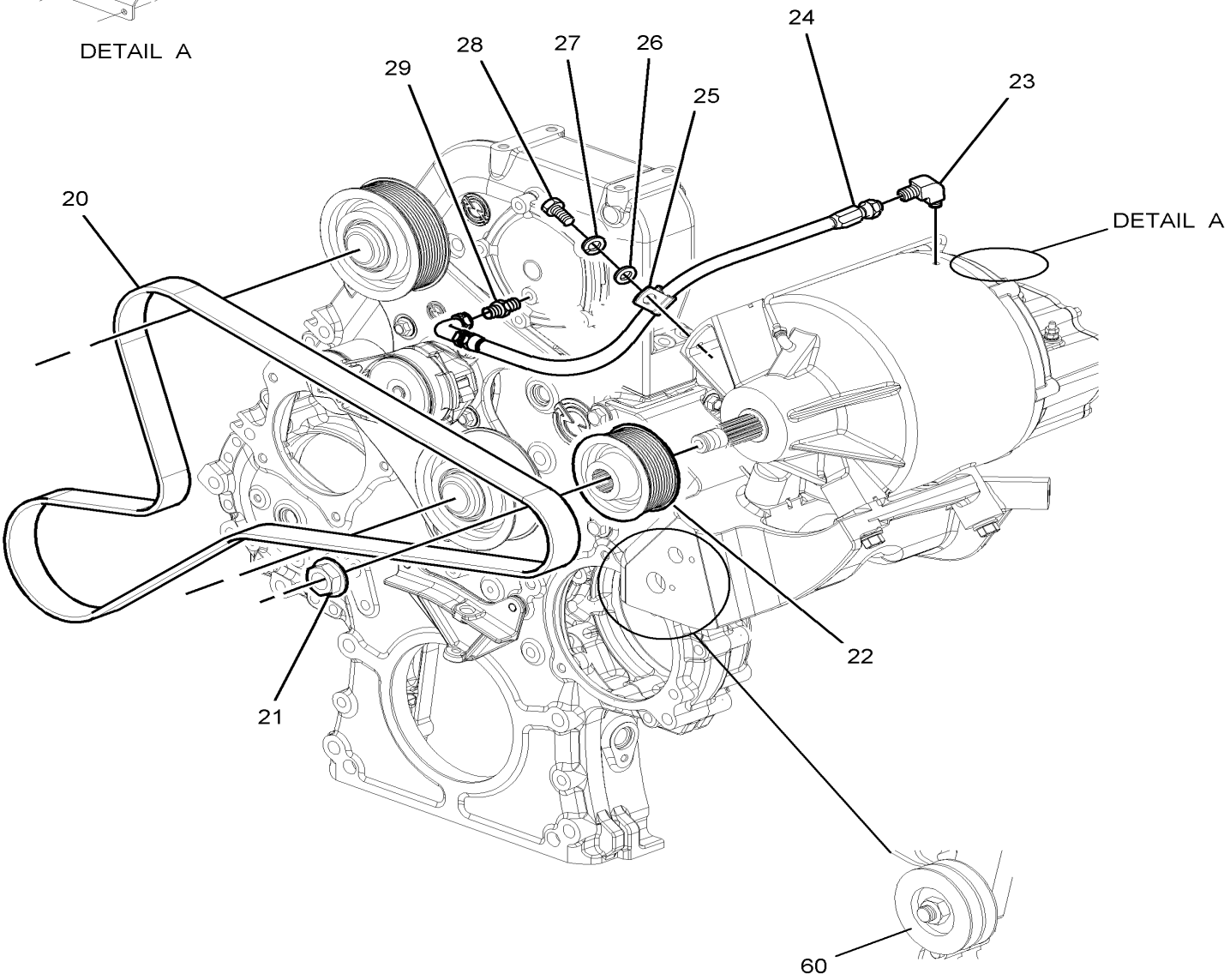

From 4-8165 To 8-9339		Date:07/2024	PAGE:Y2-0610-55
ALTERNATOR MOUNTING / "DELCO" WITH DETROIT S-60			

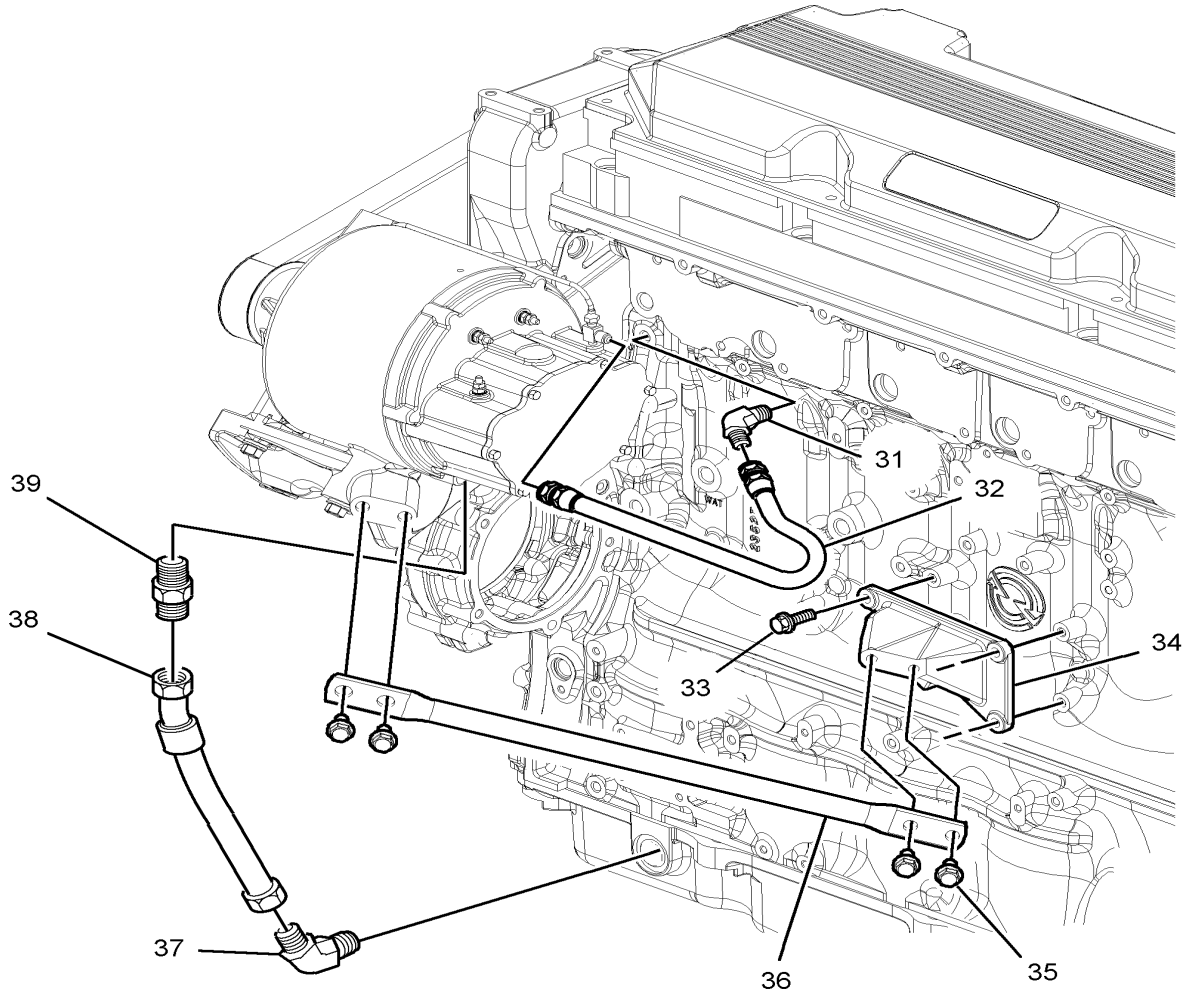

From 4-8165 To 8-9339		Date:07/2024	PAGE:Y2-0610-55

ALTERNATOR MOUNTING / "DELCO" WITH DETROIT S-60

Item#	Part	Description	XLII 45	XLII MTH40	XLII MTH45	XLII MTH45E	NOTES
1	**Y2-0605-51**	**ALTERNATOR 24V/270 AMPS / "DELCO" #562235**					
1	**Y2-0605-52**	**ALTERNATOR 12V/300 AMPS / "DELCO" #562355**					
2	23509520	SCREW CAP HEXF M12-1.75x47		2	2	2	
3	00120502	KEY, WOODRUFF 3/16" X 7/8"		2	2	2	
4	179893	SCREW CAP HEX 1/2-13x3.00		1	1	1	
5	5132715	WASHER		4	4	4	
6	0455001	SCREW CAP HEX 1/2-13x2 G8 ZP		3	3	3	
7	23530336	SUPPORT		1	1	1	
8	23528406	SCREW CAP HEXF M12-1.75x80 G10.9		3	3	3	
9	23530231	PULLEY ASSY FORMER		1	1	1	
9	23534290	PULLEY ASSY CURRENT		1	1	1	
10	23528697	SCREW CAP HEXF M12-1.75x60 G10.9		1	1	1	
11	23519770	SCREW CAP HEXF M12-1.75x75 G10.9		2	2	2	
12	5249900304	SCREW CAP HEXF M12-1.75x75 G10.9		4	4	4	
13	23528696	SCREW CAP HEX M12-1.50x100		1	1	1	
14	11503669	SCREW CAP HEX M10-1.50x80 G10.9		1	1	1	
15	012329	AUTOMATIC TENSIONER ASSY		1	1	1	
16	11504822	SCREW CAP HEXF M9-1.25x30 G10.9		5	5	5	
17	23530576	COVER		1	1	1	
20	5060056	MULTI V-BELT / 10 RIB 78 3/4" (2000) 23530282		1	1	1	
21	562457	NUT, DRIVE END		1	1	1	
22	510926	PULLEY ALTERNATOR 10 RIB		1	1	1	
23	8924998	ELBOW 1/4 NPT X 3/8 TUBE		1	1	1	
24	HAHU0185	HOSE		1	1	1	
25	23528937	CLIP		1	1	1	
26	500985	WASHER FL .343x.875x.125 Z050		1	1	1	
27	500480	WASHER LO SPT .443x.779x.109 Z050		1	1	1	
28	500305	SCREW CAP HEX 3/8-16x7/8 G5 Z050		1	1	1	
29	8929833	CONNECTOR 1/4 NPT X 1/4 TUBE		1	1	1	
31	23523489	ELBOW 1/4 NPT X 3/8 TUBE		1	1	1	
32	FKHH0182	HOSE ASSY #5 X 20.50"		1	1	1	
34	23511744	SUPPORT		1	1	1	
35	11509528	SCREW CAP HEX M12-1.75x30 G10.9		4	4	4	
36	23530558	BRACE		1	1	1	
37	9402830	ELBOW 1" NPT X 1" TUBE		1	1	1	
38	BELM0194	HOSE ASSY /		1	1	1	
39	9402713	MALE CONNECTOR / JIC 37° FITTING / #16JIC-Mx1NPT-M STL		1	1	1	
50	065693	SUPPORT, DELCO ALT HARNESS		1	1	1	
51	500170	SCREW CAP HEX 1/4-20x2 G5 PT Z050		2	2	2	
52	504614	PLATE RETAINING / COLLAR		1	1	1	
53	504703	COLLAR 1/2" I.D. / TO FIX HOSE		1	1	1	
54	509815	TIE MOUNT / ATTACHMENT W/TREE MOUNT		2	2	2	

From 4-8165 To 8-9339		Date:07/2024	PAGE:Y2-0610-55

ALTERNATOR MOUNTING / "DELCO" WITH DETROIT S-60

Item#	Part	Description	XLII 45	XLII MTH40	XLII MTH45	XLII MTH45E	NOTES
60	Y2-0120-50	DRIVE PULLEY & BELTS - MTH					

From Y-7046 To 8-9339		Date:07/2024	PAGE:Y2-0610-60
VOLTAGE REGULATOR - 24 VOLTS W/270 AMPS			

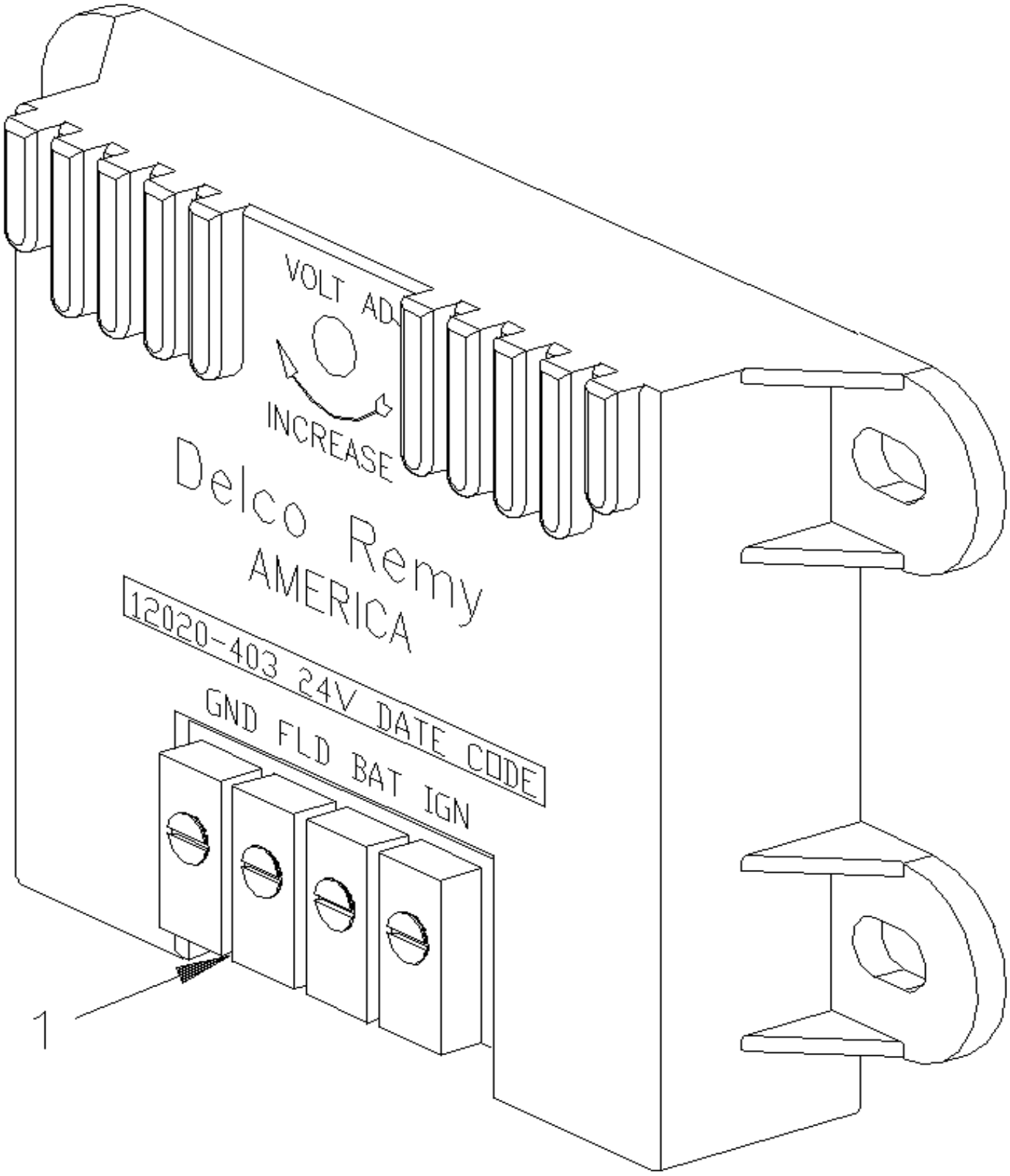

From Y-7046 To 8-9339		Date:07/2024	PAGE:Y2-0610-60

VOLTAGE REGULATOR - 24 VOLTS W/270 AMPS

Item#	Part	Description	XLII 45	XLII MTH40	XLII MTH45	XLII MTH45E	NOTES
1	562775	REGULATOR ASSY 24V / W/4 SCREWS To 3-8164		1	1	1	
1	563439	REGULATOR ASSY 24V / W/5 SCREWS From 4-8165		1	1		
1	564017	NOISE SUPPRESSOR CONDENSATOR / STAMPED		1	1		
. NS	MI06-04	. SEE MAINTENANCE INFORMATION		1	1		
1	562776	REGULATOR ASSY 12V		1	1	1	
1	064577	JUMPER, WIRE		1	1	1	

From Y-7046 To 6-8906		Date:07/2024	PAGE:Y2-0615-00
BATTERIES INSTALLATION - BUS			

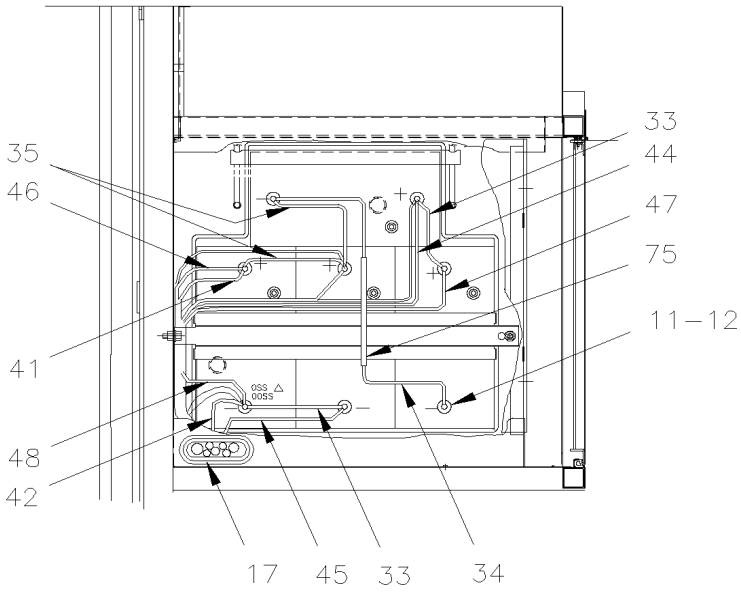

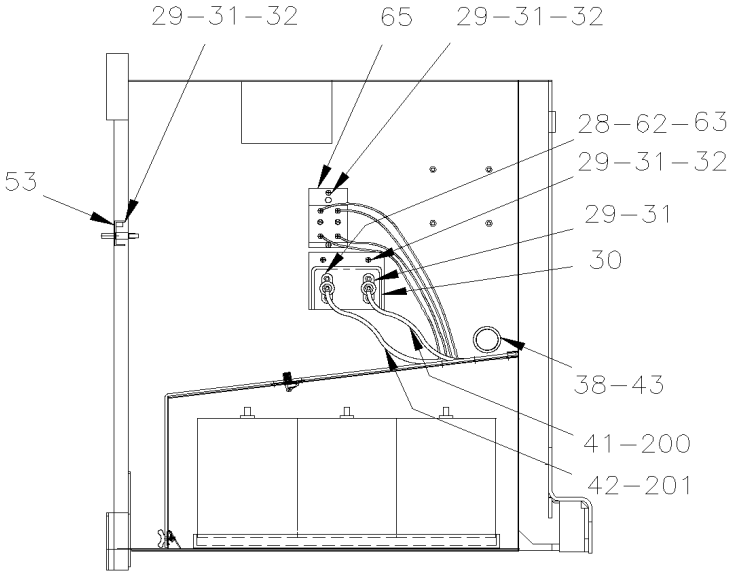

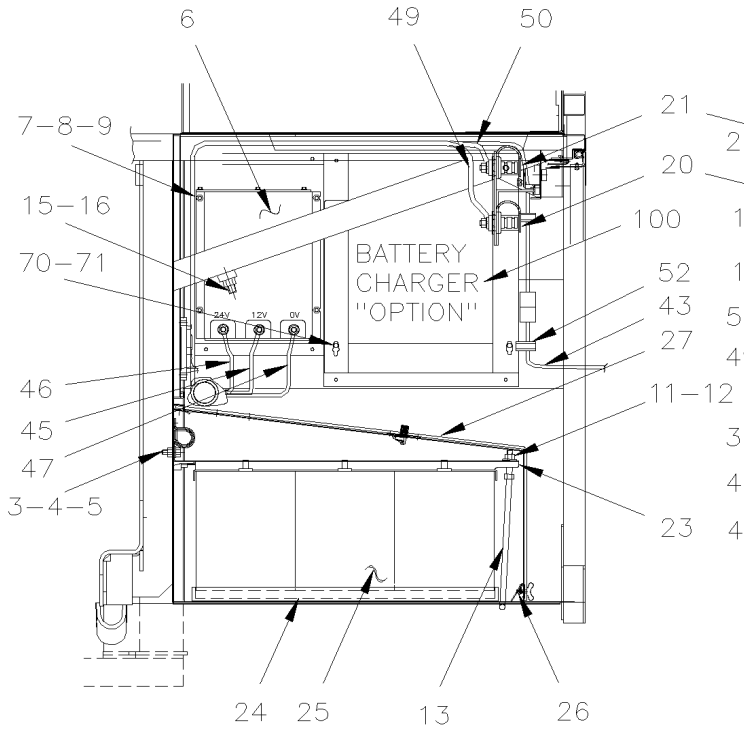

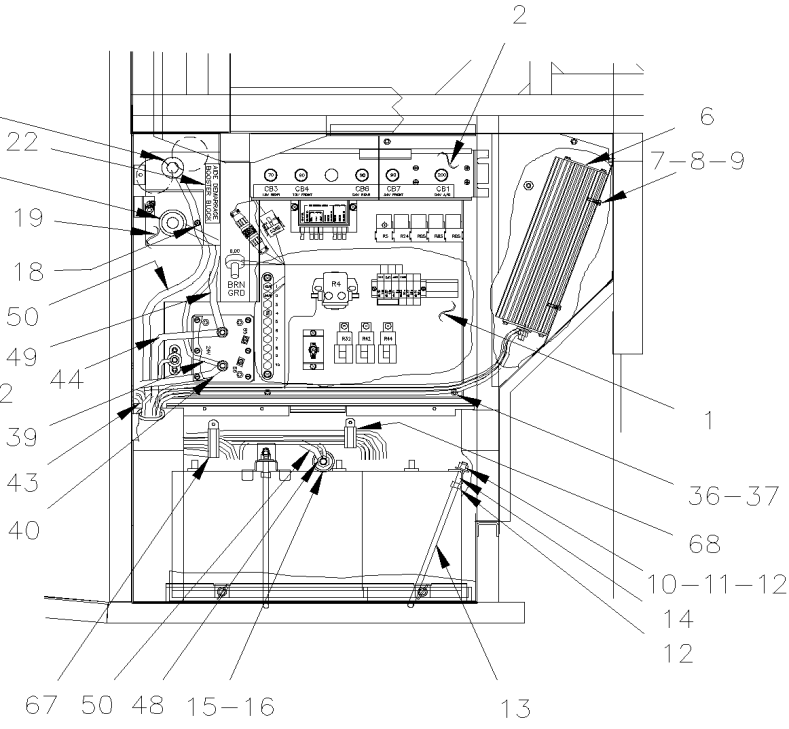

From Y-7046 To 6-8906		Date:07/2024	PAGE:Y2-0615-00
BATTERIES INSTALLATION - BUS			

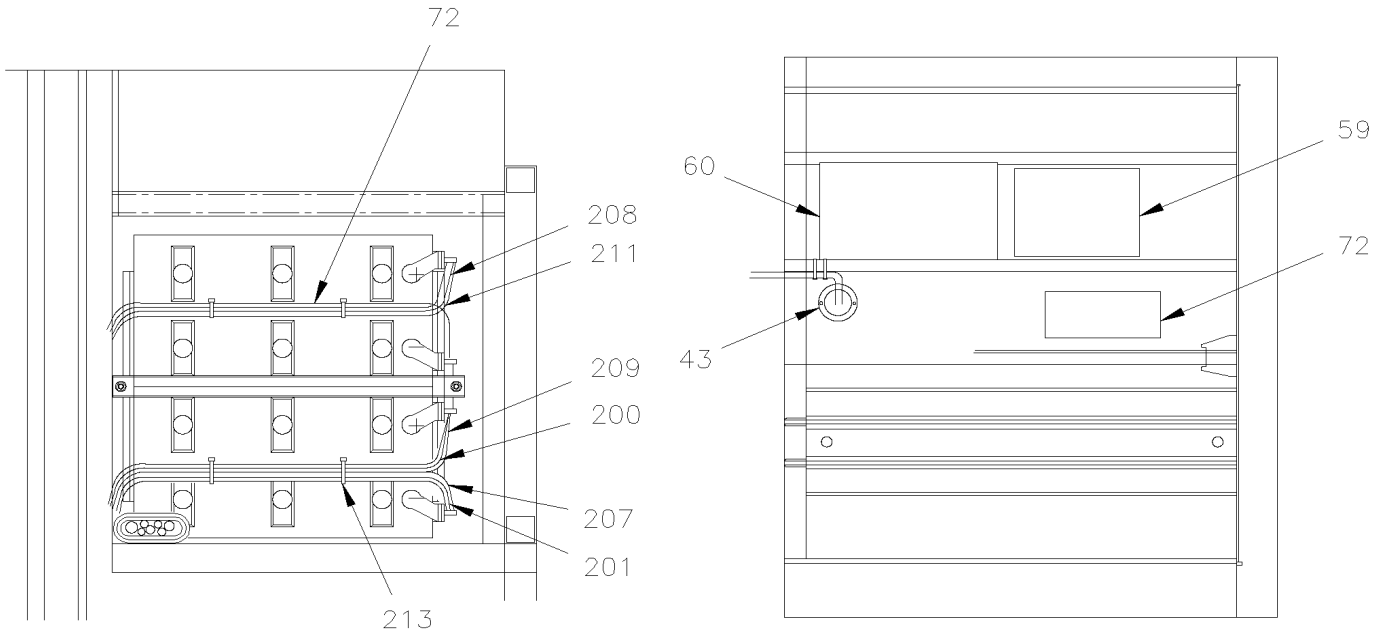

WITH 8D BATTERIES

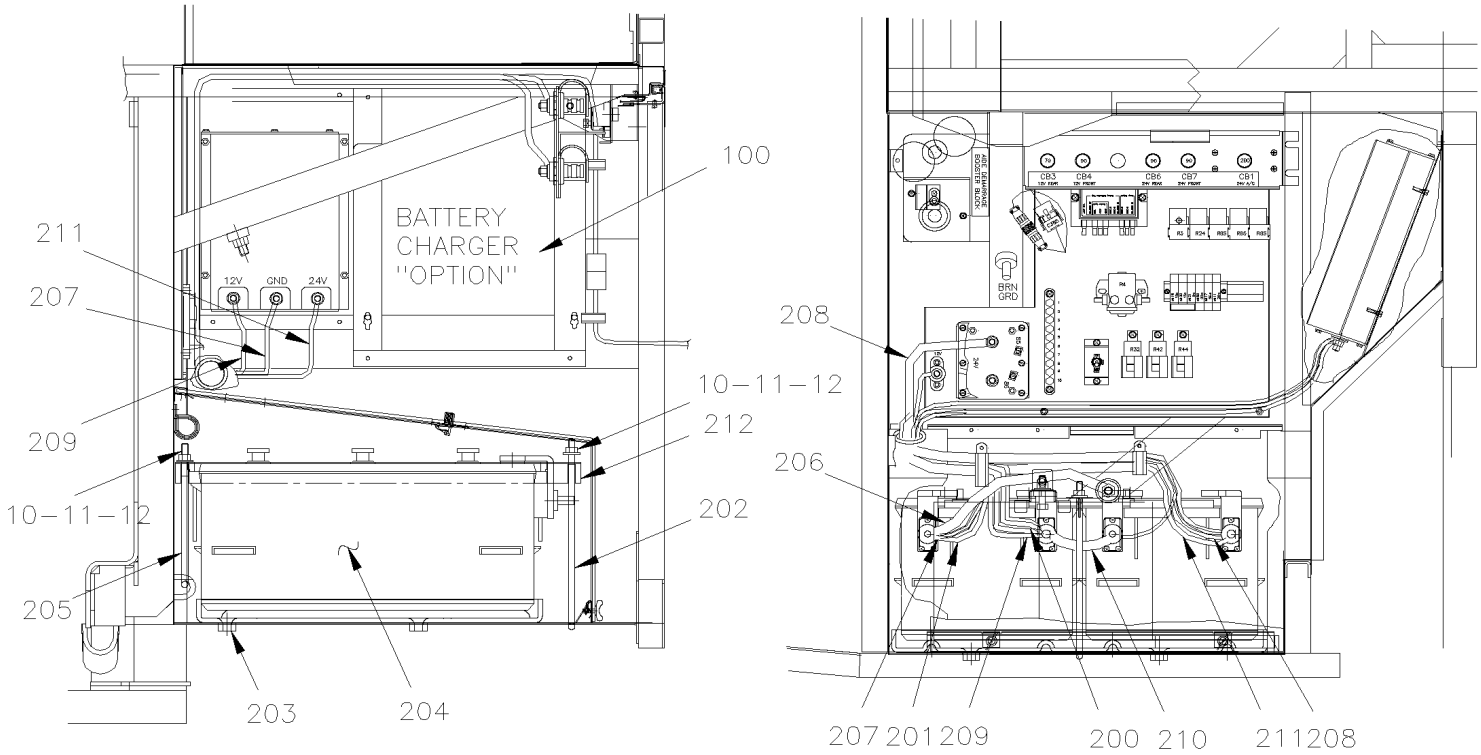

From Y-7046 To 6-8906		Date:07/2024	PAGE:Y2-0615-00
BATTERIES INSTALLATION - BUS			

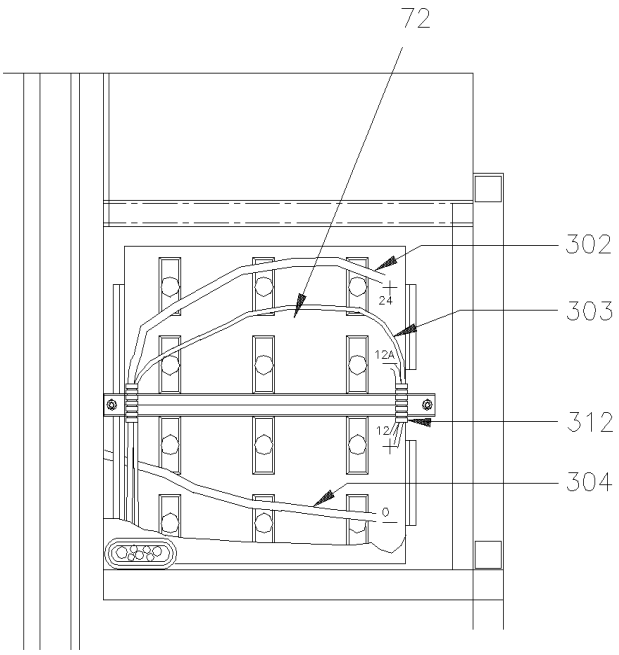

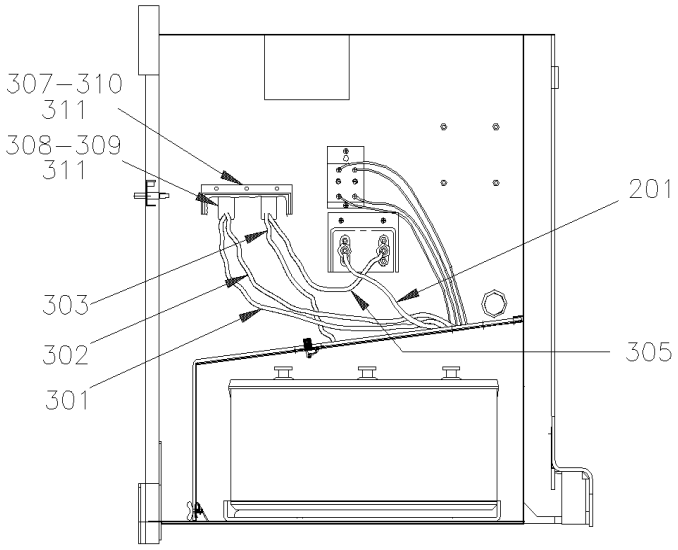

WITH 8D BATTERIES TOP POST

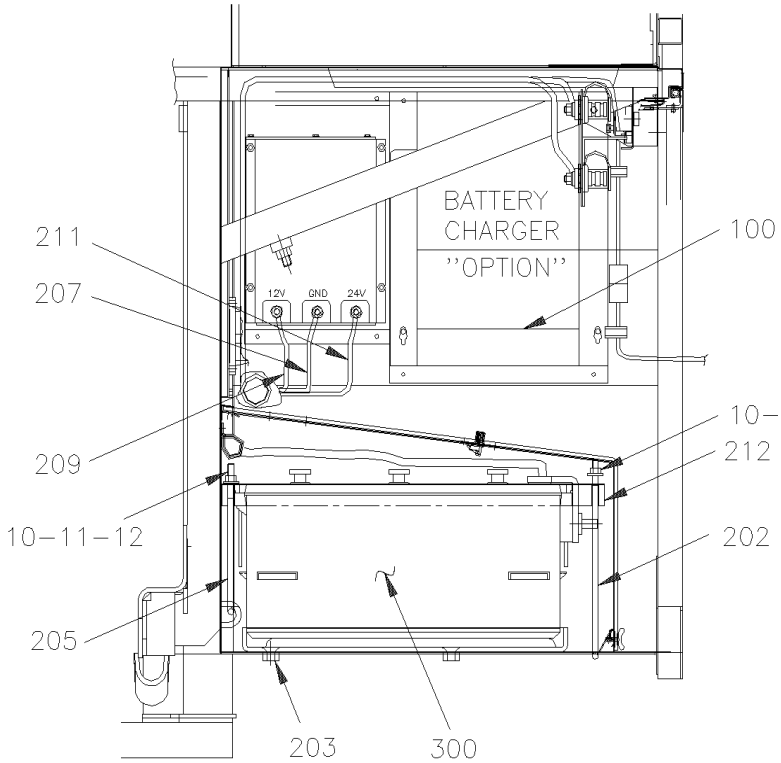

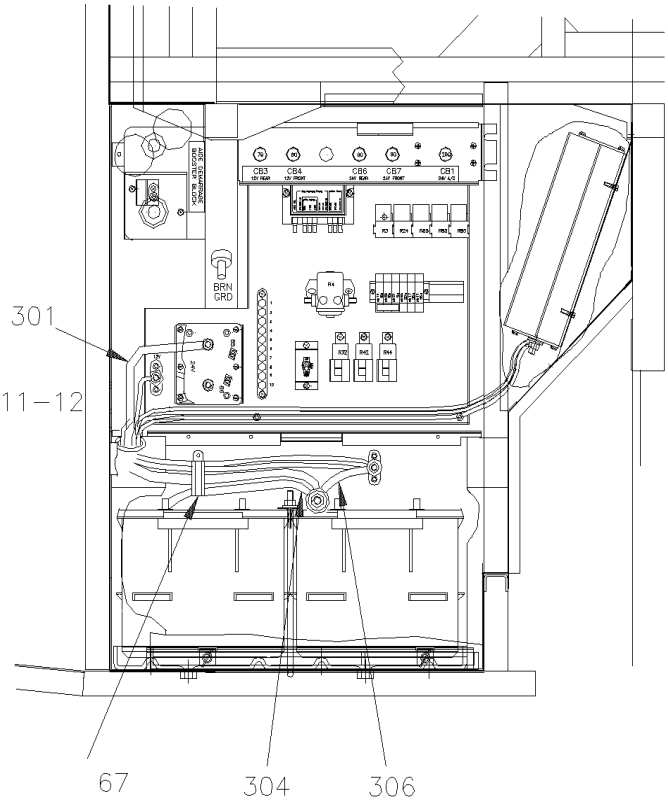

From Y-7046 To 6-8906		Date:07/2024	PAGE:Y2-0615-00

BATTERIES INSTALLATION - BUS

Item#	Part	Description	XLII 45	XLII MTH40	XLII MTH45	XLII MTH45E	NOTES
1	**Y2-0615-10**	**BATTERIES COMPARTMENT PANEL**					
2	**Y2-0616-10**	**BREAKER PANEL - BUS**					
3	502790	SCREW CAP HEX M8-1.25x20 G8.8 Z050	1				
4	500874	WASHER FL 8.4x17.0x1.6 Z050	1				
5	5001003	WASHER LO SPT 8.1x12.7x2.0 Z050	1				
6	562970	EQUALIZER "VANNER" 100AMPS To 1-7407	1				
6	563130	EQUALIZER "VANNER" 100AMPS From 1-7408 To 3-8109	1				
6	563334	EQUALIZER "VANNER" 100AMPS From 3-8110	1				
7	500786	NUT HEX #10-24 Z050	4				
8	500964	WASHER FL .203x.500x.047 Z050	4				
9	500470	WASHER LO SPT .193x.334x.047 Z050	4				
10	500445	WASHER FL .437x1.000x.083 Z050	2				
11	500257	WASHER LO SPT 10.2x18.1x2.2 Z050	11				
12	500102	NUT HEX 3/8-16 SS	14				
13	381660	BATTERY SUP. HOOK 38-16x280MM SS	3				
14	381602	RACK BATTERIES	1				
15	500998	NUT HEX 1/2-13 BR	2				
16	500482	WASHER LO SPT .506x.873x.125 Z050	2				
17	504606	GROMMET / 3.000x3.500x.062x.500x4.000	1				
18	504118	RIVET POP DOME OE 3/16x3/8 AL	2				
19	381210	SEPARATOR / FIBERGLASS RED	1				
20	561856	BOOSTER BLOCK, REMOTE / RED	1				
21	561857	BOOSTER BLOCK, REMOTE / BLACK	1				
22	062682	DECAL / "BOOSTER BLOCK" / ENGLISH & FRANCAIS	1				
22	066045	DECAL / "BOOSTER BLOCK" / ENGLISH & SPANISH	1				
23	381600	BATTERIES SUPPORT	1				
24	380671	TRAY, BATTERIES	1				
25	563030	BATTERY 12V/930 CCA / GR31	4				
26	214400	NUT SPR U 1/4-20 .064-.125 YC	2				
. NS	500837	. NUT SPR U 1/4-20 .064-.125	1				
27	381970	COVER BATTERIES ASSY / W/2 LATCH To 1-7590	1				
. NS	381671	. COVER PANEL To 1-7590	1				
. NS	504203	. SPRING LATCH / KNURLED STEEL KNOB To 1-7590	2				
. NS	5001302	. SCREW TH SHR 1/4-20x3/4 SS To 1-7590	2				
. NS	504699	. RING RETAINER / EXT .250 x .207 x .025" / SS To 1-7590	2				
. NS	500411	. WASHER FL .260x.697x.050 SS To 1-7590	2				
. NS	504339	. RIVET POP DOME OE 1/8x3/8 SS To 1-7590	4				
. NS	160295	. DECAL / "IT FORBIDDEN TO STOCK ANYTING IN TH. / ENGLISH & FRANCAIS To 1-7590	1				
27	381983	COVER BATTERIES ASSY / W/2 LATCH From 1-7591	1				
27	504203	. SPRING LATCH / KNURLED STEEL KNOB From 1-7591	2				
27	504717	. RIVET POP DOME OE 1/8x1/4 SS From 1-7591	4				
27	381982	. COVER PANEL From 1-7591	1				

From Y-7046 To 6-8906		Date:07/2024	PAGE:Y2-0615-00

BATTERIES INSTALLATION - BUS

Item#	Part	Description	XLII 45	XLII MTH40	XLII MTH45	XLII MTH45E	NOTES
27	506738	. TAPE RUB ADH1 CC POL 1/8" x 1" x 50' / GREY 2520 From 1-7591	AR				
27	160295	. DECAL / "IT FORBIDDEN TO STOCK ANYTING IN TH. / ENGLISH & FRANCAIS From 1-7591	1				
27	161191	DECAL / "IT FORBIDDEN TO STOCK ANYTING IN TH. / ENGLISH & SPANISH	1				
28	560422	BLOCK, TERMINAL / 1 STUD 3/8-16 / BLACK	2				
29	502698	SCREW MA PAN PH M4-0.7x16 SS BK	8				
30	381223	COVER PROTECTOR	1				
31	502636	WASHER LO SPT 4.1x7.6x0.9 Z050	8				
32	500438	WASHER FL .187x.437x.050 Z050	4				
33	061180	CABLE ASSY / B - TO B -	2				
34	061036	CABLE ASSY / B - TO B -	1				
35	062371	CABLE ASSY / B + TO B +	2				
36	502565	NUT HEX M6-1.0 SS	4				
37	502564	WASHER LO SPT 6.1x11.8x1.6 Z050	4				
38	504059	GROMMET / 1.250x1.500x.094x.375x1.875	1				
39	064042	CABLE ASSY #24E	1				
40	063999	CABLE ASSY #101 To 3-8128	1				
40	065914	CABLE ASSY #101 From 3-8129	1				
41	063911	CABLE ASSY / #12	1				
42	064044	CABLE ASSY / #00A	1				
NS	680532	SEALANT SIKA #221 / GREY / 310ml CARTRIDGE	1				
43	562967	BATTERY CHARGER 24V	1				
44	Call order desk	CABLE ASSY / RELAY BATTERY & BATTERY #24	1				P
45	063588	CABLE ASSY / #0VA To 3-8146	1				
45	065819	CABLE ASSY / #0VA From 3-8147	1				
46	063636	CABLE ASSY / #12VA To 3-8146	1				
46	065825	WIRING HARNESS From 3-8147	1				
47	064046	CABLE ASSY / #24VA To 3-8146	1				
47	065826	CABLE ASSY #24VA From 3-8147	1				
48	063592	CABLE ASSY / B - TO GROUND	1				
49	063595	CABLE ASSY / TO BOOSTER BLOCK #24	1				
50	064047	CABLE ASSY / BATTERY BOOSTER BLOCK / #0	1				
52	952631	CLAMP / 3/4" I.D.	2				
53	**Y2-0665-10**	**SWITCHES, LIGHTS, AJAR - UNDER FLOOR**					
NS	064052	CABLE BATTERIES COMPARTMENT LIGHT	1				
59	065308	DECAL BATTERIE DELCO	1				
59	065309	DECAL BATTERIES 8D	1				
60	065374	DECAL BATTERIES COMPARTMENT	1				
60	065185	DECAL BATTERIES COMPARTMENT	1				
62	500379	NUT HEX 3/8-16 BR	2				
63	500478	WASHER LO SPT .380x.683x.094 Z050	2				
65	381758	BASE, BREAKER	1				
65	870690	BREAKER 30AMPS / 24V /	2				

From Y-7046 To 6-8906		Date:07/2024	PAGE:Y2-0615-00

BATTERIES INSTALLATION - BUS

Item#	Part	Description	XLII 45	XLII MTH40	XLII MTH45	XLII MTH45E	NOTES
67	504458	CLAMP / 1 5/8" I.D.	1				
68	952635	CLAMP / 1" I.D.	1				
70	502565	NUT HEX M6-1.0 SS	4				
71	502570	WASHER LO SPT 6.1x11.8x1.6 SS	4				
72	061325	DECAL "CAUTION" ALWAYS FIRST.... / ENGLISH & FRANCAIS	1				
72	061325	DECAL "CAUTION" ALWAYS FIRST.... / ENGLISH & FRANCAIS	1				
75	562053	CONVOLUTED TUBING / UNSLIT / BLACK / 1.000"	AR				
100	**Y2-0670-10**	**BATTERIES CHARGER - INSTALLATION**					
200	063909	CABLE ASSY / #12	1				
201	063908	CABLE ASSY / #00A	1				
202	381660	BATTERY SUP. HOOK 38-16x280MM SS	1				
203	381670	TRAY, BATTERIES 8D	1				
204	562434	BATTERY 12V/8D / W/SIDE POSTS / WET	2				
NS	563065	BATTERY KIT, SIDE POSTS / FOR 8D BATTERIES	AR				
205	381513	J-HOOK / 209.55MM / 3/8-16 SS	1				
206	064255	CABLE ASSY / B - TO GROUND	1				
207	063897	CABLE ASSY / #0VA To 3-8146	1				
207	065821	CABLE ASSY / #0VA From 3-8147	1				
208	064256	CABLE ASSY / RELAY BATTERY & BATTERY #24	1				
209	063898	CABLE ASSY / #12VA To 3-8146	1				
209	065822	CABLE ASSY / #12VA From 3-8147	1				
210	063903	CABLE ASSY / B + TO B -	1				
211	064257	CABLE ASSY #24VA To 3-8146	1				
211	065824	CABLE ASSY #24VA From 3-8147	1				
212	381669	RACK BATTERIES	1				
213	504637	CABLE TIE / 3/16" x 13"	4				
300	562665	BATTERY 12V/8D / W/TOP POSTS / WET To 1-7503	2				
300	562628	BATTERY 12V/8D / W/TOP POSTS / GEL	2				
300	563031	BATTERY 12V/8D / W/TOP POSTS	1				
301	065234	CABLE ASSY #24	1				
302	064376	CABLE ASSY / #24V	1				
303	064380	CABLE ASSY / #12V	1				
304	065184	CABLE ASSY #0	1				
305	065434	CABLE 12VOLT ASSY	1				
306	065435	CABLE ASSY #0	1				
307	381780	PROTECTOR BOUNDS	1				
308	500658	SCREW TC PAN PH #10-24x3/4 Z050	10				
309	560177	BLOCK, TERMINAL / 1 STUD 1/2-13 / BLACK	2				
310	500964	WASHER FL .203x.500x.047 Z050	3				
311	500470	WASHER LO SPT .193x.334x.047 Z050	15				
312	561683	CONVOLUTED TUBING / SLIT / BLACK & GRAY / .500"	AR				
NS	065462	CABLE ASSY / 110V BATTERIES WARMER INSTALL	1				A

From Y-7046 To 6-8906		Date:07/2024	PAGE:Y2-0615-00

BATTERIES INSTALLATION - BUS

Item#	Part	Description	XLII 45	XLII MTH40	XLII MTH45	XLII MTH45E	NOTES
NS	562501	BATTERY WARMER 160 WATTS	2				A
NS	065445	DECAL / BATTERY HEATING & WARMER 164MM x 30MM	1				A
		A) USE WITH BATTERY WARMER 110V.					
		P) CALL ORDER DESK FOR SPECIFIC APPLICATION (V.I.N.)					

From Y-7046 To 6-8906		Date:07/2024	PAGE:Y2-0615-10
BATTERIES COMPARTMENT PANEL			

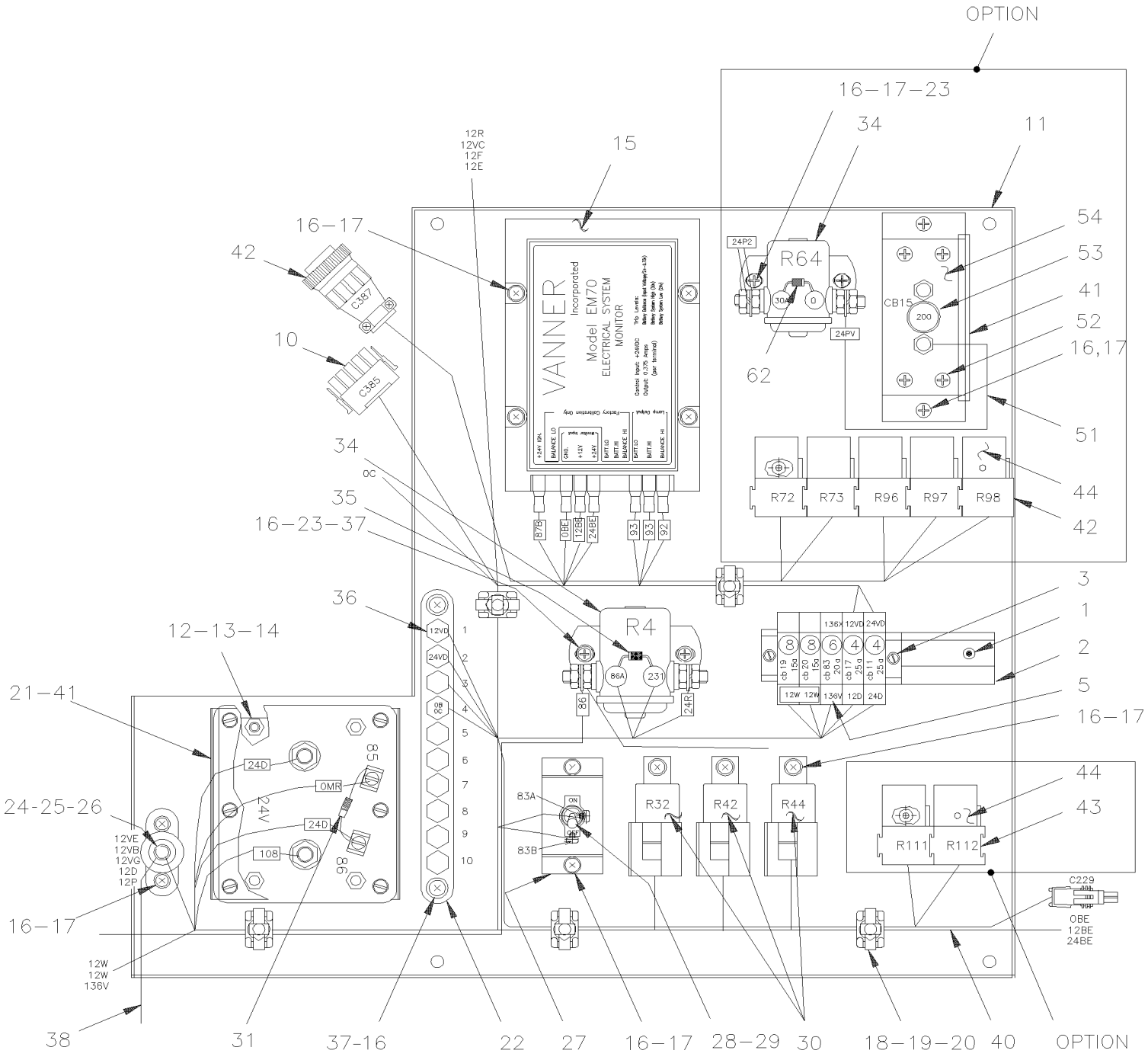

From Y-7046 To 6-8906		Date:07/2024	PAGE:Y2-0615-10

BATTERIES COMPARTMENT PANEL

Item#	Part	Description	XLII 45	XLII MTH40	XLII MTH45	XLII MTH45E	NOTES
1	504006	RIVET POP CK OE 1/8x5/16 AL	2				
2	380905	RAIL SUPPORT / 150MM	1				
3	561729	STOPPER	2				
4	561795	BREAKER 25AMPS / 24V /	2				
5	381813	BUS BAR / W/2 HOLES 25MM	1				
6	381814	BUS BAR / W/3 HOLES 38MM	1				
7	561790	BREAKER 6AMPS / 24V /	1				
8	561793	BREAKER 15AMPS / 24V /	2				
10	065116	WIRING HARNESS, BATTERIES COMPARTMENT ACCES To Y-7310	1				
10	065345	WIRING HARNESS, BATTERIES COMPARTMENT ACCES From Y-7311 To 1-7479	1				
10	065420	WIRING HARNESS, BATTERIES COMPARTMENT ACCES From 1-7480	1				
11	381834	BATTERIES COMPARTMENT BOARD To Y-7310	1				
11	381966	BATTERIES COMPARTMENT BOARD From Y-7311 To Y-7376	1				
11	381976	BATTERIES COMPARTMENT BOARD From Y-7311 To Y-7376	1				
12	502565	NUT HEX M6-1.0 SS	8				
13	502573	WASHER FL 6.4x12.5x1.6 SS	8				
14	502570	WASHER LO SPT 6.1x11.8x1.6 SS	8				
15	563032	MONITOR / BATTERY EQUALIZER	1				
16	500654	SCREW TC BDG PH #8-32x1/2 Z050	18				
17	500022	WASHER LO INT .168x.340x.023 Z050	18				
18	504013	TIE MOUNT / 1/4" X 1/4" I.D.	5				
19	504637	CABLE TIE / 3/16" x 13"	5				
20	504114	RIVET POP DOME OE 3/16x1/4 AL	5				
21	562364	RELAY 24V S.P.S.T. / 300 AMPS N.O. / / BATTERY DISCONNECT	1				
22	562173	JUNCTION BLOCK W/10 STUDS	1				
23	500438	WASHER FL .187x.437x.050 Z050	4				
24	560422	BLOCK, TERMINAL / 1 STUD 3/8-16 / BLACK	1				
25	500478	WASHER LO SPT .380x.683x.094 Z050	1				
26	500379	NUT HEX 3/8-16 BR	1				
27	381594	SUPPORT, SWITCH	1				
28	562394	PLATE, INDICATING (ON/OFF)	1				
29	560256	SWITCH / OFF-ON / S.P.S.T.	1				
30	561991	RELAY 24V S.P.S.T. / 70 AMPS N.O.	3				
31	561740	DIODE / 3AMPS	1				
34	561005	SWITCH MAGNETIC / 24V S.P.S.T. / 200AMPS N.O.	1				
35	060798	DIODE ASSY	1				
36	500765	NUT HEX #10-32 BR	6				
37	500438	WASHER FL .187x.437x.050 Z050	4				
38	064045	CABLE ASSY #12P	1				
38	064258	CABLE ASSY / W/8D BATTERIES #12	1				
NS	064577	JUMPER, WIRE	1				
40	064048	WIRE NO:86 ASSY	1				

From Y-7046 To 6-8906		Date:07/2024	PAGE:Y2-0615-10

BATTERIES COMPARTMENT PANEL

Item#	Part	Description	XLII 45	XLII MTH40	XLII MTH45	XLII MTH45E	NOTES
41	506338	RUBBER CHANNEL / 1/16" x 1/4" INT "U" SHAPE / ROUND C.T.L.	AR				
NS	680066	ADHESIVE / ADBOND #5014 / 23.6ML BOTTLE	AR				
42	065336	WIRING HARNESS, W.C.L. From Y-7311 To 5-8605	1				
42	066467	WIRING HARNESS, W.C.L. From 5-8606	1				
43	561707	RELAY 24V S.P.D.T. W/RESISTOR / From Y-7377 To 5-8577	5				
43	563332	RELAY 24V S.P.D.T. W/RESISTOR / "VOLVO" (20374662) From 5-8578	5				
44	065368	WIRING HARNESS, WATER HEATER	1				
51	065737	CABLE ASSY / BREAKER TO SWITCH	1				I
52	500510	SCREW MA BDG PH #10-32x3/4 SS EMN	4				I
53	560838	BREAKER 200AMPS / 24V /	1				I
54	382025	SUPPORT, BREAKER	1				I
55	060798	DIODE ASSY	1				
NS	060793	DECAL	1				I
NS	063595	CABLE ASSY / TO BOOSTER BLOCK #24	1				I
NS	560815	RING TERMINAL #10 / 22-18 / INSULATED / AMP 42037-2	1				I
NS	562590	WIRE CABLE 18 / RED / TXL	AR				I
NS	562587	WIRE CABLE 18 / BLACK / TXL	AR				I
62	065738	CABLE ASSY / SWITCH TO INVERTER / # 24P2	1				I
NS	065739	CABLE ASSY / BATTERIES TO INVERTER / 0A	1				I
NS	**Y2-2345-41**	**POWERVERTER - 24/110 VOLTS - 5000 WATTS**					
		I) USE WITH INVERTER #562567 SEE PAGE Y2-2345-41					

From Y-7046 To 7-9095		Date:07/2024	PAGE:Y2-0615-50
BATTERIES INSTALLATION - MTH40' & MTH-45' ENT			

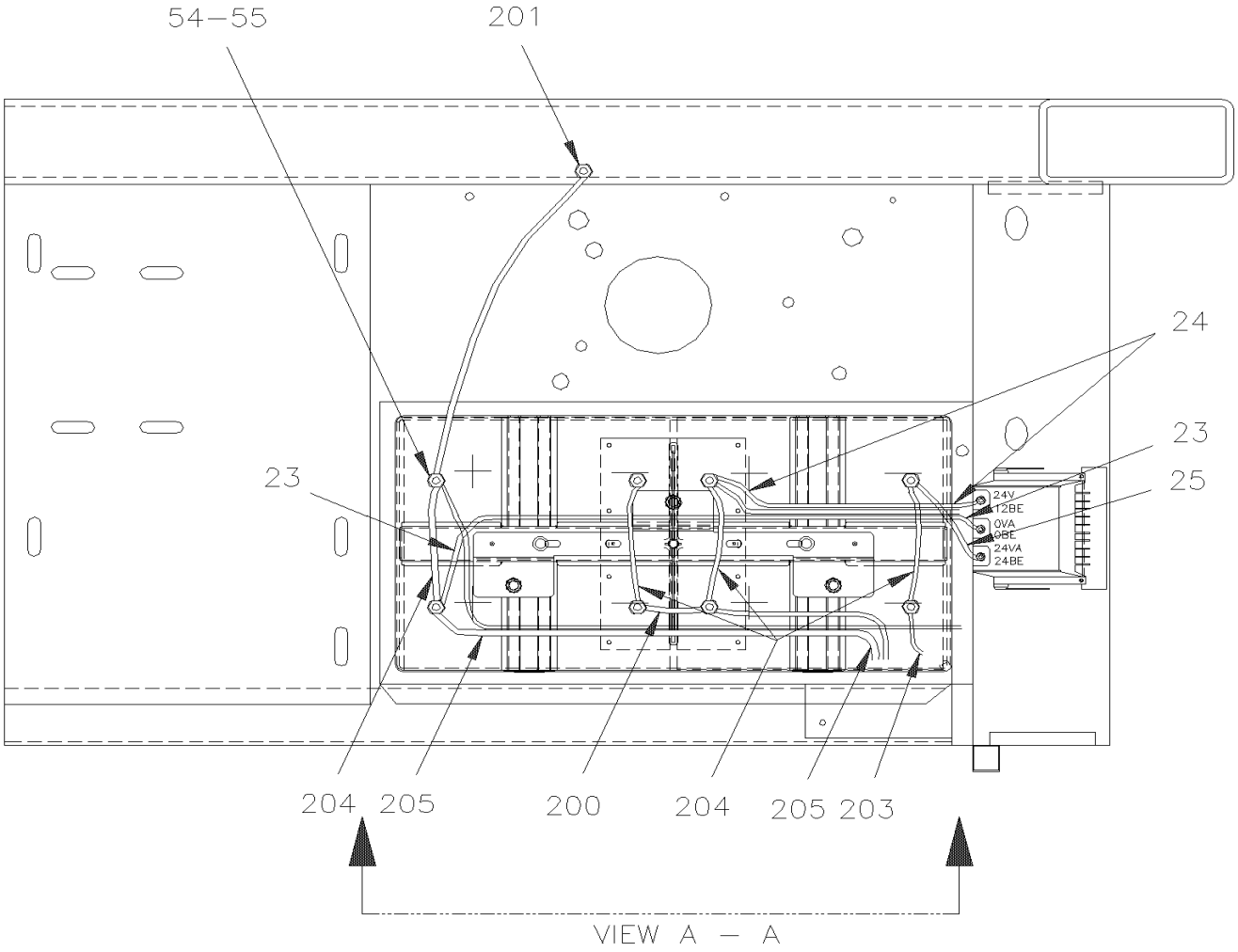

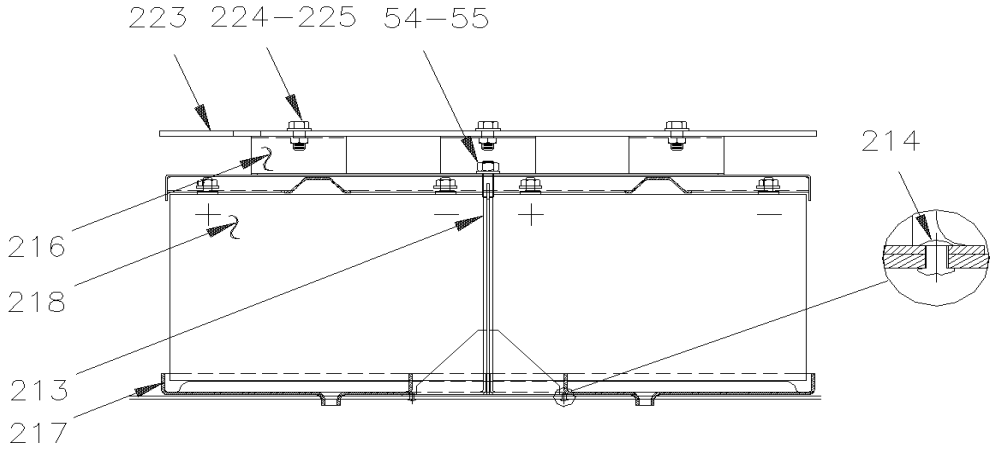

From Y-7046 To 7-9095		Date:07/2024	PAGE:Y2-0615-50
BATTERIES INSTALLATION - MTH40' & MTH-45' ENT			

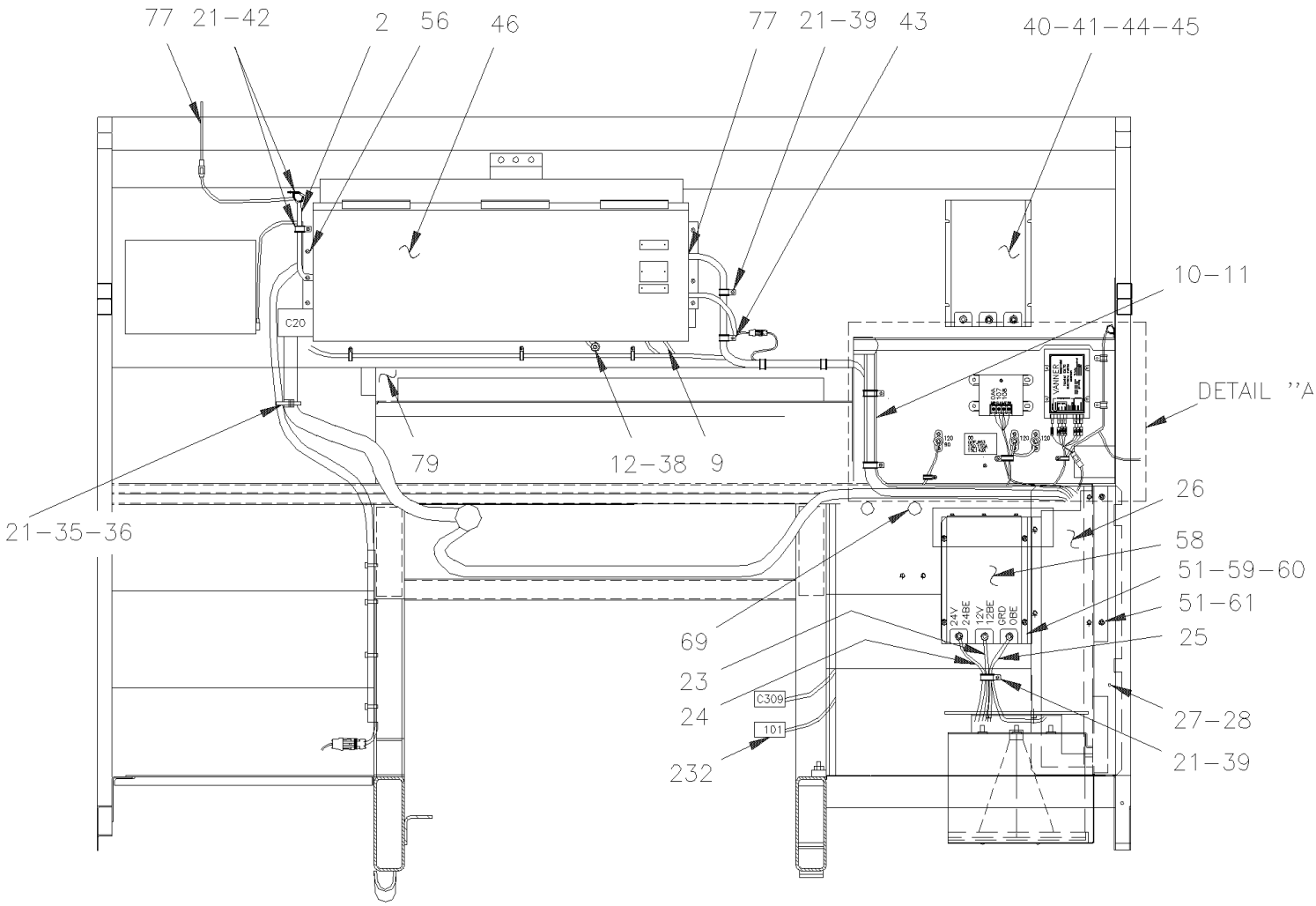

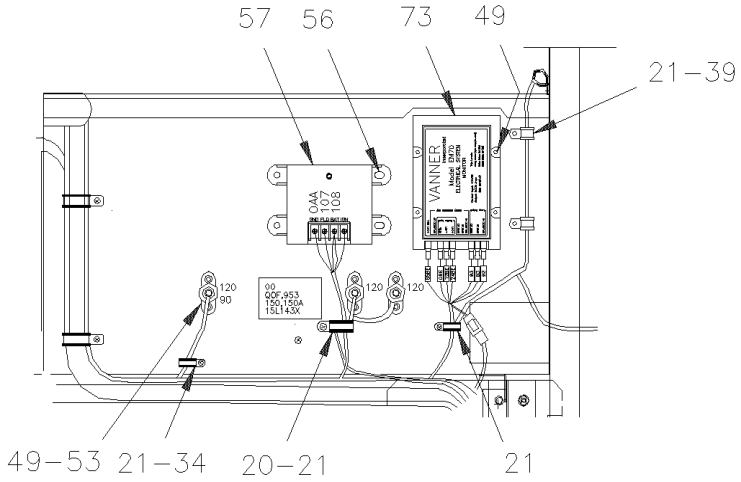

DETAIL ''A''

From Y-7046 To 7-9095		Date:07/2024	PAGE:Y2-0615-50

BATTERIES INSTALLATION - MTH40' & MTH-45' ENT

Item#	Part	Description	XLII 45	XLII MTH40	XLII MTH45	XLII MTH45E	NOTES
2	064793	WIRING HARNESS ENGINE COMPARTMENT To 2-7229		1		1	
2	065285	WIRING HARNESS ENGINE COMPARTMENT From 2-7230 To 2-7843		1		1	
2	065667	WIRING HARNESS ENGINE COMPARTMENT From 2-7844 To 3-8164		1		1	
2	065766	WIRING HARNESS ENGINE COMPARTMENT From 4-8165 To 5-8358		1		1	
2	065970	WIRING HARNESS ENGINE COMPARTMENT From 5-8359 To 5-8644		1		1	
2	066350	WIRING HARNESS ENGINE COMPARTMENT From 5-8645		1		1	
9	561916	NUT, SPEED		2		2	
10	064925	CABLE ASSY #12VR		1		1	
11	063416	CABLE ASSY #24VR		1		1	
12	062849	CABLE ASSY # 0-8		1		1	
20	952625	CLAMP / 3/8" I.D.		4		4	
21	500879	SCREW TP PAN PH #10x1 Z050		45		45	
23	065197	CABLE ASSY #0VA		1		1	
24	065198	CABLE ASSY #12VA		1		1	
25	063666	CABLE ASSY / #24VA		1		1	
26	381944	BREAKER PROTECTOR		1		1	
27	502500	SCREW TC BDG PH #8-32x1/2 CJ		5		5	
28	500593	WASHER FL .200x.437x.036 BR		5		5	
34	952629	CLAMP / 5/8" I.D.		1		1	
35	980464	TIE CABLE BK 385 X 7.6		13		13	
36	504013	TIE MOUNT / 1/4" X 1/4" I.D.		9		9	
38	500968	NUT HEX STO 1/2-13 Z050		2		2	
39	952631	CLAMP / 3/4" I.D.		16		16	
40	562969	EQUALIZER "VANNER" 60AMPS To 1-7407		1		1	
40	563129	EQUALIZER "VANNER" 60AMPS From 1-7408		1		1	
41	500642	SCREW TP PAN PH #10x3/4 Z050		4		4	
42	560484	CLAMP / 1" I.D.		3		3	
43	504637	CABLE TIE / 3/16" x 13"		20		20	
44	500470	WASHER LO SPT .193x.334x.047 Z050		4		4	
45	500964	WASHER FL .203x.500x.047 Z050		4		4	
46	**Y2-0620-00**	**REAR JUNCTION BOX ASSY**					
49	500641	SCREW TP PAN PH #8x3/4 Z050		26		26	
51	500473	WASHER LO SPT .262x.489x.062 Z050		6		6	
53	560422	BLOCK, TERMINAL / 1 STUD 3/8-16 / BLACK		3		3	
54	502616	WASHER LO SPT 10.2x18.1x2.2 SS		8		8	
55	500102	NUT HEX 3/8-16 SS		8		8	
56	500642	SCREW TP PAN PH #10x3/4 Z050		6		6	
57	562775	REGULATOR ASSY 24V / W/4 SCREWS To 3-8164		1		1	
57	563439	REGULATOR ASSY 24V / W/5 SCREWS From 4-8165		1		1	
57	564017	NOISE SUPPRESSOR CONDENSATOR / STAMPED		1		1	
. NS	MI06-04	. SEE MAINTENANCE INFORMATION		1		1	
58	562970	EQUALIZER "VANNER" 100AMPS To 1-7407		1		1	

From Y-7046 To 7-9095		Date:07/2024	PAGE:Y2-0615-50

BATTERIES INSTALLATION - MTH40' & MTH-45' ENT

Item#	Part	Description	XLII 45	XLII MTH40	XLII MTH45	XLII MTH45E	NOTES
58	563130	EQUALIZER "VANNER" 100AMPS From 1-7408 To 3-8109		1		1	
58	563334	EQUALIZER "VANNER" 100AMPS From 3-8110		1		1	
59	500769	NUT HEX 1/4-20 Z050		4		4	
60	500441	WASHER FL .312x.734x.065 Z050		4		4	
61	500536	SCREW TP HEXW SLT #14x1 ZP		2		2	
69	562333	TIE MOUNT BAR / 5/8" X 8" (5 TIE HOLDER)		2		2	
73	563032	MONITOR / BATTERY EQUALIZER		1		1	
77	680025	CAULKING STRIP 3/16" O.D. X 14'		1		1	
79	065290	HEAT DETECTOR "THERMO-DISK"		2		2	
200	062371	CABLE ASSY / B + TO B +		1		1	
201	061329	CABLE ASSY / B - TO GROUND		1		1	
203	064929	CABLE ASSY #24		1		1	
204	061180	CABLE ASSY / B - TO B -		4		4	
205	063406	CABLE ASSY / B - TO BOOSTER BLOCK		1		1	
213	381558	SEPARATOR ASSY		1		1	
214	504379	RIVET POP DOME OE 3/16x1/4 SS		7		7	
216	381553	SUPPORT BATTERIES		1		1	
217	381560	TRAY, BATTERIES		1		1	
218	563030	BATTERY 12V/930 CCA / GR31		4		4	
223	381945	BATTERIES PROTECTOR		1		1	
224	502655	SCREW CAP HEX M10-1.5x25 SS BK		3		3	
225	500270	WASHER FL .406x1.000x.063 SS		3		3	
232	063894	CABLE ASSY #101 To 3-8120		1		1	
232	065913	CABLE ASSY #101 From 3-8121		1		1	

From 7-9096 To 8-9339		Date:07/2024	PAGE:Y2-0615-51
BATTERIES INSTALLATION - MTH WITH / MUX			

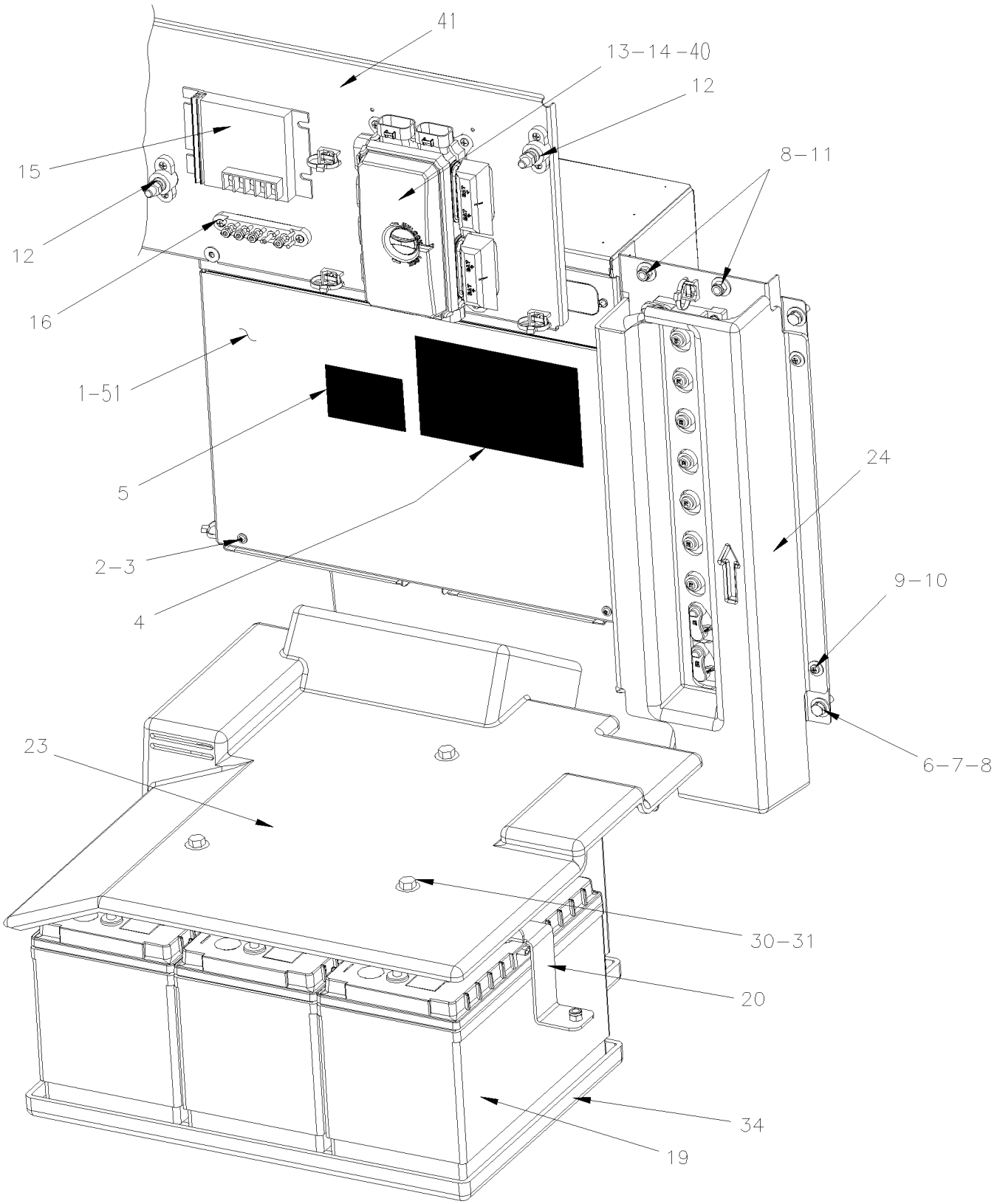

From 7-9096 To 8-9339		Date:07/2024	PAGE:Y2-0615-51
BATTERIES INSTALLATION - MTH WITH / MUX			

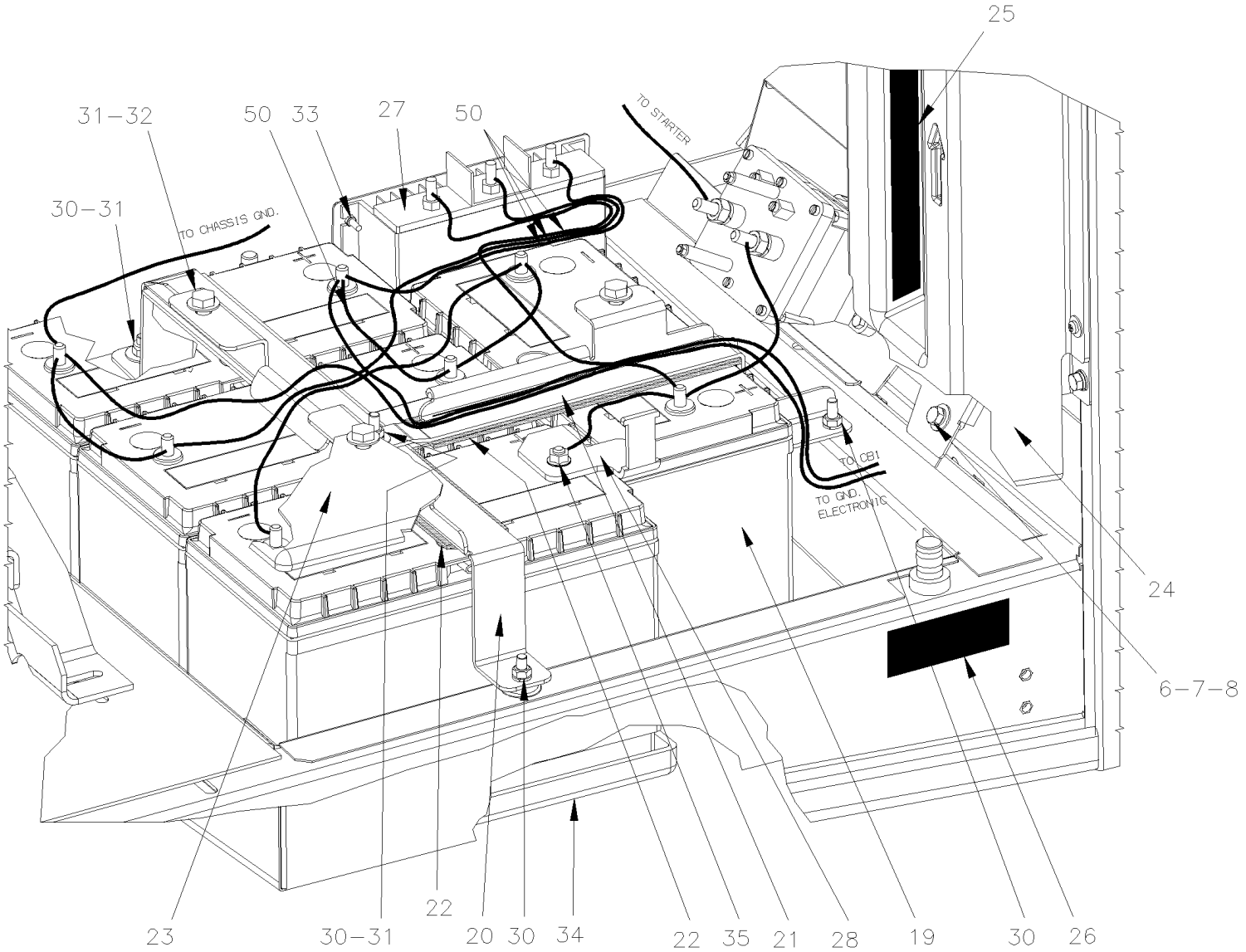

From 7-9096 To 8-9339		Date:07/2024	PAGE:Y2-0615-51

BATTERIES INSTALLATION - MTH WITH / MUX

Item#	Part	Description	XLII 45	XLII MTH40	XLII MTH45	XLII MTH45E	NOTES
1	382226	COVER REAR JCT BOX			1	1	
2	502698	SCREW MA PAN PH M4-0.7x16 SS BK			3	3	
3	504357	WASHER FL .187x.437x.050 SS			3	3	
4	066913	DECAL / REAR JCT BOX COMPONENTS CONN,			1	1	
5	066155	DECAL PIN OUT / JCT BOX W/MUX			1	1	
6	502780	SCREW CAP HEX M8-1.25x25 SS BK			4	4	
7	5001161	WASHER LO SPT 8.1x14.8x2.0 SS-304			4	4	
8	5001448	WASHER FL .343x.875x.062 SS18-8			8	8	
9	502568	SCREW MA PAN PH M6-1.0x20 EMN			2	2	
10	500411	WASHER FL .260x.697x.050 SS			2	2	
11	966171	NUT HEX NYRT M8x1.25 SS			4	4	
12	560422	BLOCK, TERMINAL / 1 STUD 3/8-16 / BLACK			1	1	
13	067035	DECAL / VEC REAR			1	1	
14	563698	VEC DISTRIBUTION MODULE / REAR JCT BOX			1	1	
. NS	564104	. COVER / VEC BOX			1	1	
. NS	563269	. RELAY 24V S.P.D.T. W/RESISTOR /			3	3	
. NS	563004	. FUSE / ATM 2 AMPS GREY			1	1	
. NS	563279	. FUSE / ATM 3 AMPS VIOLET			1	1	
. NS	563005	. FUSE / ATM 7.5 AMPS BROWN			1	1	
. NS	563283	. FUSE / ATM 10 AMPS RED			12	12	
. NS	563284	. FUSE / ATM 15 AMPS BLUE			11	11	
. NS	563282	. FUSE / ATM 20 AMPS YELLOW			9	9	
. NS	563153	. FUSE / ATM 25 AMPS NATURAL			6	6	
. NS	563165	. FUSE / ATM 30 AMPS GREEN			1	1	
. NS	564464	. MINI BREAKER / 20 AMPS / SERIES 223			1	1	
. NS	563181	. CONNECTOR / SH 8C / YELLOW / BUSSMANN 32006-E21			1	1	
. NS	563182	. CONNECTOR / SH 8C / ORANGE / BUSSMANN 32006-G21			1	1	
. NS	563183	. CONNECTOR / SH 8C / RED / BUSSMANN 32006-F21			1	1	
. NS	563184	. CONNECTOR / SH 8C / GREEN / BUSSMANN 32006-C21			1	1	
. NS	563185	. CONNECTOR / SH 8C / BLACK / BUSSMANN 32006-A21			1	1	
. NS	563186	. CONNECTOR / SH 8C / GREY / BUSSMANN 32006-B21			1	1	
. NS	563187	. CONNECTOR / SH 8C / BROWN / BUSSMANN 32006-H21			1	1	
. NS	563448	. CONNECTOR / SH 8C / BLUE / BUSSMANN 32006-D21			1	1	
. NS	19518268	. COVER RUBBER RED			2	2	
15	563439	REGULATOR ASSY 24V / W/5 SCREWS			1	1	
16	563218	JUNCTION BLOCK W/5 STUDS			1	1	
19	563030	BATTERY 12V/930 CCA / GR31			4	4	
20	382216	ATTACHMENT BATTERIES LONG			1	1	
21	382217	ATTACHMENT BATTERIES SHORT			1	1	
22	5060074	TAPE RUB ADH1 URE 3/8" X 2" X 30' / GREY 1820			AR	AR	
23	382192	COVER PROTECTOR BATTERIES			1	1	
24	382215	COVER PROTECTOR BREAKERS			1	1	

From 7-9096 To 8-9339		Date:07/2024	PAGE:Y2-0615-51

BATTERIES INSTALLATION - MTH WITH / MUX

Item#	Part	Description	XLII 45	XLII MTH40	XLII MTH45	XLII MTH45E	NOTES
25	067024	DECAL / BREAKERS			1	1	
26	062682	DECAL / "BOOSTER BLOCK" / ENGLISH & FRANCAIS			1	1	
27	563334	EQUALIZER "VANNER" 100AMPS			1	1	
28	382210	BOOSTER PLATE			1	1	
30	966171	NUT HEX NYRT M8x1.25 SS			4	4	
31	500270	WASHER FL .406x1.000x.063 SS			5	5	
32	502655	SCREW CAP HEX M10-1.5x25 SS BK			3	3	
33	5001180	NUT HEX NYRT #10-24 SS			4	4	
34	380671	TRAY, BATTERIES			1	1	
35	5001522	NUT HEXF LO 3/8-16 SS			1	1	
40	066783	CABLE ASSY TO REAR "VEC"			1	1	
41	382366	PANEL MOUNTING			1	1	
50	**Y2-0600-52**	**WIRING HARNESS - MTH W/MUX DIAGRAM D-061080**					
51	**Y2-0620-50**	**REAR JUNCTION BOX ASSY - MTH WITH MUX (D380244)**					

From Y-7046 To 7-9095		Date:07/2024	PAGE:Y2-0615-60
BATTERIES INSTALLATION - MTH-45'			

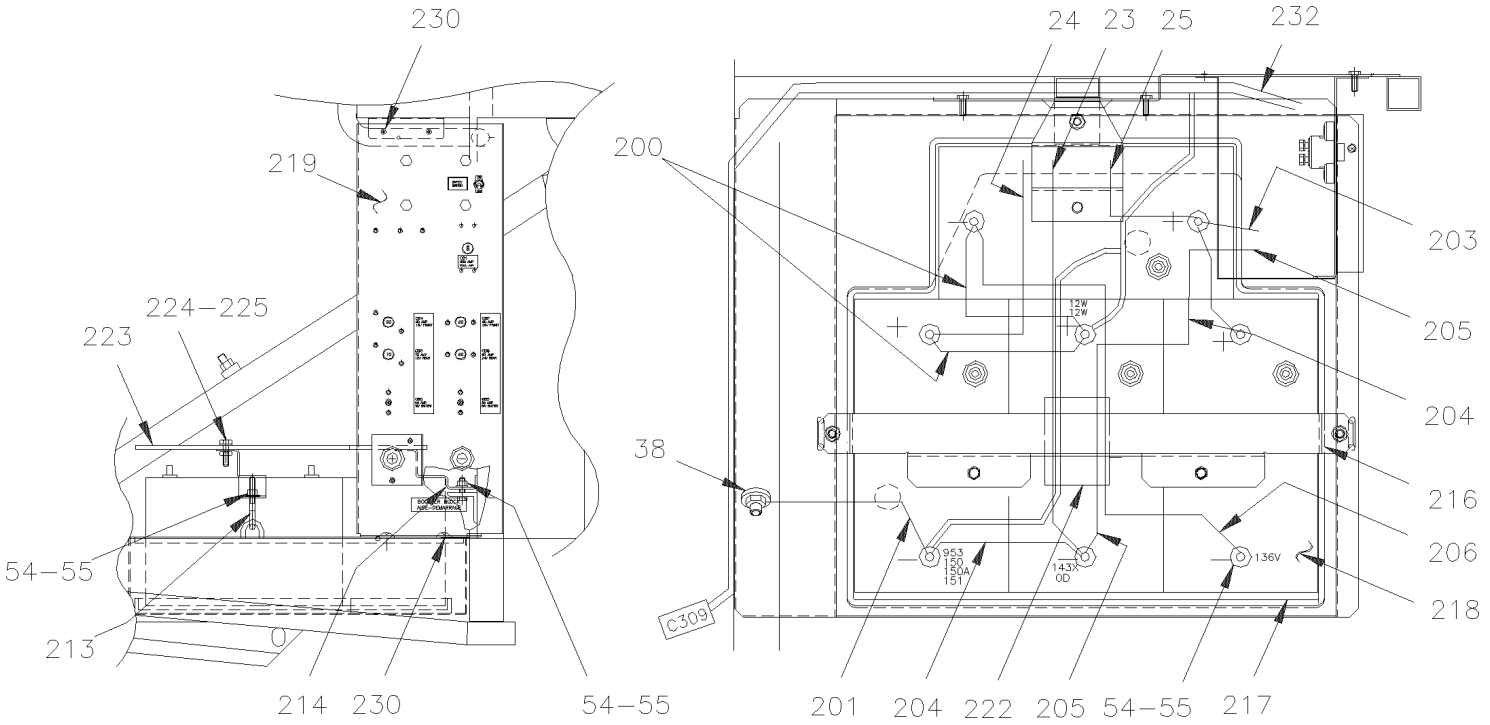

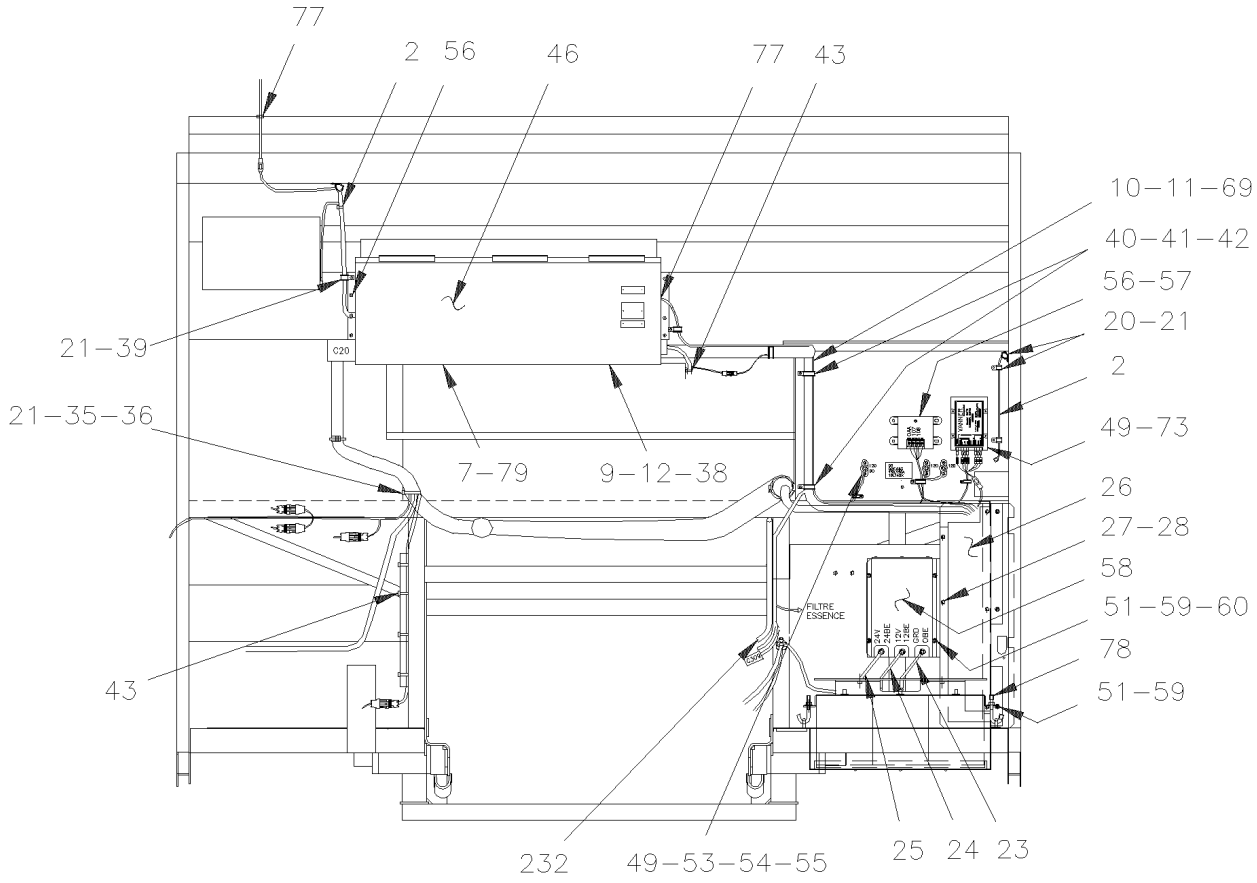

From Y-7046 To 7-9095		Date:07/2024	PAGE:Y2-0615-60

BATTERIES INSTALLATION - MTH-45'

Item#	Part	Description	XLII 45	XLII MTH40	XLII MTH45	XLII MTH45E	NOTES
2	064793	WIRING HARNESS ENGINE COMPARTMENT To 2-7229			1		
2	065285	WIRING HARNESS ENGINE COMPARTMENT From 2-7230 To 2-7843			1		
2	065667	WIRING HARNESS ENGINE COMPARTMENT From 2-7844 To 3-8164			1		
2	065766	WIRING HARNESS ENGINE COMPARTMENT From 4-8165 To 5-8358			1		
2	065970	WIRING HARNESS ENGINE COMPARTMENT From 5-8359 To 5-8644			1		
2	066350	WIRING HARNESS ENGINE COMPARTMENT From 5-8645			1		
7	5001204	SCREW TP FL PH #6x1 1/4 Z050			4		
9	561916	NUT, SPEED			2		
10	064925	CABLE ASSY #12VR			1		
11	063416	CABLE ASSY #24VR			1		
12	062849	CABLE ASSY # 0-8			1		
20	952625	CLAMP / 3/8" I.D.			13		
21	500879	SCREW TP PAN PH #10x1 Z050			45		
23	063411	CABLE ASSY / #0VA To 3-8146			1		
23	065815	CABLE ASSY #0VA From 3-8147			1		
24	063415	CABLE ASSY / #12VA To 3-8146			1		
24	065817	CABLE ASSY #12VA From 3-8147			1		
25	063414	CABLE ASSY / #24VA To 3-8146			1		
25	065816	CABLE ASSY #24VA From 3-8147			1		
26	381881	BREAKER PROTECTOR			1		
27	502500	SCREW TC BDG PH #8-32x1/2 CJ			5		
28	500593	WASHER FL .200x.437x.036 BR			5		
35	980464	TIE CABLE BK 385 X 7.6			13		
36	504013	TIE MOUNT / 1/4" X 1/4" I.D.			9		
38	500968	NUT HEX STO 1/2-13 Z050			2		
39	952631	CLAMP / 3/4" I.D.			7		
40	952629	CLAMP / 5/8" I.D.			5		
41	952627	CLAMP / 1/2" I.D.			4		
42	952635	CLAMP / 1" I.D.			7		
43	504637	CABLE TIE / 3/16" x 13"			20		
46	**Y2-0620-00**	**REAR JUNCTION BOX ASSY**					
49	500641	SCREW TP PAN PH #8x3/4 Z050			26		
51	500473	WASHER LO SPT .262x.489x.062 Z050			6		
53	560422	BLOCK, TERMINAL / 1 STUD 3/8-16 / BLACK			3		
54	502616	WASHER LO SPT 10.2x18.1x2.2 SS			8		
55	500102	NUT HEX 3/8-16 SS			8		
56	500642	SCREW TP PAN PH #10x3/4 Z050			6		
57	562775	REGULATOR ASSY 24V / W/4 SCREWS To 3-8164			1		
57	563439	REGULATOR ASSY 24V / W/5 SCREWS From 4-8165			1		
57	564017	NOISE SUPPRESSOR CONDENSATOR / STAMPED			1		
. NS	MI06-04	. SEE MAINTENANCE INFORMATION			1		
58	562970	EQUALIZER "VANNER" 100AMPS To 1-7407			1		

From Y-7046 To 7-9095		Date:07/2024	PAGE:Y2-0615-60

BATTERIES INSTALLATION - MTH-45'

Item#	Part	Description	XLII 45	XLII MTH40	XLII MTH45	XLII MTH45E	NOTES
58	563130	EQUALIZER "VANNER" 100AMPS From 1-7408 To 3-8109			1		
58	563334	EQUALIZER "VANNER" 100AMPS From 3-8110			1		
59	500769	NUT HEX 1/4-20 Z050			4		
60	500441	WASHER FL .312x.734x.065 Z050			4		
69	562333	TIE MOUNT BAR / 5/8" X 8" (5 TIE HOLDER)			2		
73	563032	MONITOR / BATTERY EQUALIZER			1		
77	680025	CAULKING STRIP 3/16" O.D. X 14'			1		
78	504645	PROTECTOR CAP / BLACK / .313 I.D. x .500			2		
79	065290	HEAT DETECTOR "THERMO-DISK"			2		
200	062371	CABLE ASSY / B + TO B +			2		
201	063410	CABLE ASSY / B - TO GROUND			1		
203	064929	CABLE ASSY #24			1		
204	061180	CABLE ASSY / B - TO B -			2		
205	063406	CABLE ASSY / B - TO BOOSTER BLOCK			1		
206	061036	CABLE ASSY / B - TO B -			1		
213	381755	FIXATION ROD			2		
214	381756	HOLDING BRACKET			1		
216	381753	HOLDING BRACKET			1		
217	380671	TRAY, BATTERIES			1		
218	563030	BATTERY 12V/930 CCA / GR31			4		
219	**Y2-0616-50**	**BREAKER PANEL - MTH**					
222	Call order desk	INSULATING TUBE 4"			1		P
223	381510	BATTERIES PROTECTOR			1		
224	502655	SCREW CAP HEX M10-1.5x25 SS BK			3		
225	500270	WASHER FL .406x1.000x.063 SS			3		
230	502526	SCREW TC BDG PH #12-24x3/4 Z050			2		
232	063894	CABLE ASSY #101 To 3-8120			1		
232	065913	CABLE ASSY #101 From 3-8121			1		
		P) CALL ORDER DESK FOR SPECIFIC APPLICATION (V.I.N.)					

From Y-7046 To 7-9095		Date:07/2024	PAGE:Y2-0616-00
JUNCTION BOX COMPONENTS, RELAY & BREAKER			

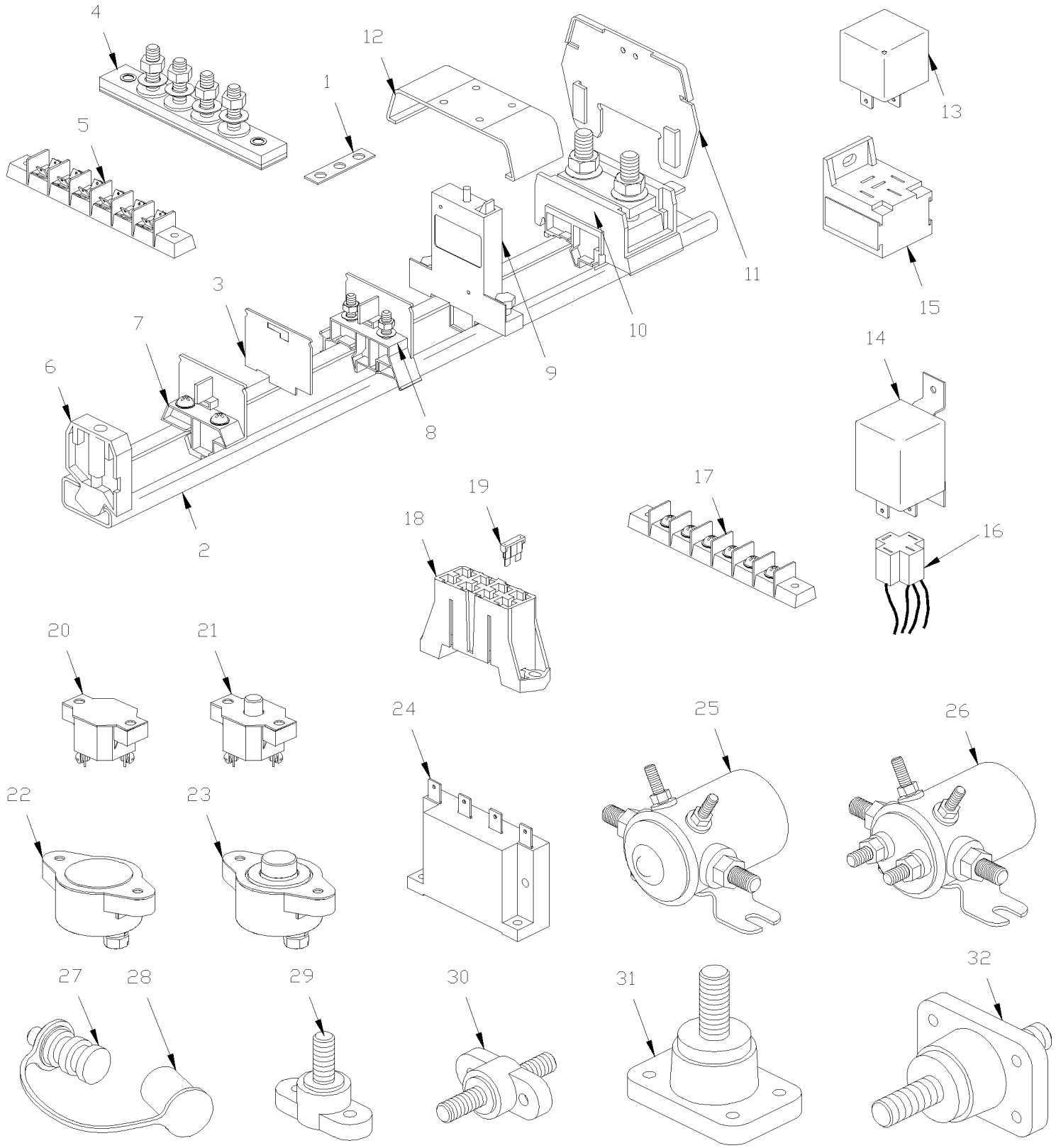

From Y-7046 To 7-9095		Date:07/2024	PAGE:Y2-0616-00

JUNCTION BOX COMPONENTS, RELAY & BREAKER

Item#	Part	Description	XLII 45	XLII MTH40	XLII MTH45	XLII MTH45E	NOTES
1	381813	BUS BAR / W/2 HOLES 25MM	AR	AR	AR	AR	
1	381814	BUS BAR / W/3 HOLES 38MM	AR	AR	AR	AR	
1	381815	BUS BAR / W/4 HOLES 51MM	AR	AR	AR	AR	
1	381816	BUS BAR / W/4 HOLES 64MM	AR	AR	AR	AR	
1	381818	BUS BAR / W/4 HOLES 103MM	AR	AR	AR	AR	
1	381817	BUS BAR / W/6 HOLES 77MM	AR	AR	AR	AR	
1	381819	BUS BAR / W/8 HOLES 103MM	AR	AR	AR	AR	
1	381820	BUS BAR / W/9 HOLES 117MM	AR	AR	AR	AR	
1	880027	BUS BAR / W/10 HOLES 128MM	AR	AR	AR	AR	
2	880026	RAIL SUPPORT / 2 METERS	AR	AR	AR	AR	
2	381300	RAIL SUPPORT / 45MM	AR	AR	AR	AR	
2	380927	RAIL SUPPORT / 72MM	AR	AR	AR	AR	
2	380904	RAIL SUPPORT / 80MM	AR	AR	AR	AR	
2	381203	RAIL SUPPORT / 100MM	AR	AR	AR	AR	
2	380905	RAIL SUPPORT / 150MM	AR	AR	AR	AR	
2	381249	RAIL SUPPORT / 155MM	AR	AR	AR	AR	
2	380964	RAIL SUPPORT / 171MM	AR	AR	AR	AR	
2	380839	RAIL SUPPORT / 180MM	AR	AR	AR	AR	
2	380883	RAIL SUPPORT / 200MM	AR	AR	AR	AR	
2	381638	RAIL SUPPORT / 209MM	AR	AR	AR	AR	
2	380885	RAIL SUPPORT / 225MM	AR	AR	AR	AR	
2	380793	RAIL SUPPORT / 230MM	AR	AR	AR	AR	
2	380751	RAIL SUPPORT / 280MM	AR	AR	AR	AR	
2	380756	RAIL SUPPORT / 290MM	AR	AR	AR	AR	
2	380712	RAIL SUPPORT / 315MM	AR	AR	AR	AR	
2	380838	RAIL SUPPORT / 320MM	AR	AR	AR	AR	
2	380937	RAIL SUPPORT / 324MM	AR	AR	AR	AR	
2	380914	RAIL SUPPORT / 350MM	AR	AR	AR	AR	
2	380884	RAIL SUPPORT / 360MM	AR	AR	AR	AR	
2	381124	RAIL SUPPORT / 460MM	AR	AR	AR	AR	
2	381123	RAIL SUPPORT / 525MM	AR	AR	AR	AR	
2	380713	RAIL SUPPORT / 605MM	AR	AR	AR	AR	
2	380752	RAIL SUPPORT / 1050MM	AR	AR	AR	AR	
3	561728	END CLOSING	AR	AR	AR	AR	
4	560112	JUNCTION BLOCK W/2 STUDS	AR	AR	AR	AR	
4	560113	JUNCTION BLOCK W/4 STUDS	AR	AR	AR	AR	
4	562504	JUNCTION BLOCK W/6 STUDS	AR	AR	AR	AR	
4	560291	JUNCTION BLOCK W/8 STUDS	AR	AR	AR	AR	
4	560116	JUNCTION BLOCK W/10 STUDS	AR	AR	AR	AR	
5	562373	CONNECTOR, MULTIPLE BLADE	AR	AR	AR	AR	
6	561729	STOPPER	AR	AR	AR	AR	
NS	500583	. SCREW TP PAN PH #6x1/2 Z050	1	1	1	1	

From Y-7046 To 7-9095		Date:07/2024	PAGE:Y2-0616-00

JUNCTION BOX COMPONENTS, RELAY & BREAKER

Item#	Part	Description	XLII 45	XLII MTH40	XLII MTH45	XLII MTH45E	NOTES
7	381236	DUMMY ASSY W/SCREW	AR	AR	AR	AR	
NS	562198	. BLOCK JUNCTION	1	1	1	1	
NS	500583	. SCREW TP PAN PH #6x1/2 Z050	2	2	2	2	
NS	500438	. WASHER FL .187x.437x.050 Z050	2	2	2	2	
8	561726	BLOCK JUNCTION	AR	AR	AR	AR	
9	690356	BREAKER 1AMP / 24V /	AR	AR	AR	AR	
9	563382	BREAKER 1AMP / 24V /	AR	AR	AR	AR	
9	561797	BREAKER 3AMPS / 24V /	AR	AR	AR	AR	
9	561790	BREAKER 6AMPS / 24V /	AR	AR	AR	AR	
9	561791	BREAKER 8AMPS / 24V /	AR	AR	AR	AR	
9	561792	BREAKER 10AMPS / 24V /	AR	AR	AR	AR	
9	561793	BREAKER 15AMPS / 24V /	AR	AR	AR	AR	
9	561794	BREAKER 20AMPS / 24V /	AR	AR	AR	AR	
9	561795	BREAKER 25AMPS / 24V /	AR	AR	AR	AR	
NS	502660	. SCREW QUARTER TURN	2	2	2	2	
10	561727	JUNCTION BLOCK	AR	AR	AR	AR	
NS	500615	. NUT HEX M8-1.25 BR	2	2	2	2	
11	561731	COVER SUPPORT	AR	AR	AR	AR	
12	561730	COVER / PROTECTOR / 1 BLOCK	AR	AR	AR	AR	
12	561732	COVER / PROTECTOR / 2 BLOCKS	AR	AR	AR	AR	
12	562024	COVER / PROTECTOR / 3 BLOCKS	AR	AR	AR	AR	
		FOR RELAY IDENTIFICATION, SEE NUMBER					
		STAMPED ON / BOSCH # / POTTER BRUMFIELD #					
13	562751	RELAY 6V S.P.D.T.	AR	AR	AR	AR	
13	561538	RELAY 12V S.P.D.T. V 415 F11	AR	AR	AR	AR	
13	561706	RELAY 12V S.P.D.T. W/DIODE /	AR	AR	AR	AR	
13	562092	RELAY 12V S.P.D.T. W/DIODE / To 5-8577	AR	AR	AR	AR	
13	563337	RELAY 12V S.P.D.T. W/RESISTOR / From 5-8578	AR	AR	AR	AR	
13	561182	RELAY 24V S.P.S.T. N.O. VF4-11H11	AR	AR	AR	AR	
13	561230	RELAY 24V S.P.D.T. VF4-15H	AR	AR	AR	AR	
13	561557	RELAY 24V S.P.D.T. N.O.	AR	AR	AR	AR	
13	561707	RELAY 24V S.P.D.T. W/RESISTOR / To 5-8577	AR	AR	AR	AR	
13	563332	RELAY 24V S.P.D.T. W/RESISTOR / "VOLVO" (20374662) From 5-8578	AR	AR	AR	AR	
14	561928	RELAY 12V S.P.D.T. / 50 AMPS N.O. VF7-41F	AR	AR	AR	AR	
14	561991	RELAY 24V S.P.S.T. / 70 AMPS N.O.	AR	AR	AR	AR	
15	561183	RELAY BASE / TAB TERMINAL / BOSCH 3334485008	AR	AR	AR	AR	
16	562367	CONNECTOR / TAB HOUSING 4C / POTTER BRUMFIELD VCF7-1000	AR	AR	AR	AR	
16	561908	TAB RECEPTACLE TERMINAL / 22-18 / AMP 60295-2	AR	AR	AR	AR	
16	561108	TAB RECEPTACLE TERMINAL / 18-14 / AMP 42238-2	AR	AR	AR	AR	
16	561181	TAB RECEPTACLE TERMINAL / 12 / AMP 60508-2	AR	AR	AR	AR	

From Y-7046 To 7-9095		Date:07/2024	PAGE:Y2-0616-00

JUNCTION BOX COMPONENTS, RELAY & BREAKER

Item#	Part	Description	XLII 45	XLII MTH40	XLII MTH45	XLII MTH45E	NOTES
16	562368	TAB TERMINAL / 12-8 / AMP 280756-4	AR	AR	AR	AR	
17	562173	JUNCTION BLOCK W/10 STUDS	AR	AR	AR	AR	
17	560116	JUNCTION BLOCK W/10 STUDS	AR	AR	AR	AR	
17	560291	JUNCTION BLOCK W/8 STUDS	AR	AR	AR	AR	
17	562504	JUNCTION BLOCK W/6 STUDS	AR	AR	AR	AR	
17	560113	JUNCTION BLOCK W/4 STUDS	AR	AR	AR	AR	
17	560112	JUNCTION BLOCK W/2 STUDS	AR	AR	AR	AR	
18	562621	FUSE BLOCK W/4 LEDS & WIRES	AR	AR	AR	AR	
. NS	381960	. PROTECTOR COVER FUSE HOLDER 49MM x 62MM "OPTION SPECIAL"	AR	AR	AR	AR	
19	562597	FUSE / ATO 1AMP BLACK	AR	AR	AR	AR	
19	562598	FUSE / ATO 2 AMPS GREY	AR	AR	AR	AR	
19	562599	FUSE / ATO 3 AMPS VIOLET	AR	AR	AR	AR	
19	562600	FUSE / ATO 4 AMPS PINK	AR	AR	AR	AR	
19	562259	FUSE / ATO 5 AMPS AMBER	AR	AR	AR	AR	
19	562602	FUSE / ATO 7.5 AMPS BROWN	AR	AR	AR	AR	
19	562407	FUSE / ATO 10 AMPS RED	AR	AR	AR	AR	
19	562604	FUSE / ATO 15 AMPS BLUE	AR	AR	AR	AR	
19	562605	FUSE / ATO 20 AMPS YELLOW	AR	AR	AR	AR	
19	562606	FUSE / ATO 25 AMPS NATURAL	AR	AR	AR	AR	
19	562396	FUSE / ATO 30 AMPS GREEN	AR	AR	AR	AR	
19	562608	FUSE / ATO 35 AMPS BLUE-GREEN	AR	AR	AR	AR	
19	562609	FUSE / ATC 40 AMPS ORANGE	AR	AR	AR	AR	
20	560295	BREAKER 6AMPS / 24V /	AR	AR	AR	AR	
20	560296	BREAKER 10AMPS / 24V /	AR	AR	AR	AR	
20	560297	BREAKER 20AMPS / 24V /	AR	AR	AR	AR	
21	870690	BREAKER 30AMPS / 24V /	AR	AR	AR	AR	
21	870093	BREAKER 40AMPS / 24V /	AR	AR	AR	AR	
22	560794	BREAKER 90AMPS / 24V /	AR	AR	AR	AR	
22	560308	BREAKER 150AMPS / 24V /	AR	AR	AR	AR	
23	560703	BREAKER 40AMPS / 24V /	AR	AR	AR	AR	
23	562686	BREAKER 40AMPS / 24V /	AR	AR	AR	AR	
23	561767	BREAKER 70AMPS / 24V /	AR	AR	AR	AR	
23	562687	BREAKER 70AMPS / 24V /	AR	AR	AR	AR	
23	560298	BREAKER 90AMPS / 24V /	AR	AR	AR	AR	
23	562683	BREAKER 90AMPS / 24V /	AR	AR	AR	AR	
23	560465	BREAKER 105AMPS / 24V /	AR	AR	AR	AR	
23	562685	BREAKER 105AMPS / 24V /	AR	AR	AR	AR	
23	562397	BREAKER 120AMPS / 24V /	AR	AR	AR	AR	
23	562688	BREAKER 120AMPS / 24V /	AR	AR	AR	AR	
23	560299	BREAKER 150AMPS / 24V /	AR	AR	AR	AR	
23	562684	BREAKER 150AMPS / 24V /	AR	AR	AR	AR	
NS	560838	BREAKER 200AMPS / 24V /	AR	AR	AR	AR	

From Y-7046 To 7-9095		Date:07/2024	PAGE:Y2-0616-00

JUNCTION BOX COMPONENTS, RELAY & BREAKER

Item#	Part	Description	XLII 45	XLII MTH40	XLII MTH45	XLII MTH45E	NOTES
24	560772	TIME DELAY RELAY	AR	AR	AR	AR	
25	560407	SWITCH MAGNETIC / 24V S.P.S.T. / 50AMPS N.O.	AR	AR	AR	AR	
25	561005	SWITCH MAGNETIC / 24V S.P.S.T. / 200AMPS N.O.	AR	AR	AR	AR	
26	561014	SWITCH MAGNETIC / 24V D.P.S.T. / 200AMPS N.O.	AR	AR	AR	AR	
27	561856	BOOSTER BLOCK, REMOTE / RED	1	1	1	1	
27	561857	BOOSTER BLOCK, REMOTE / BLACK	1	1	1	1	
28	562691	. PROTECTOR CAP / RED	1	1	1	1	
28	562692	. PROTECTOR CAP / BLACK	1	1	1	1	
NS	381210	SEPARATOR / FIBERGLASS RED	AR	AR	AR	AR	
29	560422	BLOCK, TERMINAL / 1 STUD 3/8-16 / BLACK	AR	AR	AR	AR	
30	561102	BLOCK, JUNCTION / 2 STUD 3/8-16 / BLACK	AR	AR	AR	AR	
31	560177	BLOCK, TERMINAL / 1 STUD 1/2-13 / BLACK	AR	AR	AR	AR	
32	560176	BLOCK, JUNCTION / 2 STUD 1/2-13 / RED	AR	AR	AR	AR	

From 7-9096 To 8-9339		Date:07/2024	PAGE:Y2-0616-01

JUNCTION BOX COMPONENTS, RELAY & BREAKER / MUX

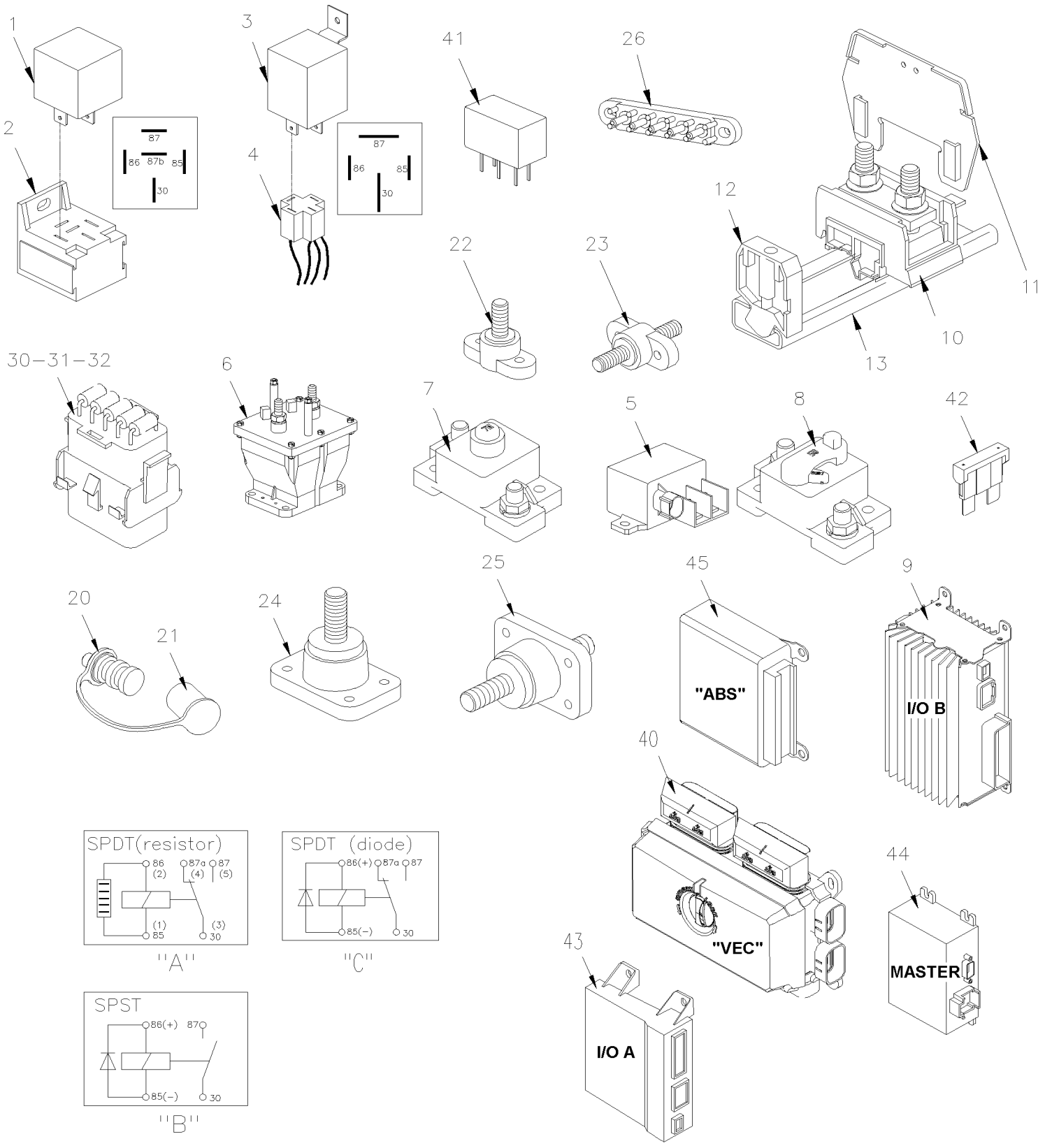

From 7-9096 To 8-9339		Date:07/2024	PAGE:Y2-0616-01

JUNCTION BOX COMPONENTS, RELAY & BREAKER / MUX

Item#	Part	Description	XLII 45	XLII MTH40	XLII MTH45	XLII MTH45E	NOTES
1	563332	RELAY 24V S.P.D.T. W/RESISTOR / "VOLVO" (20374662)			AR	AR	A
1	561707	RELAY 24V S.P.D.T. W/RESISTOR /			1	1	C
1	563337	RELAY 12V S.P.D.T. W/RESISTOR /			AR	AR	A
2	561183	RELAY BASE / TAB TERMINAL / BOSCH 3334485008			AR	AR	
3	561991	RELAY 24V S.P.S.T. / 70 AMPS N.O.			AR	AR	B
4	562367	CONNECTOR / TAB HOUSING 4C / POTTER BRUMFIELD VCF7-1000			AR	AR	
5	563348	RELAY POWER 24V 200 AMPS / S.P.S.T. N.O.			AR	AR	
. NS	5001182	. NUT HEX NYRT M6-1.0 SS			1	1	
. NS	502573	. WASHER FL 6.4x12.5x1.6 SS			1	1	
. NS	563409	. CONNECTOR / SUPERSEAL 1.5 SERIES / SH 2C / AMP 282080-1			1	1	
. NS	562607	. SOCKET TERMINAL / 20-16 / AMP 183025-1			1	1	
6	562364	RELAY 24V S.P.S.T. / 300 AMPS N.O. / / BATTERY DISCONNECT			1	1	
7	563704	BREAKER 35AMPS / 24V /			AR	AR	
7	563705	BREAKER 40AMPS / 24V /			AR	AR	
7	563706	BREAKER 60AMPS / 24V /			AR	AR	
7	563707	BREAKER 70AMPS / 24V /			AR	AR	
7	563708	BREAKER 90AMPS / 24V /			AR	AR	
8	563710	BREAKER 50AMPS / 24V /			AR	AR	
8	563709	BREAKER 150AMPS / 24V /			AR	AR	
9	563273	I/O B-MODULE VOLVO MULTIPLEX / ALUMINUM To 7-9116			AR	AR	
. NS	563132	. CONNECTOR / SH 2C / YAZAKI 7283-6458-40 To 7-9116			1	1	
. NS	563133	. CONNECTOR / JUNIOR POWER TIMER / SH 29C / AMP 1-963449-2 To 7-9116			1	1	
. NS	562957	. CONNECTOR / SH 5C / GREEN / JAE IL-AG5-5S-S3C1 To 7-9116			1	1	
9	565865	I/O B-MODULE VOLVO MULTIPLEX / ALUMINUM From 7-9117			AR	AR	
. NS	563132	. CONNECTOR / SH 2C / YAZAKI 7283-6458-40 From 7-9117			1	1	
. NS	563133	. CONNECTOR / JUNIOR POWER TIMER / SH 29C / AMP 1-963449-2 From 7-9117			1	1	
. NS	562957	. CONNECTOR / SH 5C / GREEN / JAE IL-AG5-5S-S3C1 From 7-9117			1	1	
10	561727	JUNCTION BLOCK			AR	AR	
11	561731	COVER SUPPORT			AR	AR	
NS	562024	COVER / PROTECTOR / 3 BLOCKS			1	1	
12	562645	STOPPER "U" RAIL			AR	AR	
13	382184	RAIL SUPPORT "U" SHAPE 112MM			AR	AR	
13	382187	RAIL SUPPORT "U" SHAPE 400MM			AR	AR	
20	561856	BOOSTER BLOCK, REMOTE / RED			AR	AR	
20	561857	BOOSTER BLOCK, REMOTE / BLACK			AR	AR	
21	562691	. PROTECTOR CAP / RED			1	1	
21	562692	. PROTECTOR CAP / BLACK			1	1	
22	560422	BLOCK, TERMINAL / 1 STUD 3/8-16 / BLACK			AR	AR	
23	561102	BLOCK, JUNCTION / 2 STUD 3/8-16 / BLACK			AR	AR	
24	560177	BLOCK, TERMINAL / 1 STUD 1/2-13 / BLACK			AR	AR	
NS	562024	COVER / PROTECTOR / 3 BLOCKS			AR	AR	
25	560176	BLOCK, JUNCTION / 2 STUD 1/2-13 / RED			AR	AR	

From 7-9096 To 8-9339		Date:07/2024	PAGE:Y2-0616-01

JUNCTION BOX COMPONENTS, RELAY & BREAKER / MUX

Item#	Part	Description	XLII 45	XLII MTH40	XLII MTH45	XLII MTH45E	NOTES
26	563218	JUNCTION BLOCK W/5 STUDS			AR	AR	
NS	500765	NUT HEX #10-32 BR			AR	AR	
30	381145	DIODE ASSY / W/5 3AMPS			AR	AR	
31	382097	DIODE ASSY / W/3 3AMPS & 2 RESISTORS 270 OHMS			AR	AR	
32	382175	DIODE ASSY / W/3 3AMPS & 2 RESISTORS 100 OHMS			AR	AR	
40	563698	VEC DISTRIBUTION MODULE / REAR JCT BOX			1	1	
. NS	564104	. COVER / VEC BOX			1	1	
. NS	563269	. RELAY 24V S.P.D.T. W/RESISTOR /			3	3	
. NS	563004	. FUSE / ATM 2 AMPS GREY			1	1	
. NS	563279	. FUSE / ATM 3 AMPS VIOLET			1	1	
. NS	563005	. FUSE / ATM 7.5 AMPS BROWN			1	1	
. NS	563283	. FUSE / ATM 10 AMPS RED			12	12	
. NS	563284	. FUSE / ATM 15 AMPS BLUE			11	11	
. NS	563282	. FUSE / ATM 20 AMPS YELLOW			9	9	
. NS	563153	. FUSE / ATM 25 AMPS NATURAL			6	6	
. NS	563165	. FUSE / ATM 30 AMPS GREEN			1	1	
. NS	564464	. MINI BREAKER / 20 AMPS / SERIES 223			1	1	
. NS	563181	. CONNECTOR / SH 8C / YELLOW / BUSSMANN 32006-E21			1	1	
. NS	563182	. CONNECTOR / SH 8C / ORANGE / BUSSMANN 32006-G21			1	1	
. NS	563183	. CONNECTOR / SH 8C / RED / BUSSMANN 32006-F21			1	1	
. NS	563184	. CONNECTOR / SH 8C / GREEN / BUSSMANN 32006-C21			1	1	
. NS	563185	. CONNECTOR / SH 8C / BLACK / BUSSMANN 32006-A21			1	1	
. NS	563186	. CONNECTOR / SH 8C / GREY / BUSSMANN 32006-B21			1	1	
. NS	563187	. CONNECTOR / SH 8C / BROWN / BUSSMANN 32006-H21			1	1	
. NS	563448	. CONNECTOR / SH 8C / BLUE / BUSSMANN 32006-D21			1	1	
. NS	19518268	. COVER RUBBER RED			2	2	
40	563674	VEC DISTRIBUTION MODULE / FRONT JCT BOX			1	1	
. NS	564104	. COVER / VEC BOX			1	1	
. NS	563004	. FUSE / ATM 2 AMPS GREY			1	1	
. NS	563279	. FUSE / ATM 3 AMPS VIOLET			14	14	
. NS	563280	. FUSE / ATM 5 AMPS AMBER			2	2	
. NS	563005	. FUSE / ATM 7.5 AMPS BROWN			3	3	
. NS	563283	. FUSE / ATM 10 AMPS RED			6	6	
. NS	563284	. FUSE / ATM 15 AMPS BLUE			9	9	
. NS	563282	. FUSE / ATM 20 AMPS YELLOW			6	6	
. NS	563153	. FUSE / ATM 25 AMPS NATURAL			1	1	
. NS	563165	. FUSE / ATM 30 AMPS GREEN			3	3	
. NS	564464	. MINI BREAKER / 20 AMPS / SERIES 223			1	1	
. NS	563181	. CONNECTOR / SH 8C / YELLOW / BUSSMANN 32006-E21			1	1	
. NS	563182	. CONNECTOR / SH 8C / ORANGE / BUSSMANN 32006-G21			1	1	
. NS	563183	. CONNECTOR / SH 8C / RED / BUSSMANN 32006-F21			1	1	
. NS	563184	. CONNECTOR / SH 8C / GREEN / BUSSMANN 32006-C21			1	1	

From 7-9096 To 8-9339		Date:07/2024	PAGE:Y2-0616-01

JUNCTION BOX COMPONENTS, RELAY & BREAKER / MUX

Item#	Part	Description	XLII 45	XLII MTH40	XLII MTH45	XLII MTH45E	NOTES
. NS	563185	. CONNECTOR / SH 8C / BLACK / BUSSMANN 32006-A21			1	1	
. NS	563186	. CONNECTOR / SH 8C / GREY / BUSSMANN 32006-B21			1	1	
. NS	563187	. CONNECTOR / SH 8C / BROWN / BUSSMANN 32006-H21			1	1	
. NS	563448	. CONNECTOR / SH 8C / BLUE / BUSSMANN 32006-D21			1	1	
. NS	19518268	. COVER RUBBER RED			2	2	
40	563449	VEC DISTRIBUTION MODULE / W/SLIDE-OUT			1	1	
. NS	564104	. COVER / VEC BOX			1	1	
. NS	563004	. FUSE / ATM 2 AMPS GREY			1	1	
. NS	563279	. FUSE / ATM 3 AMPS VIOLET			1	1	
. NS	563280	. FUSE / ATM 5 AMPS AMBER			1	1	
. NS	563005	. FUSE / ATM 7.5 AMPS BROWN			1	1	
. NS	563284	. FUSE / ATM 15 AMPS BLUE			1	1	
. NS	563282	. FUSE / ATM 20 AMPS YELLOW			1	1	
. NS	563153	. FUSE / ATM 25 AMPS NATURAL			1	1	
. NS	563165	. FUSE / ATM 30 AMPS GREEN			1	1	
. NS	563181	. CONNECTOR / SH 8C / YELLOW / BUSSMANN 32006-E21			1	1	
. NS	563182	. CONNECTOR / SH 8C / ORANGE / BUSSMANN 32006-G21			1	1	
. NS	563183	. CONNECTOR / SH 8C / RED / BUSSMANN 32006-F21			1	1	
. NS	563184	. CONNECTOR / SH 8C / GREEN / BUSSMANN 32006-C21			1	1	
. NS	563185	. CONNECTOR / SH 8C / BLACK / BUSSMANN 32006-A21			1	1	
. NS	563186	. CONNECTOR / SH 8C / GREY / BUSSMANN 32006-B21			1	1	
. NS	563187	. CONNECTOR / SH 8C / BROWN / BUSSMANN 32006-H21			1	1	
. NS	563448	. CONNECTOR / SH 8C / BLUE / BUSSMANN 32006-D21			1	1	
. NS	19518268	. COVER RUBBER RED			2	2	
41	563269	. RELAY 24V S.P.D.T. W/RESISTOR /			AR	AR	A V
42	563004	. FUSE / ATM 2 AMPS GREY			AR	AR	V
42	563279	. FUSE / ATM 3 AMPS VIOLET			AR	AR	V
42	563280	. FUSE / ATM 5 AMPS AMBER			AR	AR	V
42	563005	. FUSE / ATM 7.5 AMPS BROWN			AR	AR	V
42	563283	. FUSE / ATM 10 AMPS RED			AR	AR	V
42	563284	. FUSE / ATM 15 AMPS BLUE			AR	AR	V
42	563282	. FUSE / ATM 20 AMPS YELLOW			AR	AR	V
42	563153	. FUSE / ATM 25 AMPS NATURAL			AR	AR	V
42	563165	. FUSE / ATM 30 AMPS GREEN			AR	AR	V
43	563272	I/O A-MODULE VOLVO MULTIPLEX / BLACK To 7-9116			AR	AR	
. NS	562767	. CONNECTOR / SH 30C / GREEN / JAE IL-AG5-30S-D3C1 To 7-9116			1	1	
. NS	562957	. CONNECTOR / SH 5C / GREEN / JAE IL-AG5-5S-S3C1 To 7-9116			1	1	
. NS	563132	. CONNECTOR / SH 2C / YAZAKI 7283-6458-40 To 7-9116			1	1	
43	565864	I/O A-MODULE VOLVO MULTIPLEX / BLACK From 7-9117			AR	AR	
. NS	562767	. CONNECTOR / SH 30C / GREEN / JAE IL-AG5-30S-D3C1 From 7-9117			1	1	
. NS	562957	. CONNECTOR / SH 5C / GREEN / JAE IL-AG5-5S-S3C1 From 7-9117			1	1	
. NS	563132	. CONNECTOR / SH 2C / YAZAKI 7283-6458-40 From 7-9117			1	1	

From 7-9096 To 8-9339		Date:07/2024	PAGE:Y2-0616-01

JUNCTION BOX COMPONENTS, RELAY & BREAKER / MUX

Item#	Part	Description	XLII 45	XLII MTH40	XLII MTH45	XLII MTH45E	NOTES
44	563295	MASTER ID-MODULE VOLVO MULTIPLEX			1	1	
. NS	562794	. CONNECTOR / JUNIOR POWER TIMER / SH 9C / AMP 964561-4			1	1	
44	069538	"MASTER ID" REPLACEMENT WITH "MCM" MODULE			1	1	
. NS	069420	. HARNESS MCM			1	1	
. NS	IS-11003	. SEE INSTRUCTION SHEET			1	1	
45	7770363	CONTROL UNIT 12V / ABS 4 CH / UNPROGRAMMED			1	1	
45	641948P	CONTROL UNIT 12V / ABS 4 CH / PROGRAMMED			1	1	
		A) SEE CONTACT CONFIGURATION "A"					
		B) SEE CONTACT CONFIGURATION "B"					
		C) SEE CONTACT CONFIGURATION "C"					
		V) INSIDE OF "VEC"					

From Y-7046 To 6-8906		Date:07/2024	PAGE:Y2-0616-10
BREAKER PANEL - BUS			

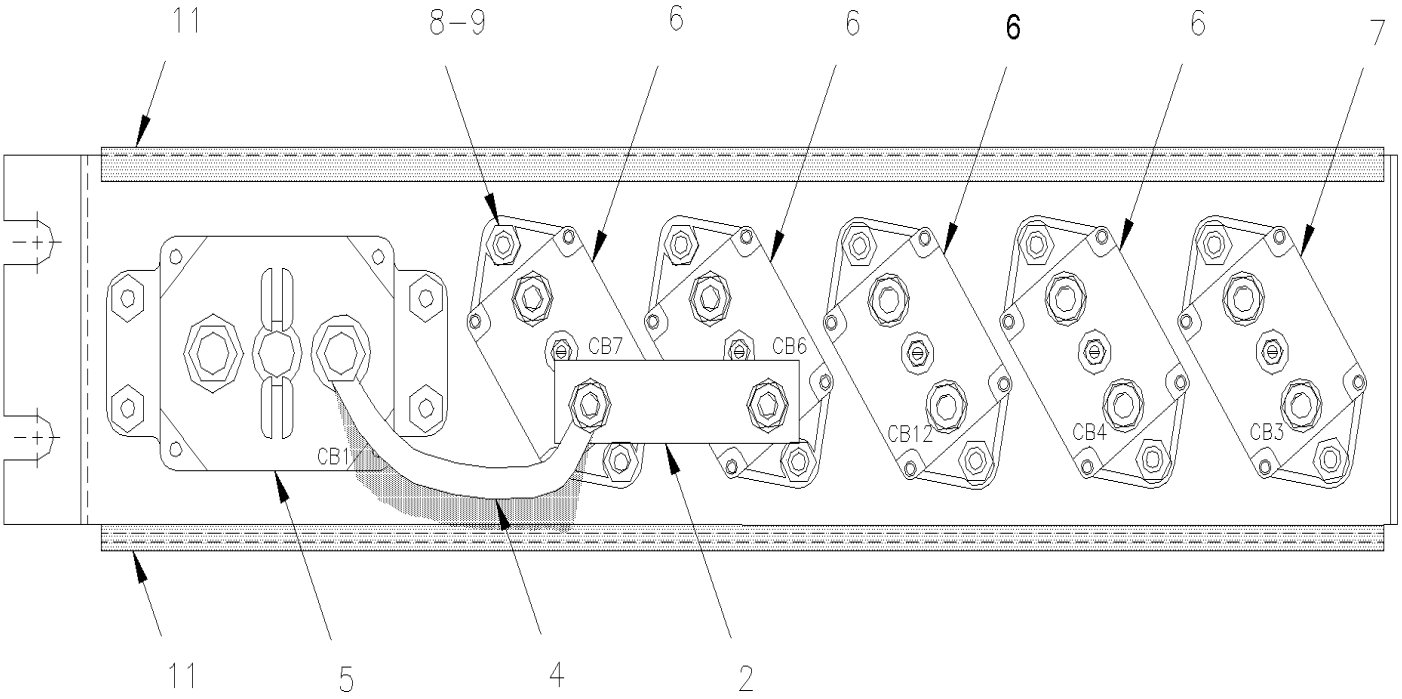

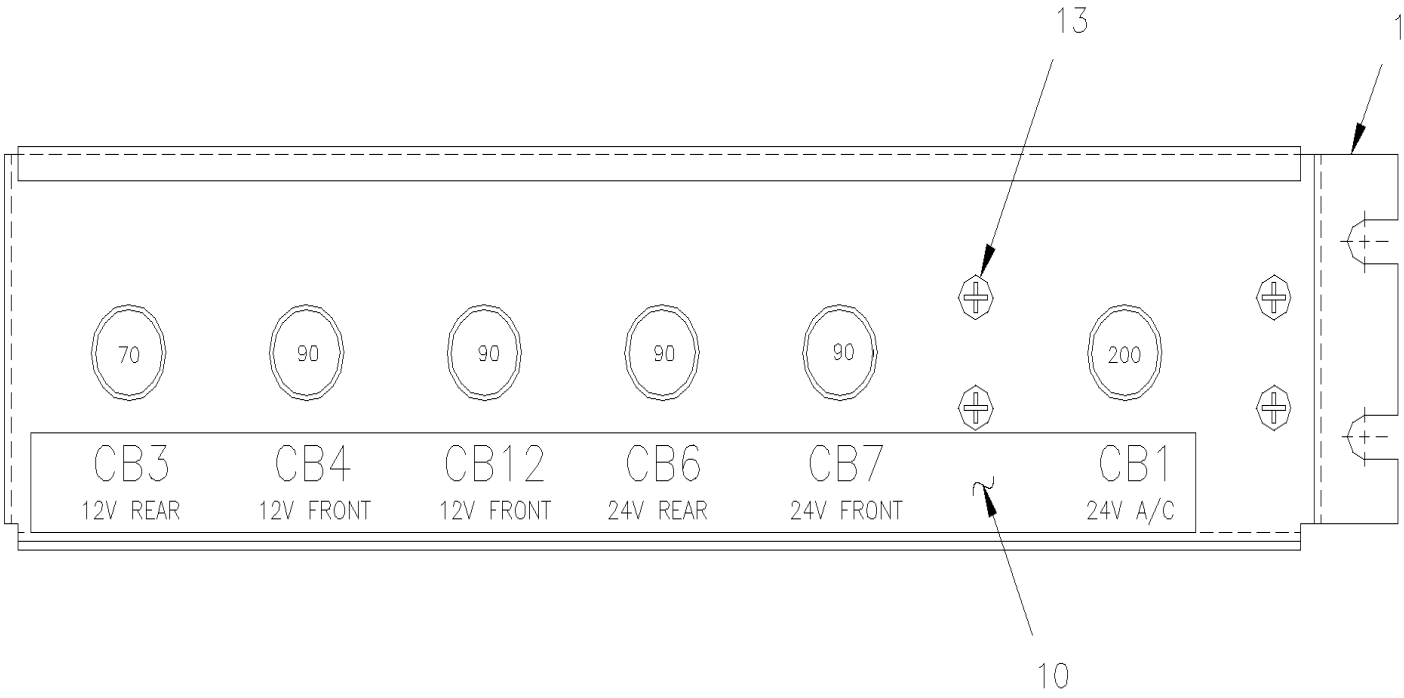

From Y-7046 To 6-8906		Date:07/2024	PAGE:Y2-0616-10

BREAKER PANEL - BUS

Item#	Part	Description	XLII 45	XLII MTH40	XLII MTH45	XLII MTH45E	NOTES
1	381949	BREAKER SUPPORT	1				
2	381717	BUS BAR / W/2 HOLES / 53MM C/C	1				
4	063403	CABLE ASSY / #90	1				
5	560838	BREAKER 200AMPS / 24V /	1				
6	562683	BREAKER 90AMPS / 24V /	3				
7	562687	BREAKER 70AMPS / 24V /	1				
8	502524	NUT HEX M4-0.7 Z050	8				
9	502636	WASHER LO SPT 4.1x7.6x0.9 Z050	8				
10	065354	DECAL BREAKER	1				
11	680066	ADHESIVE / ADBOND #5014 / 23.6ML BOTTLE	AR				
12	506338	RUBBER CHANNEL / 1/16" x 1/4" INT "U" SHAPE / ROUND C.T.L.	AR				
13	500510	SCREW MA BDG PH #10-32x3/4 SS EMN	4				

From Y-7046 To 7-9095		Date:07/2024	PAGE:Y2-0616-50
BREAKER PANEL - MTH			

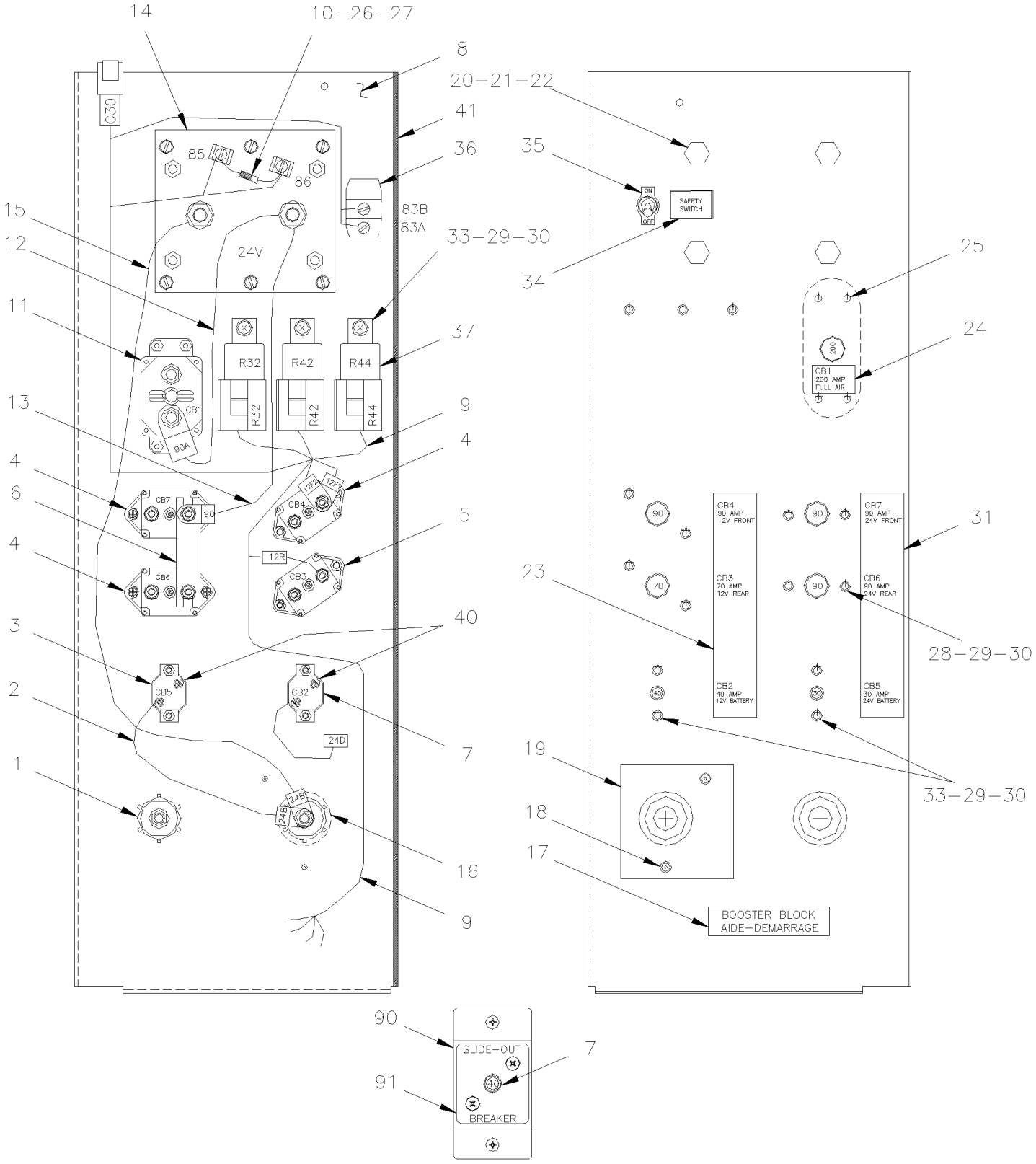

From Y-7046 To 7-9095		Date:07/2024	PAGE:Y2-0616-50

BREAKER PANEL - MTH

Item#	Part	Description	XLII 45	XLII MTH40	XLII MTH45	XLII MTH45E	NOTES
	381903P	BREAKER'S PANEL ASSY		1	1	1	
1	561857	. BOOSTER BLOCK, REMOTE / BLACK		1	1	1	
2	064926	. CABLE ASSY #24D		1	1	1	
3	870690	. BREAKER 30AMPS / 24V /		1	1	1	
4	562683	. BREAKER 90AMPS / 24V /		3	3	3	
5	562687	. BREAKER 70AMPS / 24V /		1	1	1	
6	380059	. BUS BAR / W/2 SLOTS / 3 3/8" C/C		1	1	1	
7	870093	. BREAKER 40AMPS / 24V /		1	1	1	
8	381963	. BREAKER SUPPORT		1	1	1	
9	064924	. WIRING HARNESS RELAY 12V (BATTERIES)		1	1	1	
10	561740	. DIODE / 3AMPS		1	1	1	
11	560838	. BREAKER 200AMPS / 24V /		1	1	1	
12	064928	. CABLE ASSY #90A		1	1	1	
13	064927	. CABLE ASSY #90		1	1	1	
NS	063894	. CABLE ASSY #101 To 3-8120		1	1	1	
NS	065913	. CABLE ASSY #101 From 3-8121		1	1	1	
14	562364	. RELAY 24V S.P.S.T. / 300 AMPS N.O. / / BATTERY DISCONNECT		1	1	1	
15	064930	. CABLE ASSY #24B		1	1	1	
NS	064929	. CABLE ASSY #24		1	1	1	
16	561856	. BOOSTER BLOCK, REMOTE / RED		1	1	1	
17	062682	. DECAL / "BOOSTER BLOCK" / ENGLISH & FRANCAIS		1	1	1	
18	504347	. RIVET POP DOME OE 3/16x1/4 AL		2	2	2	
19	381210	. SEPARATOR / FIBERGLASS RED		1	1	1	
20	5001190	. SCREW CAP HEX 1/4-20x3/4 SS BK		4	4	4	
21	500770	. NUT HEX STO 1/4-20 Z050		4	4	4	
22	500473	. WASHER LO SPT .262x.489x.062 Z050		4	4	4	
23	064960	. DECAL		1	1	1	
24	063422	. DECAL-CBI FULL AIR		1	1	1	
25	500510	. SCREW MA BDG PH #10-32x3/4 SS EMN		1	1	1	
25	381516	. CLOSING PLATE		1	1	1	
26	560082	. RING TERMINAL #10 / 16-14 / INSULATED / AMP 626033-2		2	2	2	
27	560382	. PLASTIC TUBING / 1/4" / CLEAR		AR	AR	AR	
28	500387	. SCREW MA RND PH #10-24x3/4 Z050		8	8	8	
29	500470	. WASHER LO SPT .193x.334x.047 Z050		15	15	15	
30	500786	. NUT HEX #10-24 Z050		15	15	15	
31	064961	. DECAL		1	1	1	
33	500386	. SCREW MA RND PH #10-24x1/2 Z050		7	7	7	
34	065306	. DECAL "SAFETY SWITCH"		1	1	1	
35	562394	. PLATE, INDICATING (ON/OFF)		1	1	1	
36	562942	. SWITCH / OFF-ON / S.P.S.T.		1	1	1	
37	561991	. RELAY 24V S.P.S.T. / 70 AMPS N.O.		3	3	3	
38	500102	. NUT HEX 3/8-16 SS		2	2	2	

From Y-7046 To 7-9095		Date:07/2024	PAGE:Y2-0616-50

BREAKER PANEL - MTH

Item#	Part	Description	XLII 45	XLII MTH40	XLII MTH45	XLII MTH45E	NOTES
39	502616	. WASHER LO SPT 10.2x18.1x2.2 SS		2	2	2	
40	500557	. SCREW MA PAN PH #8-32x3/8 SS		2	2	2	
41	506025	. RUBBER CHANNEL / 1/18" x 5/16" INT "U" SHAPE / SQUARE C.T.L.		AR	AR	AR	
90	690098	SUPPORT BREAKER To 4-8251			1		
90	065910	SUPPORT BREAKER From 4-8252			1		
90	065954	CABLE MAIN SUPPLY / BREAKER From 4-8252			1		
NS	690296	CABLE MAIN SUPPLY / BREAKER To 4-8251			1		
91	690099	DECAL "SLIDE-OUT" BREAKER To 4-8251			1		
91	065923	DECAL "SLIDE-OUT" BREAKER From 4-8252 To 5-8384			1		
91	065989	DECAL "SLIDE-OUT" BREAKER From 5-8385			1		

From Y-7046 To 7-9095		Date:07/2024	PAGE:Y2-0620-00
REAR JUNCTION BOX ASSY			

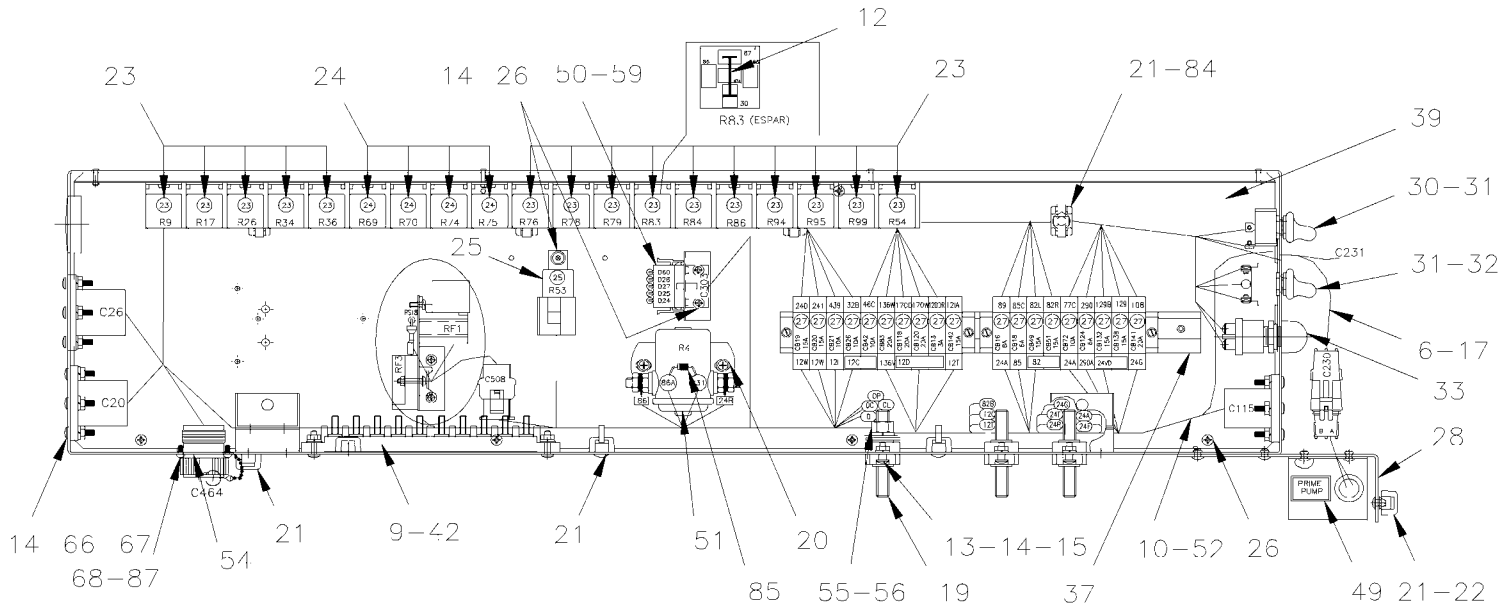

MTH

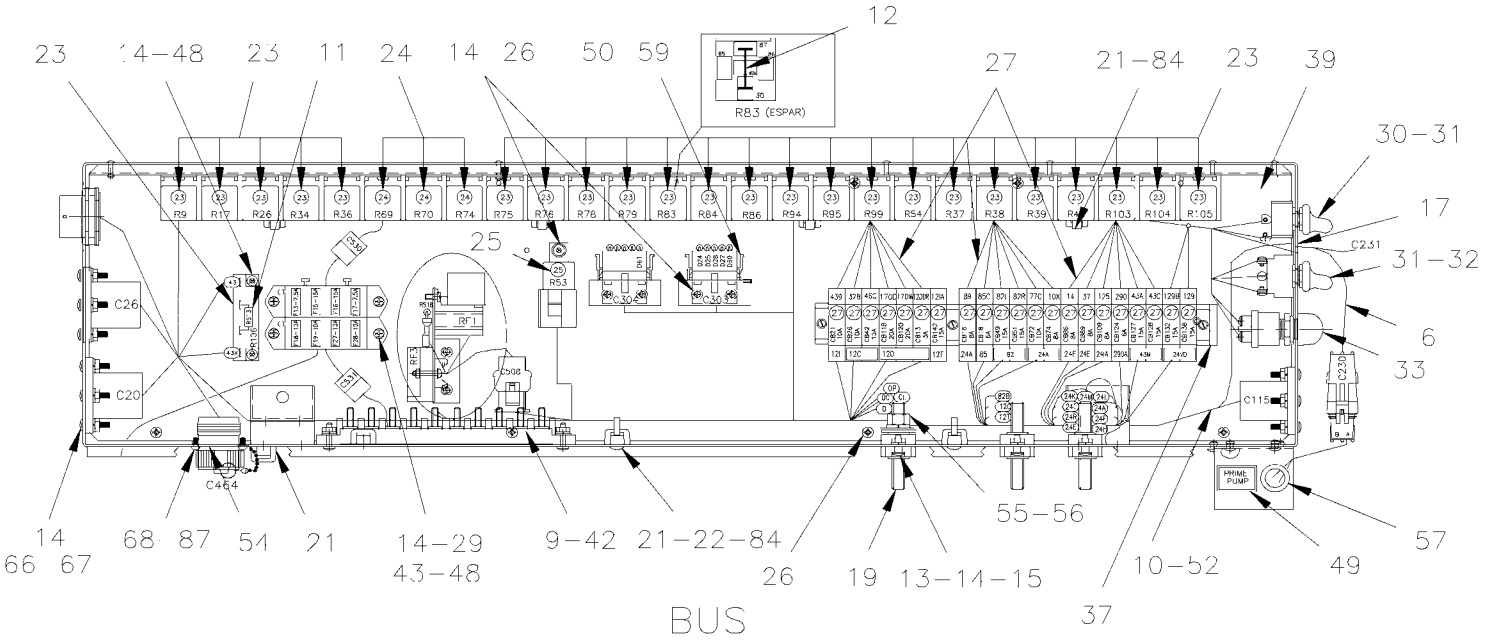

BUS

From Y-7046 To 7-9095		Date:07/2024	PAGE:Y2-0620-00
REAR JUNCTION BOX ASSY			

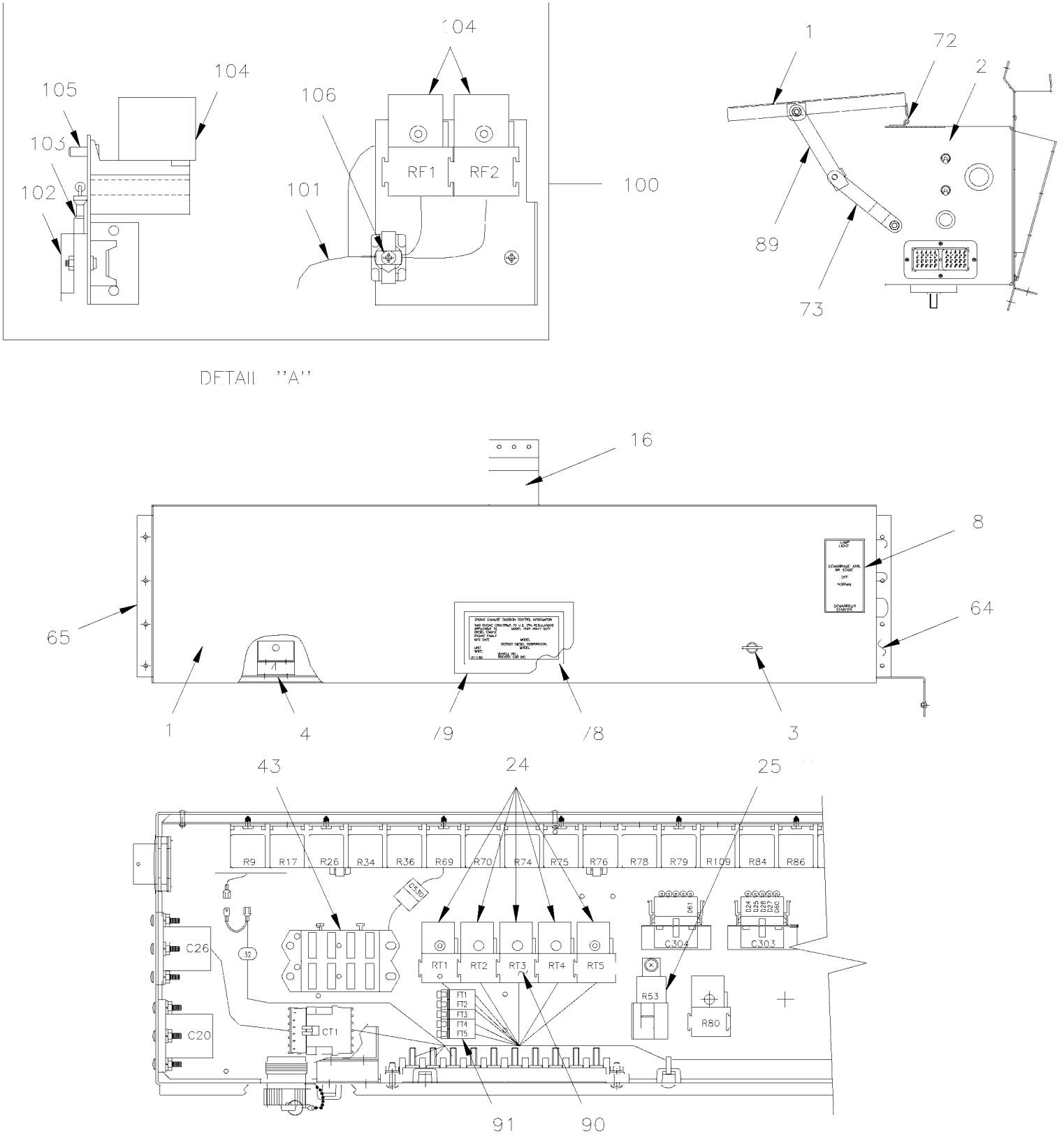

From Y-7046 To 7-9095		Date:07/2024	PAGE:Y2-0620-00

REAR JUNCTION BOX ASSY

Item#	Part	Description	XLII 45	XLII MTH40	XLII MTH45	XLII MTH45E	NOTES
1	381917	DOOR ASSY	1	1	1	1	
2	381869	BOX ASSY W/O DOOR & COMPONENTS	1	1	1	1	
3	504276	SCREW FST WI #17 12.3x22.3 STL	2	2	2	2	
4	380649	BRACKET / DOOR LOCK	2	2	2	2	
. NS	504275	. MOUNTING, FASTENER SIDE MOUNT # 17 SCREW NUT	1	1	1	1	
. NS	380619	. SUPPORT "Z" SHAPE	1	1	1	1	
. NS	504104	. RIVET POP DOME OE 1/8x1/8 SS	2	2	2	2	
6	064994	CABLE ASSY / FUEL PUMP ELECTRIC	1	1	1	1	
8	381915	DECAL / LAMP..NORMAL..START..	1	1	1	1	
9	500765	NUT HEX #10-32 BR	AR	AR	AR	AR	
10	065181	CABLE ASSY / ECU & REAR JCT BOX To 3-8164	1				
10	065789	CABLE ASSY / ECU & REAR JCT BOX From 4-8165 To 4-8358	1				
10	065977	CABLE ASSY / ECU & REAR JCT BOX From 5-8359	1				
10	064886	CABLE ASSY / ACCESSORY BATTERY To 1-7461		1	1	1	
10	065421	CABLE ASSY / ACCESSORY BATTERY From 1-7462 To 3-8164		1	1	1	
10	065790	CABLE ASSY / ACCESSORY BATTERY From 4-8165 To 4-8358		1	1	1	
10	065976	CABLE ASSY / ENGINE ACCESSORIES From 5-8359 To 5-8425		1	1	1	
10	066200	CABLE ASSY / ENGINE ACCESSORIES From 5-8426 To 7-9000		1	1	1	
10	066848	CABLE ASSY / ENGINE ACCESSORIES From 7-9001		1	1	1	
10	063297	CABLE ASSY # 102-2/0 To 2-7890		1	1	1	A B
10	065701	CABLE ASSY #102 From 2-7891		1	1	1	A C
11	061962	RESISTOR ASSY 470 OHMS 1/2W	1	1			
11	560805	. RESISTOR / 470 OHMS / 1/2W	1	1			
11	561539	. TAB RECEPTACLE TERMINAL INSUL. NYLON / 16 / AMP 3-520141-2	1	1			
12	063643	WIRE ASSY	1	1	1	1	
13	500786	NUT HEX #10-24 Z050	6	6	6	6	
14	500470	WASHER LO SPT .193x.334x.047 Z050	AR	AR	AR	AR	
15	500386	SCREW MA RND PH #10-24x1/2 Z050	6	6	6	6	
16	381954	SUPPORT CENTER	1				
16	381505	SUPPORT, CENTRAL			1		
16	381686	SUPPORT, CENTRAL		1		1	
16	382026	SUPPORT, CENTRAL From 4-8165	1	1	1	1	
17	504059	GROMMET / 1.250x1.500x.094x.375x1.875	1	1	1	1	
19	561102	BLOCK, JUNCTION / 2 STUD 3/8-16 / BLACK	3	3	3	3	
20	500622	NUT PUSH RND 5/16	2	2	2	2	
21	504013	TIE MOUNT / 1/4" X 1/4" I.D.	7	7	7	7	
22	502637	WASHER FL .200x.437x.037 SS	7	7	7	7	
23	561707	RELAY 24V S.P.D.T. W/RESISTOR / To 5-8577	AR	AR	AR	AR	
23	563332	RELAY 24V S.P.D.T. W/RESISTOR / "VOLVO" (20374662) From 5-8578 To 7-9094	AR	AR	AR	AR	W
23	561707	RELAY 24V S.P.D.T. W/RESISTOR / From 5-8578	AR	AR	AR	AR	
24	562092	RELAY 12V S.P.D.T. W/DIODE / To 5-8577	AR	AR	AR	AR	
24	563337	RELAY 12V S.P.D.T. W/RESISTOR / From 5-8578	AR	AR	AR	AR	

From Y-7046 To 7-9095		Date:07/2024	PAGE:Y2-0620-00

REAR JUNCTION BOX ASSY

Item#	Part	Description	XLII 45	XLII MTH40	XLII MTH45	XLII MTH45E	NOTES
25	561991	RELAY 24V S.P.S.T. / 70 AMPS N.O.	1	1	1	1	
26	500582	SCREW TP PAN PH #8x3/8 Z050	AR	AR	AR	AR	
27	561790	BREAKER 6AMPS / 24V /	AR	AR	AR	AR	
27	561791	BREAKER 8AMPS / 24V /	AR	AR	AR	AR	
27	561792	BREAKER 10AMPS / 24V /	AR	AR	AR	AR	
27	561793	BREAKER 15AMPS / 24V /	AR	AR	AR	AR	
27	561794	BREAKER 20AMPS / 24V /	AR	AR	AR	AR	
27	561795	BREAKER 25AMPS / 24V /	AR	AR	AR	AR	
27	561796	BREAKER 30AMPS / 24V /	AR	AR	AR	AR	
27	561797	BREAKER 3AMPS / 24V /	AR	AR	AR	AR	
28	381761	CABLE SUPPORT	1				
29	562602	FUSE / ATO 7.5 AMPS BROWN	AR				
29	562604	FUSE / ATO 15 AMPS BLUE	2				
29	562407	FUSE / ATO 10 AMPS RED	4				
30	560256	SWITCH / OFF-ON / S.P.S.T.	1	1	1	1	
31	560241	RUBBER PROTECTOR, TOGGLE SWITCH	2	2	2	2	
32	560330	SWITCH / ON-OFF-ON / D.P.D.T.	1	1	1	1	
33	560267	SWITCH, PUSH BUTTON S.P.S.T. / N.O.	1	1	1	1	
. NS	561891	. CAP RUBBER	1	1	1	1	
37	**Y2-0616-00**	**JUNCTION BOX COMPONENTS, RELAY & BREAKER**					
39	381874	BOARD, MOUNTING / LAMINATED	1	1	1	1	
42	562173	JUNCTION BLOCK W/10 STUDS	1	1	1	1	
43	562797	FUSE BLOCK W/4 LEDS & WIRES	2				
. NS	381960	. PROTECTOR COVER FUSE HOLDER 49MM x 62MM "OPTION SPECIAL"	AR				
48	500641	SCREW TP PAN PH #8x3/4 Z050	1				
49	064099	DECAL "PRIME PUMP" / ENGLISH	1				
49	066049	DECAL "PRIME PUMP" / ENGLISH & SPANISH	1				
50	381518	SUPPORT / FOR 10 PINS CONNECTOR	2				
50	381518	SUPPORT / FOR 10 PINS CONNECTOR		1	1	1	
51	561005	SWITCH MAGNETIC / 24V S.P.S.T. / 200AMPS N.O.		1	1	1	
52	065140	CABLE ASSY / FOR MAJOR COMPONENTS To 1-7524	1				
52	065447	CABLE ASSY / FOR MAJOR COMPONENTS From 1-7525 To 1-7686	1				
52	064827	CABLE ASSY / FOR MAJOR COMPONENTS To 1-7531		1	1	1	
52	065452	CABLE ASSY / FOR MAJOR COMPONENTS From 1-7532 To 2-7843		1	1	1	
52	065666	CABLE ASSY / FOR MAJOR COMPONENTS From 2-7844 To 4-8251		1	1	1	
52	065947	CABLE ASSY / FOR MAJOR COMPONENTS From 4-8252 To 4-8358		1	1	1	
52	065974	CABLE ASSY / FOR MAJOR COMPONENTS From 5-8359 To 5-8644		1	1	1	
52	066349	CABLE ASSY / FOR MAJOR COMPONENTS From 5-8645 To 7-9000		1	1	1	
52	066847	CABLE ASSY / FOR MAJOR COMPONENTS From 7-9001		1	1	1	
52	065533	CABLE ASSY / FOR MAJOR COMPONENTS From 1-7687 To 2-7764	1				
52	065570	CABLE ASSY / FOR MAJOR COMPONENTS From 2-7765 To 2-7823	1				
52	065599	CABLE ASSY / FOR MAJOR COMPONENTS From 2-7824 To 4-8244	1				

From Y-7046 To 7-9095		Date:07/2024	PAGE:Y2-0620-00

REAR JUNCTION BOX ASSY

Item#	Part	Description	XLII 45	XLII MTH40	XLII MTH45	XLII MTH45E	NOTES
52	065935	CABLE ASSY / FOR MAJOR COMPONENTS From 4-8245 To 4-8358	1				
52	065978	CABLE ASSY / FOR MAJOR COMPONENTS From 5-8359 To 5-8644	1				
52	066441	CABLE ASSY / FOR MAJOR COMPONENTS From 5-8645 To 6-8758	1				
52	066566	CABLE ASSY / FOR MAJOR COMPONENTS From 6-8759	1				
52	066589	CABLE ASSY / FOR MAJOR COMPONENTS / O.C.2004089 From 6-8606	1				
54	562360	CONNECTOR / HD10 SERIES / PH 6C / BLACK / DEUTSCH HD10-6-12P-BLACK	1	1	1	1	
55	500379	NUT HEX 3/8-16 BR	3	3	3	3	
56	500478	WASHER LO SPT .380x.683x.094 Z050	3	3	3	3	
57	**Y2-0665-10**	**SWITCHES, LIGHTS, AJAR - UNDER FLOOR**					
59	381145	DIODE ASSY / W/5 3AMPS	2				
59	381145	DIODE ASSY / W/5 3AMPS		1	1	1	
59	560931	. DIODE / 3AMPS		5	5	5	
59	561986	. CONNECTOR / UNIVERSAL MATE-N-LOK / SH 15C / AMP 1-480710-0		1	1	1	
59	561514	. SOCKET TERMINAL / 20-14 / AMP 350537-3		10	10	10	
64	381566	SUPPORT / R.H.	2				
64	381503	SUPPORT / R.H.		1	1	1	
65	381504	SUPPORT / L.H.		1	1	1	
66	500873	SCREW MA RND PH #8-32x3/4 SS BK	14	14	14	14	
67	500764	NUT HEX #8-32 Z050	14	14	14	14	
68	500518	SCREW MA BDG PH #4-40x1/2 Z050	4	4	4	4	
72	381737	HINGE	3	3	3	3	
73	063459	ARM, STRAIGHT SECTION / DOOR RETAINING	1	1	1	1	
73	500010	SCREW CAP HEX 1/4-28x1 G5 PT ZP	1	1	1	1	
73	500440	WASHER FL .250x.562x.065 Z050	2	2	2	2	
73	500473	WASHER LO SPT .262x.489x.062 Z050	1	1	1	1	
73	500162	SCREW CAP HEX 1/4-20x1/2 G5 Z050	2	2	2	2	
73	500770	NUT HEX STO 1/4-20 Z050	2	2	2	2	
78	011166	DECAL / V.I.N.	1	1	1	1	
79	681277	PROTECTOR TAPE / C.T.L.	AR	AR	AR	AR	
84	504637	CABLE TIE / 3/16" x 13"	7	7	7	7	
85	060798	DIODE ASSY		1	1	1	
87	561821	NUT, RING #17 & 20 / 1.500" I.D W/4 4-40	1	1	1	1	
89	064051	ARM, W/OFFSET SECTION / DOOR RETAINING	1	1	1	1	
90	065812	CABLE ASSY / W/TRAILER	1				D
91	562602	FUSE / ATO 7.5 AMPS BROWN	5	5	5	5	
NS	065187	DECAL / REAR JCT BOX COMPONENTS To 1-7524	1				
NS	065453	DECAL / REAR JCT BOX COMPONENTS From 1-7525 To 2-7764	1				
NS	065574	DECAL / REAR JCT BOX COMPONENTS From 2-7765 To 2-7823	1				
NS	065601	DECAL / REAR JCT BOX COMPONENTS From 2-7824 To 4-8270	1				
NS	065946	DECAL / REAR JCT BOX COMPONENTS From 4-8271	1				
NS	064912	DECAL / REAR JCT BOX COMPONENTS To 1-7531		1	1	1	
NS	065454	DECAL / REAR JCT BOX COMPONENTS From 1-7532 To 4-8251		1	1	1	

From Y-7046 To 7-9095		Date:07/2024	PAGE:Y2-0620-00

REAR JUNCTION BOX ASSY

Item#	Part	Description	XLII 45	XLII MTH40	XLII MTH45	XLII MTH45E	NOTES
NS	065948	DECAL / REAR JCT BOX COMPONENTS From 4-8252		1	1	1	
NS	064206	FAN CLUTCH, MODULE ASSY	1	1	1	1	
100	064207	. SUPPORT	1	1	1	1	
101	064209	. CABLE ASSY	1	1	1	1	
102	560772	. TIME DELAY RELAY	1	1	1	1	
103	064208	. RESISTOR ASSY 75K OHMS / 1/4 W	1	1	1	1	
104	561707	. RELAY 24V S.P.D.T. W/RESISTOR / To 5-8577	2	2	2	2	
104	563332	. RELAY 24V S.P.D.T. W/RESISTOR / "VOLVO" (20374662) From 5-8578	2	2	2	2	
105	500883	. SCREW TC PAN PH #8-32x3/8 Z050	2	2	2	2	
106	504013	. TIE MOUNT / 1/4" X 1/4" I.D.	1	1	1	1	
106	500378	. SCREW MA RND SLT #5-40x3/4 ZP	2	2	2	2	
106	502630	. WASHER FL .156x.375x.049 Z050	1	1	1	1	
106	500766	. NUT HEX #5-40 ZP	2	2	2	2	
106	504273	. CABLE TIE / 1/8" X 3"1/2	1	1	1	1	
106	502691	. WASHER LO SPT 3.6x6.7x0.8 Z050	2	2	2	2	
110	066757	KIT, LAVATORY FAN POWER W/"ZF" TRANS From 3-7962 To 5-8682	1	1	1	1	
. NS	WB06-03	. SEE WARRANTY BULLETIN From 3-7962 To 5-8682					
		A) WITH ALTERNATOR 24VOLTS 270 AMPS					
		B) FOR PRODUCT IMPROVMENT ASK FOR KIT #065696					
		C) THOSE PARTS ARE INCLUDE IN KIT #065696					
		D) USE WITHOUT RETARDER & WITHOUT A/C IN PARCEL RACK					
		W) SEE WB-0608 WARRANTY BULLETIN					

From 7-9096 To 8-9339		Date:07/2024	PAGE:Y2-0620-05
REAR JUNCTION BOX FAN - INSTALLATION			

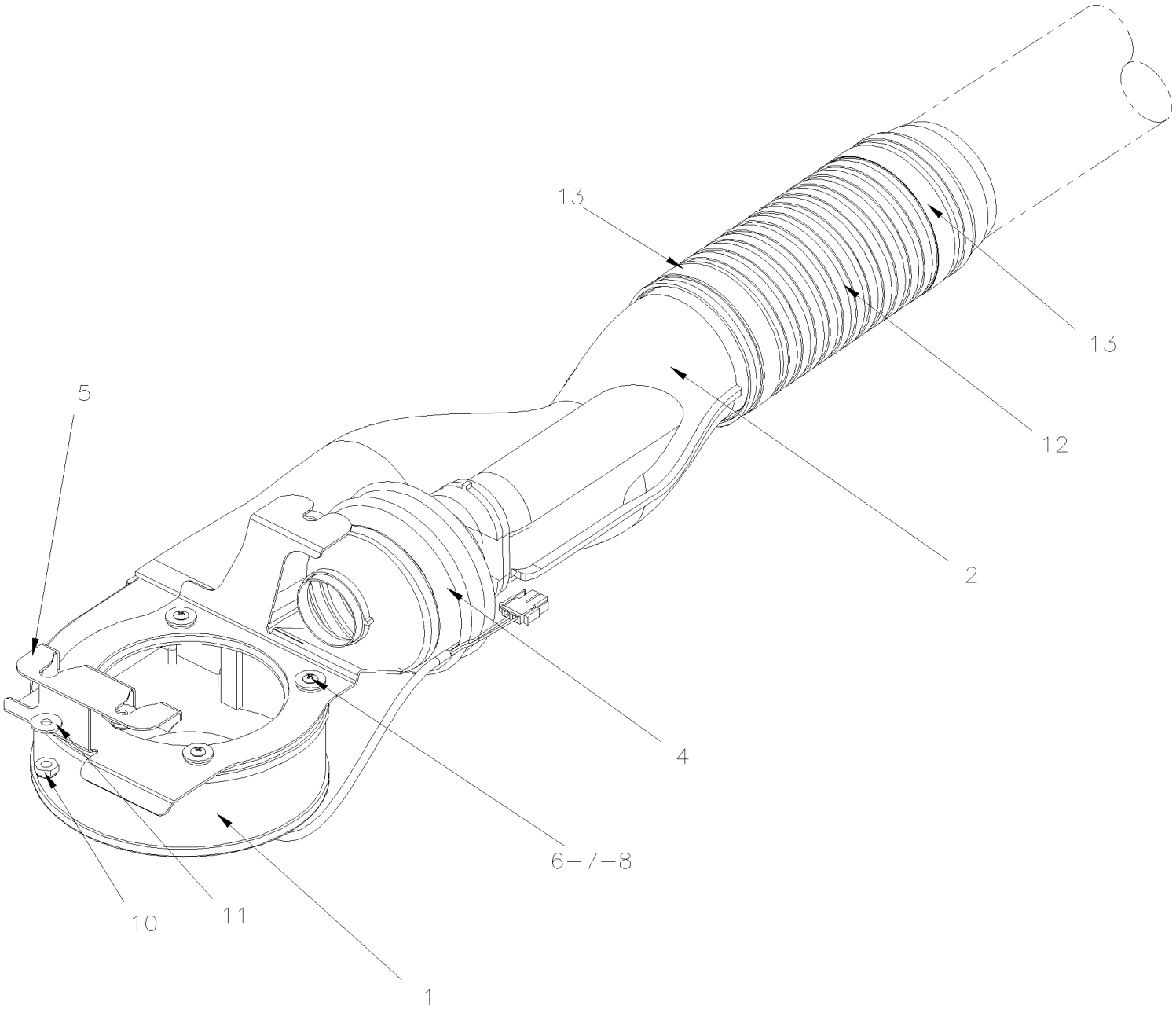

From 7-9096 To 8-9339		Date:07/2024	PAGE:Y2-0620-05

REAR JUNCTION BOX FAN - INSTALLATION

Item#	Part	Description	XLII 45	XLII MTH40	XLII MTH45	XLII MTH45E	NOTES
	Call order desk	FAN ASSY / REAR JUNCTION BOX, W/MUX			1	1	P
1	454539	. FAN ASSY 24V W/CONNECTOR			1	1	
2	950438	. ADAPTOR "Y" FAN & CABLE TUBE			1	1	
3	504024	. HOSE CLAMP / 1"13/16"-2"3/4 SS / HS-36			1	1	
4	504533	. CUFF END BELLOW / 2 3/8" I.D. x 2 3/8" x 4"			1	1	
5	454521	. SUPPORT			1	1	
6	500642	. SCREW TP PAN PH #10x3/4 Z050			8	8	
7	5001462	. WASHER FL 6.4x18.0x1.6 Z050			4	4	
8	500950	. WASHER FL .187x.625x.094 RUB			8	8	
10	502716	NUT HEX NYRT 1/4-20			4	4	
11	5001462	WASHER FL 6.4x18.0x1.6 Z050			4	4	
12	454522	HOSE FLEXIBLE 3 1/2 I.D X 200MM			1	1	
NS	503746	. HOSE FLEXIBLE / AIR DUCT 3 1/2" I.D. X 12`/ PLASTIC			AR	AR	
13	504026	HOSE CLAMP / 2"13/16-3"3/4 SS / HS-52			2	2	
		P) CALL ORDER DESK FOR SPECIFIC APPLICATION (V.I.N.)					

From 7-9096 To 8-9339		Date:07/2024	PAGE:Y2-0620-50
REAR JUNCTION BOX ASSY - MTH WITH MUX (D380244)			

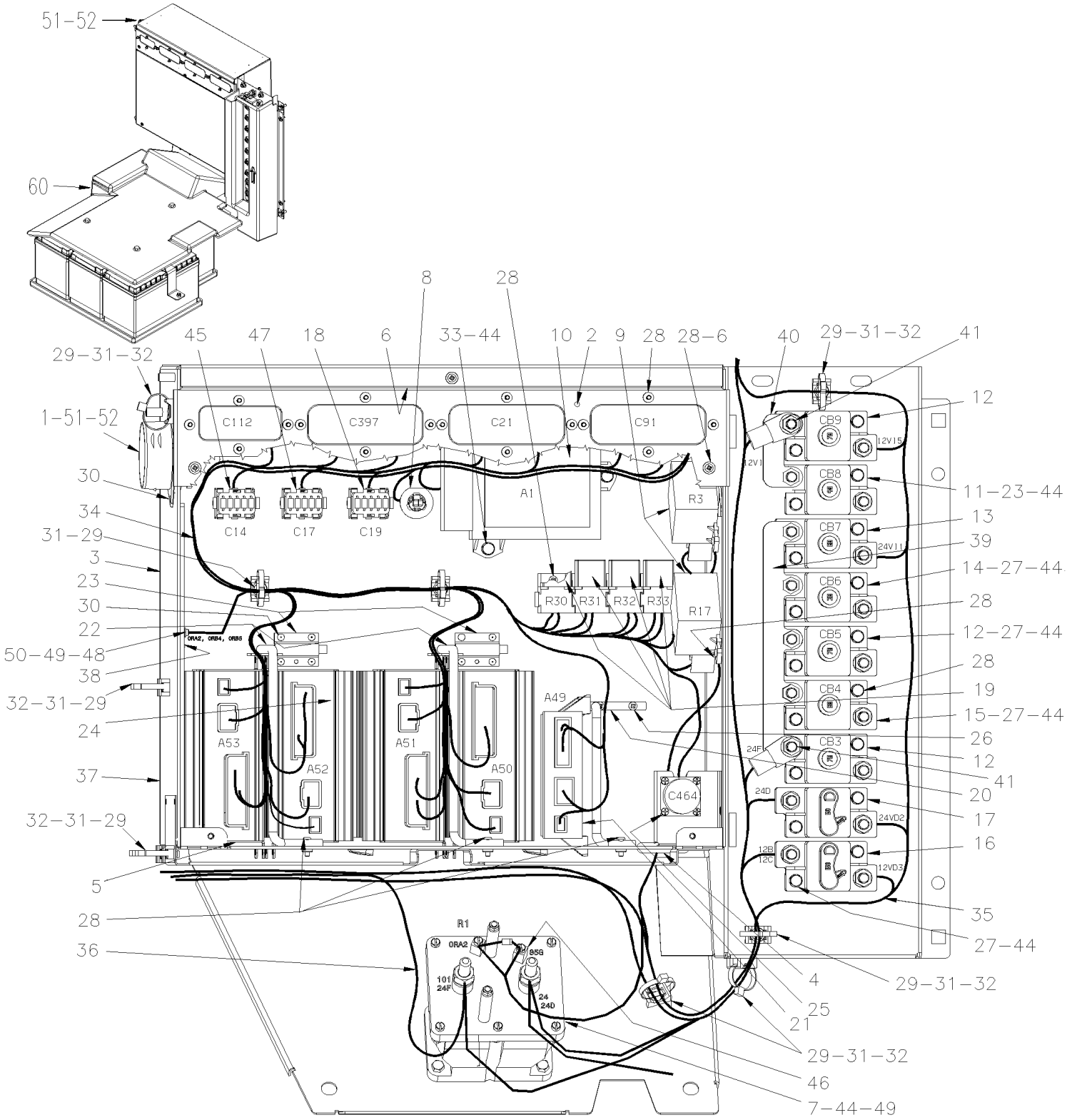

From 7-9096 To 8-9339		Date:07/2024	PAGE:Y2-0620-50

REAR JUNCTION BOX ASSY - MTH WITH MUX (D380244)

Item#	Part	Description	XLII 45	XLII MTH40	XLII MTH45	XLII MTH45E	NOTES
1	329119	HOSE ADAPTOR 2 1/2" O.D.			1	1	
2	382199	CONECTOR PANEL SUPPORT			1	1	
NS	382226	COVER REAR JCT BOX			1	1	
3	382203	BOX ASSY			1	1	
4	502681	NUT HEX NYRT M6-1.0 N500 G8			3	3	
5	5060074	TAPE RUB ADH1 URE 3/8" X 2" X 30' / GREY 1820			AR	AR	
6	504357	WASHER FL .187x.437x.050 SS			3	3	
7	562364	RELAY 24V S.P.S.T. / 300 AMPS N.O. / / BATTERY DISCONNECT			1	1	
8	563335	SENSOR THERMISTOR ASSY / OUTSIDE / / PED 15416387			1	1	
9	563348	RELAY POWER 24V 200 AMPS / S.P.S.T. N.O.			2	2	
. NS	5001182	. NUT HEX NYRT M6-1.0 SS			1	1	
. NS	502573	. WASHER FL 6.4x12.5x1.6 SS			1	1	
. NS	563409	. CONNECTOR / SUPERSEAL 1.5 SERIES / SH 2C / AMP 282080-1			1	1	
. NS	562607	. SOCKET TERMINAL / 20-16 / AMP 183025-1			1	1	
10	572037	E.C.U. HD4060R / GEN IV To 7-9146			1		
10	572045	E.C.U. HD4000MG / GEN IV To 7-9143			1		
10	572028	E.C.U. B500 / GEN IV To 7-9146				1	
10	572044	E.C.U. B500 / GEN IV From 7-9144				1	
11	563705	BREAKER 40AMPS / 24V /			1	1	
12	563707	BREAKER 70AMPS / 24V /			1	1	
13	563706	BREAKER 60AMPS / 24V /			1	1	
14	563704	BREAKER 35AMPS / 24V /			1	1	
15	563708	BREAKER 90AMPS / 24V /			1	1	
16	563709	BREAKER 150AMPS / 24V /			1	1	
17	563710	BREAKER 50AMPS / 24V /			1	1	
18	381145	DIODE ASSY / W/5 3AMPS			1	1	
19	563332	RELAY 24V S.P.D.T. W/RESISTOR / "VOLVO" (20374662)			4	4	
20	382179	ROD ATTACHMENT / I/O A MODULE			1	1	
21	563272	I/O A-MODULE VOLVO MULTIPLEX / BLACK To 7-9116			1	1	
. NS	562767	. CONNECTOR / SH 30C / GREEN / JAE IL-AG5-30S-D3C1 To 7-9116			1	1	
. NS	562957	. CONNECTOR / SH 5C / GREEN / JAE IL-AG5-5S-S3C1 To 7-9116			1	1	
. NS	563132	. CONNECTOR / SH 2C / YAZAKI 7283-6458-40 To 7-9116			1	1	
21	565864	I/O A-MODULE VOLVO MULTIPLEX / BLACK From 7-9117			1	1	
. NS	562767	. CONNECTOR / SH 30C / GREEN / JAE IL-AG5-30S-D3C1 From 7-9117			1	1	
. NS	562957	. CONNECTOR / SH 5C / GREEN / JAE IL-AG5-5S-S3C1 From 7-9117			1	1	
. NS	563132	. CONNECTOR / SH 2C / YAZAKI 7283-6458-40 From 7-9117			1	1	
22	382166	ROD ATTACHMENT / I/O B MODULE			2	2	
23	382169	HINGE ROD ATTACHMENT			2	2	
24	563273	I/O B-MODULE VOLVO MULTIPLEX / ALUMINUM To 7-9116			4	4	
. NS	563132	. CONNECTOR / SH 2C / YAZAKI 7283-6458-40 To 7-9116			1	1	
. NS	563133	. CONNECTOR / JUNIOR POWER TIMER / SH 29C / AMP 1-963449-2 To 7-9116			1	1	
. NS	562957	. CONNECTOR / SH 5C / GREEN / JAE IL-AG5-5S-S3C1 To 7-9116			1	1	

From 7-9096 To 8-9339		Date:07/2024	PAGE:Y2-0620-50

REAR JUNCTION BOX ASSY - MTH WITH MUX (D380244)

Item#	Part	Description	XLII 45	XLII MTH40	XLII MTH45	XLII MTH45E	NOTES
24	565865	I/O B-MODULE VOLVO MULTIPLEX / ALUMINUM From 7-9117			4	4	
. NS	563132	. CONNECTOR / SH 2C / YAZAKI 7283-6458-40 From 7-9117			1	1	
. NS	563133	. CONNECTOR / JUNIOR POWER TIMER / SH 29C / AMP 1-963449-2 From 7-9117			1	1	
. NS	562957	. CONNECTOR / SH 5C / GREEN / JAE IL-AG5-5S-S3C1 From 7-9117			1	1	
25	500601	SCREW TC PAN PH #6-32x3/8 N500			4	4	
26	500965	SCREW TC BDG PH #8-32x1/2 N500			2	2	
27	502622	SCREW CAP HEX M6-1.0x20 SS BK			22	22	
28	502698	SCREW MA PAN PH M4-0.7x16 SS BK			30	30	
29	504013	TIE MOUNT / 1/4" X 1/4" I.D.			10	10	
30	504340	RIVET POP DOME OE 1/8x3/16 SS			12	12	
31	504379	RIVET POP DOME OE 3/16x1/4 SS			10	10	
32	504637	CABLE TIE / 3/16" x 13"			AR	AR	
33	955269	SCREW CAP HEX M6-1.0x12 G8.8 ZG603			3	3	
34	066785	CABLE HARNESS / REAR JUNCTION BOX			1	1	
35	066786	CABLE POWER / BREAKERS & HVAC			1	1	
36	066833	CABLE STARTER W/MUX			1	1	
37	066918	INSULATED PAD			1	1	
38	066938	INSULATED PAD			1	1	
39	382211	BUS BAR 5 HOLES			1	1	
40	382212	BUS BAR 2 HOLES			1	1	
41	5001522	NUT HEXF LO 3/8-16 SS			2	2	
44	502570	WASHER LO SPT 6.1x11.8x1.6 SS			21	21	
45	382175	DIODE ASSY / W/3 3AMPS & 2 RESISTORS 100 OHMS			1	1	
46	064792	DIODE ASSY			1	1	
. NS	561740	. DIODE / 3AMPS			1	1	
. NS	560082	. RING TERMINAL #10 / 16-14 / INSULATED / AMP 626033-2			1	1	
. NS	560815	. RING TERMINAL #10 / 22-18 / INSULATED / AMP 42037-2			1	1	
. NS	562499	. SHRINK TUBING / .250" - .125" / CLEAR / ALPHA FIT 221-1/4			AR	AR	
47	382097	DIODE ASSY / W/3 3AMPS & 2 RESISTORS 270 OHMS			1	1	
48	502681	NUT HEX NYRT M6-1.0 N500 G8			1	1	
49	500877	WASHER FL .250x.562x.065 N500			1	1	
50	5001182	NUT HEX NYRT M6-1.0 SS			4	4	
51	503031	HOSE FLEXIBLE / AIR DUCT 2 1/2" I.D. X 12`/ RUBBER			AR	AR	
NS	5060085	PIPE INSULATING / 2 5/8" I.D. X 1/2" TH. X 72			AR	AR	
52	504023	HOSE CLAMP / 1"5/16-2"1/4 SS / HS-28			1	1	
60	**Y2-0615-51**	**BATTERIES INSTALLATION - MTH WITH / MUX**	1	1	1	1	

From Y-7046 To 7-9095		Date:07/2024	PAGE:Y2-0621-00
A/C JUNCTION BOX ASSY			

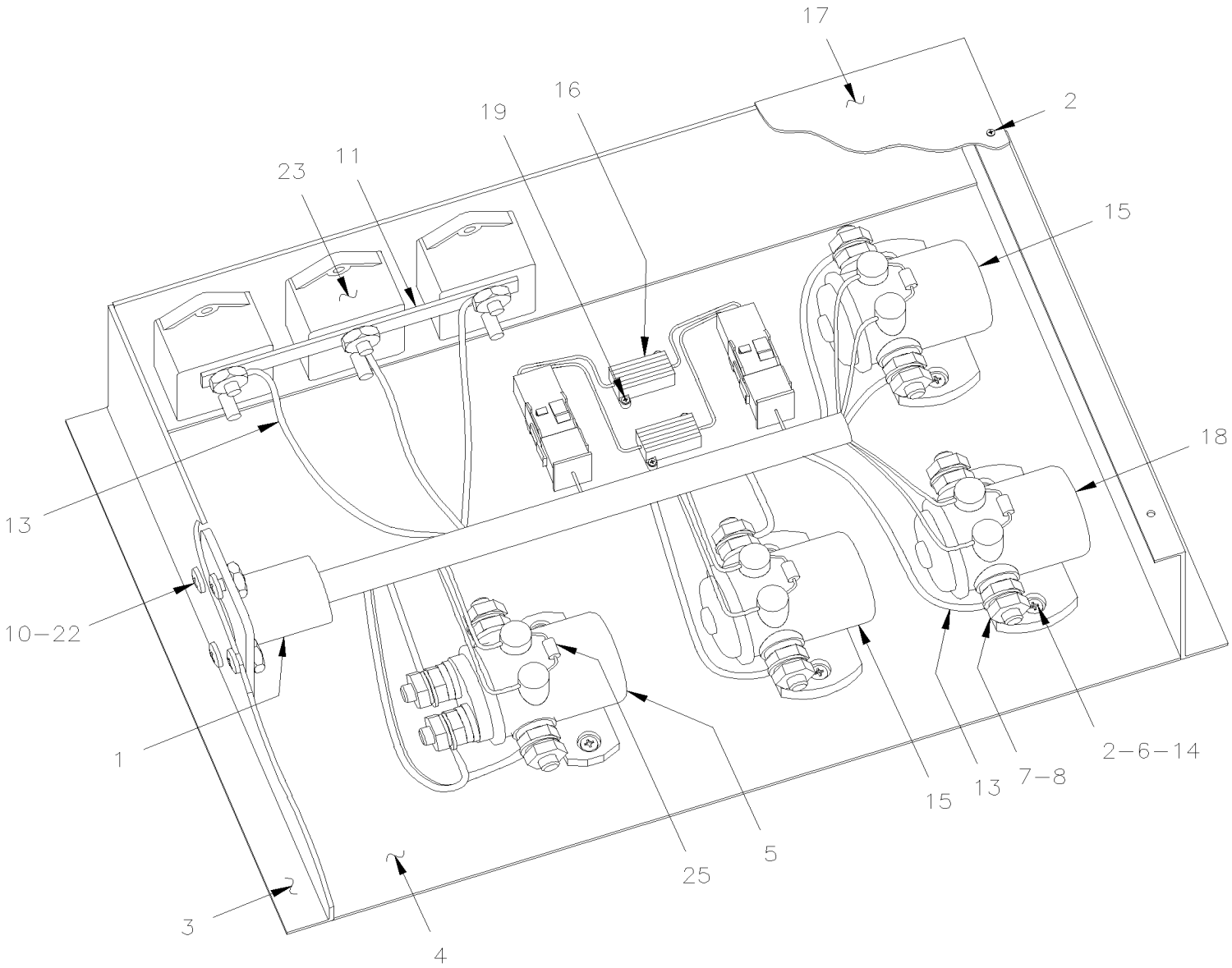

UP TO 3–8101

From Y-7046 To 7-9095		Date:07/2024	PAGE:Y2-0621-00
A/C JUNCTION BOX ASSY			

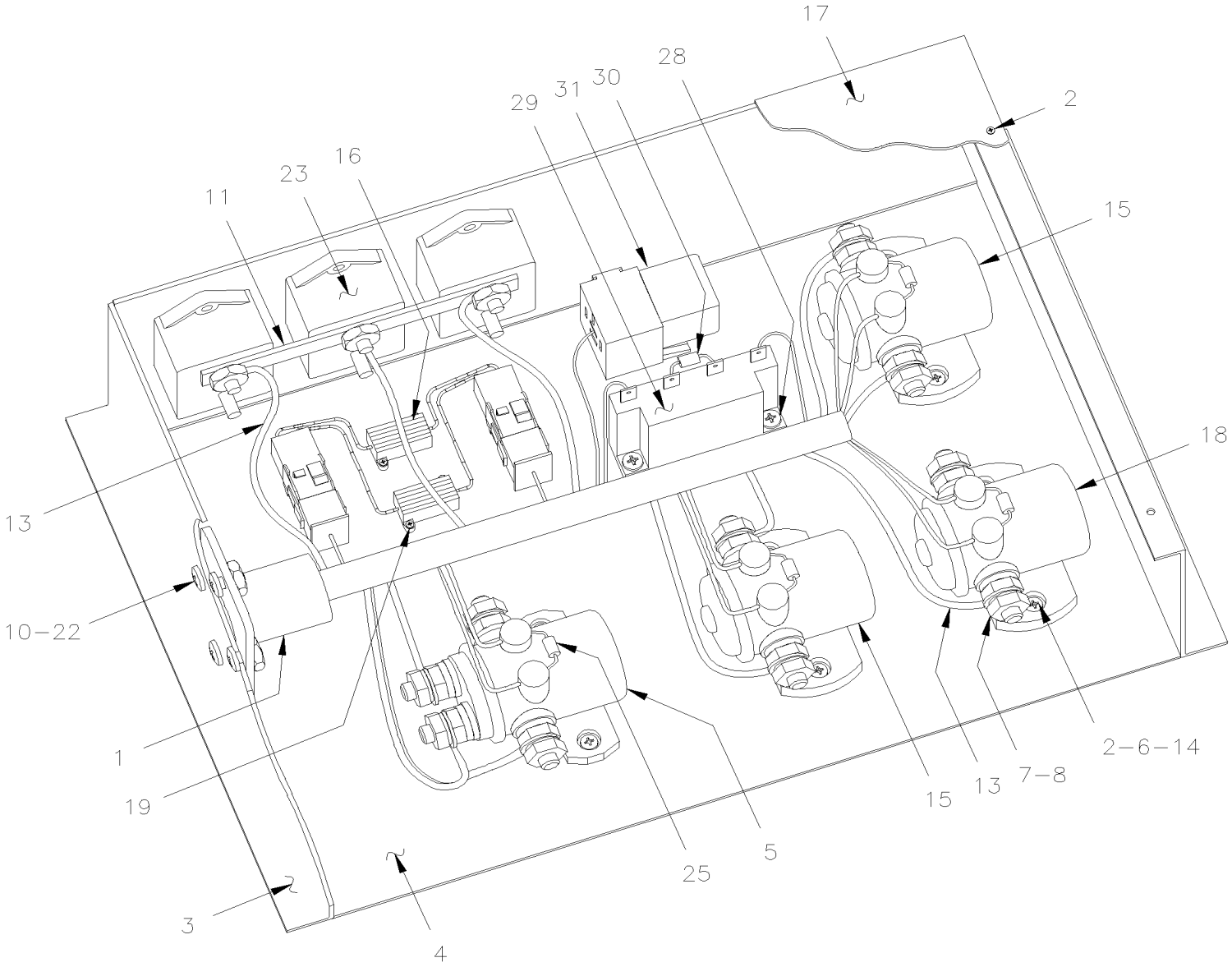

FROM 3–8102

From Y-7046 To 7-9095		Date:07/2024	PAGE:Y2-0621-00

A/C JUNCTION BOX ASSY

Item#	Part	Description	XLII 45	XLII MTH40	XLII MTH45	XLII MTH45E	NOTES
	382029	A/C JUNCTION BOX ASSY / W/RELAY To 3-8101	1	1	1	1	
	Call order desk	A/C JUNCTION BOX ASSY / W/RELAY From 3-8102	1				P
	382040P	A/C JUNCTION BOX ASSY / W/RELAY /SAV From 3-8102 To 6-8805		1	1	1	
	Call order desk	A/C JUNCTION BOX ASSY / W/RELAY From 6-8806		1	1	1	P D
1	065057	. CABLE ASSY / A/C JCT BOX To 3-8101	1	1	1	1	
1	065768	. CABLE ASSY / A/C JCT BOX From 3-8102	1	1	1	1	
2	500632	. SCREW TP OV PH #8x1 1/2 Z050	2				
2	500638	. SCREW TP PAN PH #8x1/2 Z050	8	8	8	8	
3	381919	. A/C FRAME BOX	1	1	1	1	
3	381919	. A/C FRAME BOX To 6-8805		1	1	1	
3	382140	. A/C FRAME BOX From 6-8806		1	1	1	D
4	381921	. BOX BOTTOM	1				
5	561014	. SWITCH MAGNETIC / 24V D.P.S.T. / 200AMPS N.O.	1	1	1	1	
6	500438	. WASHER FL .187x.437x.050 Z050	2				
6	500438	. WASHER FL .187x.437x.050 Z050	12	12	12	12	
7	500699	. NUT HEX 5/16-24 Z050	8	8	8	8	
8	500476	. WASHER LO SPT .317x.586x.078 Z050	8	8	8	8	
9	502677	. SCREW MA RND PH M4-0.7x25 SS	6	6	6	6	
10	500590	. NUT HEX NYRT M4-0.7 Z050	10	10	10	10	
11	381047	. BUS BAR / W/3 HOLES / 60MM C/C	1	1	1	1	
12	562688	. BREAKER 120AMPS / 24V /	1	1	1	1	
13	065133	. CABLE ASSY #130A	1				
14	500470	. WASHER LO SPT .193x.334x.047 Z050	2				
14	500470	. WASHER LO SPT .193x.334x.047 Z050	6	6	6	6	
15	561005	. SWITCH MAGNETIC / 24V S.P.S.T. / 200AMPS N.O.	2	2	2	2	
16	064907	. RESISTOR ASSY	1	1	1	1	
17	381920	. BOX COVER	1	1	1	1	
NS	065058	. DECAL A/C JCT BOX	1	1	1	1	
18	561005	. SWITCH MAGNETIC / 24V S.P.S.T. / 200AMPS N.O.	1				
19	500798	. SCREW TP PAN PH #4-3/8 ZP	4	4	4	4	
20	504068	. GROMMET / .500x.750x.062x.312x1.062	1	1	1	1	
21	504264	. GROMMET / .750x1.250x.062x.250x1.625	1	1	1	1	
22	502698	. SCREW MA PAN PH M4-0.7x16 SS BK	4	4	4	4	
23	562686	. BREAKER 40AMPS / 24V /	2	2	2	2	
NS	Call order desk	. DECAL To 3-8101	1	1	1	1	P
NS	065770	. DECAL From 3-8102	1	1	1	1	
25	060798	. DIODE ASSY	3	3	3	3	
26	506071	. TAPE RUB ADH1 CC POL 1/8" x 1/2" x 50' / GREY 2520X	AR	AR	AR	AR	
28	500583	. SCREW TP PAN PH #6x1/2 Z050 From 3-8102	2	2	2	2	
29	560772	. TIME DELAY RELAY From 3-8102	1	1	1	1	
30	065755	. RESISTOR ASSY 330K/OHMS / 1/2 W From 3-8102	1				
30	065613	. RESISTOR ASSY 30K OHMS / 1/4 W From 3-8102		1	1	1	

From Y-7046 To 7-9095		Date:07/2024	PAGE:Y2-0621-00

A/C JUNCTION BOX ASSY

Item#	Part	Description	XLII 45	XLII MTH40	XLII MTH45	XLII MTH45E	NOTES
31	561707	. RELAY 24V S.P.D.T. W/RESISTOR / From 3-8102 To 5-8577	1	1	1	1	
31	563332	. RELAY 24V S.P.D.T. W/RESISTOR / "VOLVO" (20374662) From 5-8578	1	1	1	1	
		D) FIXED ON EVAPORATOR DOOR					
		P) CALL ORDER DESK FOR SPECIFIC APPLICATION (V.I.N.)					

From Y-7046 To 7-9095		Date:07/2024	PAGE:Y2-0621-10
CABLE & HARNESS EVAPO. & CONDENSOR - INST			

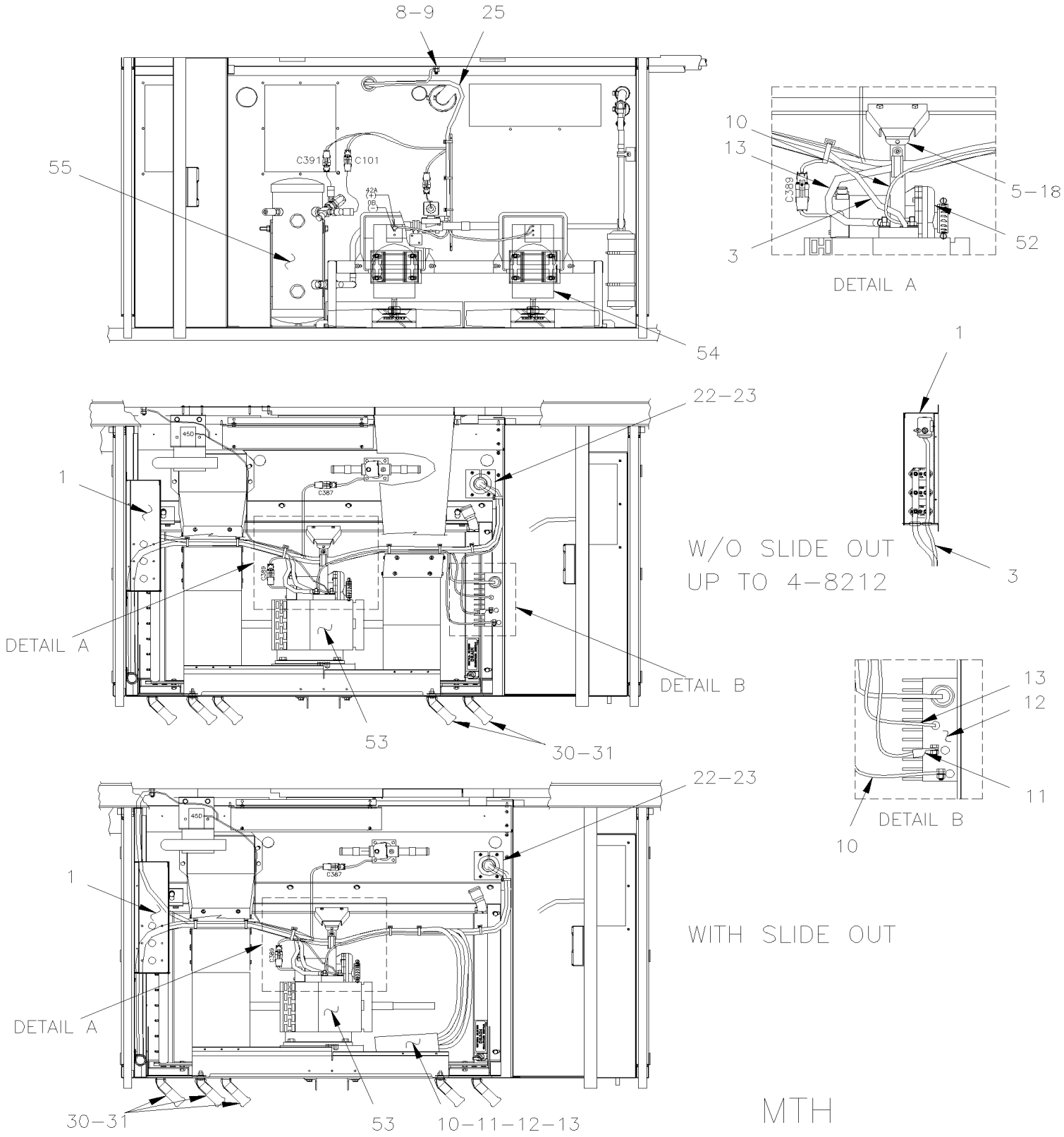

From Y-7046 To 7-9095		Date:07/2024	PAGE:Y2-0621-10
CABLE & HARNESS EVAPO. & CONDENSOR - INST			

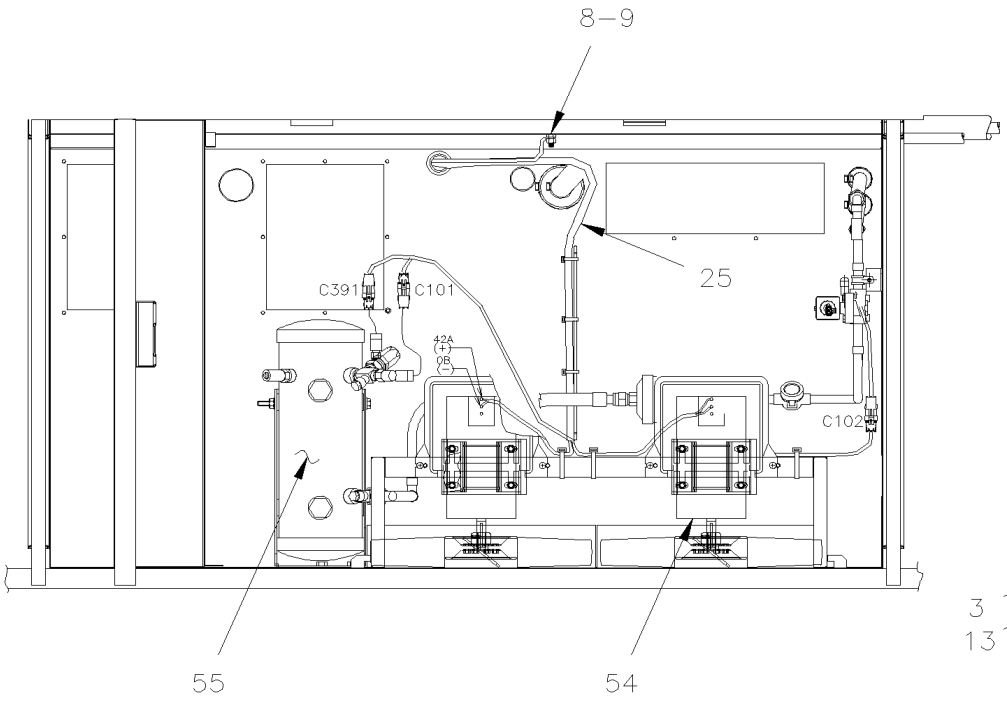

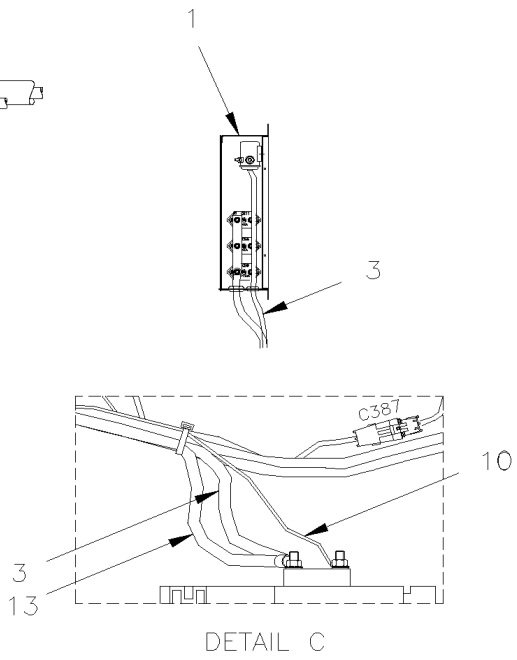

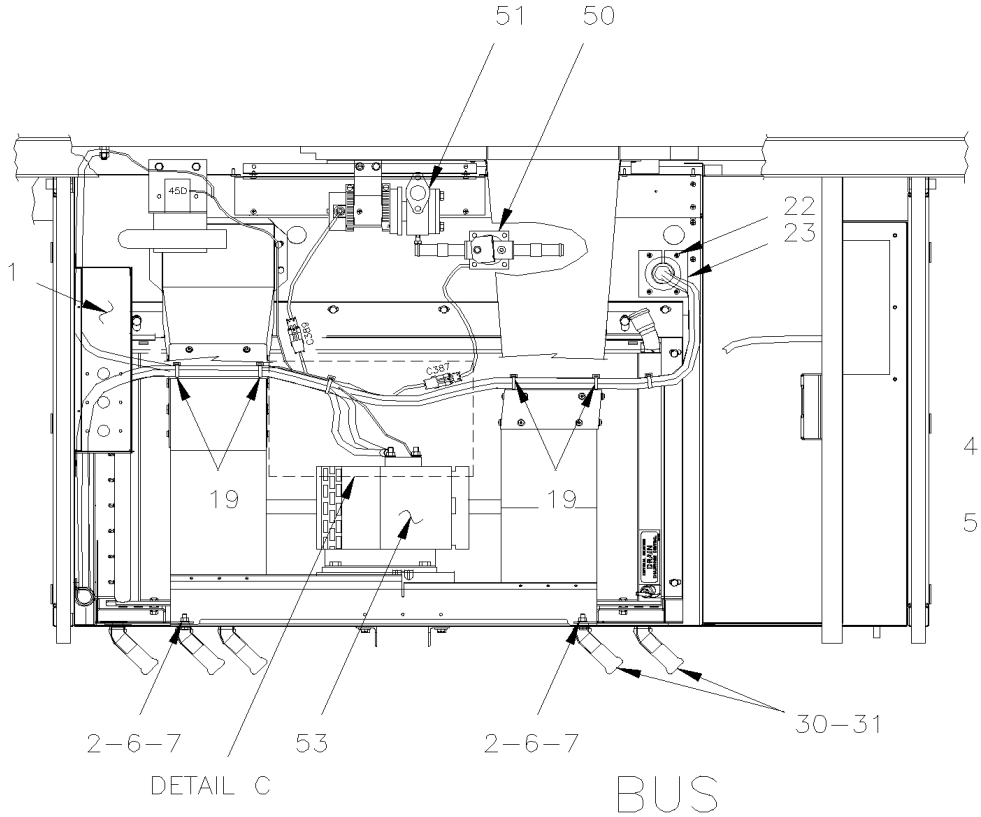

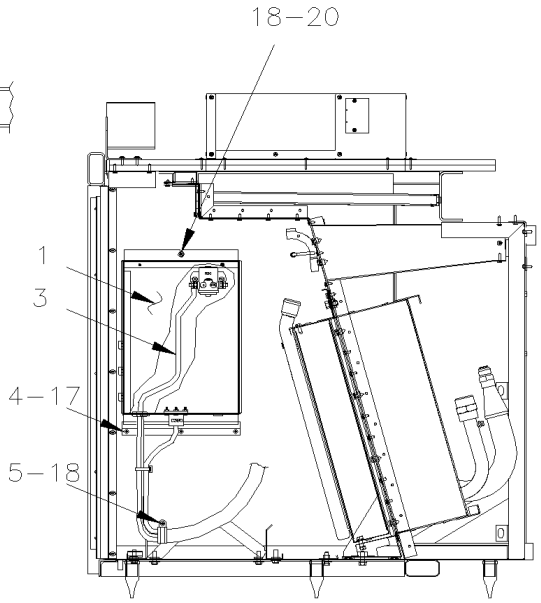

BUS

From Y-7046 To 7-9095		Date:07/2024	PAGE:Y2-0621-10

CABLE & HARNESS EVAPO. & CONDENSOR - INST

Item#	Part	Description	XLII 45	XLII MTH40	XLII MTH45	XLII MTH45E	NOTES
1	**Y2-0621-00**	**A/C JUNCTION BOX ASSY**					
3	065134	CABLE ASSY #130	1				
3	065087	CABLE ASSY #130 To 4-8212		1	1	1	
3	065134	CABLE ASSY #130 To 4-8212			1		
3	065888	CABLE ASSY / W/SLIDE-OUT / #130 From 4-8213			1		
4	381929	SUPPORT A/C BOX	1	1	1	1	
5	952641	CLAMP P STL ZP RUB 34.9 ID	1	1	1	1	
6	502909	NUT HEX 5/16-24 ZG603	2	2	2	2	
7	500476	WASHER LO SPT .317x.586x.078 Z050	2	2	2	2	
8	500379	NUT HEX 3/8-16 BR	1	1	1	1	
9	500478	WASHER LO SPT .380x.683x.094 Z050	1	1	1	1	
10	063840	CABLE / SPEED CONTROL & MOTOR #166B To 4-8212		1	1	1	
11	063625	CABLE / GROUND & SPEED CONTROL #0		1	1	1	
12	871086	CONTROL SPEED To 4-8212		1	1	1	
13	063841	CABLE / SPEED CONTROL & MOTOR #0A To 4-8212			1		
13	061073	CABLE GROUND To 4-8212			1		
14	502531	SCREW CAP HEX M6-1.0x16 G8.8 Z050 To 4-8212		3	3	3	
15	502621	NUT HEX STO M6-1.0 Z050 To 4-8212		3	3	3	
16	500446	WASHER FL .531x1.250x.125 Z050 To 4-8212		3	3	3	
17	504105	RIVET POP DOME OE 1/8x3/16 AL	3	3	3	3	
18	500946	SCREW TP BDG PH #8x1/2 N500	6	6	6	6	
19	504637	CABLE TIE / 3/16" x 13"	10	10	10	10	
20	500940	SCREW TP FL PH #10x2 Z050	1	1	1	1	
21	500535	SCREW TP CAP HEX #14x3/4 Z050	4	4	4	4	
22	500948	SCREW TC CAP HEX 1/4-20x1 Z050	4	4	4	4	
23	065179	PLATE CLOSING	1	1	1	1	
24	684013	RUBBER PROTECTOR / COLOR GUARD 14.5oz	AR	AR	AR	AR	
30	590284	DRAIN BOOT 1" I.D. X 5" / FLAT	6	6	6	6	
31	504021	HOSE CLAMP / 11/16"-1"1/2 SS / HS-16	6	6	6	6	
50	**Y2-2207-20**	**WATER VALVE - BYPASS W/WATER HEATER**					
51	**Y2-2206-00**	**WATER PUMP #871052 & #871204 To 4-8205**					
51	**Y2-2206-01**	**WATER PUMP #871342 SEALLESS From 4-8206**					
52	**Y2-2206-50**	**WATER PUMP #871032**					
53	**Y2-2265-00**	**MOTOR - EVAPORATOR - "PREVOST" - T-17**					
53	**Y2-2265-01**	**MOTOR - EVAPORATOR - "PREVOST" - T-17 - 2 SPEEDS**					
54	**Y2-2265-50**	**MOTOR - CONDENSOR - "PREVOST" - TF-12 To 2-7825**					
54	**Y2-2265-51**	**MOTOR - CONDENSOR - "PREVOST" - T11G From 2-7826**					
55	**Y2-2270-00**	**RECEIVER TANK & FILTER DRYER**					

From 7-9096 To 8-9339		Date:07/2024	PAGE:Y2-0621-50
A/C CONDENSOR MOTOR RELAY			

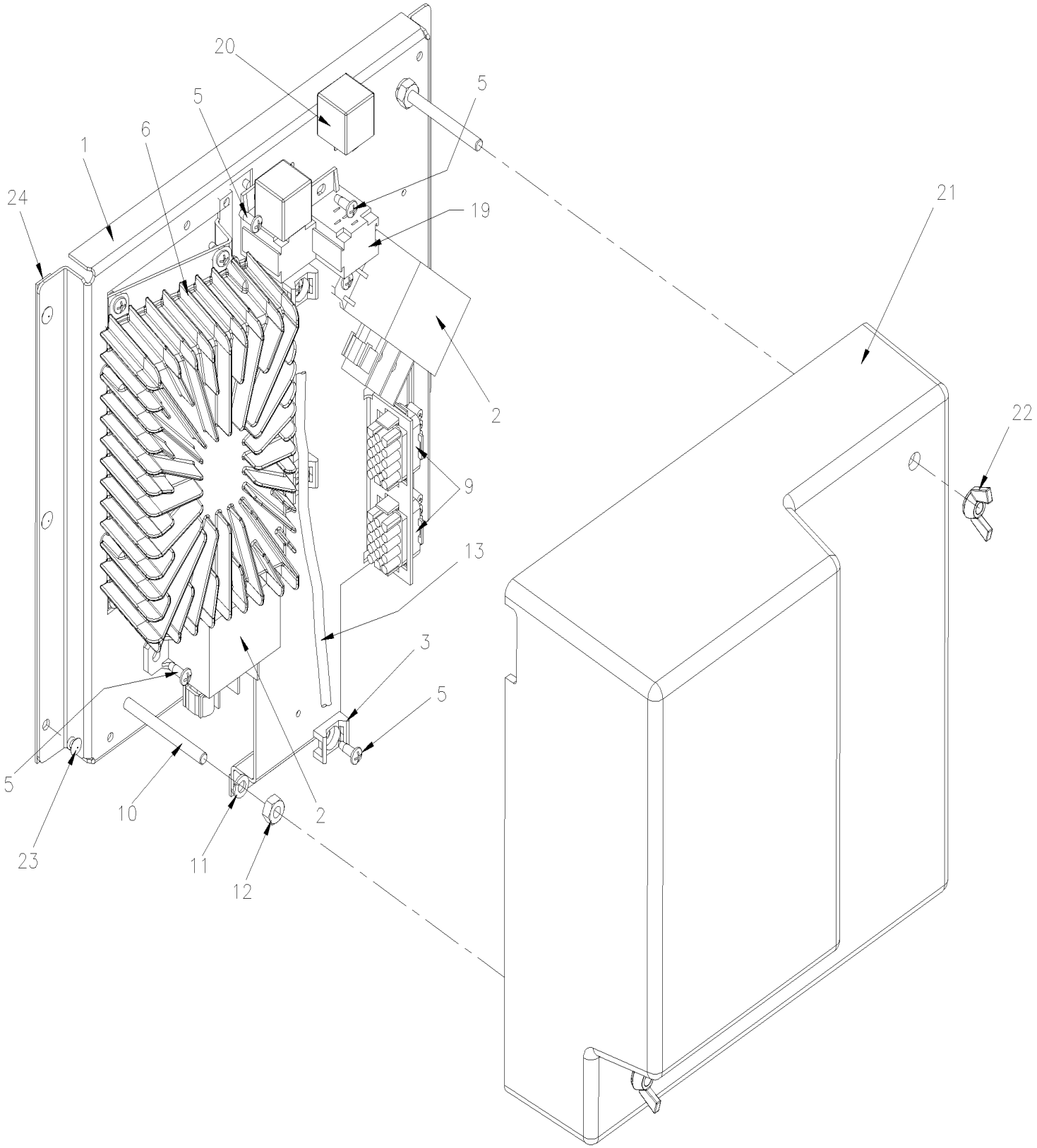

From 7-9096 To 8-9339		Date:07/2024	PAGE:Y2-0621-50

A/C CONDENSOR MOTOR RELAY

Item#	Part	Description	XLII 45	XLII MTH40	XLII MTH45	XLII MTH45E	NOTES
1	382077	PANEL MOUNTING REAR JCT BOX / MUX			1	1	
2	563348	RELAY POWER 24V 200 AMPS / S.P.S.T. N.O.			1	1	
. NS	5001182	. NUT HEX NYRT M6-1.0 SS			1	1	
. NS	502573	. WASHER FL 6.4x12.5x1.6 SS			1	1	
. NS	563409	. CONNECTOR / SUPERSEAL 1.5 SERIES / SH 2C / AMP 282080-1			1	1	
. NS	562607	. SOCKET TERMINAL / 20-16 / AMP 183025-1			1	1	
3	504013	TIE MOUNT / 1/4" X 1/4" I.D.			AR	AR	
NS	504637	CABLE TIE / 3/16" x 13"			AR	AR	
5	502868	SCREW TC TR PH #10-16x1/2 N500			AR	AR	
6	563273	I/O B-MODULE VOLVO MULTIPLEX / ALUMINUM To 7-9116			1	1	
. NS	563132	. CONNECTOR / SH 2C / YAZAKI 7283-6458-40 To 7-9116			1	1	
. NS	563133	. CONNECTOR / JUNIOR POWER TIMER / SH 29C / AMP 1-963449-2 To 7-9116			1	1	
. NS	562957	. CONNECTOR / SH 5C / GREEN / JAE IL-AG5-5S-S3C1 To 7-9116			1	1	
6	565865	I/O B-MODULE VOLVO MULTIPLEX / ALUMINUM From 7-9117			1	1	
. NS	563132	. CONNECTOR / SH 2C / YAZAKI 7283-6458-40 From 7-9117			1	1	
. NS	563133	. CONNECTOR / JUNIOR POWER TIMER / SH 29C / AMP 1-963449-2 From 7-9117			1	1	
. NS	562957	. CONNECTOR / SH 5C / GREEN / JAE IL-AG5-5S-S3C1 From 7-9117			1	1	
9	381145	DIODE ASSY / W/5 3AMPS			2	2	
10	5001593	SCREW MA RND SLT 1/4-20x2 3/4 SS			1	1	
11	500477	WASHER LO SPT .262x.489x.062 SS			1	1	
12	500771	NUT HEX 1/4-20 SS			1	1	
13	066782	CABLE ASSY / EVAPORATOR ACCESSORIES COMPARTMENT			1	1	
19	561183	RELAY BASE / TAB TERMINAL / BOSCH 3334485008			1	1	
20	563332	RELAY 24V S.P.D.T. W/RESISTOR / "VOLVO" (20374662)			2	2	
21	382078	COVER PROTECTOR			1	1	
21	066279	DECAL RELAY IDENTIFICATION EVAPORATOR CONTROL			1	1	
NS	066155	DECAL PIN OUT / JCT BOX W/MUX			1	1	
22	5001348	NUT WING 1/4-20 NYL			1	1	
23	504379	RIVET POP DOME OE 3/16x1/4 SS			7	7	
24	506236	TAPE RUB ADH1 CC POL 1/16" x 1/2" x 100' / GREY 2520			AR	AR	

From Y-7046 To 7-9095		Date:07/2024	PAGE:Y2-0625-00
FRONT JUNCTION PANEL			

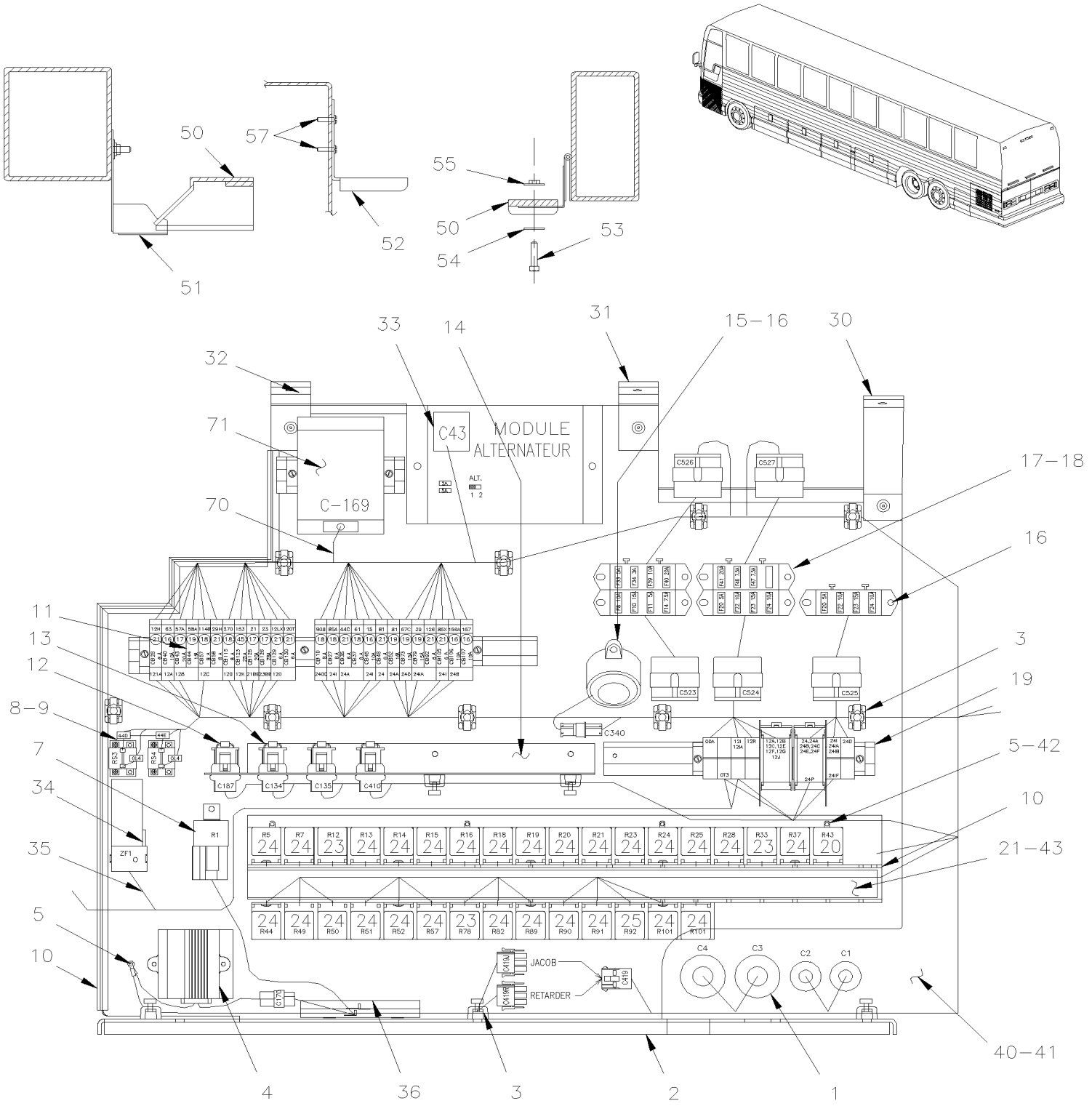

From Y-7046 To 7-9095		Date:07/2024	PAGE:Y2-0625-00
FRONT JUNCTION PANEL			

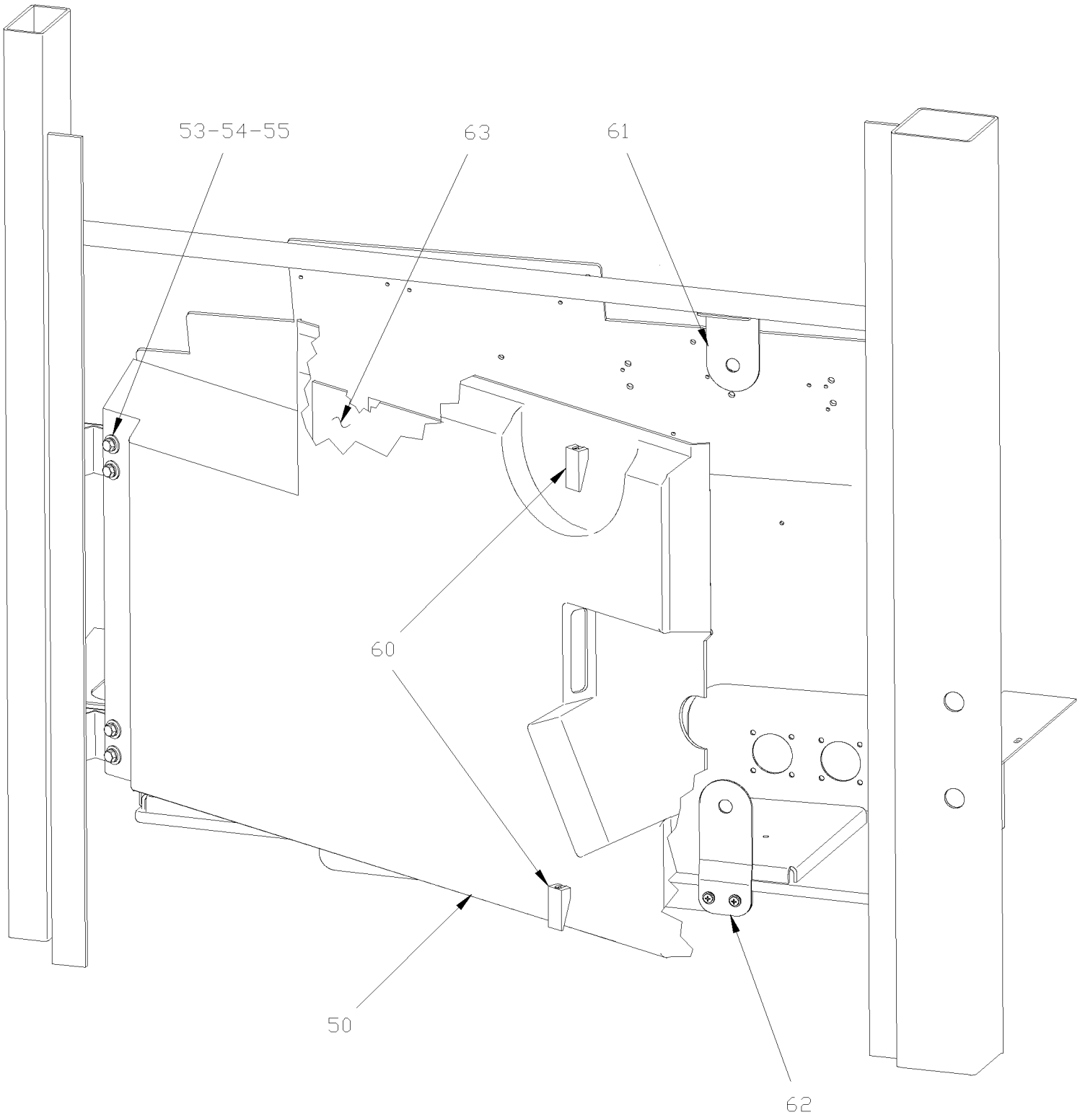

From Y-7046 To 7-9095		Date:07/2024	PAGE:Y2-0625-00

FRONT JUNCTION PANEL

Item#	Part	Description	XLII 45	XLII MTH40	XLII MTH45	XLII MTH45E	NOTES
1	065109	WIRING HARNESS FRONT JUNCTION BOX To 1-7310	1				
1	065347	WIRING HARNESS FRONT JUNCTION BOX From Y-7311 To Y-7376	1				
1	065403	WIRING HARNESS FRONT JUNCTION BOX From Y-7377 To 1-7524	1				
1	065449	WIRING HARNESS FRONT JUNCTION BOX From 1-7525 To 2-7799	1				
1	065575	WIRING HARNESS FRONT JUNCTION BOX From 2-7800 To 2-7824	1				
1	065595	WIRING HARNESS FRONT JUNCTION BOX From 2-7825 To 2-7832	1				
1	065648	WIRING HARNESS FRONT JUNCTION BOX From 2-7833 To 2-8130	1				
1	065762	WIRING HARNESS FRONT JUNCTION BOX From 3-8131 To 3-8164	1				C
1	065854	WIRING HARNESS FRONT JUNCTION BOX From 4-8165 To 4-8359	1				
1	065716	WIRING HARNESS FRONT JUNCTION BOX From 5-8359 To 5-8469	1				
1	066229	WIRING HARNESS FRONT JUNCTION BOX From 5-8470 To 5-8644	1				
1	066438	WIRING HARNESS FRONT JUNCTION BOX From 5-8645 To 6-8605	1				
1	066591	WIRING HARNESS FRONT JUNCTION BOX From 6-8606	1				
1	064815	WIRING HARNESS FRONT JUNCTION BOX To 1-7411		1	1	1	
1	065425	WIRING HARNESS FRONT JUNCTION BOX From 1-7412 To 1-7530		1	1	1	
1	065450	WIRING HARNESS FRONT JUNCTION BOX From 1-7531 To 2-7799		1	1	1	
1	065551	WIRING HARNESS FRONT JUNCTION BOX From 2-7800 To 2-7832		1	1	1	
1	065640	WIRING HARNESS FRONT JUNCTION BOX From 2-7833 To 4-8359		1	1	1	
1	065711	WIRING HARNESS FRONT JUNCTION BOX From 5-8359 To 5-8469		1	1	1	
1	066231	WIRING HARNESS FRONT JUNCTION BOX From 5-8470 To 5-8644		1	1	1	
1	066470	WIRING HARNESS FRONT JUNCTION BOX From 5-8645		1	1	1	
1	065688	WIRING HARNESS FRONT JUNCTION BOX From 2-7908 To 3-8130				1	D
1	065764	WIRING HARNESS FRONT JUNCTION BOX From 3-8131 To 4-8359				1	D
1	065713	WIRING HARNESS FRONT JUNCTION BOX From 5-8359 To 5-8469				1	D
1	066232	WIRING HARNESS FRONT JUNCTION BOX From 5-8470 To 5-8644				1	
1	066471	WIRING HARNESS FRONT JUNCTION BOX From 5-8645				1	
2	381941	FRONT PANEL BOX		1	1	1	
2	381909	FRONT PANEL BOX	1				
3	504013	TIE MOUNT / 1/4" X 1/4" I.D.	AR	AR	AR	AR	
NS	504347	RIVET POP DOME OE 3/16x1/4 AL	AR	AR	AR	AR	
NS	504637	CABLE TIE / 3/16" x 13"	AR	AR	AR	AR	
4	064421	FLASHER UNIT 12V ASSY W/CONNECTOR	4	4	4	4	
5	500638	SCREW TP PAN PH #8x1/2 Z050	AR	AR	AR	AR	
7	561991	RELAY 24V S.P.S.T. / 70 AMPS N.O.	1	1	1	1	
8	061976	RESISTOR ASSY 1 OHM 10 W	4	4	4	4	
NS	380923	INSULATOR	2	2	2	2	
NS	066001	RESISTOR ASSY 0.2 OHM 12.5 WATTS W/CONNECTOR From 5-8359	1	1	1	1	H
9	500583	SCREW TP PAN PH #6x1/2 Z050	8	8	8	8	
10	506025	RUBBER CHANNEL / 1/18" x 5/16" INT "U" SHAPE / SQUARE C.T.L.	AR	AR	AR	AR	
NS	680066	ADHESIVE / ADBOND #5014 / 23.6ML BOTTLE	AR	AR	AR	AR	
11	561790	BREAKER 6AMPS / 24V /	AR	AR	AR	AR	
11	561791	BREAKER 8AMPS / 24V /	AR	AR	AR	AR	

From Y-7046 To 7-9095		Date:07/2024	PAGE:Y2-0625-00

FRONT JUNCTION PANEL

Item#	Part	Description	XLII 45	XLII MTH40	XLII MTH45	XLII MTH45E	NOTES
11	561792	BREAKER 10AMPS / 24V /	AR	AR	AR	AR	
11	561793	BREAKER 15AMPS / 24V /	AR	AR	AR	AR	
11	561794	BREAKER 20AMPS / 24V /	AR	AR	AR	AR	
NS	381802	FRONT BOX CLIP	1	1	1	1	
NS	504106	RIVET POP DOME OE 1/8x1/4 AL	1	1	1	1	
12	063286	RESISTOR CONNECTOR ASSY (FAST IDLE)	1	1	1	1	
13	381145	DIODE ASSY / W/5 3AMPS	6	6	6	6	
14	381880	DIODE SUPPORT	1	1	1	1	
15	064094	FIRE & KNEELING / ALARM ASSY / SERVICE	1	1	1	1	
16	500641	SCREW TP PAN PH #8x3/4 Z050	14	14	14	14	
17	562797	FUSE BLOCK W/4 LEDS & WIRES To 4-8244	6	6	6	6	
. NS	381960	. PROTECTOR COVER FUSE HOLDER 49MM x 62MM "OPTION SPECIAL" To 4-8244	AR	AR	AR	AR	
17	563535	FUSE BLOCK W/4 LEDS & WIRES From 4-8245	6	6	6	6	
. NS	381960	. PROTECTOR COVER FUSE HOLDER 49MM x 62MM "OPTION SPECIAL" From 4-8245	AR	AR	AR	AR	
18	562599	FUSE / ATO 3 AMPS VIOLET	AR	AR	AR	AR	
18	562259	FUSE / ATO 5 AMPS AMBER	AR	AR	AR	AR	
18	562602	FUSE / ATO 7.5 AMPS BROWN	AR	AR	AR	AR	
18	562407	FUSE / ATO 10 AMPS RED	AR	AR	AR	AR	
18	562604	FUSE / ATO 15 AMPS BLUE	AR	AR	AR	AR	
18	562605	FUSE / ATO 20 AMPS YELLOW	AR	AR	AR	AR	
19	**Y2-0616-00**	**JUNCTION BOX COMPONENTS, RELAY & BREAKER**					
20	562622	DAYTIME RUN LTS MODULE 12V W/LOW BEAM	1	1	1	1	
21	064910	DECAL FRONT JUNCTION BOX RELAY To 2-7832		1	1	1	
21	065647	DECAL FRONT JUNCTION BOX RELAY From 2-7833		1	1	1	
21	065139	DECAL FRONT JUNCTION BOX RELAY To 2-7832	1				
21	065646	DECAL FRONT JUNCTION BOX RELAY From 2-7833 To 3-7992	1				
21	065759	DECAL FRONT JUNCTION BOX RELAY From 3-7993	1				
21	064911	DECAL FRONT JUNCTION BOX RELAY To 1-7411		1	1	1	
21	065426	DECAL FRONT JUNCTION BOX RELAY From 1-7412 To 2-7799		1	1	1	
21	065579	DECAL FRONT JUNCTION BOX RELAY From 2-7800 To 2-7832		1	1	1	
21	065643	DECAL FRONT JUNCTION BOX RELAY From 2-7833 To 3-7992		1	1	1	
21	065759	DECAL FRONT JUNCTION BOX RELAY From 3-7993 To 3-8130		1	1	1	
21	065760	DECAL FRONT JUNCTION BOX RELAY From 3-8131 To 4-8164		1	1	1	
21	065901	DECAL FRONT JUNCTION BOX RELAY From 4-8165 To 5-8358		1	1	1	
21	065714	DECAL FRONT JUNCTION BOX RELAY From 5-8359 To 5-8469		1	1	1	
21	066233	DECAL FRONT JUNCTION BOX RELAY From 5-8470		1	1	1	
23	562092	RELAY 12V S.P.D.T. W/DIODE / To 5-8577	3	3	3	3	
23	563337	RELAY 12V S.P.D.T. W/RESISTOR / From 5-8578	3	3	3	3	
24	561707	RELAY 24V S.P.D.T. W/RESISTOR / To 5-8577	AR	AR	AR	AR	
24	563332	RELAY 24V S.P.D.T. W/RESISTOR / "VOLVO" (20374662) From 5-8578	AR	AR	AR	AR	
25	561538	RELAY 12V S.P.D.T. V 415 F11	1	1	1	1	
30	381912	ATTACHMENT BACKWARD	1	1	1	1	

From Y-7046 To 7-9095		Date:07/2024	PAGE:Y2-0625-00

FRONT JUNCTION PANEL

Item#	Part	Description	XLII 45	XLII MTH40	XLII MTH45	XLII MTH45E	NOTES
31	381911	ATTACHMENT CENTER	1	1	1	1	
32	381914	ATTACHMENT FORWARD	1	1	1	1	
33	562947	CONTROL MODULE BOX / W / 2 "BOSCH" ALTERNATOR	1			1	
34	563033	E.C.U. / W/STEERING ASSIST (STP 272 or 330) ((77//125))	1	1	1	1	
34	563465	E.C.U. / W/STEERING ASSIST W/"ZF" TRANS ONLY (STP 146)	1	1	1	1	
35	064908	CABLE ASSY TO STEERING SPEED SIGNAL ECU / W/"ZF" STEERING	1	1	1	1	
36	064505	SPARE FUSE BOX	1	1	1	1	
40	381999	SUPPORT HARNESS & FRONT PANEL BOX To 4-8269	1				
40	382043	SUPPORT HARNESS & FRONT PANEL BOX From 4-8270	1				
40	381988	SUPPORT HARNESS & FRONT PANEL BOX To 4-8274		1	1	1	
40	382042	SUPPORT HARNESS & FRONT PANEL BOX From 4-8275		1	1	1	
41	064428	DECAL CONNECTOR / C1,C2,C3,C4	1	1	1	1	
42	286228	PROTECTOR RELAY	1	1	1	1	
43	381779	RELAY SUPPORT	1	1	1	1	
50	286967	PROTECTOR FRONT ELECTRIC COMPARTMENT	1	1	1	1	
51	287019	LATCH UPPER To Y-7299	1	1	1	1	
51	289230	LATCH UPPER From Y-7300 To 2-7820	1	1	1	1	
52	287088	LATCH LOWER To 2-7820	1	1	1	1	
53	502531	SCREW CAP HEX M6-1.0x16 G8.8 Z050	4	4	4	4	
54	500411	WASHER FL .260x.697x.050 SS	10	10	10	10	
NS	502570	WASHER LO SPT 6.1x11.8x1.6 SS	6	6	6	6	
55	287210	ATTACHMENT PLATE W/NUT	2	2	2	2	
57	500641	SCREW TP PAN PH #8x3/4 Z050	2	2	2	2	
NS	065389	CABLE ASSY / "JACOB`S" & RETARDER	1	1	1	1	A
NS	561707	RELAY 24V S.P.D.T. W/RESISTOR / To 5-8577	1	1	1	1	A
59	563332	RELAY 24V S.P.D.T. W/RESISTOR / "VOLVO" (20374662) From 5-8578	1	1	1	1	A
60	901052	LATCH RUBBER From 2-7821	2	2	2	2	
61	384286	RETAINER UPPER From 2-7821	1	1	1	1	
62	384287	RETAINER LOWER From 2-7821	1	1	1	1	
63	065375	DECAL "FRT JCT BOX" COMPONENTS To 2-7799	1				
63	065580	DECAL "FRT JCT BOX" COMPONENTS From 2-7800 To 2-7823	1				
63	065649	DECAL "FRT JCT BOX" COMPONENTS From 2-7824 To 3-7992	1				
63	065758	DECAL "FRT JCT BOX" COMPONENTS From 3-7993 To 3-8130	1				
63	065756	DECAL "FRT JCT BOX" COMPONENTS From 3-8131 To 4-8164	1				
63	065856	DECAL "FRT JCT BOX" COMPONENTS From 4-8165 To 5-8358	1				
63	065717	DECAL "FRT JCT BOX" COMPONENTS From 5-8359 To 5-8469	1				
63	066230	DECAL "FRT JCT BOX" COMPONENTS From 5-8470	1				
70	065407	CABLE ASSY / SPEED SWITCH W/ "EATON" TRANS	1				B
71	381250	SWITCH, PROGRAMMABLE SPEED	1				B

From Y-7046 To 7-9095		Date:07/2024	PAGE:Y2-0625-00

FRONT JUNCTION PANEL

Item#	Part	Description	XLII 45	XLII MTH40	XLII MTH45	XLII MTH45E	NOTES
		A) VEHICLE EQUIPPED WITH DUAL OPTION "JACOB" & RETARDER					
		B) WITH "EATON" TRANSMISSION ONLY					
		C) WITH UPPER DEFROSTER					
		D) WITH TWIN ALTERNATOR "BOSCH"					
		H) USE ONLY WITH "HALOGENE" LAMP					

From 7-9096 To 8-9339		Date:07/2024	PAGE:Y2-0625-01
FRONT JUNCTION PANEL / MUX			

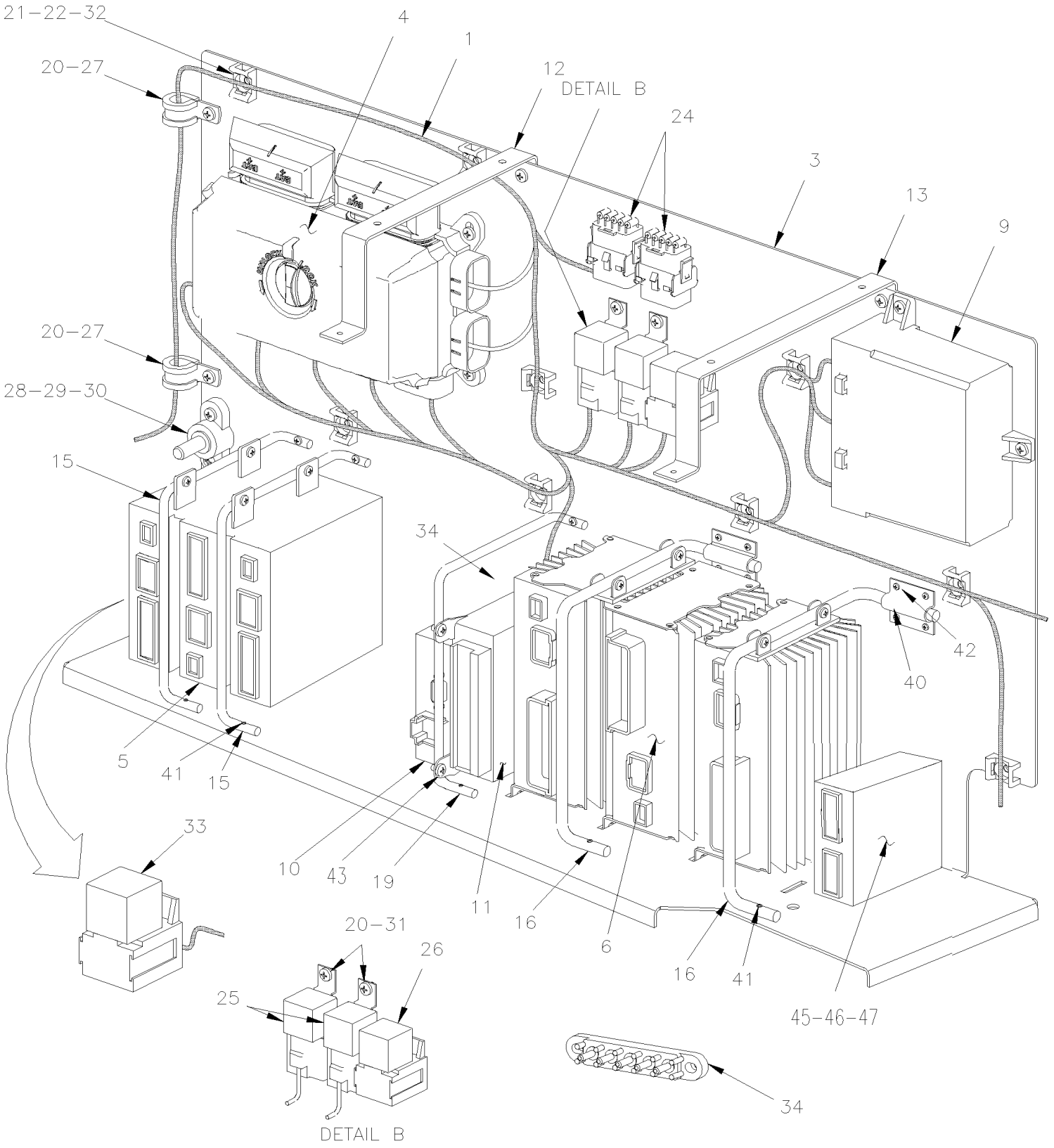

From 7-9096 To 8-9339		Date:07/2024	PAGE:Y2-0625-01
FRONT JUNCTION PANEL / MUX			

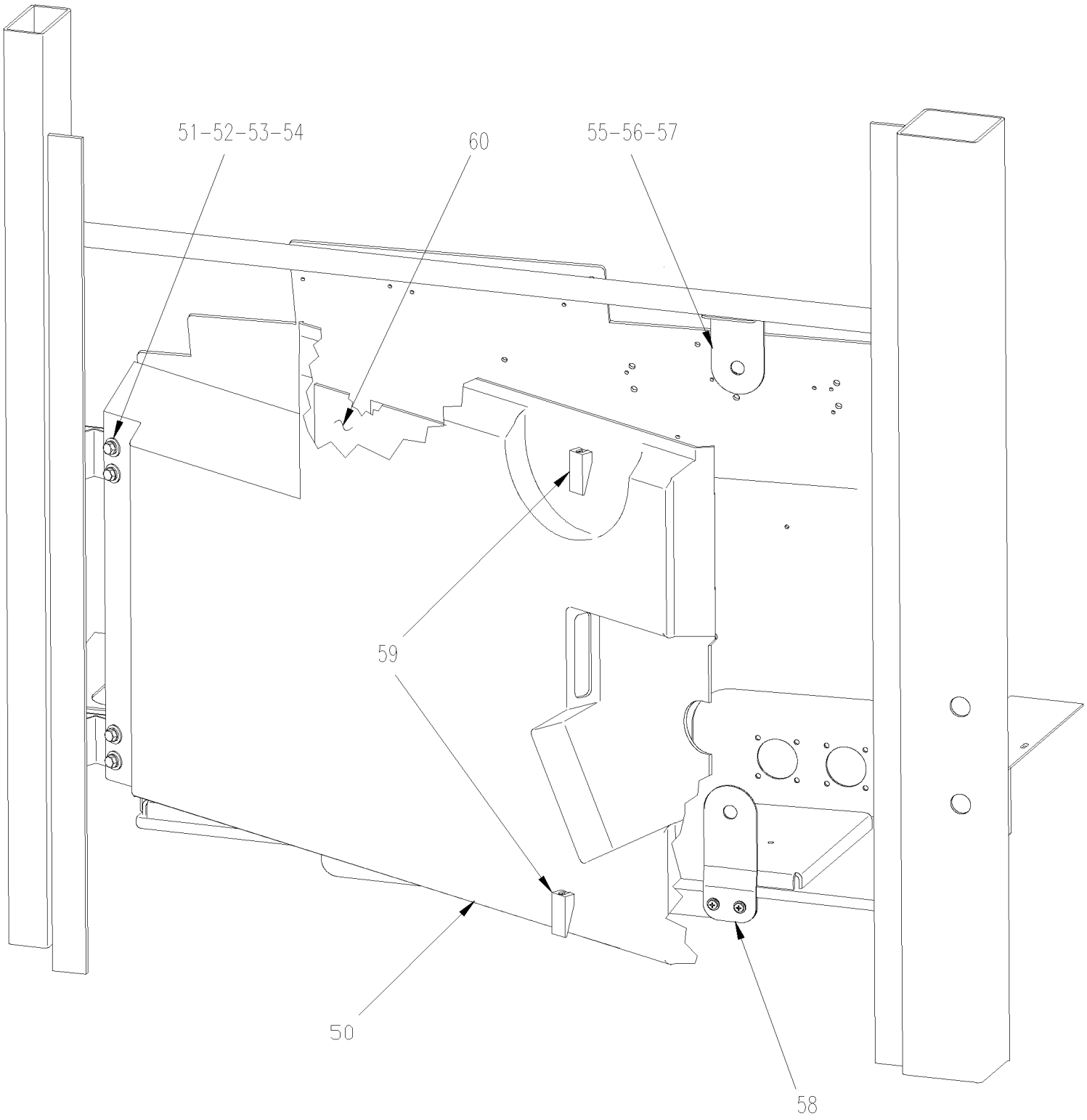

From 7-9096 To 8-9339		Date:07/2024	PAGE:Y2-0625-01

FRONT JUNCTION PANEL / MUX

Item#	Part	Description	XLII 45	XLII MTH40	XLII MTH45	XLII MTH45E	NOTES
1	066775	WIRING HARNESS FRONT JUNCTION BOX / W/MUX			1	1	
3	382160	FRONT PANEL BOX To 8-9278			1	1	
3	382374	FRONT PANEL BOX From 8-9279			1	1	
4	563361	VEC DISTRIBUTION MODULE / FRONT JCT BOX To 7-9116			1	1	P
. NS	564104	. COVER / VEC BOX To 7-9116			1	1	P
. NS	563269	. RELAY 24V S.P.D.T. W/RESISTOR / To 7-9116			1	1	P
. NS	563004	. FUSE / ATM 2 AMPS GREY To 7-9116			1	1	P
. NS	563279	. FUSE / ATM 3 AMPS VIOLET To 7-9116			14	14	P
. NS	563280	. FUSE / ATM 5 AMPS AMBER To 7-9116			2	2	P
. NS	563005	. FUSE / ATM 7.5 AMPS BROWN To 7-9116			5	5	P
. NS	563283	. FUSE / ATM 10 AMPS RED To 7-9116			6	6	P
. NS	563284	. FUSE / ATM 15 AMPS BLUE To 7-9116			4	4	P
. NS	563282	. FUSE / ATM 20 AMPS YELLOW To 7-9116			7	7	P
. NS	563153	. FUSE / ATM 25 AMPS NATURAL To 7-9116			2	2	P
. NS	563165	. FUSE / ATM 30 AMPS GREEN To 7-9116			3	3	P
. NS	564464	. MINI BREAKER / 20 AMPS / SERIES 223 To 7-9116			1	1	P
. NS	563181	. CONNECTOR / SH 8C / YELLOW / BUSSMANN 32006-E21 To 7-9116			1	1	P
. NS	563182	. CONNECTOR / SH 8C / ORANGE / BUSSMANN 32006-G21 To 7-9116			1	1	P
. NS	563183	. CONNECTOR / SH 8C / RED / BUSSMANN 32006-F21 To 7-9116			1	1	P
. NS	563184	. CONNECTOR / SH 8C / GREEN / BUSSMANN 32006-C21 To 7-9116			1	1	P
. NS	563185	. CONNECTOR / SH 8C / BLACK / BUSSMANN 32006-A21 To 7-9116			1	1	P
. NS	563186	. CONNECTOR / SH 8C / GREY / BUSSMANN 32006-B21 To 7-9116			1	1	P
. NS	563187	. CONNECTOR / SH 8C / BROWN / BUSSMANN 32006-H21 To 7-9116			1	1	P
. NS	563448	. CONNECTOR / SH 8C / BLUE / BUSSMANN 32006-D21 To 7-9116			1	1	P
. NS	19518268	. COVER RUBBER RED To 7-9116			2	2	P
4	563674	VEC DISTRIBUTION MODULE / FRONT JCT BOX SERVICE From 7-9117			1	1	
. NS	564104	. COVER / VEC BOX From 7-9117			1	1	
. NS	563004	. FUSE / ATM 2 AMPS GREY From 7-9117			1	1	
. NS	563279	. FUSE / ATM 3 AMPS VIOLET From 7-9117			14	14	
. NS	563280	. FUSE / ATM 5 AMPS AMBER From 7-9117			2	2	
. NS	563005	. FUSE / ATM 7.5 AMPS BROWN From 7-9117			3	3	
. NS	563283	. FUSE / ATM 10 AMPS RED From 7-9117			6	6	
. NS	563284	. FUSE / ATM 15 AMPS BLUE From 7-9117			9	9	
. NS	563282	. FUSE / ATM 20 AMPS YELLOW From 7-9117			6	6	
. NS	563153	. FUSE / ATM 25 AMPS NATURAL From 7-9117			1	1	
. NS	563165	. FUSE / ATM 30 AMPS GREEN From 7-9117			3	3	
. NS	564464	. MINI BREAKER / 20 AMPS / SERIES 223 From 7-9117			1	1	
. NS	563181	. CONNECTOR / SH 8C / YELLOW / BUSSMANN 32006-E21 From 7-9117			1	1	
. NS	563182	. CONNECTOR / SH 8C / ORANGE / BUSSMANN 32006-G21 From 7-9117			1	1	
. NS	563183	. CONNECTOR / SH 8C / RED / BUSSMANN 32006-F21 From 7-9117			1	1	
. NS	563184	. CONNECTOR / SH 8C / GREEN / BUSSMANN 32006-C21 From 7-9117			1	1	
. NS	563185	. CONNECTOR / SH 8C / BLACK / BUSSMANN 32006-A21 From 7-9117			1	1	

From 7-9096 To 8-9339		Date:07/2024	PAGE:Y2-0625-01

FRONT JUNCTION PANEL / MUX

Item#	Part	Description	XLII 45	XLII MTH40	XLII MTH45	XLII MTH45E	NOTES
. NS	563186	. CONNECTOR / SH 8C / GREY / BUSSMANN 32006-B21 From 7-9117			1	1	
. NS	563187	. CONNECTOR / SH 8C / BROWN / BUSSMANN 32006-H21 From 7-9117			1	1	
. NS	563448	. CONNECTOR / SH 8C / BLUE / BUSSMANN 32006-D21 From 7-9117			1	1	
. NS	19518268	. COVER RUBBER RED From 7-9117			2	2	
5	563272	I/O A-MODULE VOLVO MULTIPLEX / BLACK To 7-9116			3	3	
. NS	562767	. CONNECTOR / SH 30C / GREEN / JAE IL-AG5-30S-D3C1 To 7-9116			1	1	
. NS	562957	. CONNECTOR / SH 5C / GREEN / JAE IL-AG5-5S-S3C1 To 7-9116			1	1	
. NS	563132	. CONNECTOR / SH 2C / YAZAKI 7283-6458-40 To 7-9116			1	1	
5	565864	I/O A-MODULE VOLVO MULTIPLEX / BLACK From 7-9117			3	3	
. NS	562767	. CONNECTOR / SH 30C / GREEN / JAE IL-AG5-30S-D3C1 From 7-9117			1	1	
. NS	562957	. CONNECTOR / SH 5C / GREEN / JAE IL-AG5-5S-S3C1 From 7-9117			1	1	
. NS	563132	. CONNECTOR / SH 2C / YAZAKI 7283-6458-40 From 7-9117			1	1	
6	563273	I/O B-MODULE VOLVO MULTIPLEX / ALUMINUM To 7-9116			3	3	
. NS	563132	. CONNECTOR / SH 2C / YAZAKI 7283-6458-40 To 7-9116			1	1	
. NS	563133	. CONNECTOR / JUNIOR POWER TIMER / SH 29C / AMP 1-963449-2 To 7-9116			1	1	
. NS	562957	. CONNECTOR / SH 5C / GREEN / JAE IL-AG5-5S-S3C1 To 7-9116			1	1	
6	565865	I/O B-MODULE VOLVO MULTIPLEX / ALUMINUM From 7-9117			3	3	
. NS	563132	. CONNECTOR / SH 2C / YAZAKI 7283-6458-40 From 7-9117			1	1	
. NS	563133	. CONNECTOR / JUNIOR POWER TIMER / SH 29C / AMP 1-963449-2 From 7-9117			1	1	
. NS	562957	. CONNECTOR / SH 5C / GREEN / JAE IL-AG5-5S-S3C1 From 7-9117			1	1	
9	563274	CECM VOLVO MULTIPLEX MODULE			1	1	
10	563295	MASTER ID-MODULE VOLVO MULTIPLEX			1	1	
. NS	562794	. CONNECTOR / JUNIOR POWER TIMER / SH 9C / AMP 964561-4			1	1	
10	069538	"MASTER ID" REPLACEMENT WITH "MCM" MODULE			1	1	
. NS	069420	. HARNESS MCM			1	1	
. NS	IS-11003	. SEE INSTRUCTION SHEET			1	1	
10	066009	CABLE ADAPTOR / INTERFACE PC TO MASTER ID (3Meter)			1	1	
. NS	562650	. CONNECTOR / HDP-20 / SH 9C / AMP 205203-1			2	2	
11	7770363	CONTROL UNIT 12V / ABS 4 CH / UNPROGRAMMED			1	1	
11	641948P	CONTROL UNIT 12V / ABS 4 CH / PROGRAMMED			1	1	
12	382126	SUPPORT FRONT PANEL UPPER FORWARD			1	1	
13	382129	SUPPORT FRONT PANEL UPPER BACKWARD			1	1	
15	382179	ROD ATTACHMENT / I/O A MODULE			2	2	
16	382166	ROD ATTACHMENT / I/O B MODULE			2	2	
19	382167	ROD ATTACHMENT CABLE			1	1	
20	500945	SCREW TC BDG PH #10-24x1/2 G500			AR	AR	
21	504013	TIE MOUNT / 1/4" X 1/4" I.D.			AR	AR	
22	504347	RIVET POP DOME OE 3/16x1/4 AL			AR	AR	
24	381145	DIODE ASSY / W/5 3AMPS			2	2	
25	561991	RELAY 24V S.P.S.T. / 70 AMPS N.O.			2	2	
27	952627	CLAMP / 1/2" I.D.			2	2	
28	560422	BLOCK, TERMINAL / 1 STUD 3/8-16 / BLACK			1	1	

From 7-9096 To 8-9339		Date:07/2024	PAGE:Y2-0625-01

FRONT JUNCTION PANEL / MUX

Item#	Part	Description	XLII 45	XLII MTH40	XLII MTH45	XLII MTH45E	NOTES
29	500478	WASHER LO SPT .380x.683x.094 Z050			1	1	
30	500379	NUT HEX 3/8-16 BR			1	1	
31	500623	SCREW TC PAN PH #10-24x3/4 N500			1	1	
32	504637	CABLE TIE / 3/16" x 13"			AR	AR	
33	563033	E.C.U. / W/STEERING ASSIST (STP 272 or 330) ((77//125))			1	1	
34	563218	JUNCTION BLOCK W/5 STUDS			1	1	
NS	500765	NUT HEX #10-32 BR			AR	AR	
40	382169	HINGE ROD ATTACHMENT			5	5	
41	509827	SCREW MA RND PH M4-0.7x20 SS			9	9	
42	504340	RIVET POP DOME OE 1/8x3/16 SS			12	12	
43	502868	SCREW TC TR PH #10-16x1/2 N500			AR	AR	
44	500965	SCREW TC BDG PH #8-32x1/2 N500			AR	AR	
45	563541	KEYLESS MODULE / 350' RANGE			1	1	
46	382162	SUPPORT UPPER KEYLESS MODULE			1	1	
47	382163	SUPPORT LOWER KEYLESS MODULE			1	1	
50	286967	PROTECTOR FRONT ELECTRIC COMPARTMENT			1	1	
51	502531	SCREW CAP HEX M6-1.0x16 G8.8 Z050			4	4	
52	500411	WASHER FL .260x.697x.050 SS			10	10	
53	502570	WASHER LO SPT 6.1x11.8x1.6 SS			6	6	
54	287210	ATTACHMENT PLATE W/NUT			2	2	
55	500641	SCREW TP PAN PH #8x3/4 Z050			4	4	
56	500438	WASHER FL .187x.437x.050 Z050			4	4	
57	384286	RETAINER UPPER			1	1	
58	382360	RETAINER LOWER			1	1	
59	901052	LATCH RUBBER			2	2	
60	066584	DECAL "FRT JCT BOX" COMPONENTS			1	1	
60	067013	DECAL "FRT JCT BOX" COMPONENTS			1	1	
61	066155	DECAL PIN OUT / JCT BOX W/MUX			1	1	
		P) FOR PRODUCT IMPROVEMENT FUSE F82 MAY BE REPLACE BY MINI BREAKER # 564464 WITH NEW DECAL # 382408					

From Y-7046 To 7-9095		Date:07/2024	PAGE:Y2-0625-10
FRONT JUNCTION BOX - INSTALLATION			

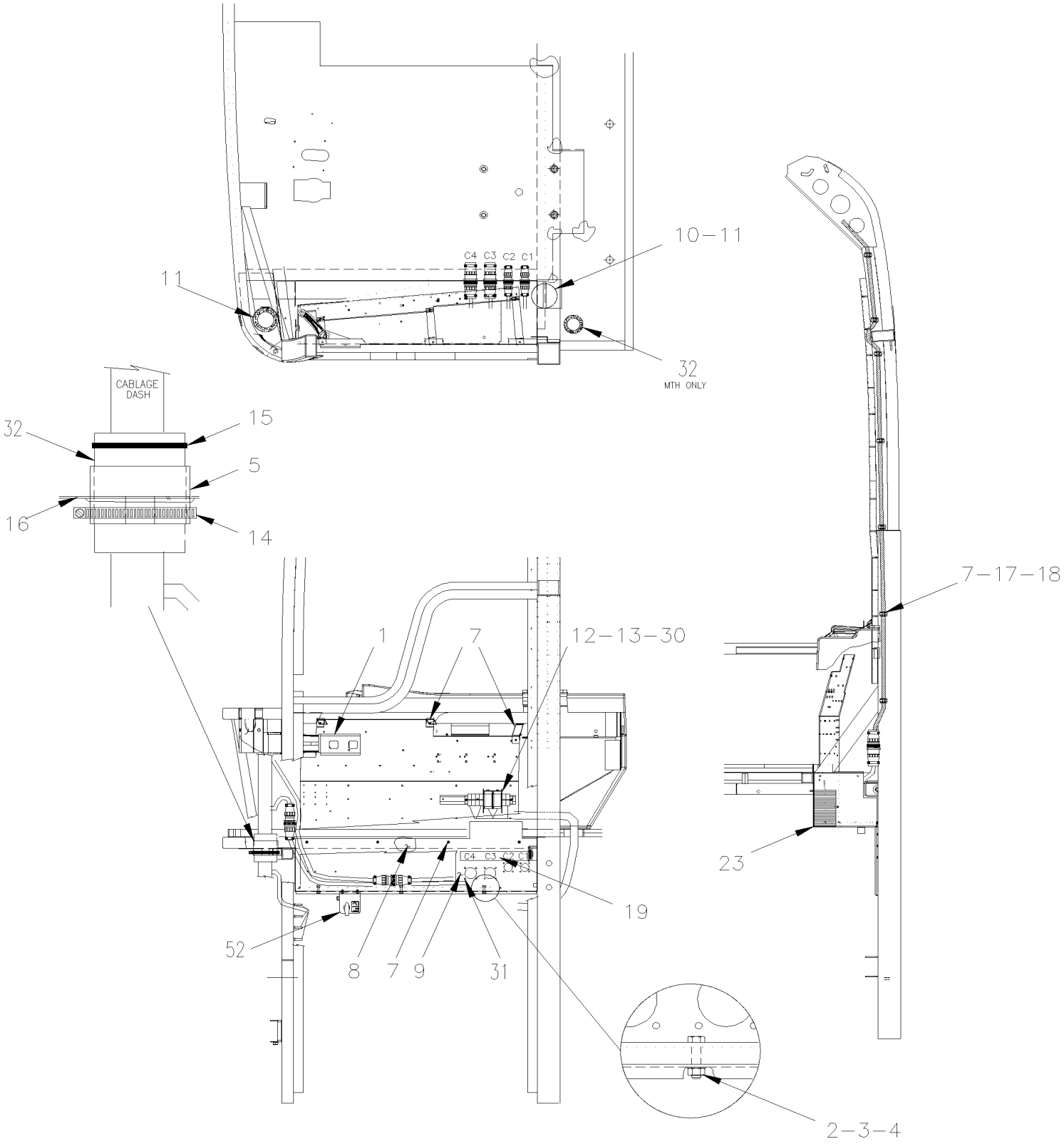

From Y-7046 To 7-9095		Date:07/2024	PAGE:Y2-0625-10
FRONT JUNCTION BOX - INSTALLATION			

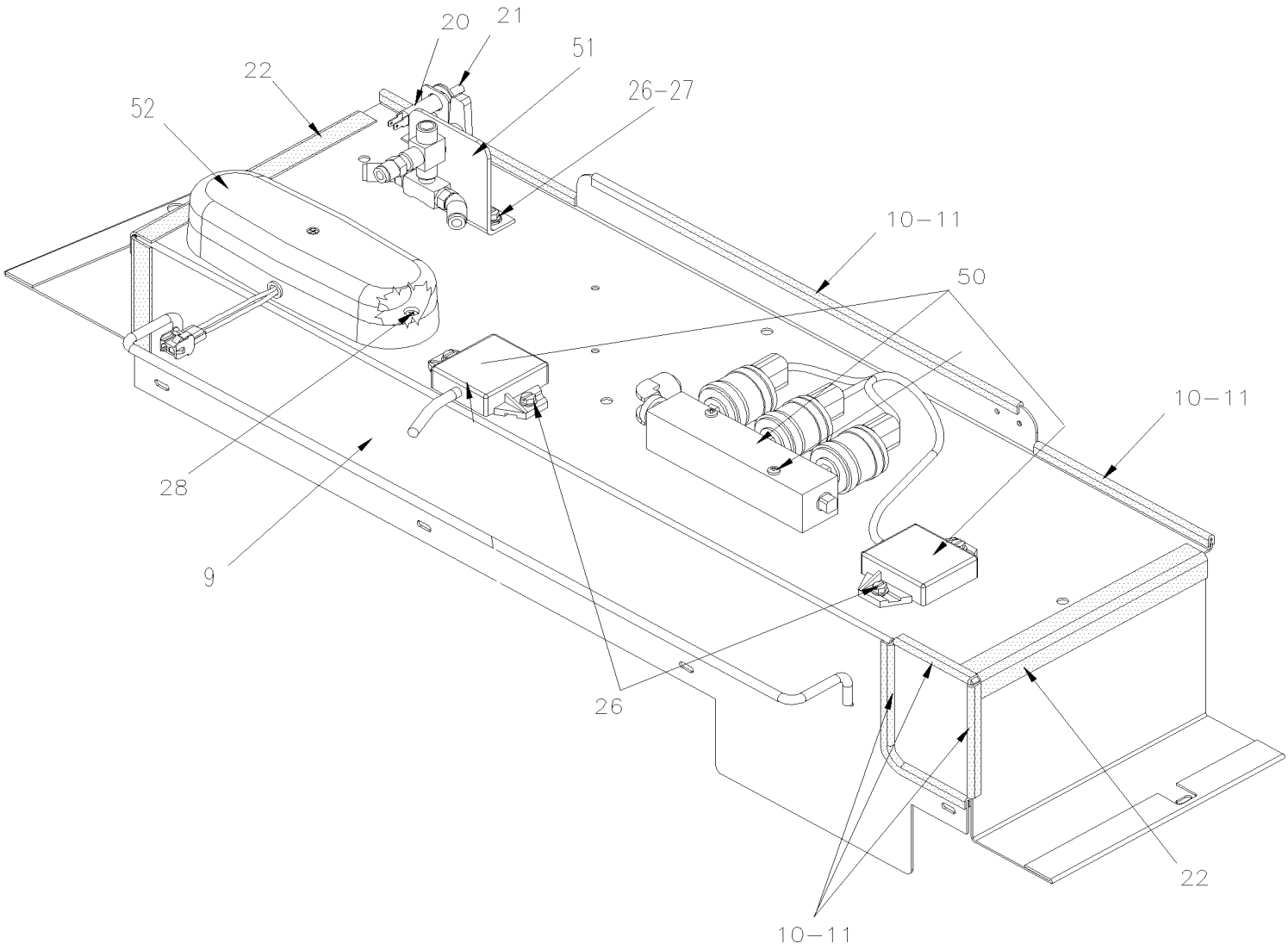

From Y-7046 To 7-9095		Date:07/2024	PAGE:Y2-0625-10

FRONT JUNCTION BOX - INSTALLATION

Item#	Part	Description	XLII 45	XLII MTH40	XLII MTH45	XLII MTH45E	NOTES
1	**Y2-0625-00**	**FRONT JUNCTION PANEL**	1	1	1	1	
2	502511	NUT HEX NYRT M6-1.0 Z050	3	3	3	3	
3	502564	WASHER LO SPT 6.1x11.8x1.6 Z050	3	3	3	3	
4	502737	SCREW CAP HEX M6-1.0x25 SS BK	3	3	3	3	
5	065035	TUBE PVC / 3" X 50MM		1	1	1	
7	500641	SCREW TP PAN PH #8x3/4 Z050	16	16	16	16	
8	680532	SEALANT SIKA #221 / GREY / 310ml CARTRIDGE	AR	AR	AR	AR	
9	381940	SUPPORT FRONT BOX		1	1	1	
90	381906	SUPPORT FRONT BOX To 6-8906	1				
10	506338	RUBBER CHANNEL / 1/16" x 1/4" INT "U" SHAPE / ROUND C.T.L.	3	3	3	3	
11	680066	ADHESIVE / ADBOND #5014 / 23.6ML BOTTLE	AR	AR	AR	AR	
12	500615	NUT HEX M8-1.25 BR	1	1	1	1	
13	064993	CABLE ASSY / 12Volt "CB" DELIVERY		1	1	1	
14	504026	HOSE CLAMP / 2"13/16-3"3/4 SS / HS-52		1	1	1	
15	504637	CABLE TIE / 3/16" x 13"		4	4	4	
16	680067	SEALANT TAPE BUTYL / BLACK / 1/8"x3/4"x25' / 75211E760		AR	AR	AR	
17	504013	TIE MOUNT / 1/4" X 1/4" I.D.	7	7	7	7	
18	504637	CABLE TIE / 3/16" x 13"	7	7	7	7	
19	064428	DECAL CONNECTOR / C1,C2,C3,C4	1	1	1	1	
20	066638	SWITCH SUPPORT	1	1	1	1	
21	563464	SWITCH / S.P.S.T. / N.C. / W/RUBBER BOOT	1	1	1	1	
22	382402	FRONT PANEL BOX	2	2	2	2	
23	350980	INSULATION	1	1	1	1	
25	500508	SCREW TC PAN PH #10-32x1 1/2 Z050	1	1	1	1	
26	5001245	SCREW TC CAP HEXW SLT #12-24x1/2 Z050 To 6-8906	2				
27	500473	WASHER LO SPT .262x.489x.062 Z050 To 6-8906	2				
28	500430	SCREW TC PAN PH #8-32x1 1/4 SS BK	2	2	2	2	
30	062963	CABLE ASSY / 12V POWER C.B. To 6-8906	1				
31	500124	SCREW TP TR PH #8x1/2 SS	16	16	16	16	
32	371600	INSULATING PAD 76.2MM x 374.7MM		2	2	2	
50	**Y2-0750-00**	**AUTOMATIC TRANSMISSION - "WORLD" WITH DETROIT S-60**	1	1	1	1	
51	**Y2-0665-10**	**SWITCHES, LIGHTS, AJAR - UNDER FLOOR**	1	1	1	1	
52	**Y2-1802-00**	**ENTRANCE DOOR CONTROL**	1				

From 7-9096 To 8-9339		Date:07/2024	PAGE:Y2-0625-11
FRONT JUNCTION BOX - INSTALLATION			

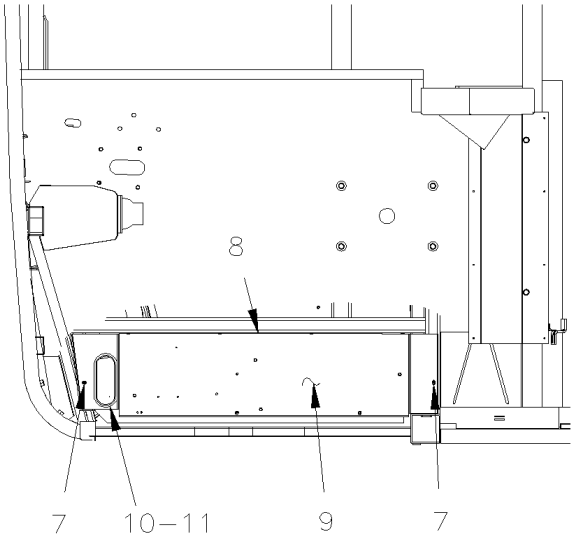

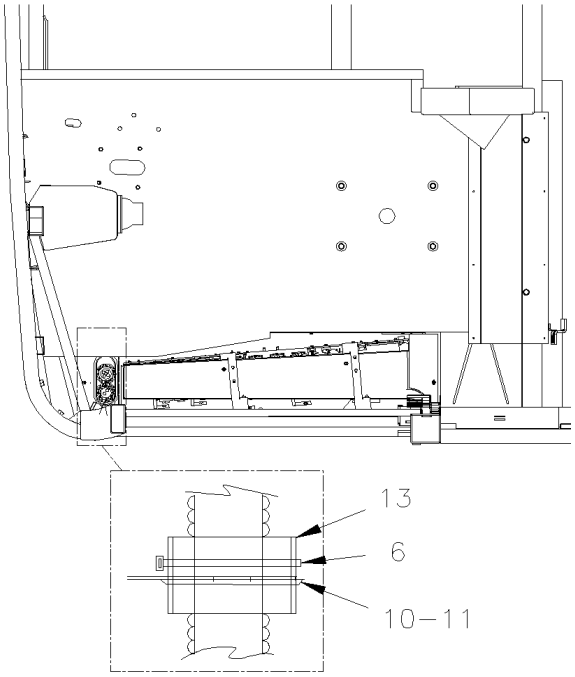

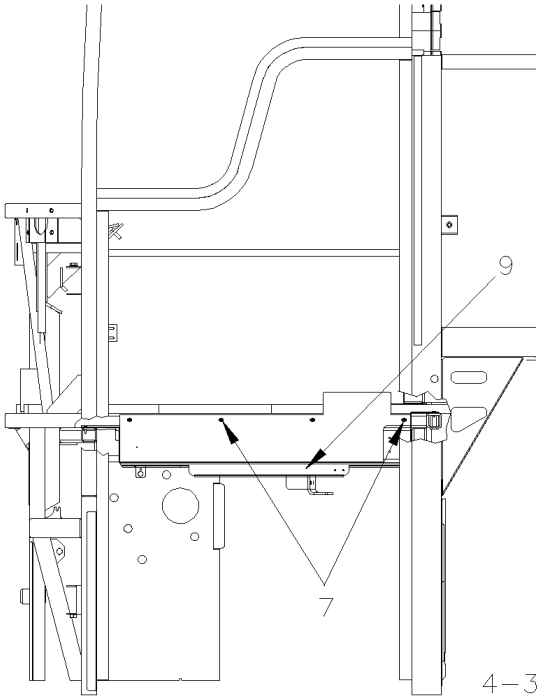

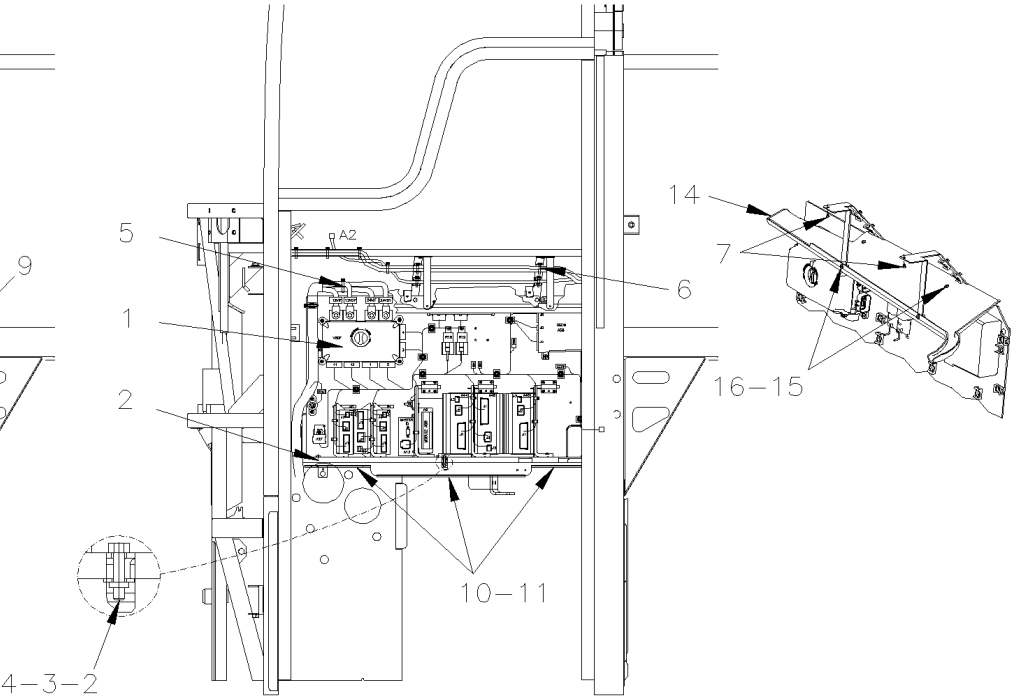

From 7-9096 To 8-9339		Date:07/2024	PAGE:Y2-0625-11
FRONT JUNCTION BOX - INSTALLATION			

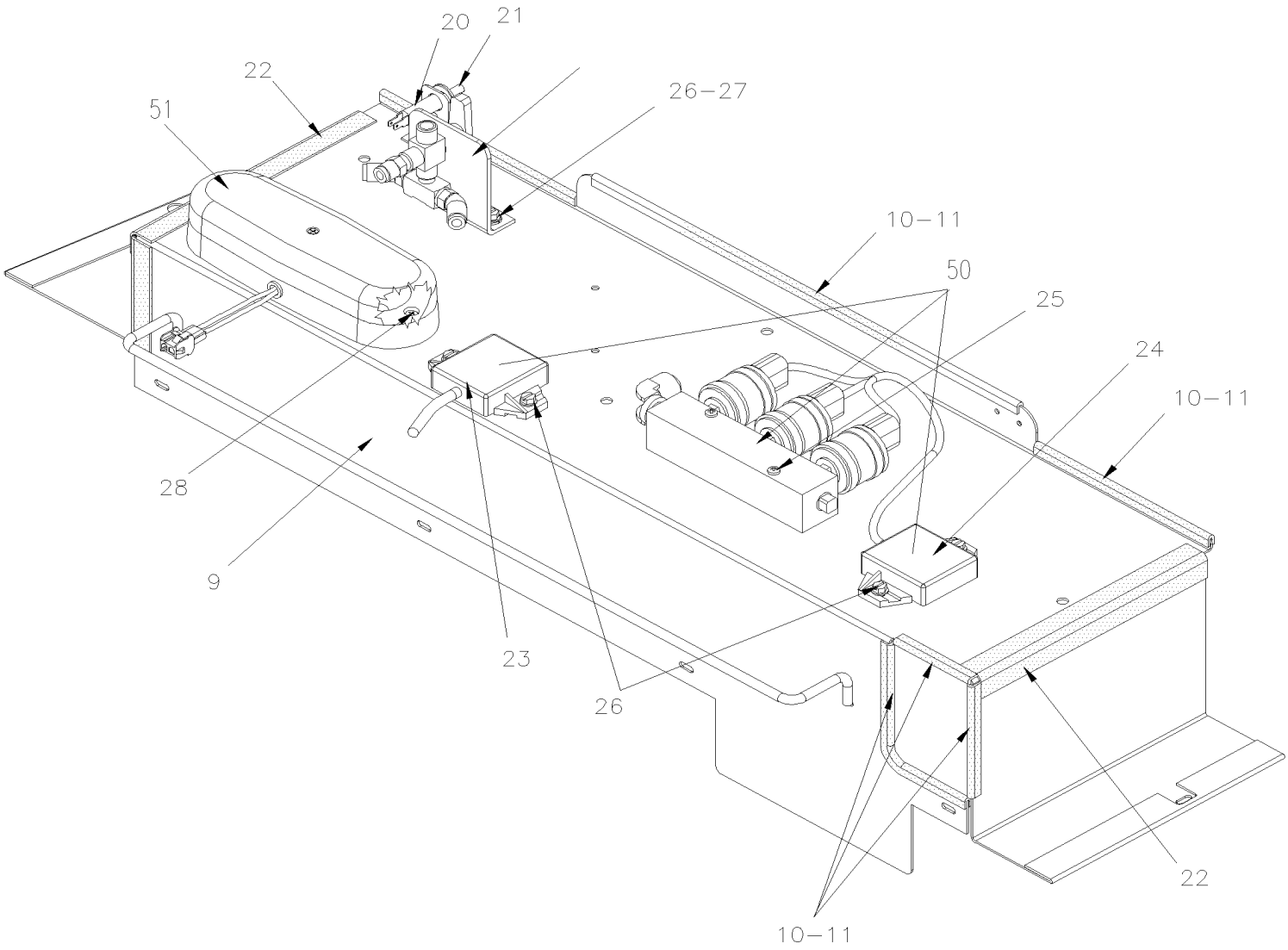

From 7-9096 To 8-9339		Date:07/2024	PAGE:Y2-0625-11

FRONT JUNCTION BOX - INSTALLATION

Item#	Part	Description	XLII 45	XLII MTH40	XLII MTH45	XLII MTH45E	NOTES
1	**Y2-0625-01**	**FRONT JUNCTION PANEL / MUX**	1	1	1	1	
2	502565	NUT HEX M6-1.0 SS			4	4	
3	502564	WASHER LO SPT 6.1x11.8x1.6 Z050			4	4	
4	502737	SCREW CAP HEX M6-1.0x25 SS BK			1	1	
5	504016	CABLE TIE / 5/16" X 14"1/2			AR	AR	
6	504637	CABLE TIE / 3/16" x 13"			AR	AR	
7	500641	SCREW TP PAN PH #8x3/4 Z050			6	6	
8	680532	SEALANT SIKA #221 / GREY / 310ml CARTRIDGE			AR	AR	
9	382188	SUPPORT FRONT JCT BOX To 7-9232			1	1	
9	382378	SUPPORT FRONT JCT BOX From 7-9233			1	1	
10	506338	RUBBER CHANNEL / 1/16" x 1/4" INT "U" SHAPE / ROUND C.T.L.			AR	AR	
11	680066	ADHESIVE / ADBOND #5014 / 23.6ML BOTTLE			AR	AR	
12	500615	NUT HEX M8-1.25 BR			12	12	
13	371600	INSULATING PAD 76.2MM x 374.7MM			1	1	
14	382135	DRIP PAN FRONT JCT BOX			1	1	
15	502556	WASHER FL 4.3x9.0x0.8 SS			4	4	
16	502698	SCREW MA PAN PH M4-0.7x16 SS BK			4	4	
NS	5001182	NUT HEX NYRT M6-1.0 SS			1	1	
NS	500964	WASHER FL .203x.500x.047 Z050			1	1	
NS	064993	CABLE ASSY / 12Volt "CB" DELIVERY			1	1	
20	066638	SWITCH SUPPORT			1	1	
21	563464	SWITCH / S.P.S.T. / N.C. / W/RUBBER BOOT			1	1	
22	506758	TAPE RUB ADH1 NEO 1/16"X 1 1/2"X50'			AR	AR	
23	562357	RESISTANCE MODULE			1	1	
24	562381	RESISTANCE MODULE			1	1	
25	500508	SCREW TC PAN PH #10-32x1 1/2 Z050			AR	AR	
26	5001245	SCREW TC CAP HEXW SLT #12-24x1/2 Z050			AR	AR	
27	500473	WASHER LO SPT .262x.489x.062 Z050			AR	AR	
28	500430	SCREW TC PAN PH #8-32x1 1/4 SS BK			AR	AR	
50	**Y2-0750-01**	**AUTOMATIC TRANSMISSION - "WORLD" WITH DETROIT S-60**					
51	**Y2-0665-10**	**SWITCHES, LIGHTS, AJAR - UNDER FLOOR**					

From Y-7046 To 6-8906		Date:07/2024	PAGE:Y2-0628-00
CHIME BELL - INSTALLATION			

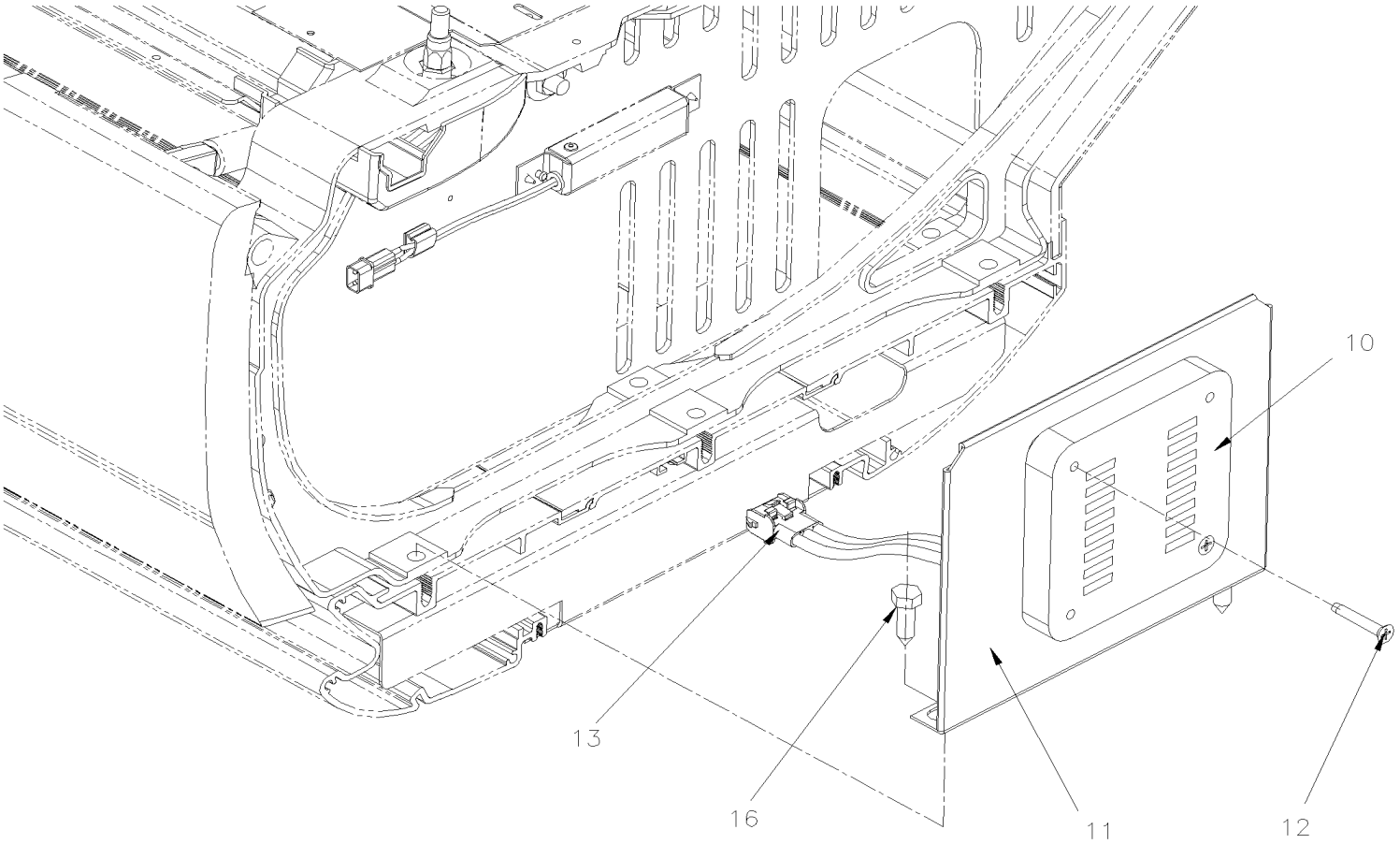

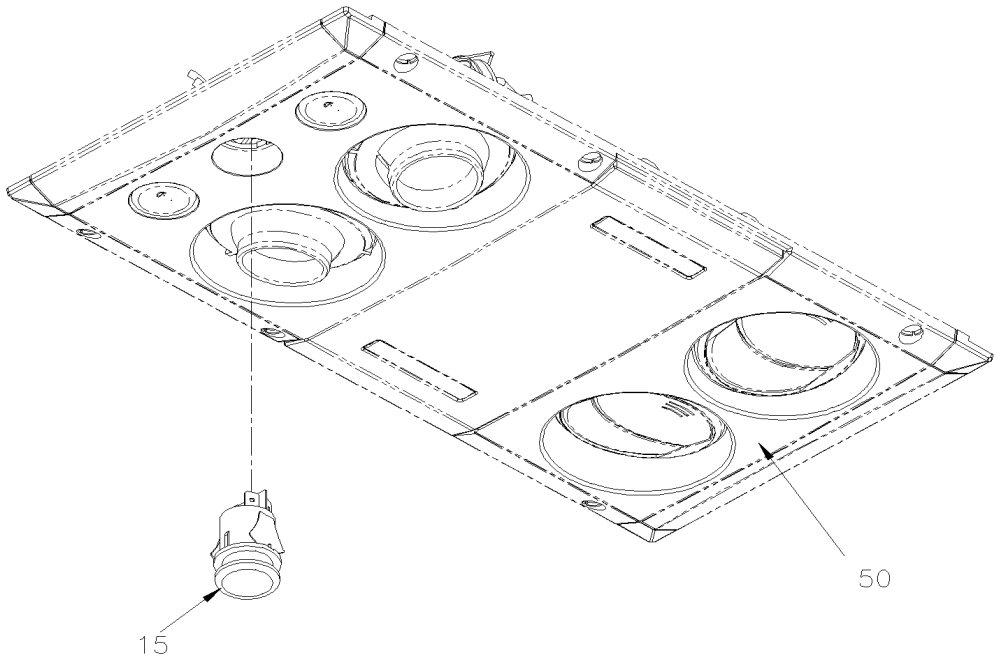

From Y-7046 To 6-8906		Date:07/2024	PAGE:Y2-0628-00

CHIME BELL - INSTALLATION

Item#	Part	Description	XLII 45	XLII MTH40	XLII MTH45	XLII MTH45E	NOTES
10	381854	CHIME / PASSENGER`S SIGNAL	1				
11	312709	. SUPPORT CHIM BELL	1				
12	500844	. SCREW TC FL PH #10-32x1 1/4 Z050	2				
13	561667	. CONNECTOR / UNIVERSAL MATE-N-LOK / PH 3C / AMP 1-480701-0	1				
NS	561671	. PIN TERMINAL / 24-18 / AMP 350690-1	2				
NS	562122	. PIN TERMINAL / 20-14 / AMP 350547-1	1				
NS	561740	. DIODE / 3AMPS	1				
15	830159	SWITCH / OFF-M/ON / S.P.S.T. / CHIME	AR				
16	502513	SCREW TP CAP HEX 5/16x1 Z050	2				
50	**Y2-0655-00**	**INTERIOR LIGHTING**					

From Y-7046 To 6-8906		Date:07/2024	PAGE:Y2-0630-00
CABLE & HARNESS - UNDER FLOOR - BUS			

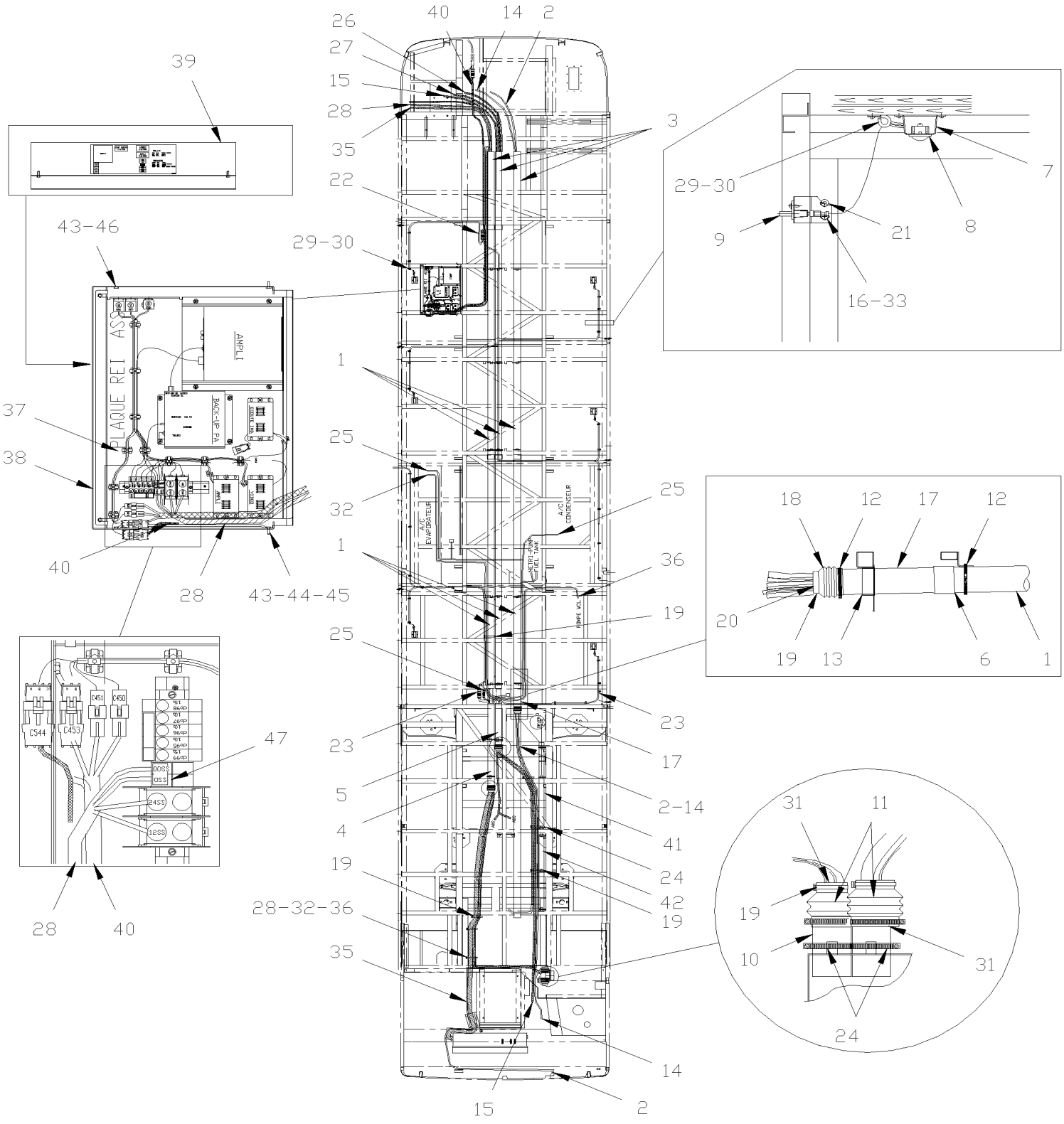

From Y-7046 To 6-8906		Date:07/2024	PAGE:Y2-0630-00

CABLE & HARNESS - UNDER FLOOR - BUS

Item#	Part	Description	XLII 45	XLII MTH40	XLII MTH45	XLII MTH45E	NOTES
1	503390	TUBE / PVC PIPE / 3"x10' WHITE PVC	6				
2	064410	CABLE ASSY / BACK-UP CAMERA VIDEO / CAMERA & MONITOR B&W / 60'	1				
. NS	990288	. CABLE BACK-UP CAMERA 60'	1				
. NS	561681	. CONVOLUTED TUBING / SLIT / BLACK & GRAY / .350"	25				
3	063384	TUBE PVC / 3" X 1020MM	3				
4	063386	TUBE PVC / 3" X 1090MM	1				
5	063760	TUBE PVC / 3" X 560MM	1				
6	680290	ADHESIVE PVC / 946ml	AR				
7	500235	SCREW TP BDG PH #6x3/4 N500	12				
8	**Y2-0655-00**	**INTERIOR LIGHTING**					
9	**Y2-0665-10**	**SWITCHES, LIGHTS, AJAR - UNDER FLOOR**					
10	380692	TUBE ABS	2				
11	504533	CUFF END BELLOW / 2 3/8" I.D. x 2 3/8" x 4"	2				
12	504026	HOSE CLAMP / 2"13/16-3"3/4 SS / HS-52	AR				
13	680096	SEALANT BUTYL ALUM / GREY / 310ml CARTRIDGE	AR				
14	404460	CABLE ASSY MICRO OUTPUT	1				
15	065597	CABLE ASSY / E.C.M. & ACCELERATOR PEDAL To 3-8164	1				
15	065787	CABLE ASSY / E.C.M. & ACCELERATOR PEDAL From 4-8165	1				
16	500432	SCREW TC PAN PH #8-32x3/4 Z050	12				
17	141843	TUBE PVC / 3" X 490MM W/F	17				
18	504499	CUFF END BELLOW / 2 7/8" I.D. x 3 5/8" x 4 7/16	3				
19	504016	CABLE TIE / 5/16" X 14"1/2	9				
20	371600	INSULATING PAD 76.2MM x 374.7MM	3				
21	504357	WASHER FL .187x.437x.050 SS	24				
22	065112	CABLE ASSY / FRONT BAGGAGE COMPARTMENT To 4-8358	1				
22	066042	CABLE ASSY FRT BAG COMP From 5-8359	1				
23	065577	CABLE ASSY / REAR BAGGAGE COMPARTMENT To 4-8358	1				
23	066041	CABLE ASSY REAR BAG COMP From 5-8359	1				
24	504024	HOSE CLAMP / 1"13/16"-2"3/4 SS / HS-36	10				
25	065636	CABLE ASSY / TO A/C BOX & FUEL TANK To 3-8101	1				
25	065769	CABLE ASSY / TO A/C BOX & FUEL TANK From 3-8102 To 5-8644	1				
25	066440	CABLE ASSY / ENGINE COMPT ACCESSORIES From 5-8645 To 6-8855	1				
25	066679	CABLE ASSY / ENGINE COMPT ACCESSORIES From 6-8856	1				
26	065631	CABLE ASSY / ABS MODULE TO FRONT & REAR CABLE	1				
27	064812	CABLE ASSY / TRANS & E.C.U. MODULE	1				
27	065848	CABLE ASSY "ZF" TRANSMISSION To 4-8358	1				
27	066124	CABLE ASSY "ZF" TRANSMISSION From 5-8359 To 5-8605	1				
27	066592	CABLE ASSY "ZF" TRANSMISSION From 5-8606	1				
28	065097	CABLE ASSY POWER	1				
29	952631	CLAMP / 3/4" I.D.	AR				
30	500244	SCREW TP BDG PH #8x3/4 N500	AR				
31	680096	SEALANT BUTYL ALUM / GREY / 310ml CARTRIDGE	AR				

From Y-7046 To 6-8906		Date:07/2024	PAGE:Y2-0630-00

CABLE & HARNESS - UNDER FLOOR - BUS

Item#	Part	Description	XLII 45	XLII MTH40	XLII MTH45	XLII MTH45E	NOTES
32	065088	CABLE ASSY #102	1				
33	500834	WASHER LO INT .168x.340x.023 N500	12				
34	504534	GROMMET / .875x1.250x.187x.562x1.625	6				
35	065594	CABLE ASSY / FRT JCT BOX & REAR JCT BOX To 5-8644	1				
35	066439	CABLE ASSY / FRT JCT BOX & REAR JCT BOX From 5-8645 To 6-8802	1				
35	066590	CABLE ASSY / FRT JCT BOX & REAR JCT BOX From 6-8803	1				
36	065341	CABLE ASSY #24WC	1				
37	**Y2-2315-00**	**SOUND SYSTEM & ACCESSORIES - "R.E.I."**					
38	404402	SUPPORT / PLATE ASSY	1				
39	404579	DECAL "SOUND SYSTEM"	1				
40	405315	CABLE ASSY / DASH & PLATE IN BAGGAGE	1				
41	142117	TUBE PVC / 2" X MM 1118MM	1				
42	142071	TUBE PVC / 2" X 1016MM W/ 1 HOLE	1				
43	500473	WASHER LO SPT .262x.489x.062 Z050	6				
44	500441	WASHER FL .312x.734x.065 Z050	4				
45	500769	NUT HEX 1/4-20 Z050	4				
46	500602	SCREW TH SHR 1/4-20x3/4	2				
47	500765	NUT HEX #10-32 BR	2				
48	680532	SEALANT SIKA #221 / GREY / 310ml CARTRIDGE	AR				

From Y-7046 To 7-9095		Date:07/2024	PAGE:Y2-0630-50
CABLE & HARNESS - UNDER FLOOR - MTH-40' & MTH-45' ENT			

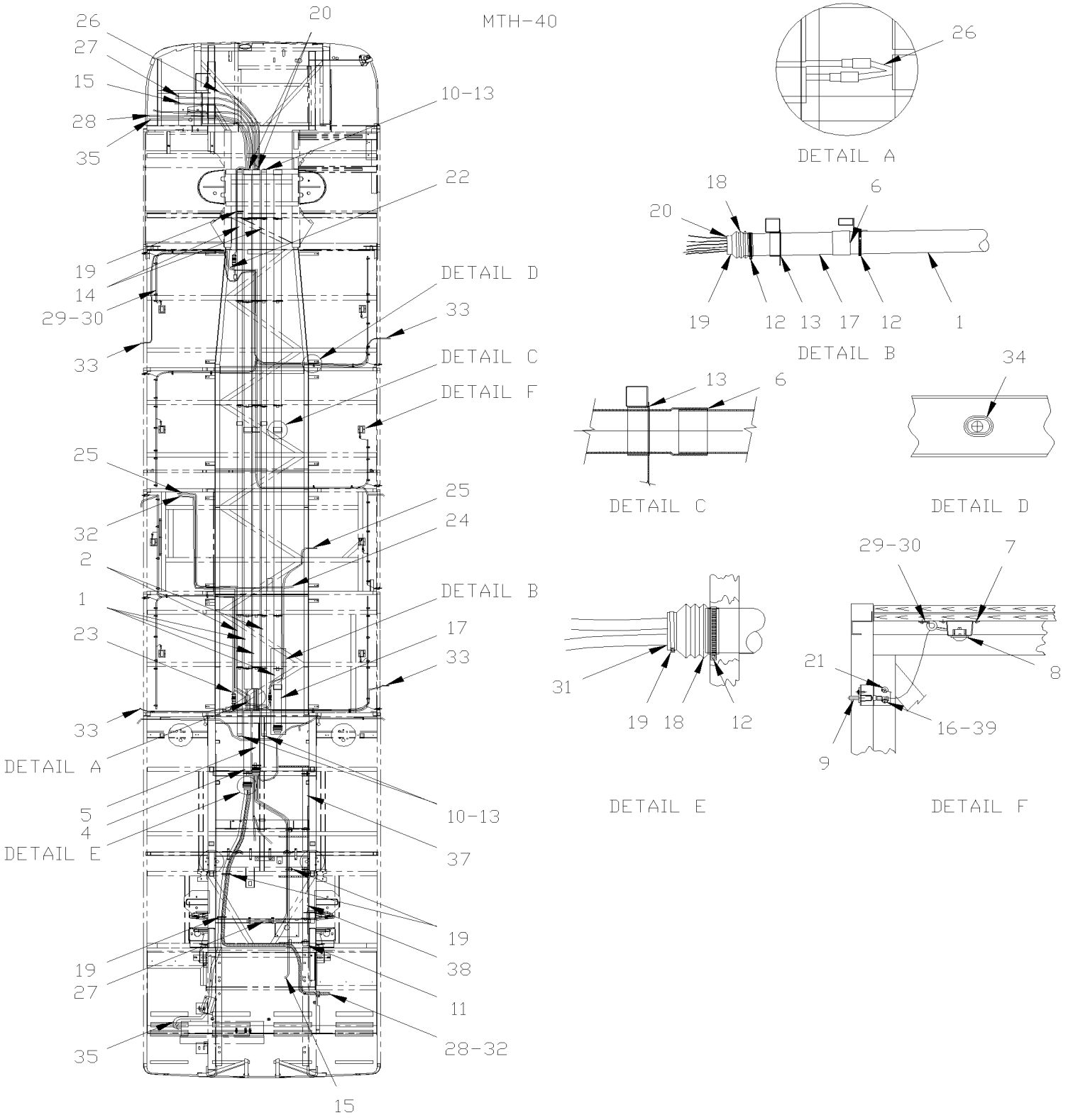

From Y-7046 To 7-9095		Date:07/2024	PAGE:Y2-0630-50
CABLE & HARNESS - UNDER FLOOR - MTH-40' & MTH-45' ENT			

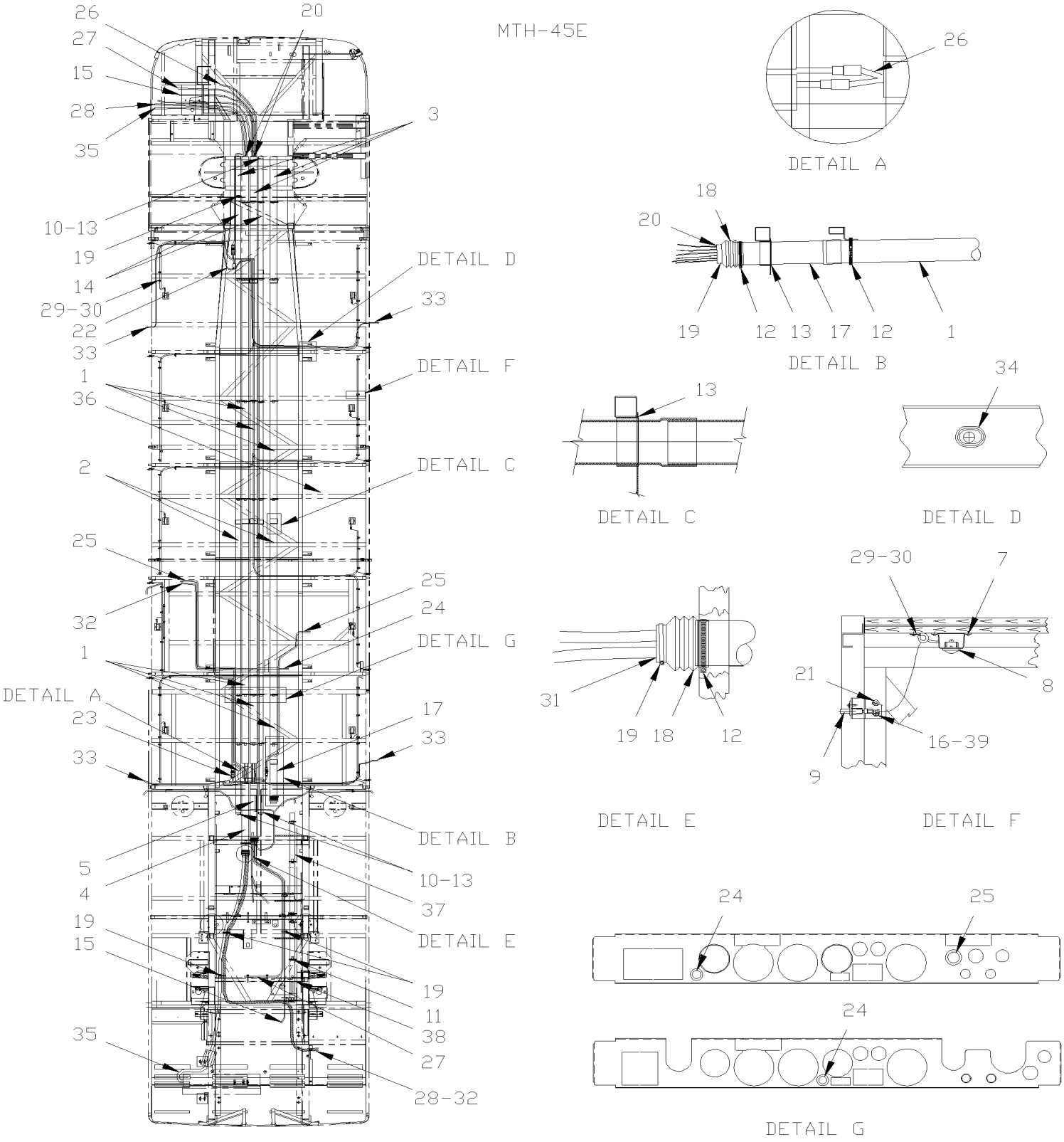

From Y-7046 To 7-9095		Date:07/2024	PAGE:Y2-0630-50

CABLE & HARNESS - UNDER FLOOR - MTH-40' & MTH-45' ENT

Item#	Part	Description	XLII 45	XLII MTH40	XLII MTH45	XLII MTH45E	NOTES
1	503390	TUBE / PVC PIPE / 3"x10' WHITE PVC		6		6	
2	065443	TUBE PVC / 2" X 3660MM W/F		2		2	
3	063796	TUBE PVC / 3" X 1575MM				3	
4	063550	TUBE PVC / 3" X 870MM		1		1	
5	063938	TUBE PVC / 3" X 680MM		1		1	
6	680290	ADHESIVE PVC / 946ml		AR		AR	
7	500235	SCREW TP BDG PH #6x3/4 N500		AR		AR	
8	**Y2-0655-00**	**INTERIOR LIGHTING**					
9	**Y2-0665-10**	**SWITCHES, LIGHTS, AJAR - UNDER FLOOR**					
10	504489	PLUG		4		4	
11	504024	HOSE CLAMP / 1"13/16"-2"3/4 SS / HS-36		18		18	
12	504026	HOSE CLAMP / 2"13/16-3"3/4 SS / HS-52		29		29	
13	680532	SEALANT SIKA #221 / GREY / 310ml CARTRIDGE		AR		AR	
14	065442	TUBE PVC / 2" X 2971MM		2			
14	065459	TUBE PVC / 2" X 1453MM				2	
15	065451	CABLE ASSY / E.C.M. & ACCELERATOR PEDAL To 3-8164		1			
15	065788	CABLE ASSY / E.C.M. & ACCELERATOR PEDAL From 4-8165		1			
15	065597	CABLE ASSY / E.C.M. & ACCELERATOR PEDAL To 3-8164				1	
15	065787	CABLE ASSY / E.C.M. & ACCELERATOR PEDAL From 4-8165				1	
16	500432	SCREW TC PAN PH #8-32x3/4 Z050		AR		AR	
17	141843	TUBE PVC / 3" X 490MM W/F		1		1	
18	504499	CUFF END BELLOW / 2 7/8" I.D. x 3 5/8" x 4 7/16		3		3	
19	504016	CABLE TIE / 5/16" X 14"1/2		9		9	
20	371600	INSULATING PAD 76.2MM x 374.7MM		3		3	
21	504357	WASHER FL .187x.437x.050 SS		AR		AR	
22	064872	CABLE ASSY / FRONT BAGGAGE COMPARTMENT To 5-8379		1			
22	066024	CABLE ASSY / FRONT BAGGAGE COMPARTMENT From 5-8380		1			
22	065196	CABLE ASSY / FRONT BAGGAGE COMPARTMENT To 5-8379				1	
22	066023	CABLE ASSY / FRONT BAGGAGE COMPARTMENT From 5-8380				1	
23	065578	CABLE ASSY / REAR BAGGAGE COMPARTMENT To 5-8379		1		1	
23	066022	CABLE ASSY / REAR BAGGAGE COMPARTMENT From 5-8380		1		1	
24	065699	CABLE ASSY / FUEL TANK		1		1	
25	065636	CABLE ASSY / TO A/C BOX & FUEL TANK To 4-8212		1		1	
25	065769	CABLE ASSY / TO A/C BOX & FUEL TANK From 4-8213 To 4-8226		1		1	
25	066004	CABLE ASSY / TO A/C BOX & FUEL TANK From 4-8227 To 5-8644		1		1	
25	066472	CABLE ASSY / TO A/C BOX & FUEL TANK From 5-8645		1		1	
26	065631	CABLE ASSY / ABS MODULE TO FRONT & REAR CABLE		1		1	
27	065260	CABLE ASSY / TRANS & E.C.U. MODULE To 7-9000		1			
27	066844	CABLE ASSY "WORLD" TRANSMISSION From 7-9001		1			
27	064812	CABLE ASSY / TRANS & E.C.U. MODULE To 7-9000				1	
27	Call order desk	CABLE ASSY "WORLD" TRANSMISSION From 7-9001				1	P
28	065299	CABLE ASSY POWER		1			

From Y-7046 To 7-9095		Date:07/2024	PAGE:Y2-0630-50

CABLE & HARNESS - UNDER FLOOR - MTH-40' & MTH-45' ENT

Item#	Part	Description	XLII 45	XLII MTH40	XLII MTH45	XLII MTH45E	NOTES
28	064887	CABLE ASSY POWER				1	
29	952631	CLAMP / 3/4" I.D.		AR		AR	
30	500244	SCREW TP BDG PH #8x3/4 N500		AR		AR	
31	680096	SEALANT BUTYL ALUM / GREY / 310ml CARTRIDGE		AR		AR	
32	065088	CABLE ASSY #102		1		1	
33	064888	CABLE ASSY / AUXILIARY SIDE MARKER LIGHT To 5-8358		2		2	
33	066038	CABLE ASSY / AUXILIARY SIDE MARKER LIGHT From 5-8359		2		2	
34	504534	GROMMET / .875x1.250x.187x.562x1.625		6		6	
35	065298	CABLE ASSY / FRT JCT BOX & REAR JCT BOX To 5-8358		1		1	
35	066027	CABLE ASSY / FRT JCT BOX & REAR JCT BOX From 5-8359 To 5-8644		1		1	
35	066351	CABLE ASSY / FRT JCT BOX & REAR JCT BOX From 5-8645		1		1	
36	503715	TUBE / PVC PIPE / 2"x10' GRAY PVC		2		2	
37	142116	TUBE PVC / 2" X MM 973MM		1		1	
38	142071	TUBE PVC / 2" X 1016MM W/ 1 HOLE		1		1	
39	500834	WASHER LO INT .168x.340x.023 N500		AR		AR	
		P) CALL ORDER DESK FOR SPECIFIC APPLICATION (V.I.N.)					

From 7-9096 To 8-9339		Date:07/2024	PAGE:Y2-0630-51

CABLE & HARNESS - UNDER FLOOR - MTH WITH / MUX

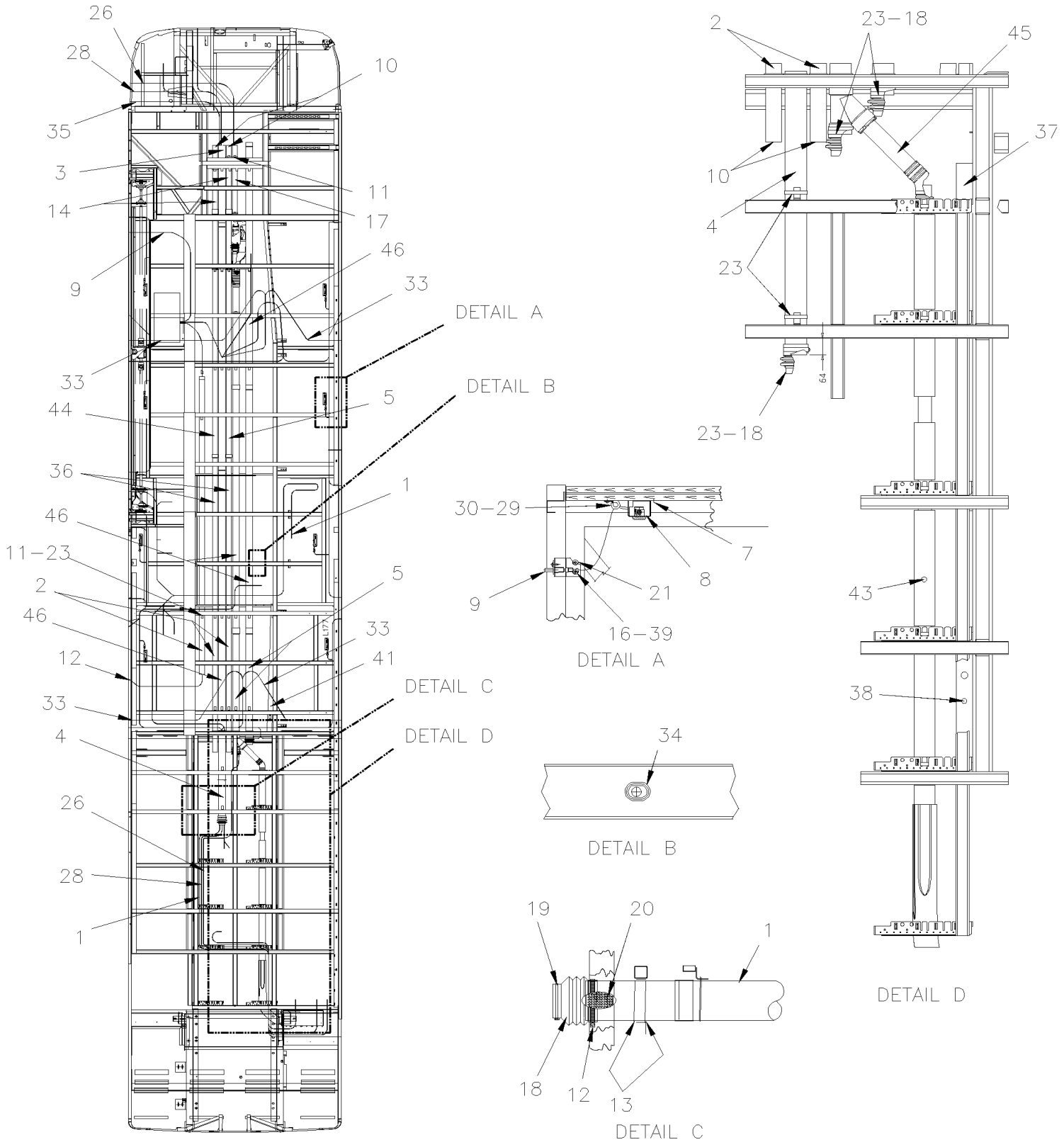

From 7-9096 To 8-9339		Date:07/2024	PAGE:Y2-0630-51

CABLE & HARNESS - UNDER FLOOR - MTH WITH / MUX

Item#	Part	Description	XLII 45	XLII MTH40	XLII MTH45	XLII MTH45E	NOTES
1	067012	CABLE ASSY / POWER HVAC			1		
1	066782	CABLE ASSY / EVAPORATOR ACCESSORIES COMPARTMENT				1	
2	065443	TUBE PVC / 2" X 3660MM W/F			AR	AR	
3	063384	TUBE PVC / 3" X 1020MM			1		
3	063796	TUBE PVC / 3" X 1575MM				1	
4	063386	TUBE PVC / 3" X 1090MM			1		
4	066983	TUBE PVC / 3" X 456MM		1			
4	066698	TUBE PVC / 3" X 1980MM				1	
5	066929	TUBE PVC / 3" X 1350MM			1		
6	066170	TUBE PVC / 2" X 1450MM				1	
NS	680290	ADHESIVE PVC / 946ml			AR		
7	5001452	SCREW TP PAN PH #8x1 1/2 SS			AR		
8	330372	LAMP ASSY 24V / BAGGAGE COMPARTMENT LAMP W//2 BULBS 5W To 7-9224			AR	AR	
8	330224	LAMP ASSY 24V / BAGGAGE COMPARTMENT LAMP W/2 BULBS G4-10W From 7-9225			1	1	
. NS	330396	. BULB / 10 WATTS -28VOLTS / SAE# G4-28 From 7-9225			2	2	
9	066533	SWITCH ASSY / BAGGAGE COMPARTMENT			AR	AR	
10	504489	PLUG			4	4	
11	504024	HOSE CLAMP / 1"13/16"-2"3/4 SS / HS-36			23	23	
12	504023	HOSE CLAMP / 1"5/16-2"1/4 SS / HS-28			20	20	
13	680532	SEALANT SIKA #221 / GREY / 310ml CARTRIDGE			AR	AR	
14	065460	TUBE PVC / 2" X 845MM			2		
14	065459	TUBE PVC / 2" X 1453MM				2	
16	500432	SCREW TC PAN PH #8-32x3/4 Z050			AR	AR	
17	066919	TUBE PVC / 2" X 900MM			1	1	
18	504499	CUFF END BELLOW / 2 7/8" I.D. x 3 5/8" x 4 7/16			3	3	
19	504016	CABLE TIE / 5/16" X 14"1/2			9	9	
20	371600	INSULATING PAD 76.2MM x 374.7MM			AR	AR	
21	504357	WASHER FL .187x.437x.050 SS			AR	AR	
22	066779	CABLE FRONT BAGGAGE COMPARTMENT				1	
23	504026	HOSE CLAMP / 2"13/16-3"3/4 SS / HS-52			AR	AR	
26	066962	CABLE ASSY / FJB TO "ABS" & CABLE FRT & RR			1	1	
28	066886	CABLE ASSY / FRT JCT BOX & REAR JCT BOX			1	1	
29	952631	CLAMP / 3/4" I.D.			AR	AR	
30	500641	SCREW TP PAN PH #8x3/4 Z050			AR	AR	
33	066781	CABLE ASSY / SIDE MARKER "ADDITIONAL"			AR	AR	
34	504534	GROMMET / .875x1.250x.187x.562x1.625			6	6	
35	066778	CABLE ASSY / POWER TO FRONT ACCESSORIES				1	
36	503715	TUBE / PVC PIPE / 2"x10' GRAY PVC			2		
37	142070	TUBE PVC / 2" X 1270MM			1		
37	144849	TUBE PVC / 2" X 1320MM				1	
38	142071	TUBE PVC / 2" X 1016MM W/ 1 HOLE			1		
380	144850	TUBE PVC / 2" X 1000MM W/ 1 HOLE				1	

From 7-9096 To 8-9339		Date:07/2024	PAGE:Y2-0630-51

CABLE & HARNESS - UNDER FLOOR - MTH WITH / MUX

Item#	Part	Description	XLII 45	XLII MTH40	XLII MTH45	XLII MTH45E	NOTES
39	500834	WASHER LO INT .168x.340x.023 N500			12		
NS	500022	WASHER LO INT .168x.340x.023 Z050			4		
40	562679	4 WAY ADH. BACKED MOUNTS 1.000 x 1.000 x .160			1		
41	066112	TUBE PVC / 2" X 1575MM			1		
42	**Y2-0620-05**	**REAR JUNCTION BOX FAN - INSTALLATION**					
43	Call order desk	TUBE PVC 2" X VEHICULE ASSY W/INSULATED NOT FO SALE			1		P
44	066947	TUBE PVC / 3" X 3048MM			1		
45	Call order desk	TUBE PVC Y 3" X 3" X 3" ASSY NOT FO SALE			1		P
46	503390	TUBE / PVC PIPE / 3"x10' WHITE PVC			AR		
		P) CALL ORDER DESK FOR SPECIFIC APPLICATION (V.I.N.)					

From Y-7046 To 7-9095		Date:07/2024	PAGE:Y2-0630-60
CABLE & HARNESS - UNDER FLOOR - MTH-45'			

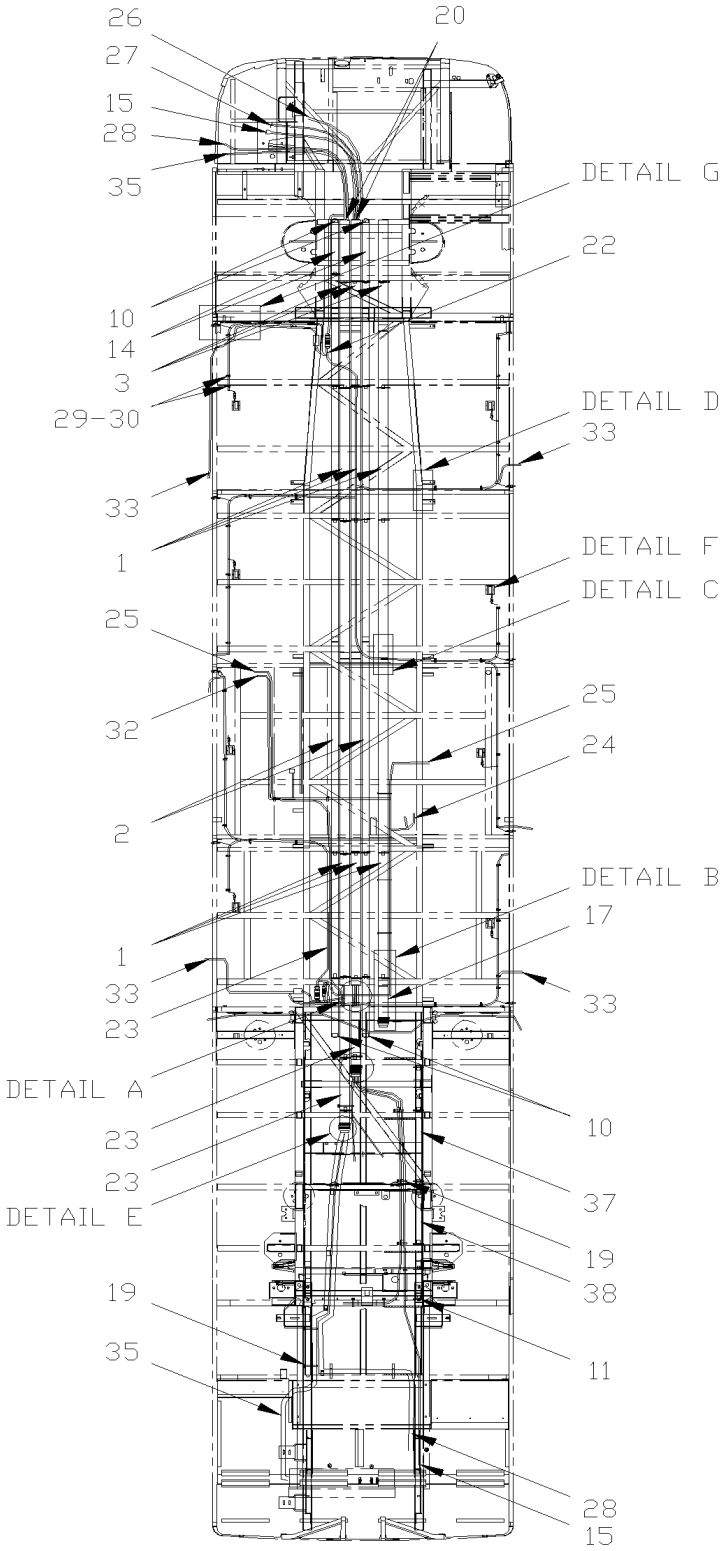

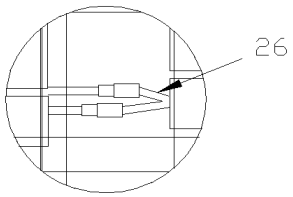

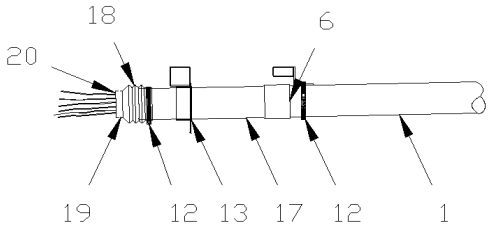

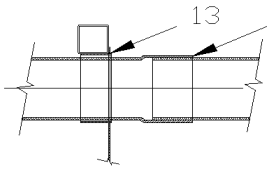

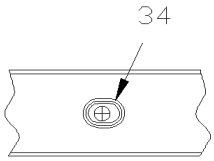

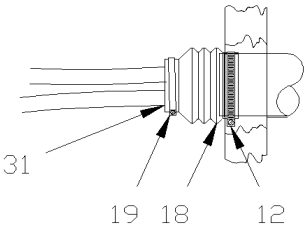

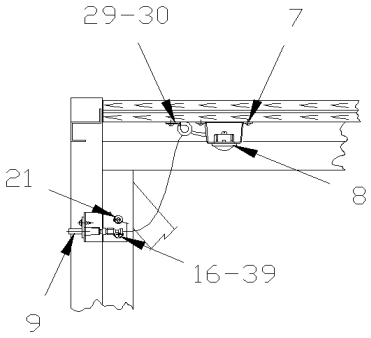

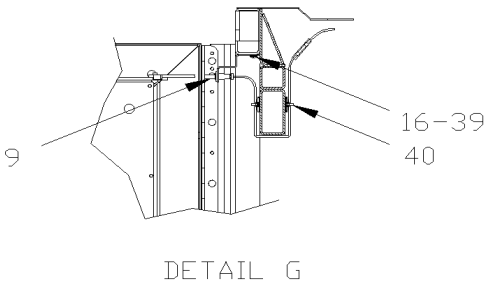

From Y-7046 To 7-9095		Date:07/2024	PAGE:Y2-0630-60

CABLE & HARNESS - UNDER FLOOR - MTH-45'

Item#	Part	Description	XLII 45	XLII MTH40	XLII MTH45	XLII MTH45E	NOTES
1	503390	TUBE / PVC PIPE / 3"x10' WHITE PVC			6		
2	065443	TUBE PVC / 2" X 3660MM W/F			2		
3	063384	TUBE PVC / 3" X 1020MM			3		
4	063386	TUBE PVC / 3" X 1090MM			1		
5	063760	TUBE PVC / 3" X 560MM			1		
6	680290	ADHESIVE PVC / 946ml			AR		
7	500235	SCREW TP BDG PH #6x3/4 N500			AR		
8	**Y2-0655-00**	**INTERIOR LIGHTING**					
9	**Y2-0665-10**	**SWITCHES, LIGHTS, AJAR - UNDER FLOOR**					
10	504489	PLUG			4		
11	504024	HOSE CLAMP / 1"13/16"-2"3/4 SS / HS-36			18		
12	504026	HOSE CLAMP / 2"13/16-3"3/4 SS / HS-52			29		
13	680532	SEALANT SIKA #221 / GREY / 310ml CARTRIDGE			AR		
14	065460	TUBE PVC / 2" X 845MM			2		
15	065597	CABLE ASSY / E.C.M. & ACCELERATOR PEDAL To 3-8164			1		
15	065787	CABLE ASSY / E.C.M. & ACCELERATOR PEDAL From 4-8165			1		
16	500654	SCREW TC BDG PH #8-32x1/2 Z050			AR		
17	141843	TUBE PVC / 3" X 490MM W/F			1		
18	504499	CUFF END BELLOW / 2 7/8" I.D. x 3 5/8" x 4 7/16			3		
19	504016	CABLE TIE / 5/16" X 14"1/2			9		
20	371600	INSULATING PAD 76.2MM x 374.7MM			3		
21	504357	WASHER FL .187x.437x.050 SS			AR		
22	064872	CABLE ASSY / FRONT BAGGAGE COMPARTMENT To 5-8379			1		
22	066024	CABLE ASSY / FRONT BAGGAGE COMPARTMENT From 5-8380			1		
23	065578	CABLE ASSY / REAR BAGGAGE COMPARTMENT			1		
23	066022	CABLE ASSY / REAR BAGGAGE COMPARTMENT From 5-8380			1		
24	065699	CABLE ASSY / FUEL TANK			1		
25	065636	CABLE ASSY / TO A/C BOX & FUEL TANK To 4-8212			1		
25	065769	CABLE ASSY / TO A/C BOX & FUEL TANK From 4-8213 To 4-8226			1		
25	066004	CABLE ASSY / TO A/C BOX & FUEL TANK From 4-8227 To 5-8644			1		
25	066472	CABLE ASSY / TO A/C BOX & FUEL TANK From 5-8645			1		
26	065631	CABLE ASSY / ABS MODULE TO FRONT & REAR CABLE			1		
27	064812	CABLE ASSY / TRANS & E.C.U. MODULE To 7-9000			1		
27	Call order desk	CABLE ASSY "WORLD" TRANSMISSION From 7-9001			1		P
28	064887	CABLE ASSY POWER			1		
29	952631	CLAMP / 3/4" I.D.			AR		
30	500641	SCREW TP PAN PH #8x3/4 Z050			AR		
31	680123	SEALANT BUTYL ALUM / GREY / 50Gl U.S.			AR		
32	065088	CABLE ASSY #102			1		
33	064888	CABLE ASSY / AUXILIARY SIDE MARKER LIGHT To 5-8358			2		
33	066038	CABLE ASSY / AUXILIARY SIDE MARKER LIGHT From 5-8359			2		
34	504534	GROMMET / .875x1.250x.187x.562x1.625			6		

From Y-7046 To 7-9095		Date:07/2024	PAGE:Y2-0630-60

CABLE & HARNESS - UNDER FLOOR - MTH-45'

Item#	Part	Description	XLII 45	XLII MTH40	XLII MTH45	XLII MTH45E	NOTES
35	064804	CABLE ASSY / FRT JCT BOX & REAR JCT BOX To 5-8379			1		
35	066026	CABLE ASSY / FRT JCT BOX & REAR JCT BOX From 5-8380 To 5-8644			1		
35	066345	CABLE ASSY / FRT JCT BOX & REAR JCT BOX From 5-8645			1		
36	503715	TUBE / PVC PIPE / 2"x10' GRAY PVC			2		
37	142070	TUBE PVC / 2" X 1270MM			1		
38	142071	TUBE PVC / 2" X 1016MM W/ 1 HOLE			1		
39	500834	WASHER LO INT .168x.340x.023 N500			AR		
40	562679	4 WAY ADH. BACKED MOUNTS 1.000 x 1.000 x .160			6		
		P) CALL ORDER DESK FOR SPECIFIC APPLICATION (V.I.N.)					

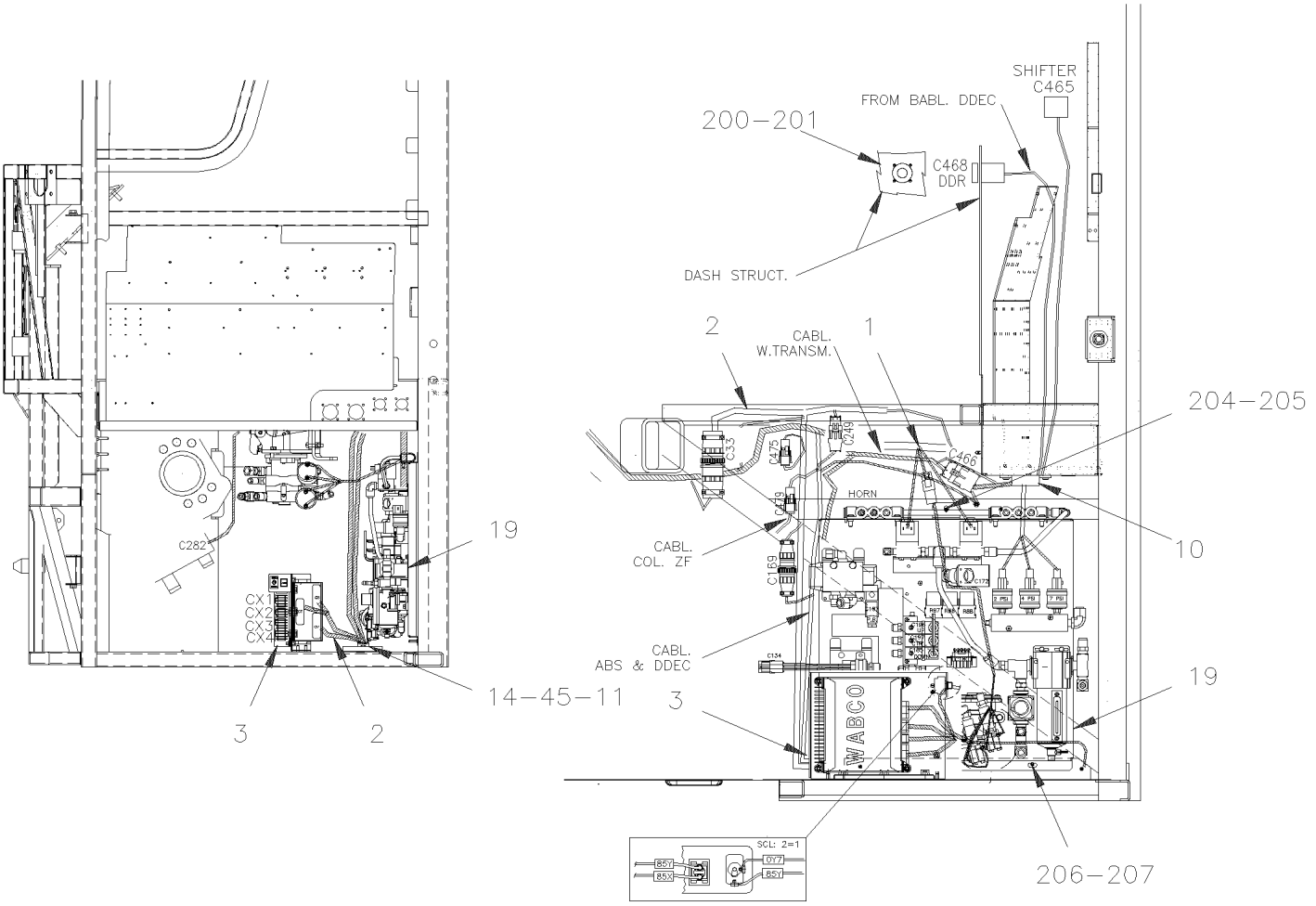
SHIFTER C465
FROM BABL. DDEC
200–201
C468 DDR
DASH STRUCT.
2
CABL. W.TRANSM.
1
204–205
C282
19
CX1
CX2
CX3
CX4
HORN
CABL. COL. ZF
10
CABL. ABS & DDEC
14–45–11
3
2
3
19
WABCO
SCL: 2=1
206–207

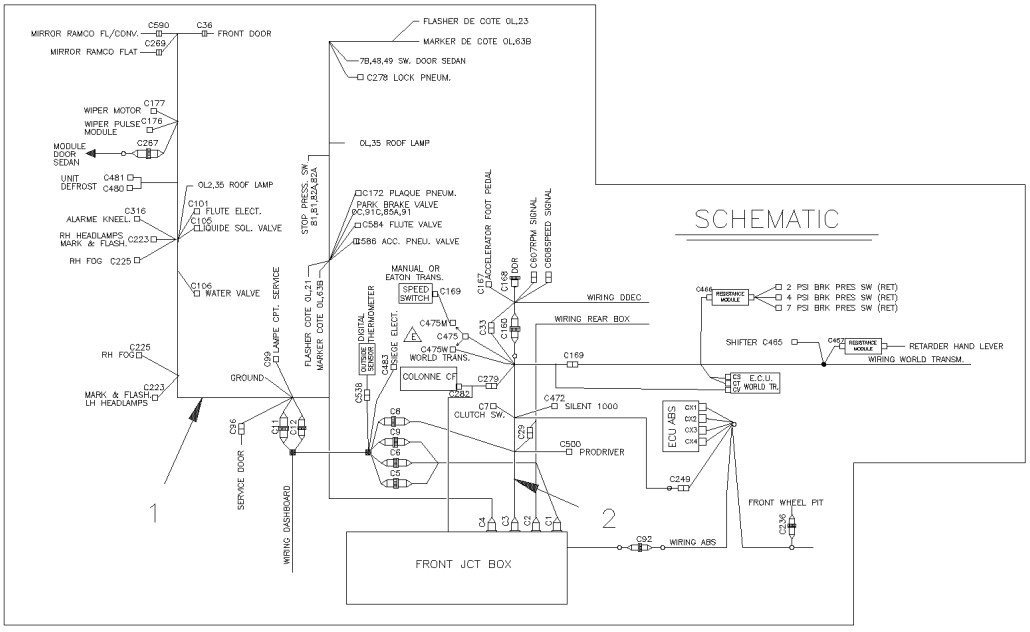
SCHEMATIC
MIRROR RAMCO FL/CONV.
MIRROR RAMCO FLAT
FRONT DOOR
WIPER MOTOR
WIPER PULSE MODULE
MODULE DOOR SEDAN
UNIT DEFROST
ALARME KNEEL.
RH HEADLAMPS MARK & FLASH.
RH FOG
WATER VALVE
RH FOG
MARK & FLASH LH HEADLAMPS
GROUND
FLUTE ELECT.
GUIDE SOL. VALVE
OL2.35 ROOF LAMP
FLASHER DE COTE OL.23
MARKER DE COTE OL.63B
7B,48,49 SW. DOOR SEDAN
C278 LOCK PNEUM.
OL.35 ROOF LAMP
C172 PLAQUE PNEUM.
PARK. BRAKE VALVE
C584 FLUTE VALVE
C586 ACC. PNEU. VALVE
MANUAL OR EATON TRANS.
SPEED SWITCH
C475M
C475
C475W
WORLD TRANS.
COLONNE CP.
C279
C282
C472
SILENT 1000
CLUTCH SW.
C500
PRODRIVER
ECU ABS
C249
FRONT WHEEL PIT
C92
WIRING ABS
FRONT JCT BOX
WIRING DDEC
WIRING REAR BOX
SHIFTER C465
RETARDER HAND LEVER
WIRING WORLD TRANSM.
E.C.U. WORLD TR.
2 PSI BRK PRES SW (RET)
4 PSI BRK PRES SW (RET)
7 PSI BRK PRES SW (RET)
SERVICE DOOR
WIRING DASHBOARD
1
2

From Y-7046 To 6-8906		Date:07/2024	PAGE:Y2-0640-00

CABLE & HARNESS - FRONT END INSTALLATION - BUS

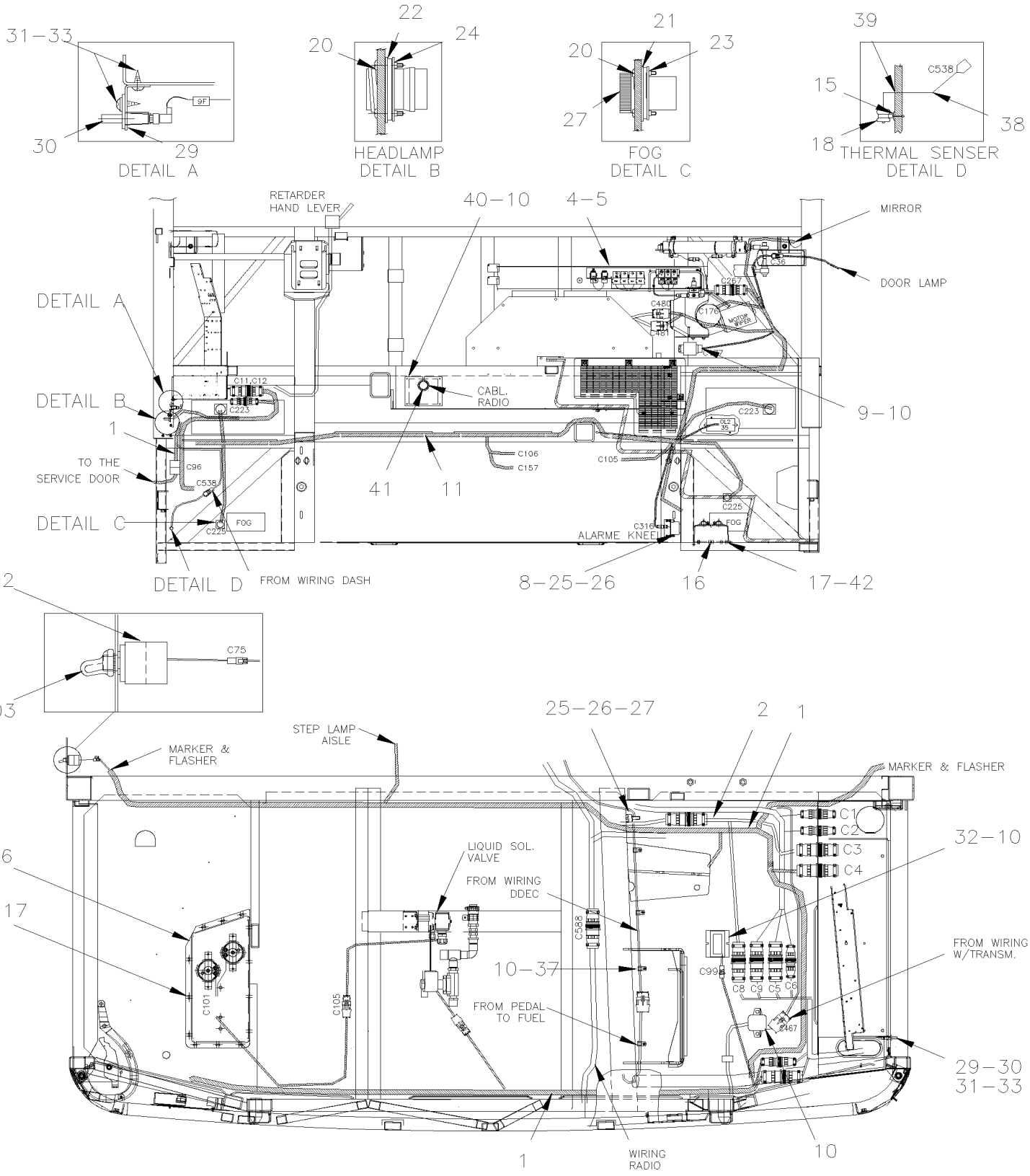

From Y-7046 To 6-8906		Date:07/2024	PAGE:Y2-0640-00

CABLE & HARNESS - FRONT END INSTALLATION - BUS

Item#	Part	Description	XLII 45	XLII MTH40	XLII MTH45	XLII MTH45E	NOTES
1	065110	CABLE ASSY / FRONT LOWER END To Y-7310	1				
1	065346	CABLE ASSY / FRONT LOWER END From Y-7311 To Y-7524	1				
1	065379	CABLE ASSY / FRONT LOWER END From Y-7525 To 2-7764	1				
1	065562	CABLE ASSY / FRONT LOWER END From 2-7765 To 3-8077	1				
1	065742	CABLE ASSY / FRONT LOWER END From 3-8078 To 5-8358	1				
1	065718	CABLE ASSY / FRONT LOWER END From 5-8359 To 5-8469	1				
1	066097	CABLE ASSY / FRONT LOWER END From 5-8470	1				
2	064777	CABLE, FRONT INTERFACE To Y-7310	1				
2	065348	CABLE, FRONT INTERFACE From Y-7311 To Y-7524	1				
2	065448	CABLE, FRONT INTERFACE From Y-7525 To 2-7823	1				
2	065596	CABLE, FRONT INTERFACE From 2-7824 To 5-8358	1				
2	065860	CABLE, FRONT INTERFACE From 5-8359	1				
3	**Y2-1250-00**	**ANTI-LOCK BRAKING SYSTEM**					
4	**Y2-1802-00**	**ENTRANCE DOOR CONTROL**					
5	064094	FIRE & KNEELING / ALARM ASSY / SERVICE	1				
8	500588	SCREW CAP HEX M4-0.7x20 G8.8 Z050	2				
9	800293	GENERATOR, PULSE / FOR WIPER MOTOR	AR				
10	**Y2-0750-00**	**AUTOMATIC TRANSMISSION - "WORLD" WITH DETROIT S-60**					
11	504637	CABLE TIE / 3/16" x 13"	25				
14	504347	RIVET POP DOME OE 3/16x1/4 AL	3				
15	500952	SCREW TP BDG PH #8x1/2 SS	1				
16	**Y2-2310-00**	**HORN - INSTALLATION**					
17	500964	WASHER FL .203x.500x.047 Z050	13				
18	952625	CLAMP / 3/8" I.D.	1				
19	**Y2-1630-00**	**FRONT KNEELING - CONTROL PANEL**					
20	5001454	SCREW MA BDG PH #4-40x1/2 SS	16				
21	562945	GASKET MOUNTING / HD10 SERIES / 3C / DEUTSCH HD10-3-GKT	2				
22	562946	GASKET MOUNTING / HD10 SERIES / 5C / DEUTSCH HD10-5-GKT	2				
23	062268	NUT, RING #11 / .940" I.D. W/4 4-40	2				
24	561820	NUT, RING #13 / 1.125" I.D. W/4 4-40	2				
25	502524	NUT HEX M4-0.7 Z050	2				
26	502636	WASHER LO SPT 4.1x7.6x0.9 Z050	2				
27	562904	PROTECTIVE CAP / HD10 SERIES / 3C / DEUTSCH HDC16-3	2				
29	064434	SUPPORT / LIGHT SWITCH	1				
30	562303	SWITCH / S.P.S.T. / N.C. To 5-8788	1				
30	563464	SWITCH / S.P.S.T. / N.C. / W/RUBBER BOOT From 5-8789	1				
31	500022	WASHER LO INT .168x.340x.023 Z050	2				
32	**Y2-0655-00**	**INTERIOR LIGHTING**					
32	**Y2-0665-10**	**SWITCHES, LIGHTS, AJAR - UNDER FLOOR**					
33	500657	SCREW TC TR PH #10-24x1/2 Z050	3				
37	952625	CLAMP / 3/8" I.D.	4				
38	562636	SENSOR / PASSENGER'S TEMP. CONTROL To 1-7493	1				

From Y-7046 To 6-8906		Date:07/2024	PAGE:Y2-0640-00

CABLE & HARNESS - FRONT END INSTALLATION - BUS

Item#	Part	Description	XLII 45	XLII MTH40	XLII MTH45	XLII MTH45E	NOTES
38	563066	SENSOR THERMISTOR ASSY ("DALLAS") From 1-7494	1				
39	682176	SEALANT SIKA #221 / BLACK / 310ml CARTRIDGE	AR				
40	065209	PLATE, CLOSING	1				
41	504398	GROMMET / 1.000x1.375x.062x.437x1.750	1				
42	500658	SCREW TC PAN PH #10-24x3/4 Z050	13				
45	504013	TIE MOUNT / 1/4" X 1/4" I.D.	1				
200	500518	SCREW MA BDG PH #4-40x1/2 Z050	4				
201	561821	NUT, RING #17 & 20 / 1.500" I.D W/4 4-40	1				
202	563047	SWITCH ASSY / WATERPROOF	1				
203	560241	RUBBER PROTECTOR, TOGGLE SWITCH	1				
204	500476	WASHER LO SPT .317x.586x.078 Z050	1				
205	502790	SCREW CAP HEX M8-1.25x20 G8.8 Z050	1				
206	502573	WASHER FL 6.4x12.5x1.6 SS	2				
207	500609	NUT HEX M6-1.0 Z050	2				

From Y-7046 To 7-9095		Date:07/2024	PAGE:Y2-0640-50

CABLE & HARNESS - FRONT END INSTALLATION - MTH

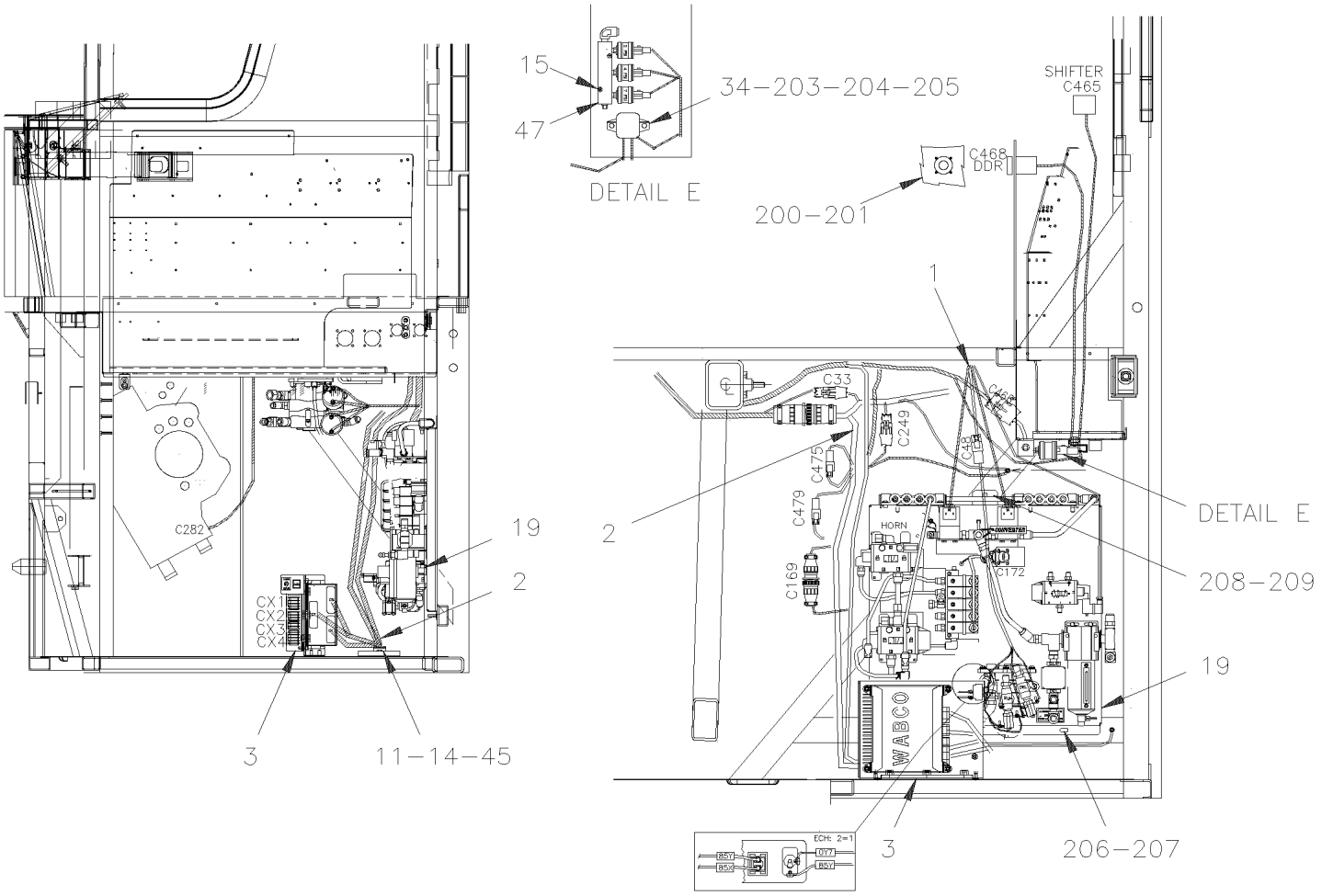

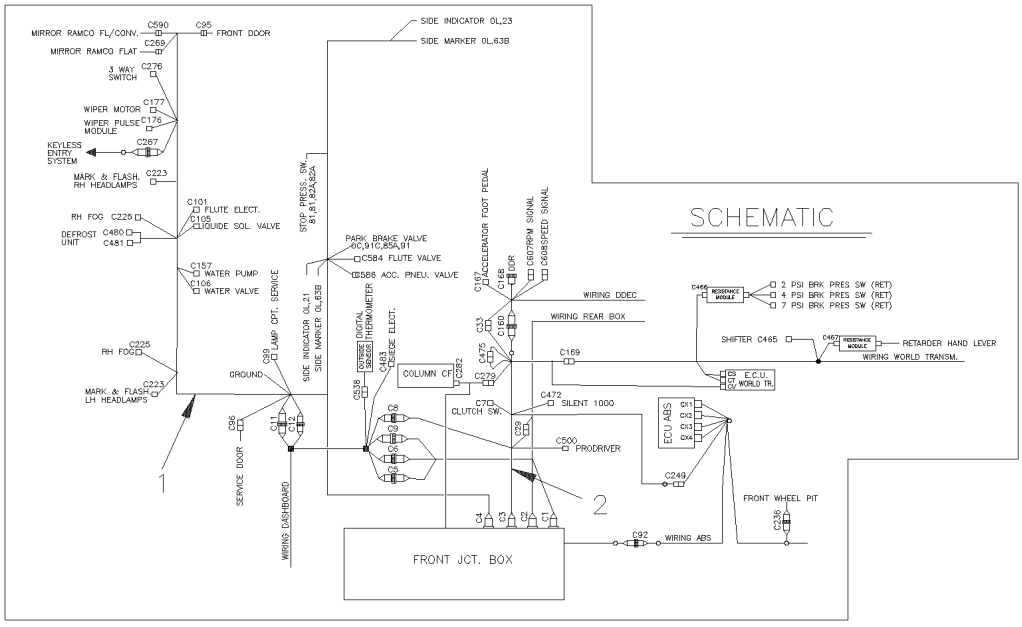

From Y-7046 To 7-9095		Date:07/2024	PAGE:Y2-0640-50

CABLE & HARNESS - FRONT END INSTALLATION - MTH

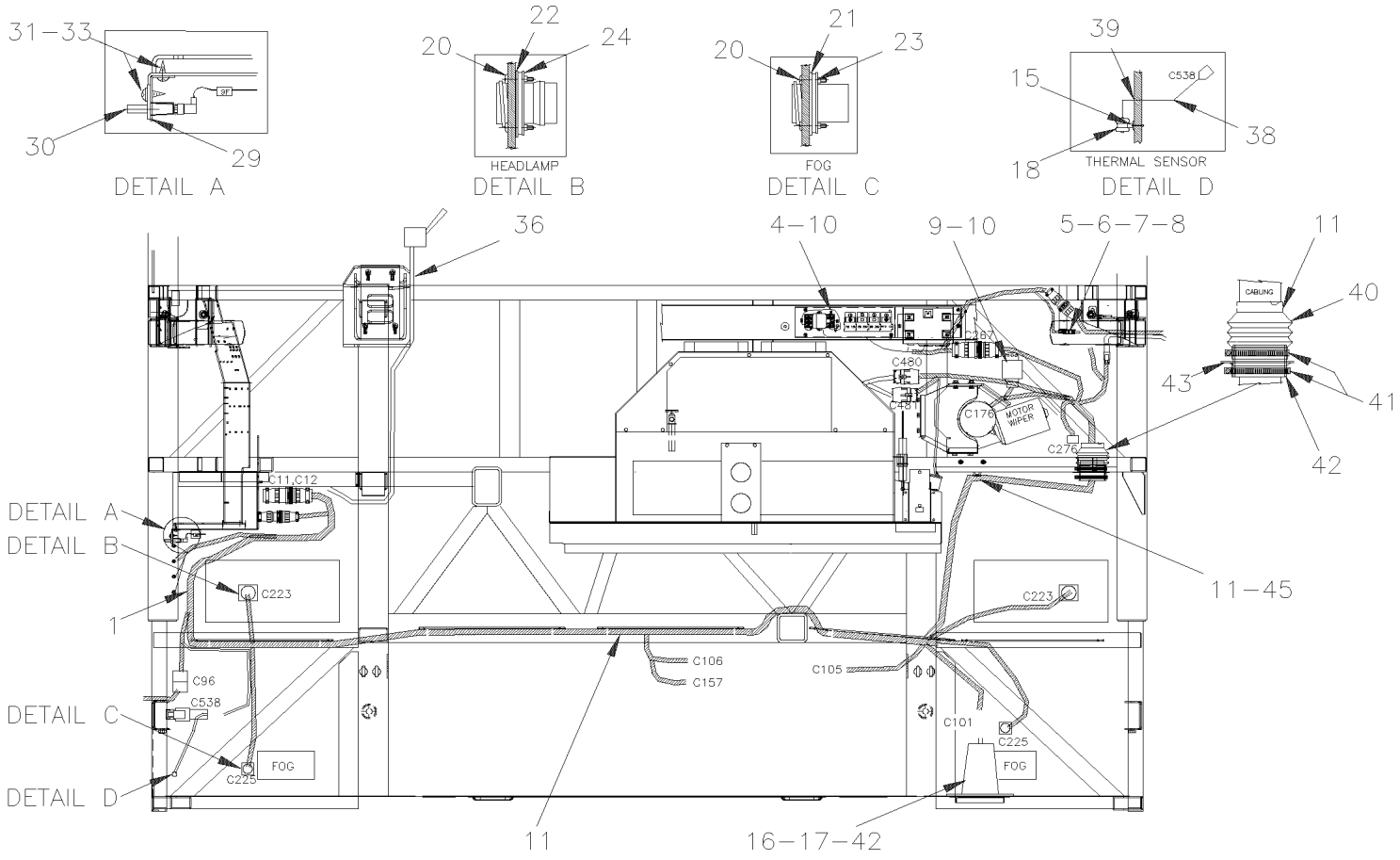

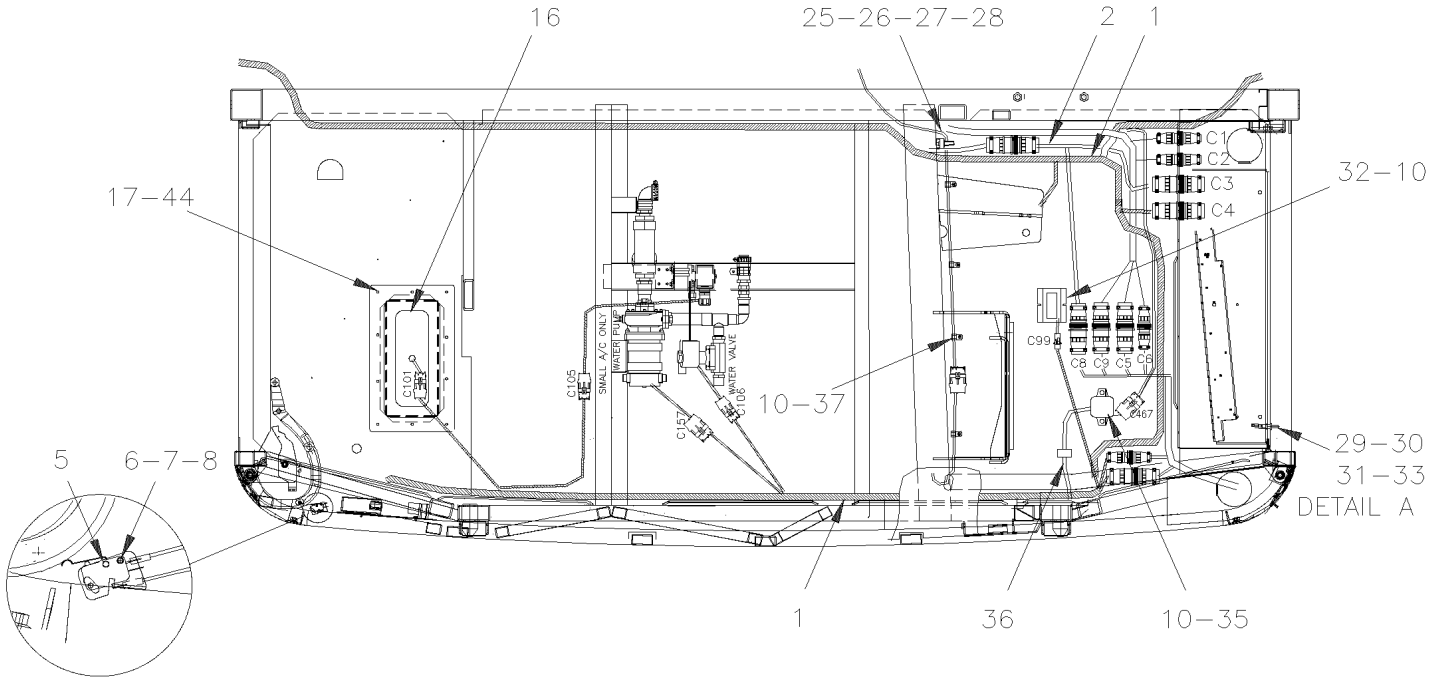

From Y-7046 To 7-9095		Date:07/2024	PAGE:Y2-0640-50

CABLE & HARNESS - FRONT END INSTALLATION - MTH

Item#	Part	Description	XLII 45	XLII MTH40	XLII MTH45	XLII MTH45E	NOTES
1	064779	CABLE ASSY / FRONT LOWER END To Y-7493		1	1	1	
1	065439	CABLE ASSY / FRONT LOWER END From Y-7494 To 2-7764		1	1	1	
1	065564	CABLE ASSY / FRONT LOWER END From 2-7765 To 2-7799		1	1	1	
1	065550	CABLE ASSY / FRONT LOWER END From 2-7800 To 3-7957		1	1	1	
1	065783	CABLE ASSY / FRONT LOWER END From 3-7958 To 4-8379		1	1	1	
1	065715	CABLE ASSY / FRONT LOWER END From 5-8380 To 5-8469		1	1	1	
1	066099	CABLE ASSY / FRONT LOWER END From 5-8470		1	1	1	
2	064777	CABLE, FRONT INTERFACE To Y-7310		1	1	1	
2	065348	CABLE, FRONT INTERFACE From Y-7311 To Y-7531		1	1	1	
2	065448	CABLE, FRONT INTERFACE From Y-7532 To 2-7823		1	1	1	
2	065596	CABLE, FRONT INTERFACE From 2-7824 To 4-8358		1	1	1	
2	065860	CABLE, FRONT INTERFACE From 5-8359		1	1	1	
3	**Y2-1250-00**	**ANTI-LOCK BRAKING SYSTEM**					
4	**Y2-0650-50**	**KEYLESS MODULE**					
5	562096	MICRO SWITCH		1	1	1	
6	502577	SCREW MA PAN PH M3-0.5x16 ZP		2	2	2	
7	502579	NUT HEX M3-0.5 NP		2	2	2	
8	5001407	WASHER LO EXT 3.2x6.0x0.4 SS		2	2	2	
9	800293	GENERATOR, PULSE / FOR WIPER MOTOR		1	1	1	
10	500638	SCREW TP PAN PH #8x1/2 Z050		6	6	6	
11	504637	CABLE TIE / 3/16" x 13"		25	25	25	
15	500952	SCREW TP BDG PH #8x1/2 SS		1	1	1	
16	**Y2-2310-00**	**HORN - INSTALLATION**					
17	500658	SCREW TC PAN PH #10-24x3/4 Z050		10	10	10	
18	952625	CLAMP / 3/8" I.D.		1	1	1	
19	**Y2-1640-51**	**LEVEL-LOW - CONTROL PANEL & VALVES**					
20	5001454	SCREW MA BDG PH #4-40x1/2 SS		16	16	16	
21	562945	GASKET MOUNTING / HD10 SERIES / 3C / DEUTSCH HD10-3-GKT		2	2	2	
22	562946	GASKET MOUNTING / HD10 SERIES / 5C / DEUTSCH HD10-5-GKT		2	2	2	
23	062268	NUT, RING #11 / .940" I.D. W/4 4-40		2	2	2	
24	561820	NUT, RING #13 / 1.125" I.D. W/4 4-40		2	2	2	
25	560422	BLOCK, TERMINAL / 1 STUD 3/8-16 / BLACK		1	1	1	
26	500641	SCREW TP PAN PH #8x3/4 Z050		2	2	2	
27	502616	WASHER LO SPT 10.2x18.1x2.2 SS		1	1	1	
28	500102	NUT HEX 3/8-16 SS		1	1	1	
29	064434	SUPPORT / LIGHT SWITCH		1	1	1	
30	562303	SWITCH / S.P.S.T. / N.C. To 5-8788		1	1	1	
30	563464	SWITCH / S.P.S.T. / N.C. / W/RUBBER BOOT From 5-8789		1	1	1	
31	500022	WASHER LO INT .168x.340x.023 Z050		2	2	2	
32	**Y2-0665-10**	**SWITCHES, LIGHTS, AJAR - UNDER FLOOR**					
33	500657	SCREW TC TR PH #10-24x1/2 Z050		3	3	3	
34	562381	RESISTANCE MODULE		1	1	1	

From Y-7046 To 7-9095		Date:07/2024	PAGE:Y2-0640-50

CABLE & HARNESS - FRONT END INSTALLATION - MTH

Item#	Part	Description	XLII 45	XLII MTH40	XLII MTH45	XLII MTH45E	NOTES
35	562357	RESISTANCE MODULE		1	1	1	
36	063782	CABLE ASSY / RESISTANCE MODULE & SWITCH		1	1	1	
37	952625	CLAMP / 3/8" I.D.		4	4	4	
38	562636	SENSOR / PASSENGER'S TEMP. CONTROL To 1-7493		1	1	1	
38	563066	SENSOR THERMISTOR ASSY ("DALLAS") From 1-7494		1	1	1	
39	682176	SEALANT SIKA #221 / BLACK / 310ml CARTRIDGE		AR	AR	AR	
40	504533	CUFF END BELLOW / 2 3/8" I.D. x 2 3/8" x 4"		1	1	1	
41	504024	HOSE CLAMP / 1"13/16"-2"3/4 SS / HS-36		2	2	2	
42	380692	TUBE ABS		1	1	1	
43	680067	SEALANT TAPE BUTYL / BLACK / 1/8"x3/4"x25' / 75211E760		AR	AR	AR	
44	500989	WASHER FL .219x.875x.062 Z050		10	10	10	
45	504013	TIE MOUNT / 1/4" X 1/4" I.D.		1	1	1	
47	**Y2-0750-00**	**AUTOMATIC TRANSMISSION - "WORLD" WITH DETROIT S-60**					
200	500518	SCREW MA BDG PH #4-40x1/2 Z050		4	4	4	
201	561821	NUT, RING #17 & 20 / 1.500" I.D W/4 4-40		1	1	1	
203	502564	WASHER LO SPT 6.1x11.8x1.6 Z050		2	2	2	
204	502737	SCREW CAP HEX M6-1.0x25 SS BK		2	2	2	
205	502511	NUT HEX NYRT M6-1.0 Z050		2	2	2	
206	502573	WASHER FL 6.4x12.5x1.6 SS		3	3	3	
207	500609	NUT HEX M6-1.0 Z050		3	3	3	
208	500476	WASHER LO SPT .317x.586x.078 Z050		3	3	3	
209	502790	SCREW CAP HEX M8-1.25x20 G8.8 Z050		7	7	7	

From 7-9096 To 8-9339		Date:07/2024	PAGE:Y2-0640-51

CABLE & HARNESS - FRONT END INSTALLATION - MTH / MUX // D061083

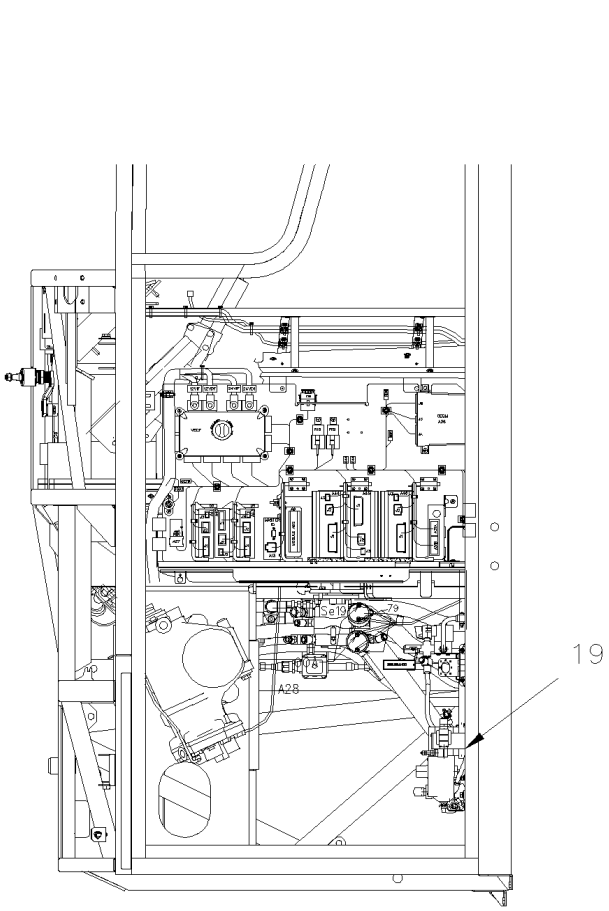

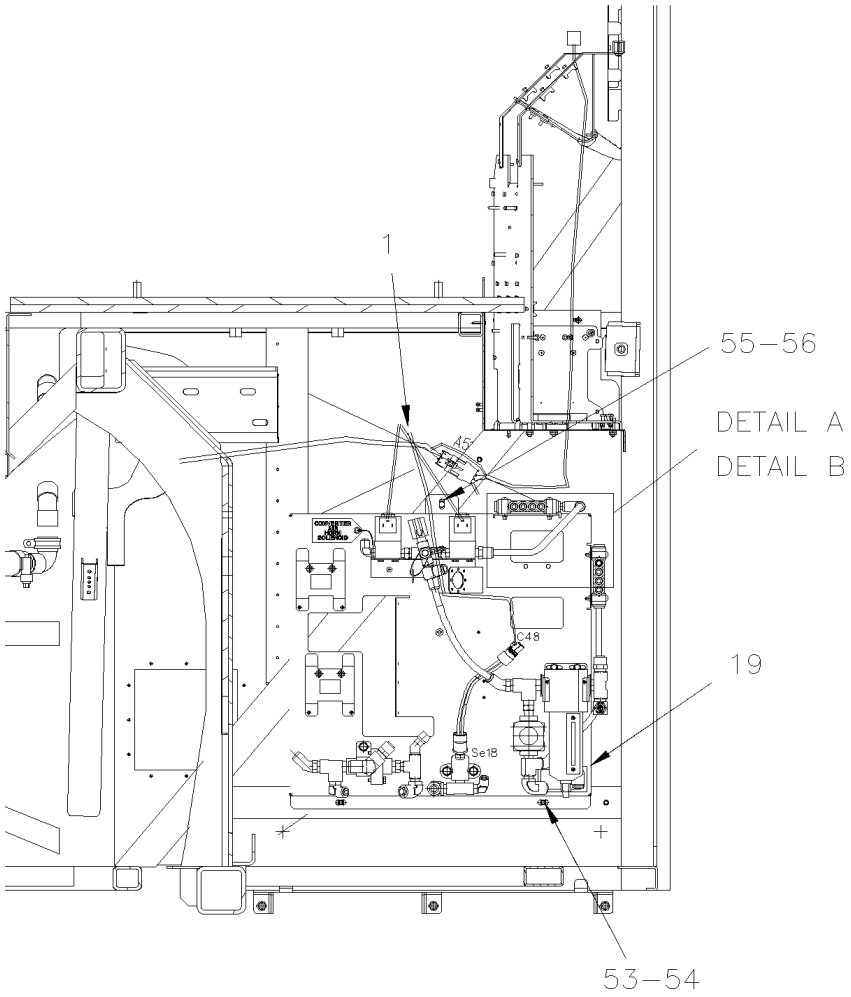

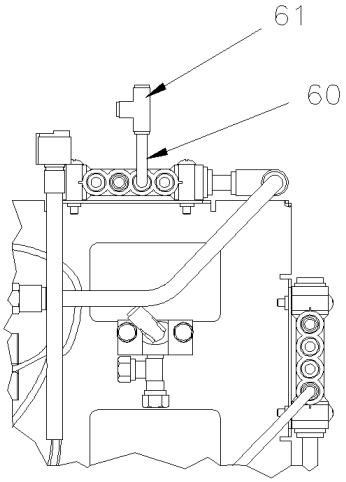

DETAIL A

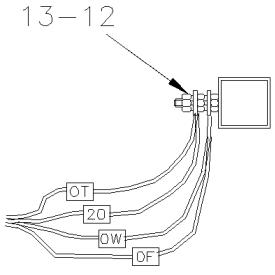

DETAIL B

From 7-9096 To 8-9339		Date:07/2024	PAGE:Y2-0640-51

CABLE & HARNESS - FRONT END INSTALLATION - MTH / MUX // D061083

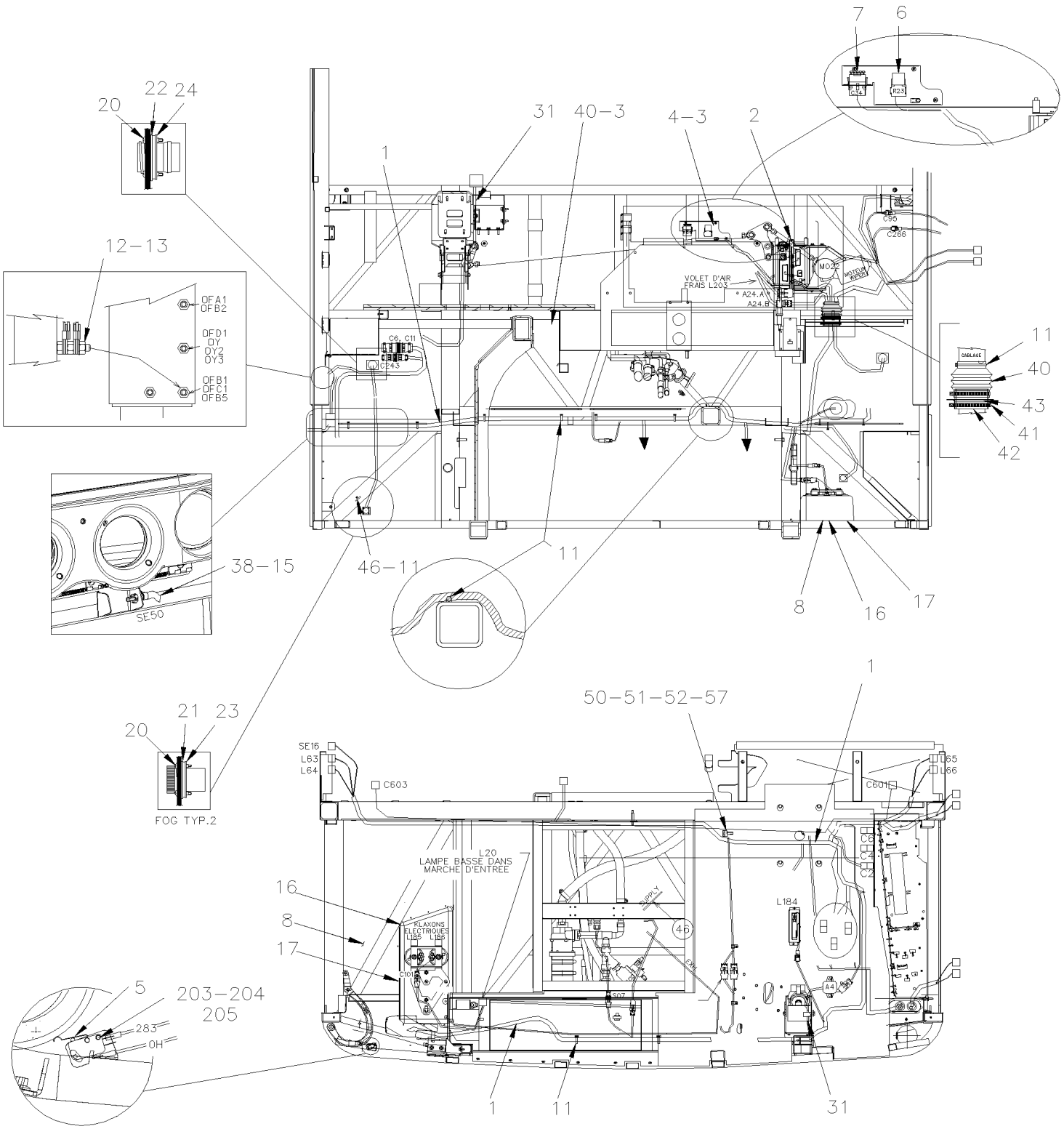

From 7-9096 To 8-9339		Date:07/2024	PAGE:Y2-0640-51

CABLE & HARNESS - FRONT END INSTALLATION - MTH / MUX // D061083

Item#	Part	Description	XLII 45	XLII MTH40	XLII MTH45	XLII MTH45E	NOTES
1	066773	CABLE ASSY / FRONT LOWER END / MUX			1	1	
2	Call order desk	I/O B-MODULE VOLVO MULTIPLEX ASSY			1	1	P
3	500638	SCREW TP PAN PH #8x1/2 Z050			3	3	
4	288821	SUPPORT & RELAY ASSY			1	1	
5	562096	MICRO SWITCH			1	1	
6	563332	RELAY 24V S.P.D.T. W/RESISTOR / "VOLVO" (20374662)			1	1	
7	381145	DIODE ASSY / W/5 3AMPS			1	1	
8	5001407	WASHER LO EXT 3.2x6.0x0.4 SS			2	2	
11	504637	CABLE TIE / 3/16" x 13"			AR	AR	
12	502565	NUT HEX M6-1.0 SS			15	15	
13	502570	WASHER LO SPT 6.1x11.8x1.6 SS			8	8	
14	500167	SCREW CAP HEX 1/4-20x1 1/4 G5 PT Z050			3	3	
15	502716	NUT HEX NYRT 1/4-20			3	3	
16	562387	CONVOLUTED TUBING / SLIT / BLACK / .250"			AR	AR	
17	**Y2-2310-00**	**HORN - INSTALLATION**					
18	500658	SCREW TC PAN PH #10-24x3/4 Z050			10	10	
19	**Y2-1640-52**	**LEVEL-LOW - CONTROL PANEL & VALVES**					
20	5001454	SCREW MA BDG PH #4-40x1/2 SS			16	16	
21	562945	GASKET MOUNTING / HD10 SERIES / 3C / DEUTSCH HD10-3-GKT			2	2	
22	563096	GASKET MOUNTING / HD10 SERIES / 6C / DEUTSCH HD10-6-GKT			2	2	
23	562381	RESISTANCE MODULE			1	1	
24	062268	NUT, RING #11 / .940" I.D. W/4 4-40			2	2	
25	500642	SCREW TP PAN PH #10x3/4 Z050			4	4	
26	561821	NUT, RING #17 & 20 / 1.500" I.D W/4 4-40			2	2	
30	562357	RESISTANCE MODULE			1	1	
31	063782	CABLE ASSY / RESISTANCE MODULE & SWITCH			1	1	
34	500411	WASHER FL .260x.697x.050 SS			6	6	
38	563335	SENSOR THERMISTOR ASSY / OUTSIDE / / PED 15416387			1	1	
40	504499	CUFF END BELLOW / 2 7/8" I.D. x 3 5/8" x 4 7/16			1	1	
41	504026	HOSE CLAMP / 2"13/16-3"3/4 SS / HS-52			2	2	
42	065035	TUBE PVC / 3" X 50MM			1	1	
43	680067	SEALANT TAPE BUTYL / BLACK / 1/8"x3/4"x25' / 75211E760			1	1	
46	562679	4 WAY ADH. BACKED MOUNTS 1.000 x 1.000 x .160			1	1	
50	500102	NUT HEX 3/8-16 SS			1	1	
51	502616	WASHER LO SPT 10.2x18.1x2.2 SS			1	1	
52	500641	SCREW TP PAN PH #8x3/4 Z050			2	2	
53	502573	WASHER FL 6.4x12.5x1.6 SS			1	1	
54	502854	NUT HEX M6-1.0 N500			2	2	
55	500942	WASHER LO SPT 8.1x14.8x2.0 N500			1	1	
56	502862	SCREW CAP HEX M8-1.25x20 G8.8 N500			1	1	
57	560422	BLOCK, TERMINAL / 1 STUD 3/8-16 / BLACK			1	1	
58	952624	CLAMP / 1/4" I.D.			1	1	

From 7-9096 To 8-9339		Date:07/2024	PAGE:Y2-0640-51

CABLE & HARNESS - FRONT END INSTALLATION - MTH / MUX // D061083

Item#	Part	Description	XLII 45	XLII MTH40	XLII MTH45	XLII MTH45E	NOTES
59	684685	ADHESIVE SIMSON #ISR 70-03 / 310ml CARTRIDGE			AR	AR	
60	503402	TUBE, NYLON 1/4 O.D. / BLACK S.L.			AR	AR	
61	641955	UNION TEE / PUSH-IN FITTING / #4x#4x#4 BR			1	1	
62	502526	SCREW TC BDG PH #12-24x3/4 Z050			10	10	
		P) CALL ORDER DESK FOR SPECIFIC APPLICATION (V.I.N.)					

From Y-7046 To 6-8906		Date:07/2024	PAGE:Y2-0640-80
CABLE & HARNESS - W.C.L.			

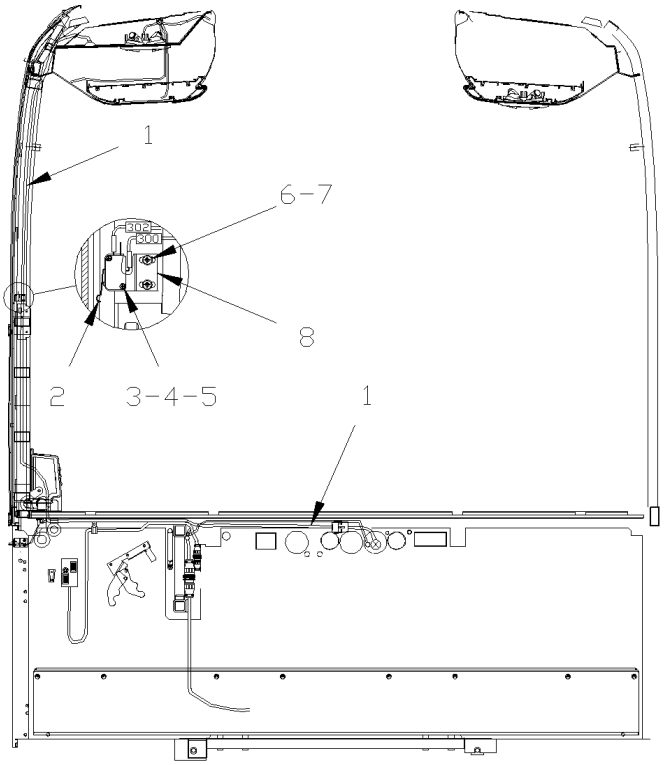

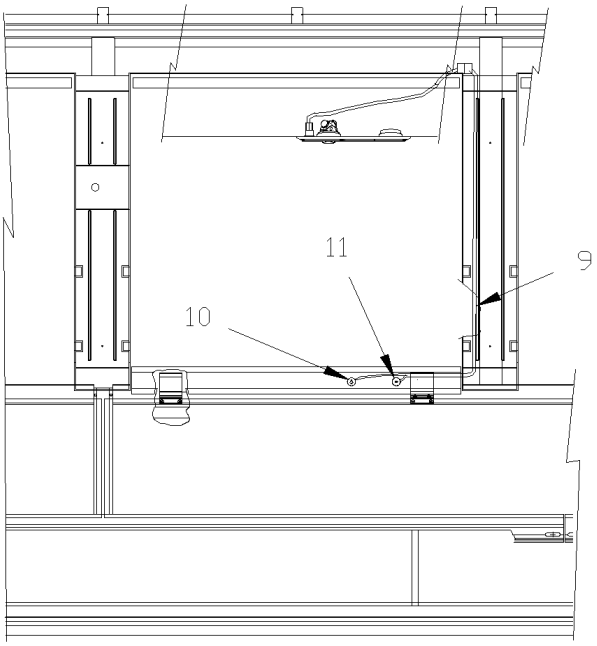

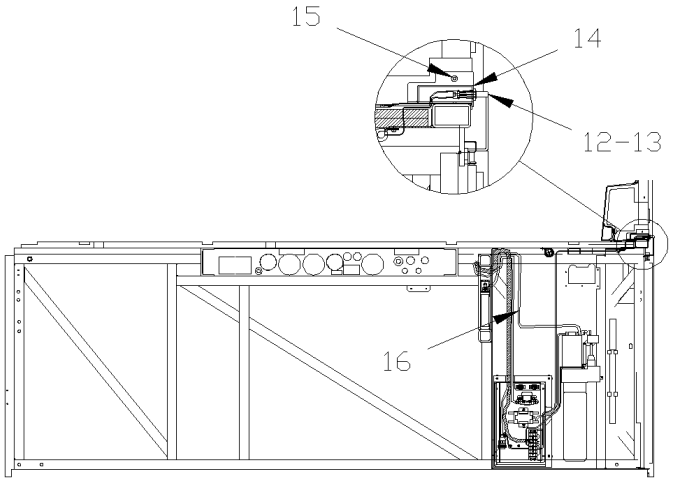

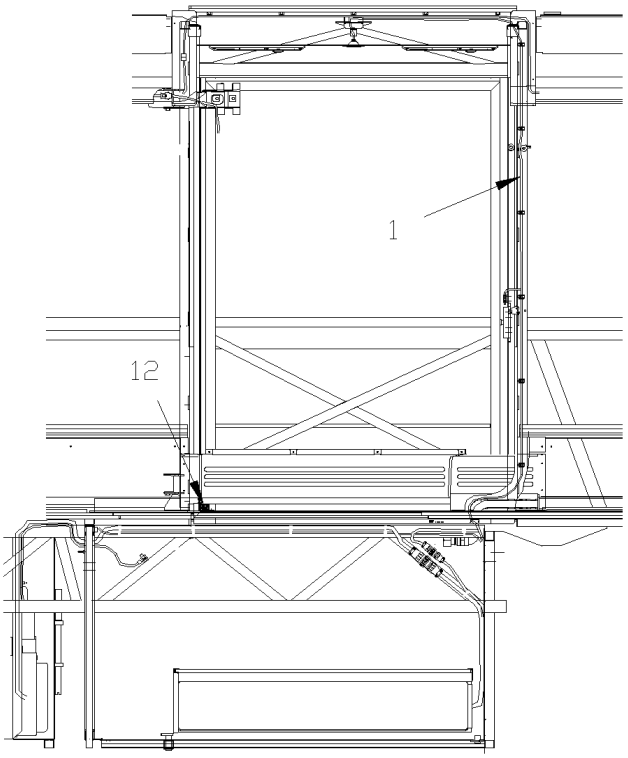

WCL DOOR INTERIOR VIEW

From Y-7046 To 6-8906		Date:07/2024	PAGE:Y2-0640-80

CABLE & HARNESS - W.C.L.

Item#	Part	Description	XLII 45	XLII MTH40	XLII MTH45	XLII MTH45E	NOTES
1	065344	CABLE ASSY / W.C.L. ACCESSORIES DOOR To 4-8278	1				
1	065916	CABLE ASSY / W.C.L. ACCESSORIES DOOR From 4-8279	1				
NS	504264	GROMMET / .750x1.250x.062x.250x1.625	1				
2	502096	PIN, COTTER 1/16 x 1 ZP	1				
3	502519	SCREW MA FL SLT #4-40x5/8 Z050	2				
4	502520	NUT HEX #4-40 Z050	2				
5	5001407	WASHER LO EXT 3.2x6.0x0.4 SS	2				
6	5001491	SCREW TC PAN PH #8-32x3/4 SS	2				
7	500581	WASHER LO SPT .141x.250x.031 SS	2				
8	065388	SUPPORT / SWITCH	1				
9	065369	CABLE HARNESS / READING LIGHT CURBSIDE DOOR / W/W.C.L.	1				
10	830159	SWITCH / OFF-M/ON / S.P.S.T. / CHIME	1				WCL
11	830158	SWITCH / OFF-ON / S.P.S.T. / READING LIGHT	1				WCL
NS	409259	PROTECTOR SWITCH / CAP	2				
. NS	288728	. REINFORCMENT FOR SCREW PROTECTOR CAP	1				
NS	500814	SCREW TP BDG PH #6x3/4 BK	4				
12	562303	SWITCH / S.P.S.T. / N.C. To 5-8788	1				
12	563464	SWITCH / S.P.S.T. / N.C. / W/RUBBER BOOT From 5-8789	1				
13	500148	SCREW MA RND PH #6-32x1/2 SS	1				
NS	500553	NUT HEX #6-32 SS	1				
NS	502649	WASHER LO EXT .141x.320x.022 Z050	1				
14	065444	SWITCH SUPPORT / ENTRANCE DOOR W.C.L.	1				
15	500552	SCREW TP OV PH #6x3/4 Z050	2				
NS	500463	WASHER FN CKF .187x.500x.090 BR Z050	2				
16	065343	WIRING HARNESS INTERFACE RICON	1				
NS	504637	CABLE TIE / 3/16" x 13"	AR				
NS	504013	TIE MOUNT / 1/4" X 1/4" I.D.	AR				
NS	952639	CLAMP / 1"1/4 I.D.	AR				
NS	504536	CABLE CLIP ½" / ADHESIVE	AR				
NS	680096	SEALANT BUTYL ALUM / GREY / 310ml CARTRIDGE	AR				
NS	065342	CABLE # 0W ASSY To 4-8278	1				
		WCL) THIS SWITCH INSTALL ON LOWER WINDOW MOULDING WITH PROTECTOR # 409259 FOR IMPROVEMENT					

From Y-7046 To 6-8906		Date:07/2024	PAGE:Y2-0641-00

CABLE & HARNESS - REAR END INSTALLATION - BUS

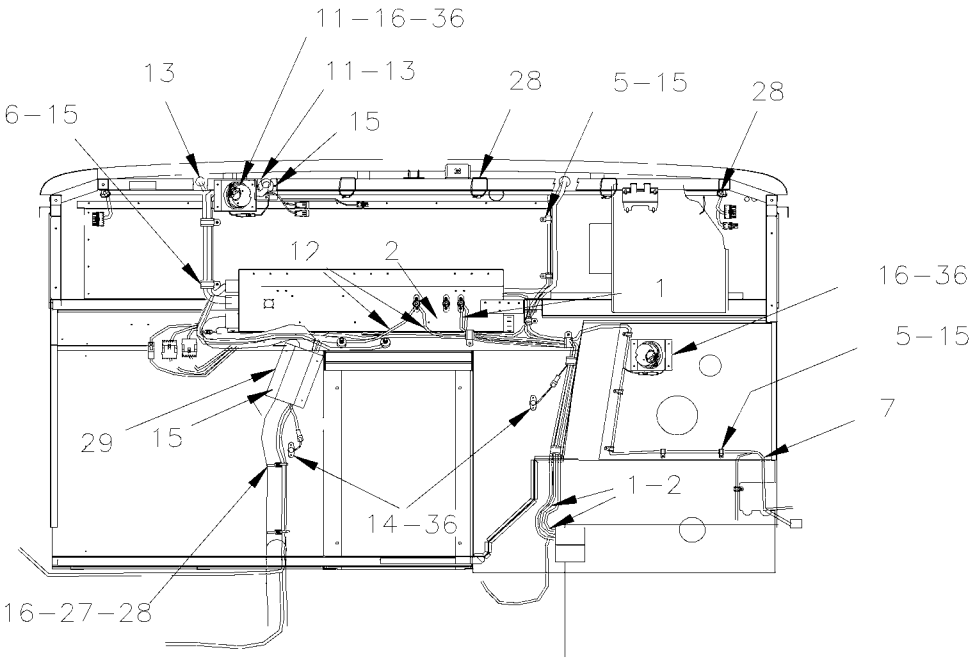

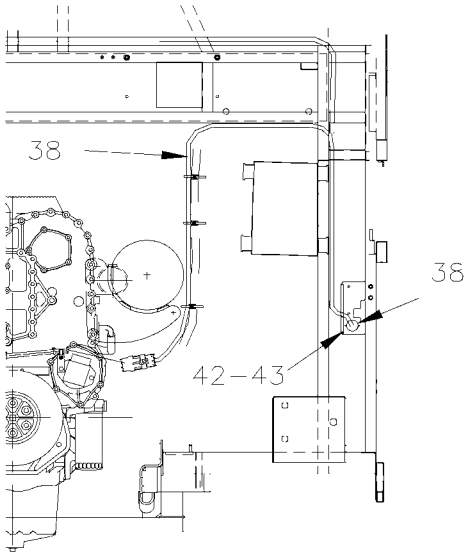

UP TO 3-8164

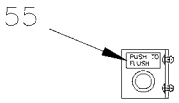

DETAIL BOUTON

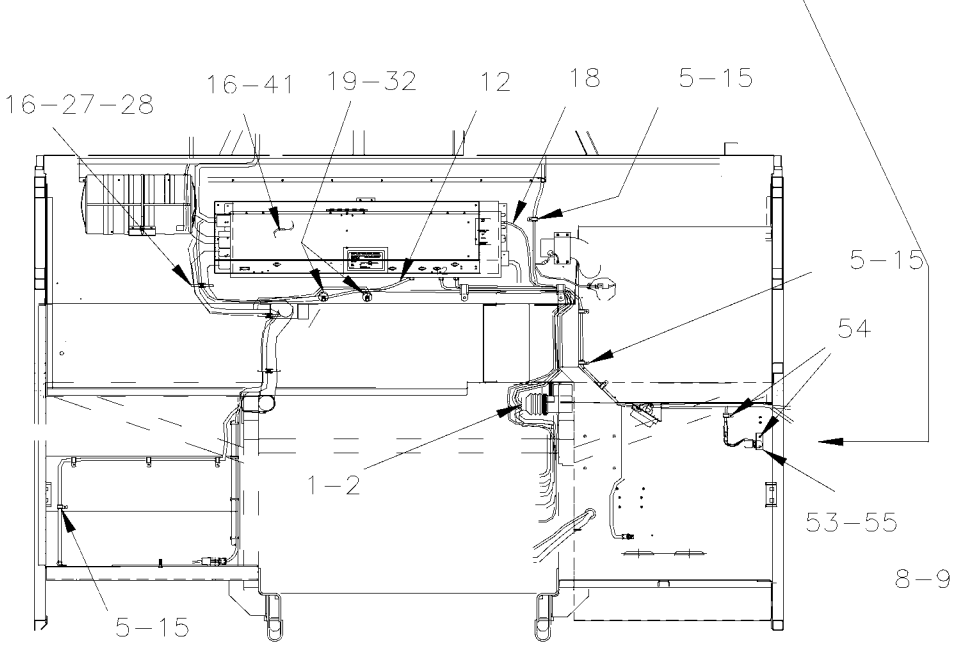

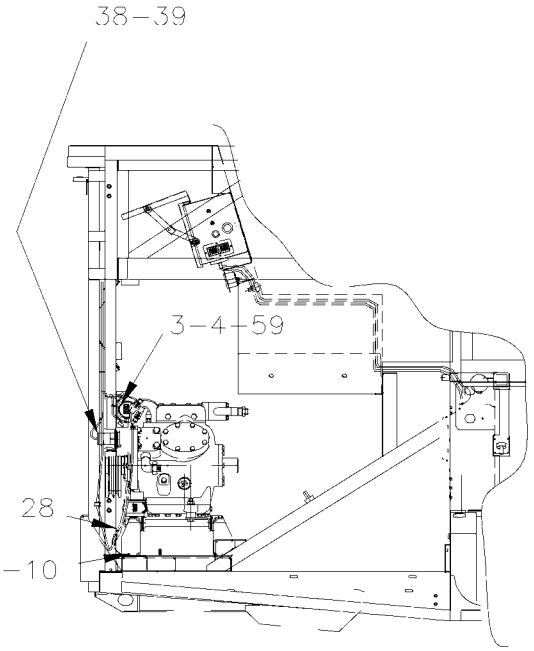

UP TO 3-8164

From Y-7046 To 6-8906		Date:07/2024	PAGE:Y2-0641-00

CABLE & HARNESS - REAR END INSTALLATION - BUS

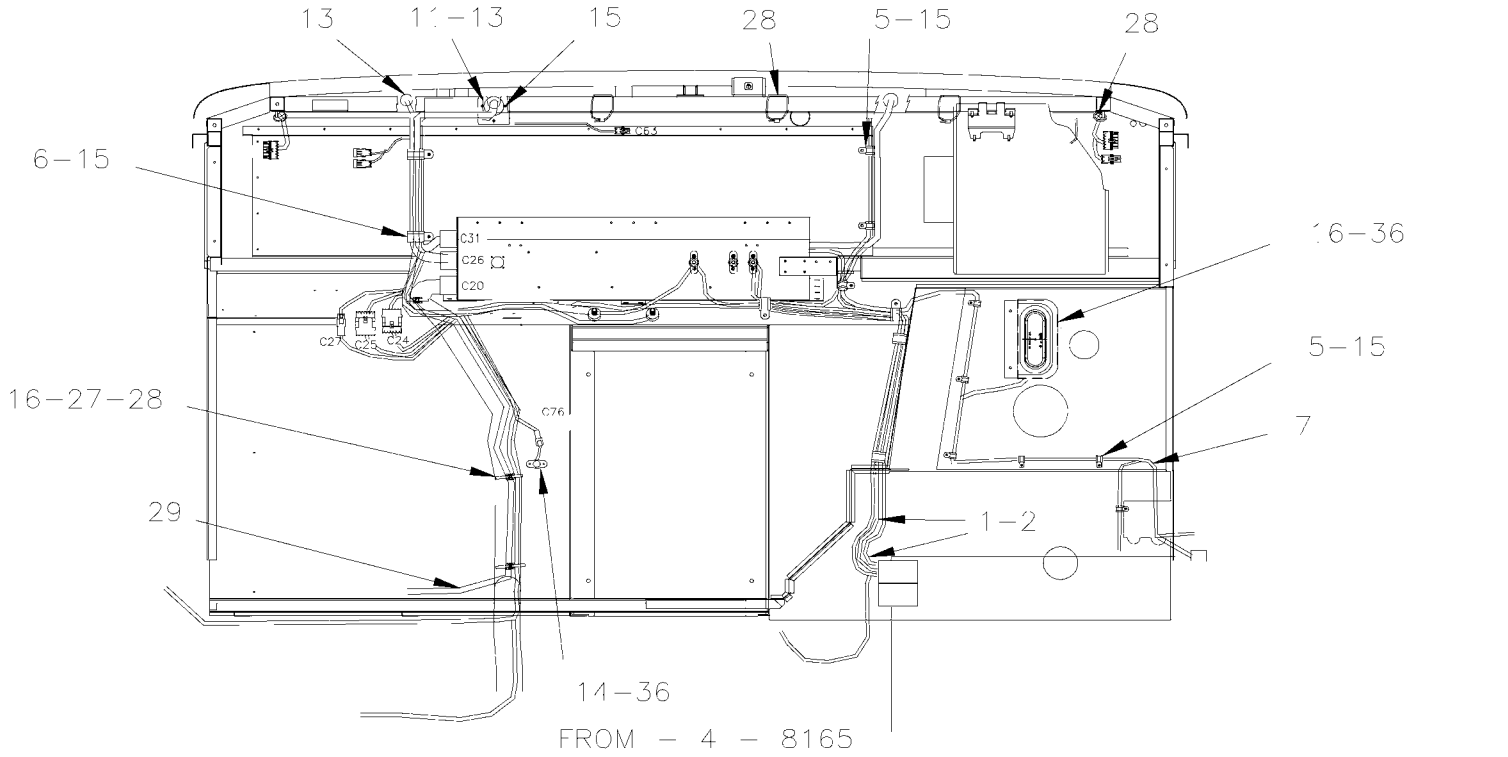

FROM - 4 - 8165

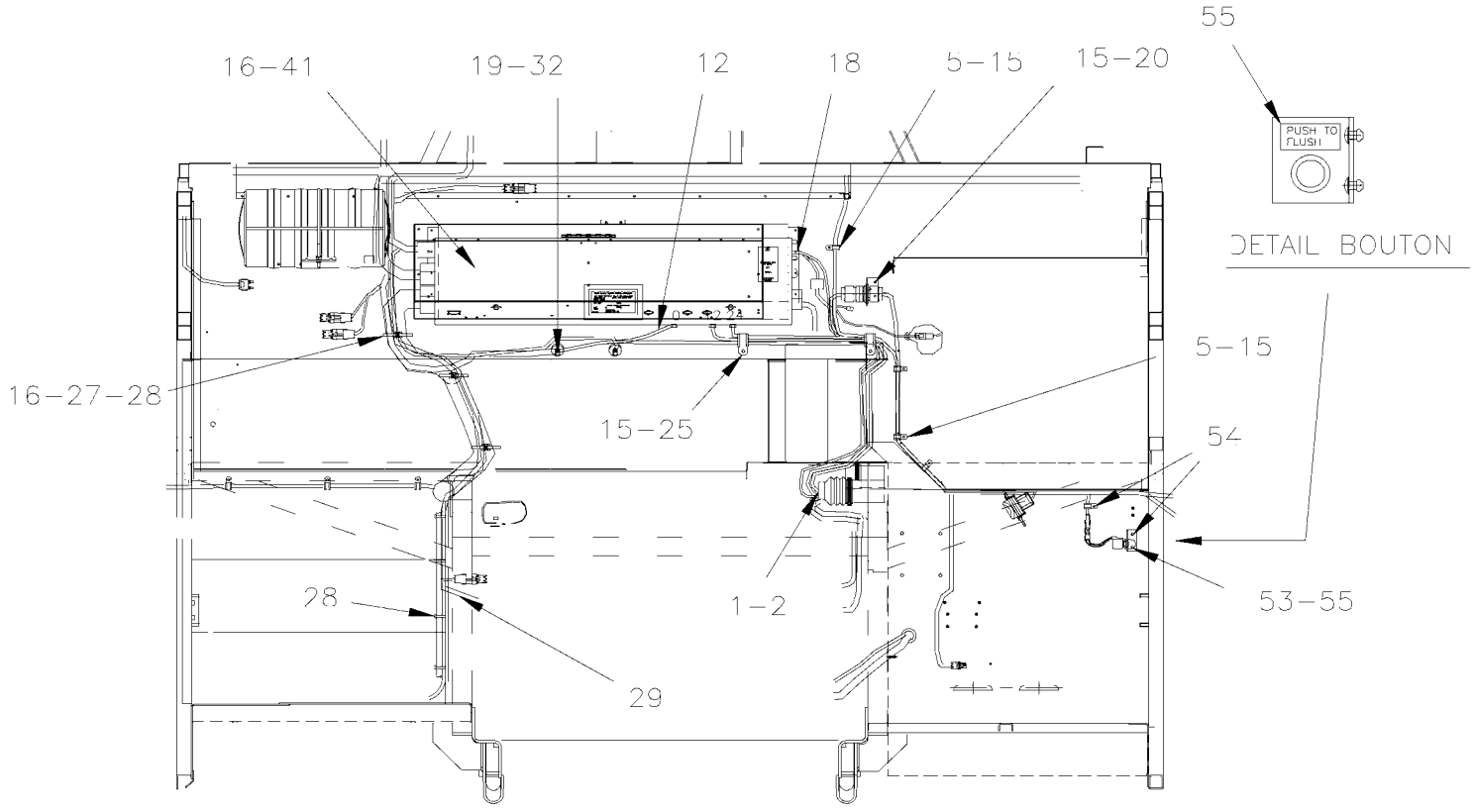

FROM - 4 - 8165

From Y-7046 To 6-8906		Date:07/2024	PAGE:Y2-0641-00

CABLE & HARNESS - REAR END INSTALLATION - BUS

Item#	Part	Description	XLII 45	XLII MTH40	XLII MTH45	XLII MTH45E	NOTES
1	063416	CABLE ASSY #24VR	1				
2	063413	CABLE ASSY # 12VR	1				
3	563199	BACK-UP ALARM "ECCO" / 12-36vdc / 107db	1				
4	5001524	WASHER FL .625x.812x.100 NYL	2				
5	952625	CLAMP / 3/8" I.D.	15				
6	952639	CLAMP / 1"1/4 I.D.	2				
7	065124	CABLE ASSY / ENGINE COMPT ACCESSORIES To Y-7229	1				
7	065286	CABLE ASSY / ENGINE COMPT ACCESSORIES From Y-7230 To 2-7764	1				
7	065571	CABLE ASSY / ENGINE COMPT ACCESSORIES From 2-7765 To 2-7842	1				
7	065665	CABLE ASSY / ENGINE COMPT ACCESSORIES From 2-7843 To 3-8020	1				
7	065469	CABLE ASSY / ENGINE COMPT ACCESSORIES From 3-8021 To 3-8057	1				
7	065827	CABLE ASSY / ENGINE COMPT ACCESSORIES From 3-8058 To 3-8164	1				
7	065767	CABLE ASSY / ENGINE COMPT ACCESSORIES From 4-8165 To 4-8379	1				
7	065975	CABLE ASSY / ENGINE COMPT ACCESSORIES From 5-8380 To 6-8758	1				
7	066567	CABLE ASSY / ENGINE COMPT ACCESSORIES From 6-8759	1				
8	500786	NUT HEX #10-24 Z050	1				
9	500470	WASHER LO SPT .193x.334x.047 Z050	1				
10	500574	SCREW MA TR PH #10-24x1 1/4 SS	1				
11	065236	CLOSING PLATE 80MM X 75.4MM	1				
12	062849	CABLE ASSY # 0-8	1				
13	680532	SEALANT SIKA #221 / GREY / 310ml CARTRIDGE	AR				
14	5001204	SCREW TP FL PH #6x1 1/4 Z050	4				
15	500244	SCREW TP BDG PH #8x3/4 N500	AR				
16	500965	SCREW TC BDG PH #8-32x1/2 N500	AR				
18	680025	CAULKING STRIP 3/16" O.D. X 14'	AR				
19	500968	NUT HEX STO 1/2-13 Z050	2				
20	382027	BRACKET CONNECTOR	1				
21	500478	WASHER LO SPT .380x.683x.094 Z050	3				
22	500379	NUT HEX 3/8-16 BR	3				
25	952635	CLAMP / 1" I.D.	AR				
27	504013	TIE MOUNT / 1/4" X 1/4" I.D.	AR				
28	504016	CABLE TIE / 5/16" X 14"1/2	AR				
29	063788	PROTECTOR CABLE / 200MM AL To 1-7657	1				
29	065566	PROTECTOR CABLE / 200MM SS From 1-7658 To 3-8164	1				
32	500482	WASHER LO SPT .506x.873x.125 Z050	2				
33	561916	NUT, SPEED	2				
36	**Y2-0665-00**	**ENGINE COMPARTMENT - ELECTRIC COMPONENTS**					
38	**Y2-0666-00**	**BLOCK HEATER RECEPTACLE**					
39	500965	SCREW TC BDG PH #8-32x1/2 N500	2				
41	**Y2-0620-00**	**REAR JUNCTION BOX ASSY**					
42	506025	RUBBER CHANNEL / 1/18" x 5/16" INT "U" SHAPE / SQUARE C.T.L.	AR				
43	680066	ADHESIVE / ADBOND #5014 / 23.6ML BOTTLE	AR				

From Y-7046 To 6-8906		Date:07/2024	PAGE:Y2-0641-00

CABLE & HARNESS - REAR END INSTALLATION - BUS

Item#	Part	Description	XLII 45	XLII MTH40	XLII MTH45	XLII MTH45E	NOTES
44	562402	DETECTOR / FIRE	1				
44	065323	KIT, FIRE DETECTOR REPLACEMENT	1				
. NS	IS-99091	. SEE INSTRUCTION SHEET	1				
48	500642	SCREW TP PAN PH #10x3/4 Z050	AR				
49	500769	NUT HEX 1/4-20 Z050	2				
53	**Y2-0665-10**	**SWITCHES, LIGHTS, AJAR - UNDER FLOOR**					
54	504117	RIVET POP DOME CLE 3/16x3/8 AL	3				
55	065466	DECAL / LAVATORY PUMP FLUSH / ENGLISH & FRANCAIS	1				
56	500539	NUT HEX NYRT M4-0.7 N500	1				
57	504357	WASHER FL .187x.437x.050 SS	2				
59	966171	NUT HEX NYRT M8x1.25 SS	2				
NS	063711	DECAL / "WELDING..." / W/SERIES 60 & "WORLD TRANSMISSION / ENGLISH	1				
NS	066046	DECAL / "WELDING..." / W/SERIES 60 & "WORLD TRANSMISSION / ENGLISH & SPANISH	1				

From Y-7046 To 6-8906		Date:07/2024	PAGE:Y2-0645-00
SWITCHES L.H. CONSOLE - BUS			

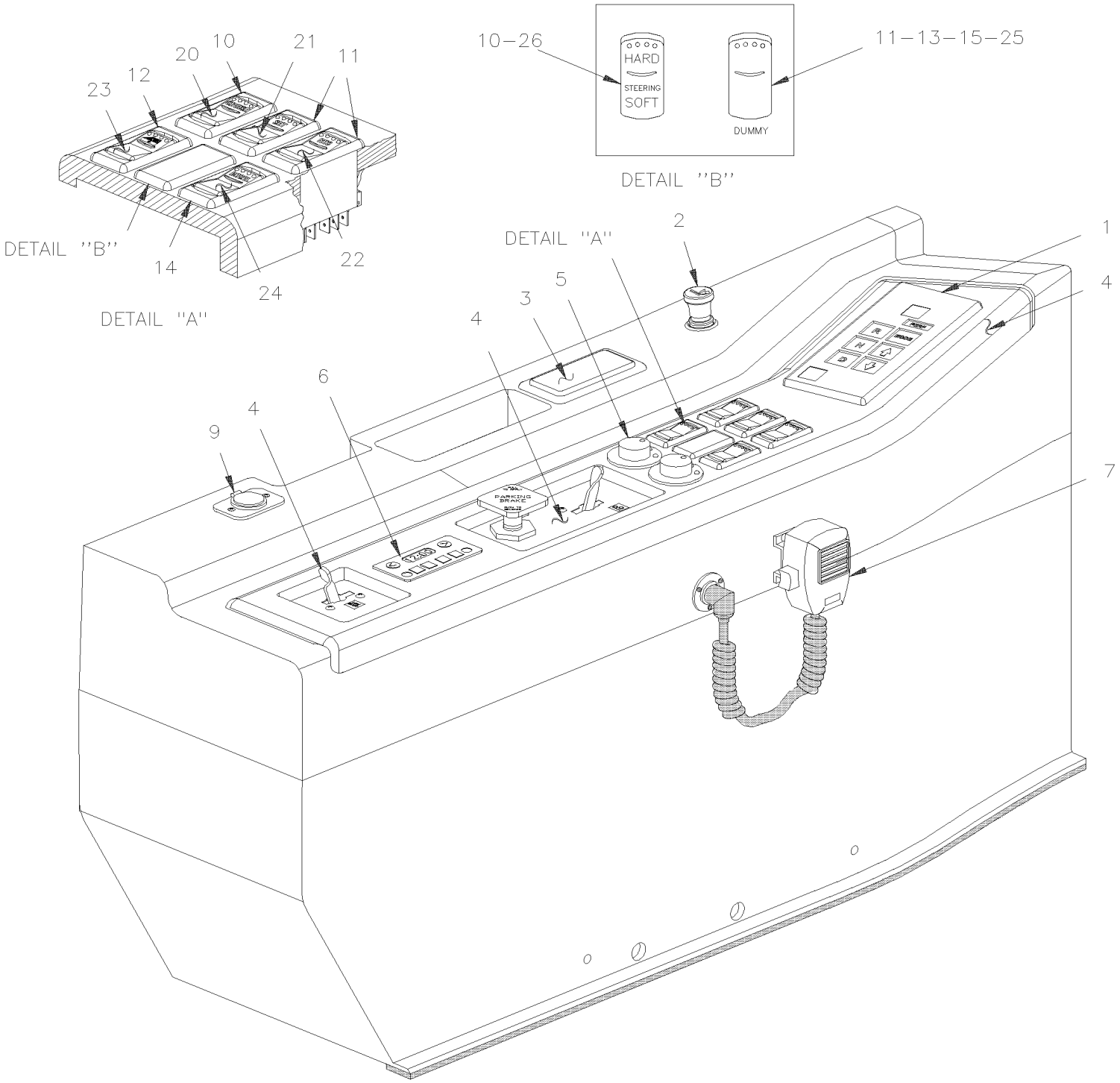

From Y-7046 To 6-8906		Date:07/2024	PAGE:Y2-0645-00

SWITCHES L.H. CONSOLE - BUS

Item#	Part	Description	XLII 45	XLII MTH40	XLII MTH45	XLII MTH45E	NOTES
1	571718	SHIFTER, SELECTOR "WORLD" / WTEC III	1				
1	571759	SHIFTER, SELECTOR "EATON" To 1-7461	1				
1	571760	DISPLAY MODULE "EATON" To 1-7461	1				
1	571773	SHIFTER SELECTOR "ZF"	1				
1	071562	DECAL / USE ELECTRONIC...PROXI...MAY CAUSE... / ENGLISH	1				ZF
1	071563	DECAL / USE ELECTRONIC...PROXI...MAY CAUSE... / FRENCH / ENGLISH	1				ZF
1	071564	DECAL / USE ELECTRONIC...PROXI...MAY CAUSE... / ENGLISH / SPANISH	1				ZF
NS	071300	SUPPORT / SHIFTER SELECTOR "ZF"	2				
NS	500423	NUT HEX NYRT #10-32 SS	2				
NS	065118	WIRING HARNESS DASHBOARD LEFT MODULE To Y-7264	1				
NS	065339	WIRING HARNESS DASHBOARD LEFT MODULE From Y-7265 To Y-7376	1				
1	065568	WIRING HARNESS DASHBOARD LEFT MODULE From 2-7765	1				
1	065406	WIRING HARNESS DASHBOARD LEFT MODULE From Y-7377 To 2-7764	1				
2	561491	LIGHTER ASSY / 12V	1				
2	561492	. POP OUT 12V	1				
2	562944	. BASE LIGHTER	1				
3	890006	ASHTRAY	1				
4	**Y2-1806-10**	**L.H. CONSOLE - BUS**					
5	562748	SWITCH, MIRROR / ROUND	AR				
5		CLIP RETAINER / MIRROR SWITCH (R2000-1372P)	2				
NS	562749	CONNECTOR / SH 8C / EURAMTEC W-RT8-200	2				
NS	507295	HOLE PLUG BUTTON / 1.375 O.D. BLACK	AR				
6	562680	TIMER ASSY / W/"ESPAR" PREHEATER / 7 DAYS To 2-7764	1				
6	871160	TIMER ASSY / W/"WEBASTO" PREHEATER To 2-7764	1				
. NS	871102	. BULB / 1.4WATT-24 VOLTS To 2-7764	1				
6	871250	TIMER ASSY / W/"WEBASTO" PREHEATER From 2-7765	1				
. NS	19511692	. BULB From 2-7765	1				
6	871101	TIMER ASSY / W/"PROHEAT" PREHEATER	1				
NS	064584	WIRING HARNESS / W/ "ESPAR" PREHEATER To 2-7764	1				
NS	064700	WIRING HARNESS / W/ "WEBASTO" PREHEATER To 2-7764	1				
NS	065572	WIRING HARNESS / W/ "WEBASTO" PREHEATER From 2-7765	1				
NS	065392	WIRING HARNESS / W/ "PROHEAT" PREHEATER	1				
NS	391968	DUMMY / W/O TIMER	1				
7	**Y2-2315-00**	**SOUND SYSTEM & ACCESSORIES - "R.E.I."**					
9	562796	12 VOLTS POWER OUTLET	1				
10	562697	SWITCH / ON-ON / D.P.D.T. / CH-OVER / W/RED & GREEN LED	1				A
11	562698	SWITCH / OFF-M/ON / D.P.S.T. / W/GREEN LED	3				
12	562699	SWITCH / M/ON-OFF-M/ON / D.P.D.T. / W/GREEN LED	AR				
13	562773	SWITCH / "DUMMY" / PLUG	1				
14	562855	SWITCH / OFF-M/ON / D.P.S.T. / W/RED LED	1				
NS	562763	CONNECTOR RH 10C / SWITCH / NGR 28-5637-2	AR				
NS	562768	SOCKET TERMINAL / 16-14 / PED 12015870	AR				

From Y-7046 To 6-8906		Date:07/2024	PAGE:Y2-0645-00

SWITCHES L.H. CONSOLE - BUS

Item#	Part	Description	XLII 45	XLII MTH40	XLII MTH45	XLII MTH45E	NOTES
15	563376	SWITCH / ON-M/ON / D.P.S.T. / NOMALY CLOSE 1-2 / 4-5 From 4-8181	1				B
20	562724	CAP / CRUISE CONTROL	1				
21	562725	CAP / SET / CRUISE CONTROL	1				
22	562726	CAP / RESUME / CRUISE CONTROL	1				
23	562740	CAP / WINDOW DRIVER'S	1				
24	562787	CAP / DECEL / CRUISE CONTROL	1				
25	562714	CAP / PLAIN (W/O DESCRIPTION)	1				B
NS	065479	CABLE ASSY / SAFETY SWITCH / PARKING BRAKE (BETWEN SWITCH & RELAY) To 4-8180	1				B C
26	562940	CAP / POWER STEERING / HARD-SOFT	1				A
NS	065951	KIT, RETROFIT PARKING BRAKE RELEASE SWITCH	AR				
		A) WITH STEERING ASSIST					
		B) WITH SAFETY SWITCH PARKING BRAKE					
		C) FOR PRODUCT IMPROVMENT ASK KIT #065951					
		ZF) WITH "ZF" TRANSMISION					

From Y-7046 To 8-9339		Date:07/2024	PAGE:Y2-0645-05
SWITCHES L.H. CONSOLE - MTH			

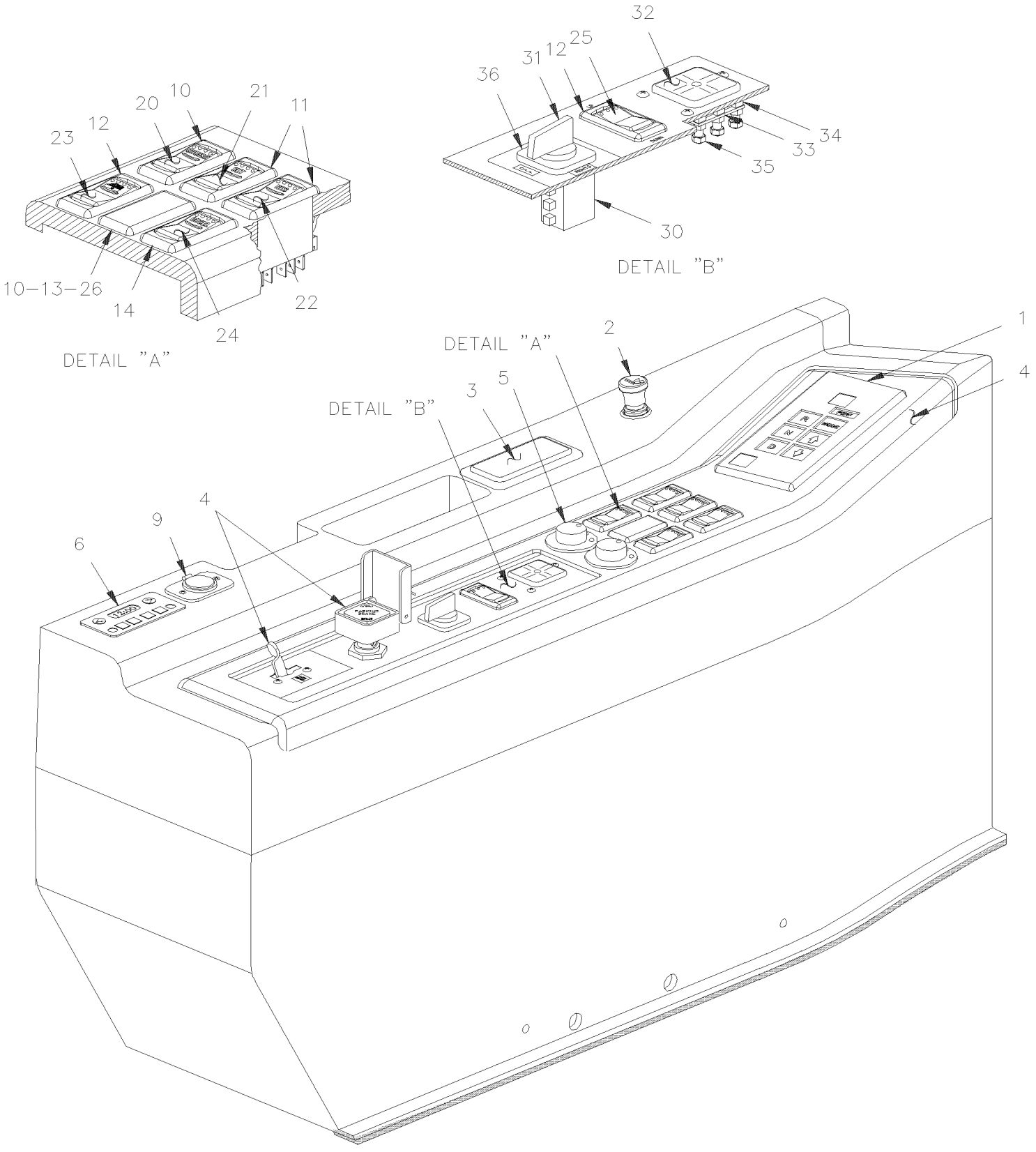

From Y-7046 To 8-9339		Date:07/2024	PAGE:Y2-0645-05

SWITCHES L.H. CONSOLE - MTH

Item#	Part	Description	XLII 45	XLII MTH40	XLII MTH45	XLII MTH45E	NOTES
1	571718	SHIFTER, SELECTOR "WORLD" / WTEC III To 7-9000		1	1	1	
1	572031	SHIFTER, SELECTOR "WORLD" / GEN IV From 7-9001		1	1	1	
NS	064871	WIRING HARNESS DASHBOARD LEFT MODULE To Y-7264		1	1	1	
NS	065338	WIRING HARNESS DASHBOARD LEFT MODULE From Y-7265 To 5-8644		1	1	1	
1	066353	WIRING HARNESS DASHBOARD LEFT MODULE From 5-8645 To 7-9095		1	1	1	
1	066932	WIRING HARNESS DASHBOARD LEFT MODULE From 7-9096			1	1	
2	561491	LIGHTER ASSY / 12V		1	1	1	
2	561492	. POP OUT 12V		1	1	1	
2	562944	. BASE LIGHTER		1	1	1	
NS	392043	DUMMY PLUG LIGHTER		AR	AR	AR	
3	890006	ASHTRAY		1	1	1	
4	**Y2-1806-50**	**L.H. CONSOLE - MTH**					
5	562748	SWITCH, MIRROR / ROUND		AR	AR	AR	
5		CLIP RETAINER / MIRROR SWITCH (R2000-1372P)		2	2	2	
NS	562749	CONNECTOR / SH 8C / EURAMTEC W-RT8-200		2	2	2	
NS	507295	HOLE PLUG BUTTON / 1.375 O.D. BLACK		AR	AR	AR	
NS	562799	DUMMY PLUG MIRROR		AR	AR	AR	
6	562680	TIMER ASSY / W/"ESPAR" PREHEATER / 7 DAYS To 2-7764		1	1	1	
6	871160	TIMER ASSY / W/"WEBASTO" PREHEATER To 2-7764		1	1	1	
. NS	871102	. BULB / 1.4WATT-24 VOLTS To 2-7764		1	1	1	
6	871250	TIMER ASSY / W/"WEBASTO" PREHEATER From 2-7765		1	1	1	
. NS	19511692	. BULB From 2-7765		1	1	1	
NS	064521	WIRING HARNESS / W/ "ESPAR" PREHEATER To 2-7764		1	1	1	
NS	064726	WIRING HARNESS / W/ "WEBASTO" PREHEATER To 2-7764		1	1	1	
6	065572	WIRING HARNESS / W/ "WEBASTO" PREHEATER From 2-7765		1	1	1	
9	562796	12 VOLTS POWER OUTLET		1	1	1	
10	562697	SWITCH / ON-ON / D.P.D.T. / CH-OVER / W/RED & GREEN LED		1	1	1	
11	562698	SWITCH / OFF-M/ON / D.P.S.T. / W/GREEN LED		3	3	3	
12	562699	SWITCH / M/ON-OFF-M/ON / D.P.D.T. / W/GREEN LED		AR	AR	AR	
13	562773	SWITCH / "DUMMY" / PLUG		1	1	1	
14	562855	SWITCH / OFF-M/ON / D.P.S.T. / W/RED LED		1	1	1	
20	562724	CAP / CRUISE CONTROL		1	1	1	
21	562725	CAP / SET / CRUISE CONTROL		1	1	1	
22	562726	CAP / RESUME / CRUISE CONTROL		1	1	1	
23	562740	CAP / WINDOW DRIVER'S		1	1	1	
24	562787	CAP / DECEL / CRUISE CONTROL		1	1	1	
25	562738	CAP / UP-DOWN		1	1	1	
26	562940	CAP / POWER STEERING / HARD-SOFT		1	1	1	
30	562517	SWITCH / 10 AMPS 4 POSITIONS 90° To 6-8931		1	1	1	A
30	563086	SWITCH / 10 AMPS 4 POSITIONS 90° From 6-8932		1	1	1	
31	561855	. KNOB To 6-8931		1	1	1	
NS	064657	CABLE ASSY / W/"LEVEL LOW" To 6-8931		1	1	1	

From Y-7046 To 8-9339		Date:07/2024	PAGE:Y2-0645-05

SWITCHES L.H. CONSOLE - MTH

Item#	Part	Description	XLII 45	XLII MTH40	XLII MTH45	XLII MTH45E	NOTES
NS	066510	CABLE ASSY / W/"LEVEL LOW" / MUX From 6-8932			1	1	
32	630075	LEVEL 5 WAYS		1	1	1	
33	391827	BRACKET / TO FIX LEVEL		1	1	1	
34	502162	SPRING COMPRESSION / .240 O.D. x .312 x .026		3	3	3	
35	500670	NUT HEX NYRT #8-32 Z050		3	3	3	
36	391994	DECAL "LEVEL LOW" To 6-8931		1	1	1	
36	392317	PLATE PLASTIC "LEVEL LOW" From 6-8932			1	1	
NS	065381	KIT, SWITCH LEVEL LOW To 6-8931		1	1	1	
. NS	391994	. DECAL "LEVEL LOW" To 6-8931		1	1	1	
. NS	392317	. PLATE PLASTIC "LEVEL LOW" To 6-8931		1	1	1	
. NS	561457	. SPRING SPADE TERMINAL #6 / 22-16 / AMP 52929 To 6-8931		7	7	7	
. NS	563086	. SWITCH / 10 AMPS 4 POSITIONS 90° To 6-8931		1	1	1	
. NS	D390096	. DIAGRAM, DASHBOARD, LEFT MODULE, MTH To 6-8931		1	1	1	
. NS	D390113	. DIAGRAM, DASHBOARD, LEFT MODULE, VIP MUX To 6-8931		1	1	1	
. NS	IS-06020	. INSTRUCTION SHEET To 6-8931		1	1	1	
. NS	FI-06020	. FEUILLE D'INSTRUCTION To 6-8931		1	1	1	
		A) THIS SWITCH IT SUPPERSEEDED BY KIT # 065381					

From Y-7046 To 8-9339		Date:07/2024	PAGE:Y2-0645-10
L.H. DASHBOARD PANEL			

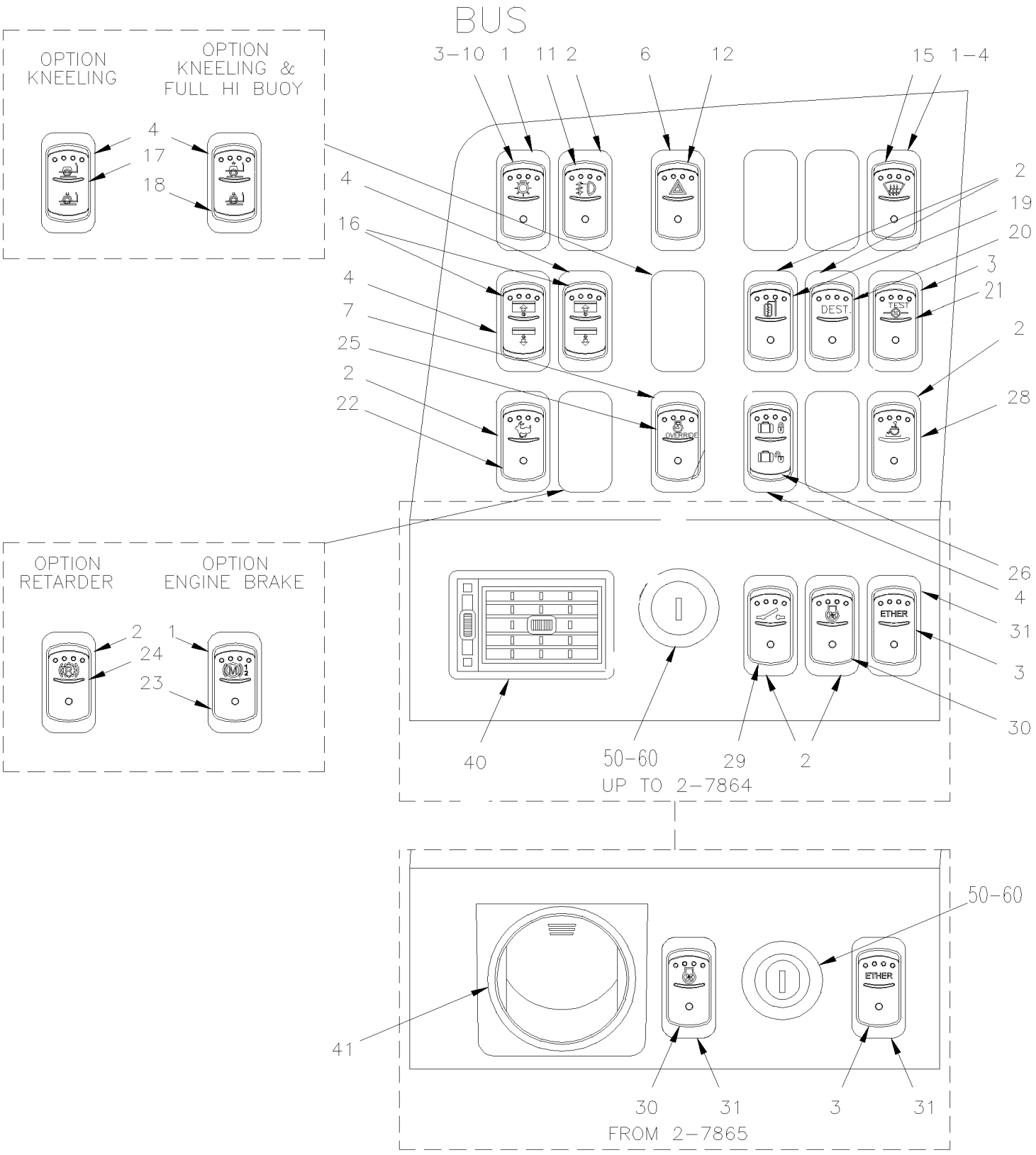

From Y-7046 To 8-9339		Date:07/2024	PAGE:Y2-0645-10
L.H. DASHBOARD PANEL			

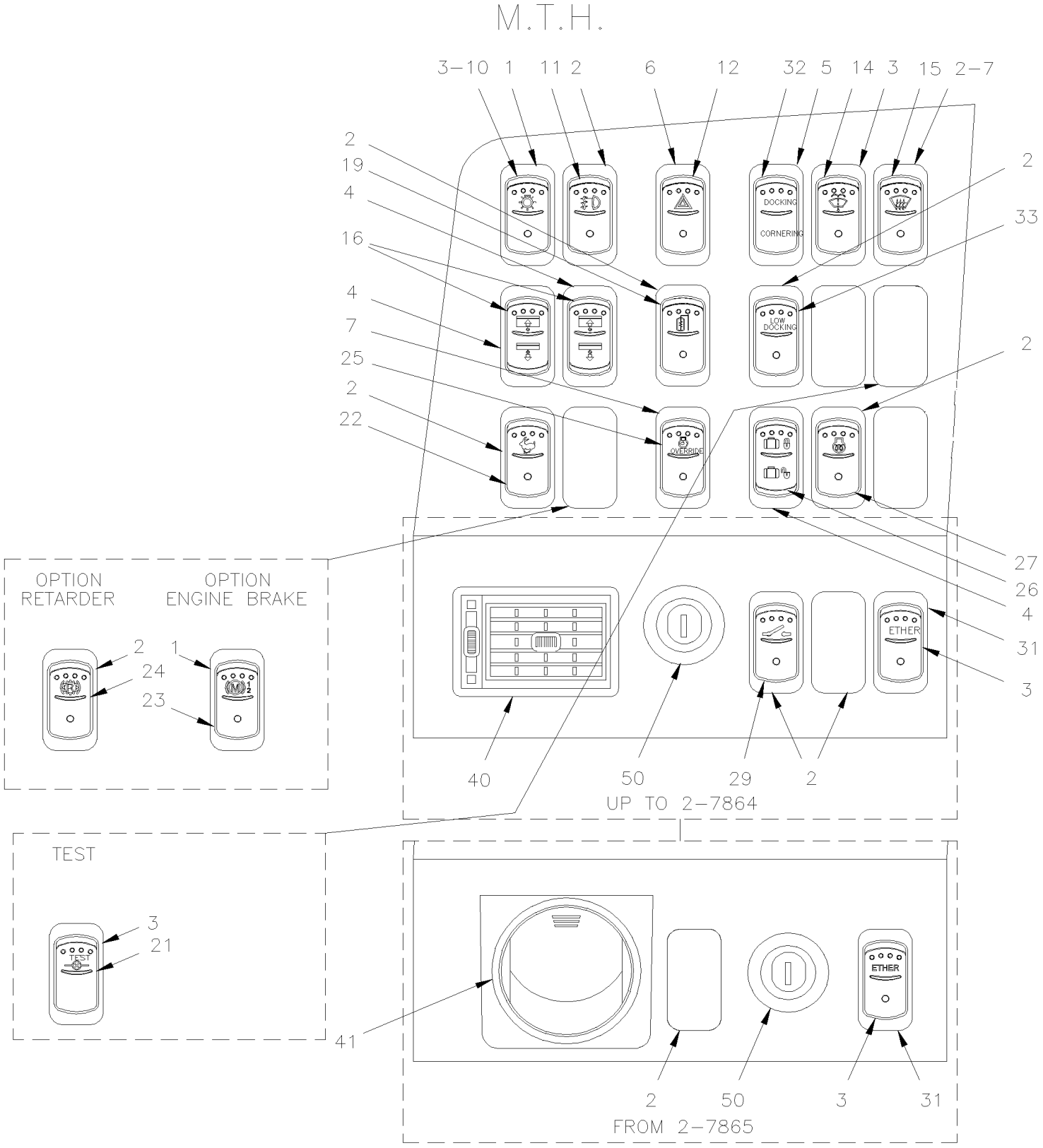

From Y-7046 To 8-9339		Date:07/2024	PAGE:Y2-0645-10

L.H. DASHBOARD PANEL

Item#	Part	Description	XLII 45	XLII MTH40	XLII MTH45	XLII MTH45E	NOTES
1	562696	SWITCH / OFF-ON-ON SERIES S.P.D.T. / W/RED & GREEN LED	4	4	4	4	
2	562697	SWITCH / ON-ON / D.P.D.T. / CH-OVER / W/RED & GREEN LED	AR	AR	AR	AR	
3	562698	SWITCH / OFF-M/ON / D.P.S.T. / W/GREEN LED	1	1	1	1	
4	562699	SWITCH / M/ON-OFF-M/ON / D.P.D.T. / W/GREEN LED	3	3	3	3	
5	562700	SWITCH / ON-OFF-ON / D.P.D.T. / W/GREEN LED	1	1	1	1	
6	562854	SWITCH / ON-ON / D.P.D.T. / CH-OVER / W/RED LED	1	1	1	1	
7	562855	SWITCH / OFF-M/ON / D.P.S.T. / W/RED LED	1	1	1	1	
NS	562773	SWITCH / "DUMMY" / PLUG	AR	AR	AR	AR	
NS	562763	CONNECTOR RH 10C / SWITCH / NGR 28-5637-2	AR	AR	AR	AR	
NS	562768	SOCKET TERMINAL / 16-14 / PED 12015870	AR	AR	AR	AR	
10	562708	CAP / HEADLIGHT	1	1	1	1	
11	562709	CAP / FOG	1	1	1	1	
12	562710	CAP / WARNING LIGHT HAZARD	1	1	1	1	
13	562711	CAP / WIPER (UPPER)	1	1	1	1	
14	562715	CAP / WINDSHIELD WASHER (UPPER)	1	1	1	1	
15	562712	CAP / DEFOGGER	1	1	1	1	
16	562739	CAP / ROLLER BLIND	2	2	2	2	
17	562737	CAP / KNEELING	1	1	1	1	
18	562738	CAP / UP-DOWN	1	1	1	1	
19	562713	CAP / MIRROR HEATER	1	1	1	1	
20	562743	CAP / DESTINATION SIGN	1	1	1	1	
21	562741	CAP / TELL TALE TEST	1	1	1	1	
NS	064673	CABLE ASSY / ANTI-THEF	1				B
NS	065053	CABLE ASSY SWITCH READING LIGHT	1				D
22	562723	CAP / FAST IDLE	1	1	1	1	
23	562728	CAP / "JACOB'S"	1	1	1	1	
24	562729	CAP / "RETARDER"	1	1	1	1	
25	562727	CAP / ENGINE OVERRIDE	1	1	1	1	
NS	064819	DIODE DOUBLE ASSY		1	1	1	E
NS	065389	CABLE ASSY / "JACOB`S" & RETARDER		1	1	1	E
NS	562697	SWITCH / ON-ON / D.P.D.T. / CH-OVER / W/RED & GREEN LED		1	1	1	E
NS	561707	RELAY 24V S.P.D.T. W/RESISTOR / To 5-8577		1	1	1	E
NS	563332	RELAY 24V S.P.D.T. W/RESISTOR / "VOLVO" (20374662) From 5-8578		1	1	1	E
26	562736	CAP / LUGGAGE DOOR LOCK	1	1	1	1	
27	562722	CAP / PRE-HEATER	1				
28	562774	CAP / W.C.L.	1				
29	562742	CAP / MASTER CUT-OFF	1	1	1	1	
30	562735	CAP / RADIATOR FAN	1	1	1	1	
31	562734	CAP / ETHER	AR	AR	AR	AR	
32	562733	CAP / DOCKING & CORNERING	1	1	1	1	
33	562732	CAP / LIGHT LOW DOCKING	1	1	1	1	
34	562731	CAP / BACK-UP ALARM	1	1	1	1	

From Y-7046 To 8-9339		Date:07/2024	PAGE:Y2-0645-10

L.H. DASHBOARD PANEL

Item#	Part	Description	XLII 45	XLII MTH40	XLII MTH45	XLII MTH45E	NOTES
40	871106	LOUVER, ADJUSTABLE To 2-7864	1	1	1	1	
41	871314	LOUVER, ADJUSTABLE / ROUND 2 5/8" O.D. From 2-7865	1	1	1	1	
50	562147	SWITCH, IGNITION / CODE 801	1	1	1	1	
. NS	780003	. KEY, IGNITION SWITCH CODE 801	1	1	1	1	
50	562148	SWITCH, IGNITION / CODE 802	1	1	1	1	
. NS	780004	. KEY, IGNITION SWITCH CODE 802	1	1	1	1	
50	562151	SWITCH, IGNITION / CODE 803	1	1	1	1	
. NS	780006	. KEY, IGNITION SWITCH CODE 803	1	1	1	1	
50	562150	SWITCH, IGNITION / CODE 804	1	1	1	1	
. NS	780007	. KEY, IGNITION SWITCH CODE 804	1	1	1	1	
50	562152	SWITCH, IGNITION / CODE 805	1	1	1	1	
. NS	780008	. KEY, IGNITION SWITCH CODE 805	1	1	1	1	
50	562149	SWITCH, IGNITION / CODE 806	1	1	1	1	
. NS	780009	. KEY, IGNITION SWITCH CODE 806	1	1	1	1	
50	562146	SWITCH, IGNITION / KEYLESS (ACC-OFF-IGN-START)	1	1	1	1	
50	562296	KEY / IGNITION BLANCK UNCUT	AR	AR	AR	AR	
NS	562674	KEYLESS / TRANSMITTER KEY RING / W/DESCRIPT To 4-8295		1	1	1	S
. NS	IS-03103	. SEE INSTRUCTION SHEET To 4-8295		1	1	1	S
NS	563542	KEYLESS / TRANSMITTER KEY RING / W/PICTOGRA From 4-8296		1	1	1	
NS	064436	CABLE ASSY / BETWEN IGN SWITCH & RELAY	1				C
NS	064437	CABLE ASSY / BETWEN REAR SWITCH & HARNESS	1				C
NS	561707	RELAY 24V S.P.D.T. W/RESISTOR / To 5-8577	1				C
NS	563332	RELAY 24V S.P.D.T. W/RESISTOR / "VOLVO" (20374662) From 5-8578	1				C
		NEXT ITEMS USED WITH "FORD" IGNITION SWITCH					
60	065512	CYLINDER IGNITION / CODE FA 0000	1				A
60	065658	CYLINDER IGNITION / CODE FA 0001	1				A
NS	064902	CYLINDER IGNITION / CODE FA 0013	1				A
60	065590	CYLINDER IGNITION / CODE FA 0055	1				A
60	065409	CYLINDER IGNITION / CODE FA 0107	1				A
60	065851	CYLINDER IGNITION / CODE FA 0109	1				A
60	065396	CYLINDER IGNITION / CODE FA 0113	1				A
60	065397	CYLINDER IGNITION / CODE FA 0206	1				A
60	065878	CYLINDER IGNITION / CODE FA 0208	1				A
60	064417	CYLINDER IGNITION / CODE FA 0528	1				A
60	065043	CYLINDER IGNITION / CODE FA 0528	1				A
60	065500	CYLINDER IGNITION / CODE FA 0704	1				A
60	065607	CYLINDER IGNITION / CODE FA 0714	1				A
60	065501	CYLINDER IGNITION / CODE FA 1343	1				A
NS	562654	SWITCH & CABLE / SWITCH	1				A
NS	562655	NUT / TO FIX SWITCH	1				A

From Y-7046 To 8-9339		Date:07/2024	PAGE:Y2-0645-10

L.H. DASHBOARD PANEL

Item#	Part	Description	XLII 45	XLII MTH40	XLII MTH45	XLII MTH45E	NOTES
NS	391904	SPACER / SWITCH & MOUNTING PLATE	1				A
NS	064419	CABLE ASSY / RELAY AND SWITCH	1				A
NS	561707	RELAY 24V S.P.D.T. W/RESISTOR / To 5-8577	1				A
NS	563332	RELAY 24V S.P.D.T. W/RESISTOR / "VOLVO" (20374662) From 5-8578	1				A
61	780645	KEY CODE A	1				A
61	780654	KEY CODE / FA 0001	1				A
61	780604	KEY CODE / FA 0013	1				A
61	780651	KEY CODE / FA 0055	1				A
61	780634	KEY CODE / FA 0107	1				A
61	780656	KEY CODE / FA 0109	1				A
61	780627	KEY CODE / FA 0113	1				A
61	780631	KEY CODE / FA 0206	1				A
61	780659	KEY CODE / FA 0208	1				A
61	780579	KEY CODE / FA 0528	1				A
61	780639	KEY CODE / FA 0704	1				A
61	780608	KEY CODE / FA 0714	1				A
61	780644	KEY CODE / FA 1343	1				A
		A) THOSE ITEMS ARE USED WITH "FORD" IGNITION KEY. SEE DIAGRAM D060950 FOR MORE INFORMATION					
		B) COACH EQUIPPED WITH THIEF PROTECTOR ON "TELL TALE TEST"					
		C) COACH EQUIPPED WITH 3 MINUTES IDLE TIME DELAY					
		D) COACH EQUIPPED WITH READING LIGHT TEST (DIAGRAM D060938 PAGE 11.4 SP2)					
		E) VEHICLE EQUIPPED WITH "JACOB" & "RETARDER"					
		S) WHEN YOU REPLACE KEYLESS 562674 WITH THE NEW 563542 YOU NEED TO REPLACE MODULE 562673 BY THE NEW 563541 / SEE INSTRUCTION SHEET IS-03103					

From Y-7046 To 8-9339		Date:07/2024	PAGE:Y2-0645-20
CENTER DASHBOARD PANEL			

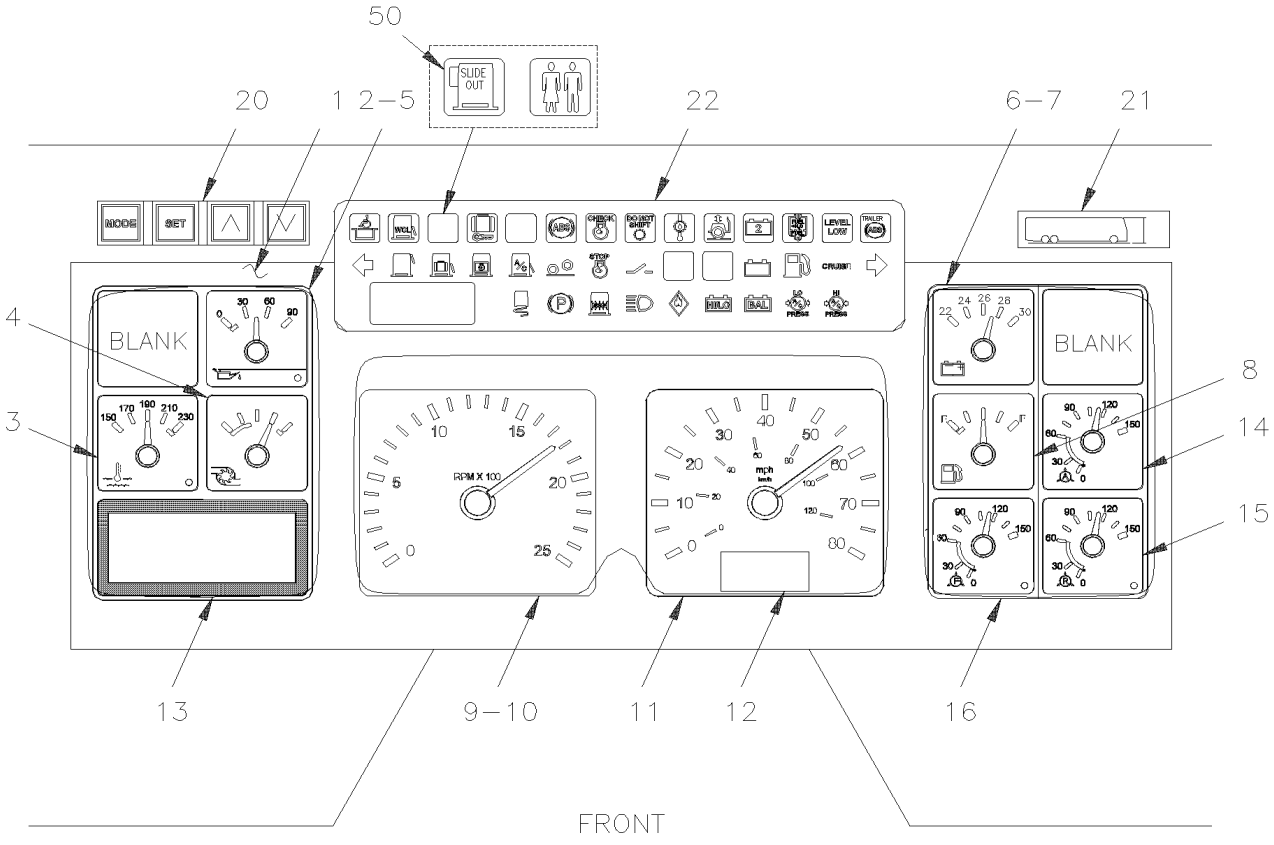

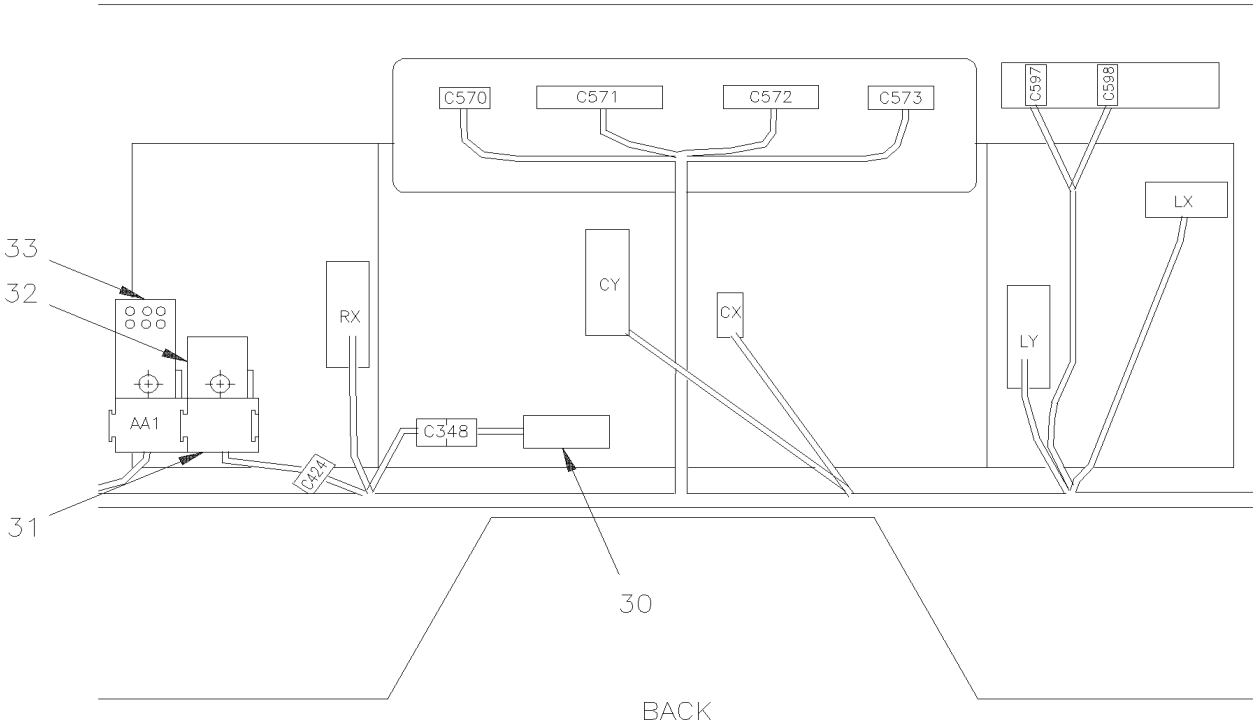

From Y-7046 To 8-9339		Date:07/2024	PAGE:Y2-0645-20

CENTER DASHBOARD PANEL

Item#	Part	Description	XLII 45	XLII MTH40	XLII MTH45	XLII MTH45E	NOTES
1	065126	CLUSTER, MPH To 5-8373	1	1	1	1	
1	066071	CLUSTER, MPH From 5-8374 To 5-8619	1	1	1	1	
1	563560	CLUSTER, MPH From 5-8620	1	1	1	1	
1	065128	CLUSTER, MPH From 1-7377 To 1-7461	1				B
1	065127	CLUSTER, KPH To 5-8367	1	1	1	1	
1	066072	CLUSTER, KPH From 5-8368 To 5-8619	1	1	1	1	
1	563559	CLUSTER, KPH From 5-8620	1				
1	065129	CLUSTER, KPH From 1-7377 To 1-7461	1				B
1	065944	CLUSTER, MPH / W/"ZF" TRANS To 5-8373	1				
1	066073	CLUSTER, MPH / W/"ZF" TRANS From 5-8374 To 5-8619	1				
1	563561	CLUSTER, MPH / W/"ZF" TRANS From 5-8620	1				
1	065945	CLUSTER, KPH / W/"ZF" TRANS To 5-8367	1				
1	066074	CLUSTER, KPH / W/"ZF" TRANS From 4-8165 To 5-8619	1				
1	563562	CLUSTER, KPH / W/"ZF" TRANS From 5-8620	1				
NS	065703	KIT, CLUSTER "POLLACK" GLASS REPLACEMENT	1	1	1	1	
. NS	IS-02038	. SEE INSTRUCTION SHEET					
2	563573	. GAUGES LEFT SIDE ASSY / 3 GAUGES	1	1	1	1	
3	N.P.N.	. . GAUGE WATER TEMPERATURE	1	1	1	1	4
4	N.P.N.	. . GAUGE BOOSTER	1	1	1	1	4
5	N.P.N.	. . GAUGE OIL PRESSURE	1	1	1	1	4
6	563574	. GAUGES RIGHT SIDE ASSY / 2 GAUGES	1	1	1	1	
7	N.P.N.	. . GAUGE VOLTAGE	1	1	1	1	4
8	N.P.N.	. . GAUGE FUEL LEVEL	1	1	1	1	4
9	563566	. TACHO & SPEEDOMETER ASSY / MILES	1	1	1	1	
9	563567	. TACHO & SPEEDOMETER ASSY / KM	1	1	1	1	
10	N.P.N.	. . TACHOMETER	1	1	1	1	4
11	N.P.N.	. . SPEEDOMETER MILES	1	1	1	1	4
11	N.P.N.	. . SPEEDOMETER KM	1	1	1	1	4
12	N.P.N.	. . ODO LCD	1	1	1	1	4
13	066075	. KIT, GRAPHIC DISPLAY "POLLACK"	1	1	1	1	
. NS	563539	. . GRAPHIC DISPLAY "POLLACK"	1	1	1	1	
. NS	564586	. . GRAPHIC DISPLAY MODULE "POLLACK" CURRENT	1	1	1	1	
. NS	IS-17903	. . SEE INSTRUCTION SHEET	1	1	1	1	
13	IS17910	. KIT, GRAPHIC DISPLAY "POLLACK"	1	1	1	1	
. NS	19519274	. . GRAPHIC DISPLAY	1	1	1	1	
. NS	IS-17910	. . SEE INSTRUCTION SHEET	1	1	1	1	
NS	562838	. BULB / .50WATT-12VOLTS / SAE #2721MFX	AR	AR	AR	AR	A
NS	562909	TOOL / CLUSTER BULB REMOVER	1	1	1	1	
. NS	MI03-14A	. SEE MAINTENANCE INFORMATION	1	1	1	1	
NS	392009	MOUNTING PLATE / CLUSTER	2	2	2	2	
NS	5001402	SCREW MA CHE PH M4-0.7x25 Z050	5	5	5	5	
14	563565	. GAUGE AIR APPLICATION	1	1	1	1	

From Y-7046 To 8-9339		Date:07/2024	PAGE:Y2-0645-20

CENTER DASHBOARD PANEL

Item#	Part	Description	XLII 45	XLII MTH40	XLII MTH45	XLII MTH45E	NOTES
15	563564	. GAUGE AIR REAR	1	1	1	1	
16	563563	. GAUGE AIR FRONT	1	1	1	1	
NS	563575	. BUZZER	1	1	1	1	
NS	563576	. CPU BOARD SPARE	1	1	1	1	
NS	641447	UNION ELBOW 90° / PUSH-IN FITTING / #4x#4 BR	3	3	3	3	
20	563017	CLUSTER SWITCH ASSY "POLLACK"	1	1	1	1	
NS	392011	MOUNTING PLATE / CLUSTER SWITCH	1	1	1	1	
NS	5001412	SCREW MA CHE PH M3-0.5x20 EMN	2	2	2	2	
NS	5001408	NUT HEX STO M3-0.5 ZP	2	2	2	2	
21	402469	DECAL / VEHICLE HEIGHT 11' 8" / MTH 83"	1	1	1		
21	402468	DECAL / VEHICLE HEIGHT 11' 11" / MTH 86"		1	1	1	
21	405108	DECAL / VEHICLE HEIGHT 12' 2" / MTH 89"				1	
22	562907	TELLTALE MODULE ASSY	1				
. NS	563672	. FACE PLACE INSERT RETAINER	AR				
22	562907	TELLTALE MODULE ASSY To 7-9095		1	1	1	
. NS	563672	. FACE PLACE INSERT RETAINER To 7-9095		AR	AR	AR	
22	563333	TELLTALE MODULE ASSY From 7-9096		1	1	1	
. NS	563720	. TELL TALE FACE PLATE From 7-9096		1	1	1	
NS	392010	ATTACHMENT ANGLE / TO FIX TELLTALE	1	1	1	1	
NS	5001401	SCREW MA CHE PH M4-0.7x8 ZP	4	4	4	4	
NS	5001397	SCREW MA CHE PH M3-0.5x8 SS	4	4	4	4	
NS	5001407	WASHER LO EXT 3.2x6.0x0.4 SS	4	4	4	4	
30	064474	ALARM ASSY / WATER IN FUEL / (C-348)	1	1	1	1	
. NS	561479	. PIN TERMINAL / 24-18 / MOLEX 02-06-2103	1	1	1	1	
. NS	562070	. CONNECTOR / (.062) / PH 6C / MOLEX 03-06-2061	1	1	1	1	
. NS	561479	. PIN TERMINAL / 24-18 / MOLEX 02-06-2103	5	5	5	5	
NS	**Y2-1806-00**	**CENTRAL DASHBOARD PANEL**					
31	063070	HARNESS ASSY / ALARM	1				
31	063070	HARNESS ASSY / ALARM To 7-9095		1	1	1	
32	561706	RELAY 12V S.P.D.T. W/DIODE /	1				
32	561706	RELAY 12V S.P.D.T. W/DIODE / To 7-9095		1	1	1	
33	562117	ALARM BUZZER To 4-8165	2	2	2	2	
33	563161	ALARM BUZZER From 4-8166	2	2	2	2	
50	**FM-00IM-00**	**INSERT - "MEGATECH"**					
		A) TOOL TO REMOVE BULB #562909					
		B) WITH MANUAL TRANSMISSION					
		4) NO PARTS NUMBER					

From Y-7046 To 8-9339		Date:07/2024	PAGE:FM-00IM-00
INSERT - "MEGATECH"			

10000 – AC0354	10001 – AC0355	10002 – AC0356	10003 – AC0357	10004 – AC0358
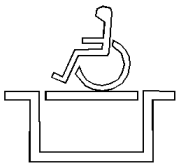	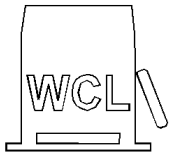	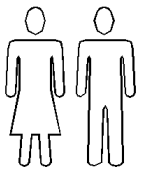	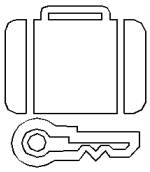	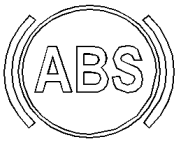
563384	563385	563386	563387	563388
10005 – AC0359	10006 – AC0360	10007 – AC0361	10008 – AC0362	10009 – AC0363
		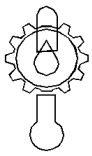	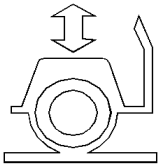	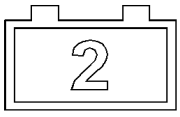
563389	563390	563391	563392	562958
10010 – AC0364	10011 – AC0365	10012 – AC0410	10013 – AC0367	10014 – AC0530
563393	563394	563395	563396	562966
10015 – AC1148	10016 – AC1151	10017 – AC1152	10018 – AC1153	
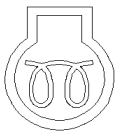		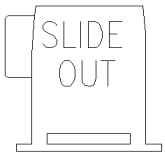		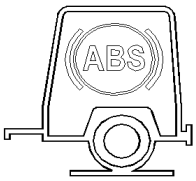
563397	563016	563178	563179	563427
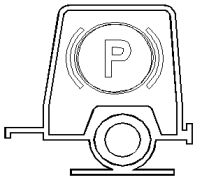	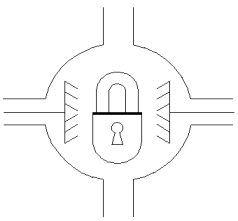		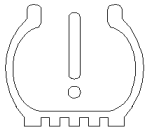	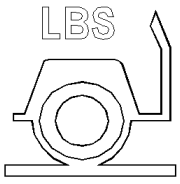
563428	563655	565860	563469	564480

From Y-7046 To 8-9339		Date:07/2024	PAGE:FM-00IM-00
INSERT - "MEGATECH"			

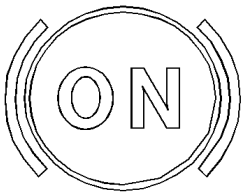

564481

From Y-7046 To 8-9339		Date:07/2024	PAGE:FM-00IM-00
INSERT - "MEGATECH"			

A

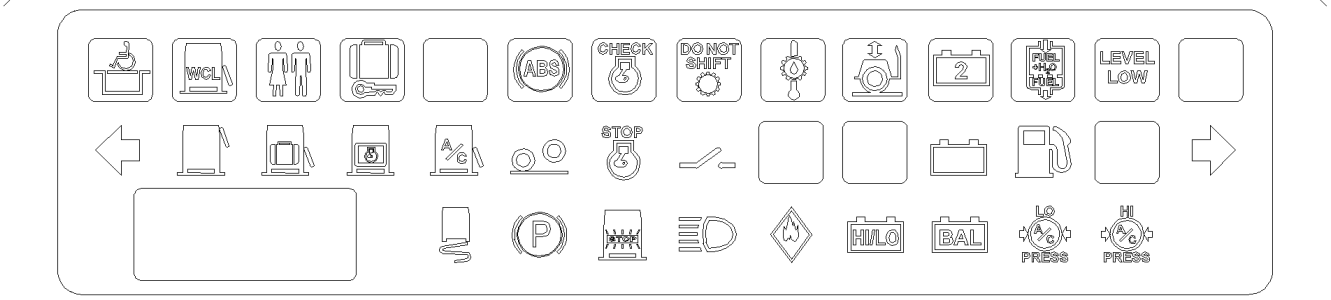

B

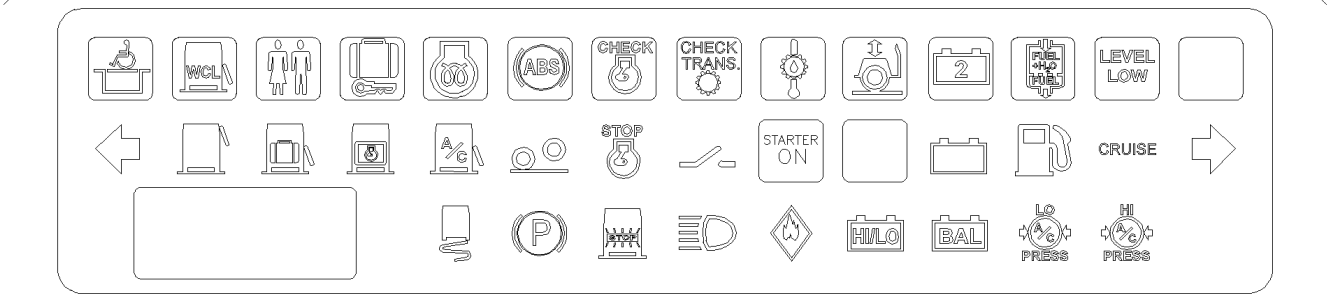

C

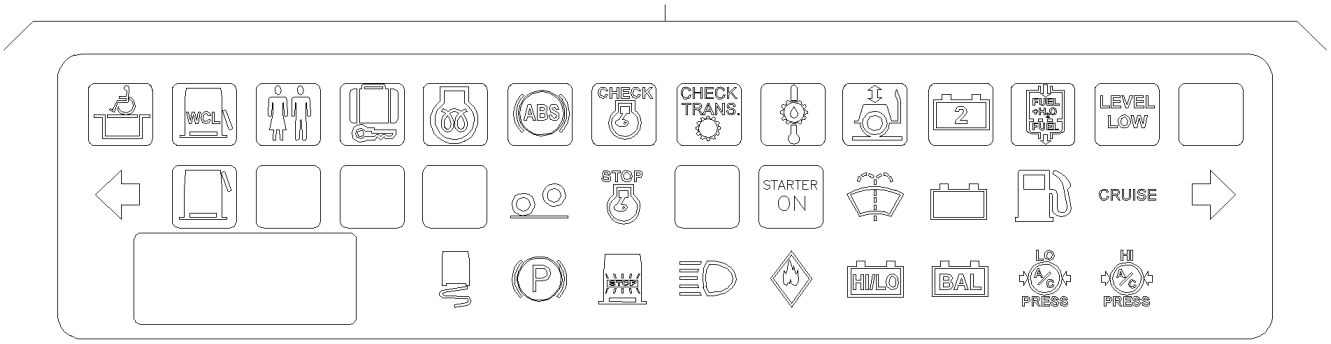

D

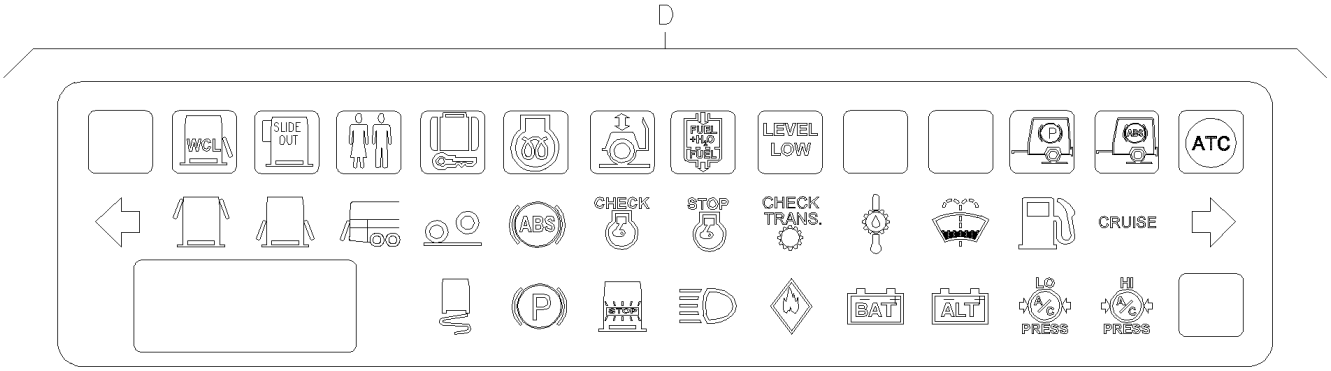

From Y-7046 To 8-9339		Date:07/2024	PAGE:FM-00IM-00
INSERT - "MEGATECH"			

E

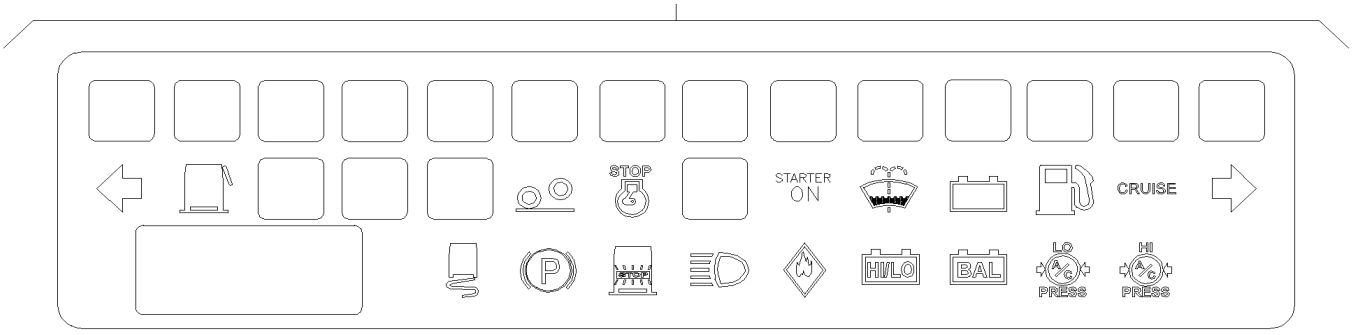

F

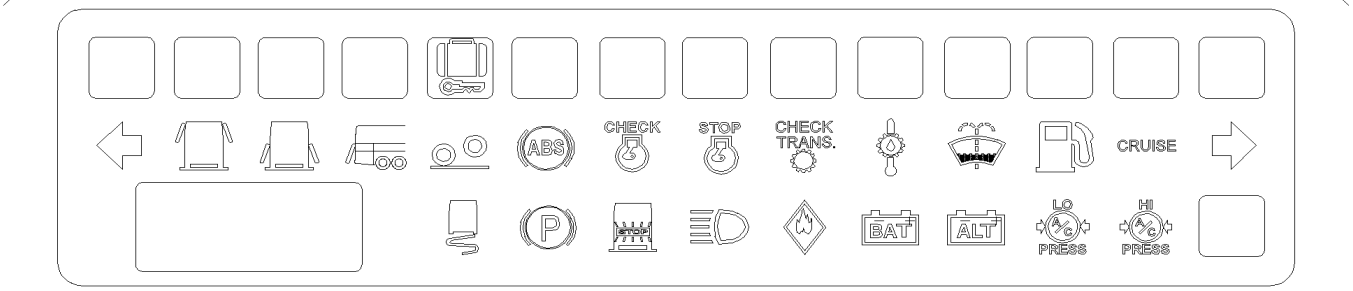

G

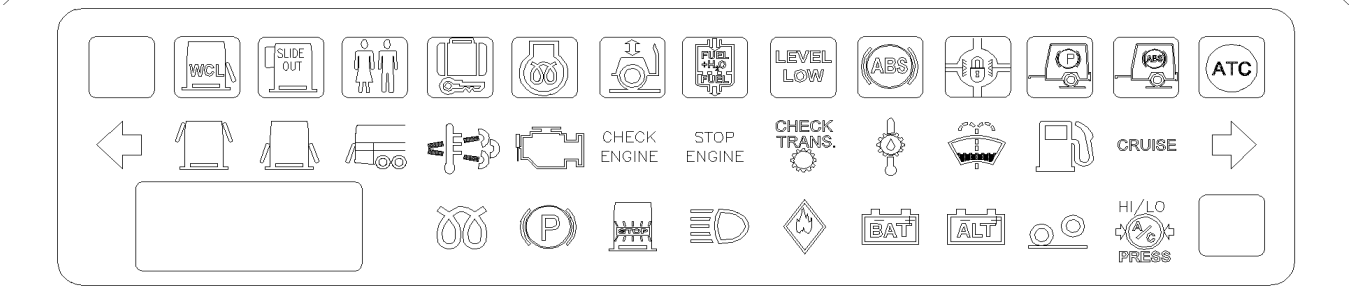

H

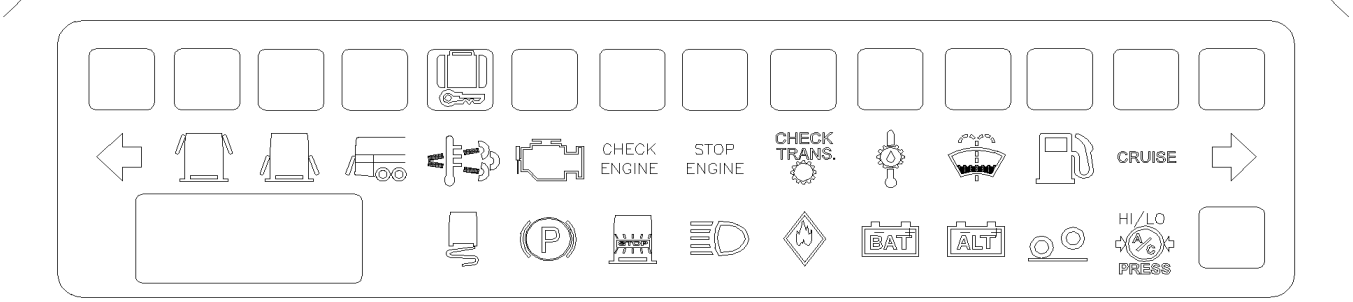

From Y-7046 To 8-9339		Date:07/2024	PAGE:FM-00IM-00
INSERT - "MEGATECH"			

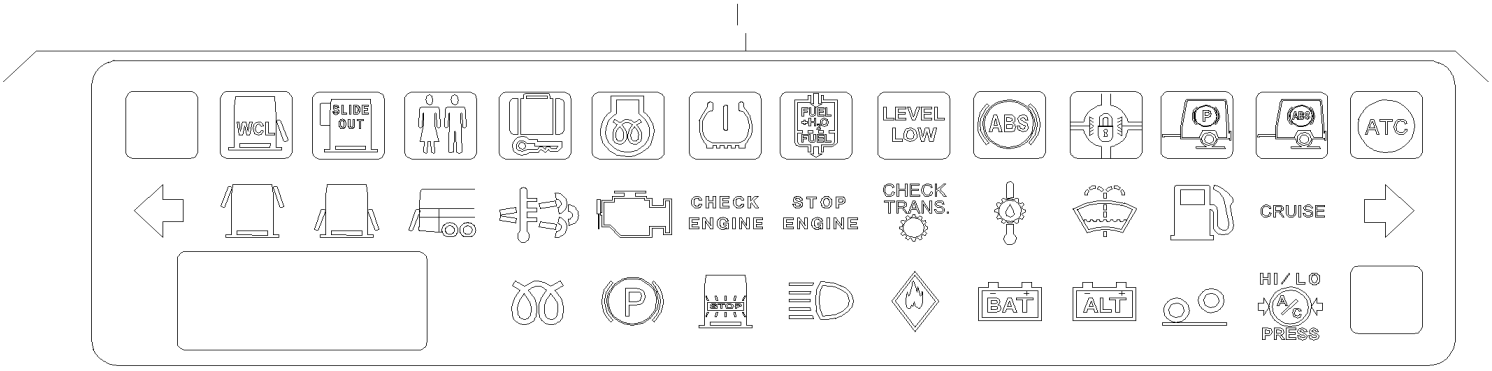

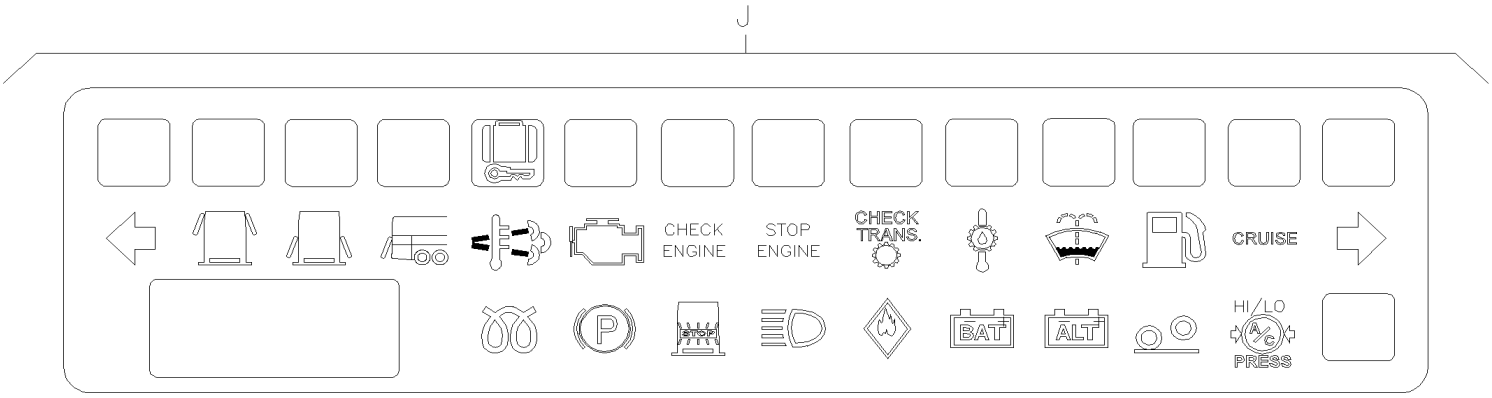

From Y-7046 To 8-9339		Date:07/2024	PAGE:FM-00IM-00

INSERT - "MEGATECH"

Item#	Part	Description	XLII 45	XLII MTH40	XLII MTH45	XLII MTH45E	NOTES
1	563384	INSERT / RED / PLATFORM	AR	AR	AR	AR	
2	563385	INSERT / RED / W.C.L. DOOR AJAR	AR	AR	AR	AR	
3	563386	INSERT / RED / LAVATORY OCCIPIED	AR	AR	AR	AR	
4	563387	INSERT / AMBER / LUGGAGE DOOR LOCK	AR	AR	AR	AR	
5	563388	INSERT / AMBER / ABS	AR	AR	AR	AR	
6	563389	INSERT / AMBER / CHECK ENGINE	AR	AR	AR	AR	
7	563390	INSERT / RED / DO NOT SHIFT	AR	AR	AR	AR	
8	563391	INSERT / AMBER / OIL TEMPERATURE	AR	AR	AR	AR	
9	563392	INSERT / AMBER / KNEELING / HI-BUOY	AR	AR	AR	AR	
10	563393	INSERT / AMBER / WATER IN FUEL	AR	AR	AR	AR	
11	563394	INSERT / RED / LEVEL LOW	AR	AR	AR	AR	
12	563395	INSERT / RED / CHECK TRANSMISSION	AR	AR	AR	AR	
13	563396	INSERT / DOOR AJAR	AR	AR	AR	AR	
14	563397	INSERT / AUXILIARY WATER HEATER	AR	AR	AR	AR	
15	563016	INSERT / BLACK / STARTOR ON / W/LETTER CLEAR	AR	AR	AR	AR	
15	563022	INSERT / RED / STARTOR ON	AR	AR	AR	AR	
16	562966	INSERT / BLACK W/LETTER CLEAR / ATC	AR	AR	AR	AR	
17	562958	INSERT / RED / BATTERY # 2	AR	AR	AR	AR	
18	563178	INSERT / SLIDE OUT	AR	AR	AR	AR	
19	563179	INSERT / BLACK W/LETTER CLEAR / TRAILER ABS	AR	AR	AR	AR	
20	563427	INSERT / TRAILER ABS	AR	AR	AR	AR	
21	563428	INSERT / TRAILER BRAKE PROBLEM	AR	AR	AR	AR	
22	563655	INSERT / DIFERENTIAL LOCK	AR	AR	AR	AR	
23	565860	INSERT / ESCAPPE HATCH	AR	AR	AR	AR	
24	563469	INSERT / TIRE PRESSURE	AR	AR	AR	AR	
25	564480	INSERT / VEHICULE WEIGHT	1	1	1	1	
26	564481	INSERT / BRAKE ON	1	1	1	1	
A	562791	TELLTALE MODULE ASSY	AR	AR	AR	AR	
B	562891	TELLTALE MODULE ASSY	AR	AR	AR	AR	
C	562907	TELLTALE MODULE ASSY	AR	AR	AR	AR	
. NS	563672	. FACE PLACE INSERT RETAINER	AR	AR	AR	AR	
D	563333	TELLTALE MODULE ASSY	AR	AR	AR	AR	
. NS	563720	. TELL TALE FACE PLATE	1	1	1	1	
E	563672	. FACE PLACE INSERT RETAINER	1	1	1	1	A
F	563720	. TELL TALE FACE PLATE	1	1	1	1	B
G	564032	TELLTALE MODULE ASSY	AR	AR	AR	AR	
. NS	564201	. FACE PLACE INSERT RETAINER	1	1	1	1	
I	564080	TELLTALE MODULE ASSY	1	1	1	1	
		A) TO FIX ANY INSERT ABOVE TO TELLS TALES MODULE 562907					

From Y-7046 To 8-9339		Date:07/2024	PAGE:FM-00IM-00

INSERT - "MEGATECH"

Item#	Part	Description	XLII 45	XLII MTH40	XLII MTH45	XLII MTH45E	NOTES
		B) TO FIX ANY INSERT ABOVE TO TELLS TALES MODULE 563333					

From Y-7046 To 8-9339		Date:07/2024	PAGE:Y2-0645-30
R.H. DASHBOARD PANEL			

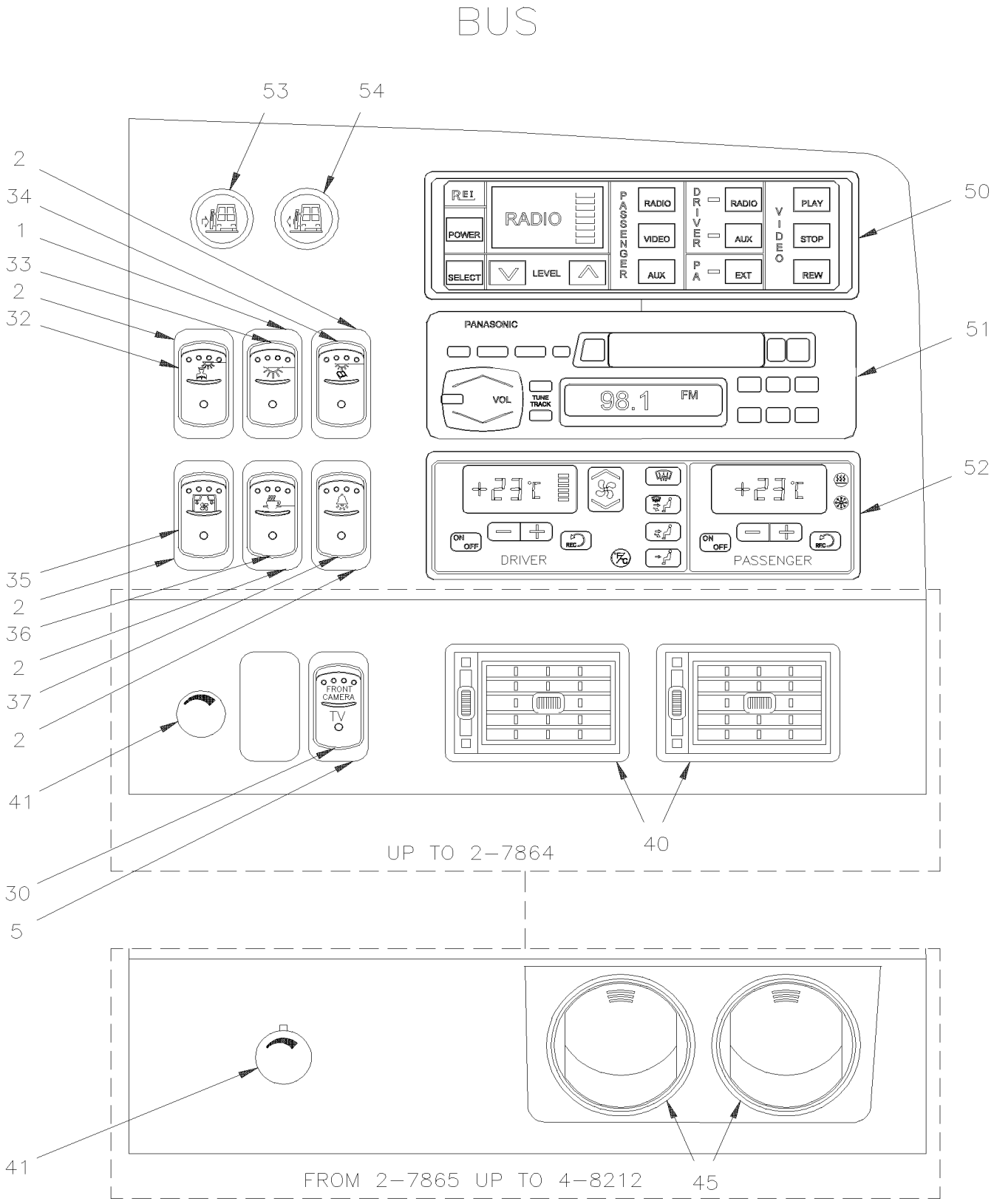

From Y-7046 To 8-9339		Date:07/2024	PAGE:Y2-0645-30
R.H. DASHBOARD PANEL			

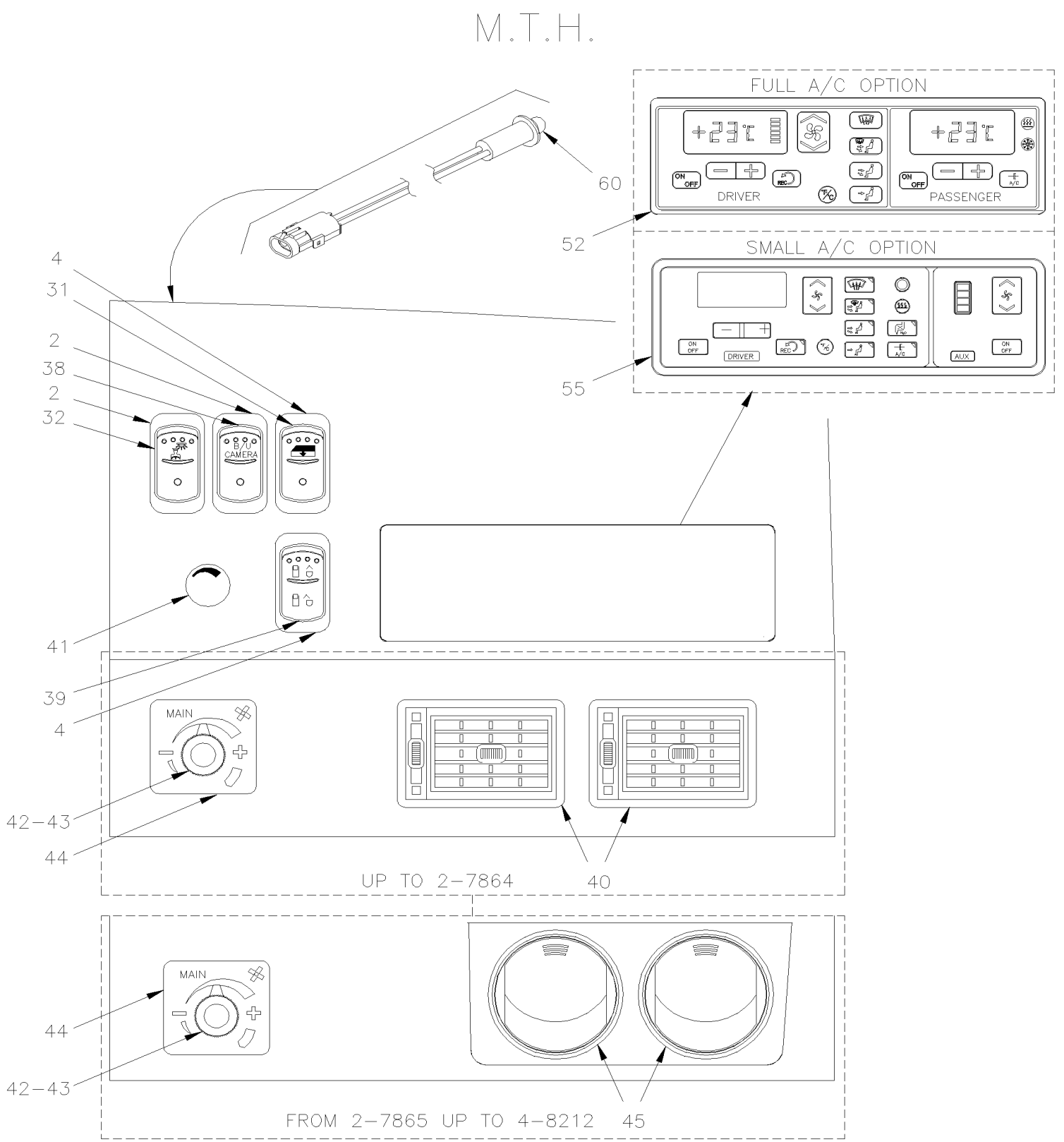

From Y-7046 To 8-9339		Date:07/2024	PAGE:Y2-0645-30
R.H. DASHBOARD PANEL			

M.T.H.

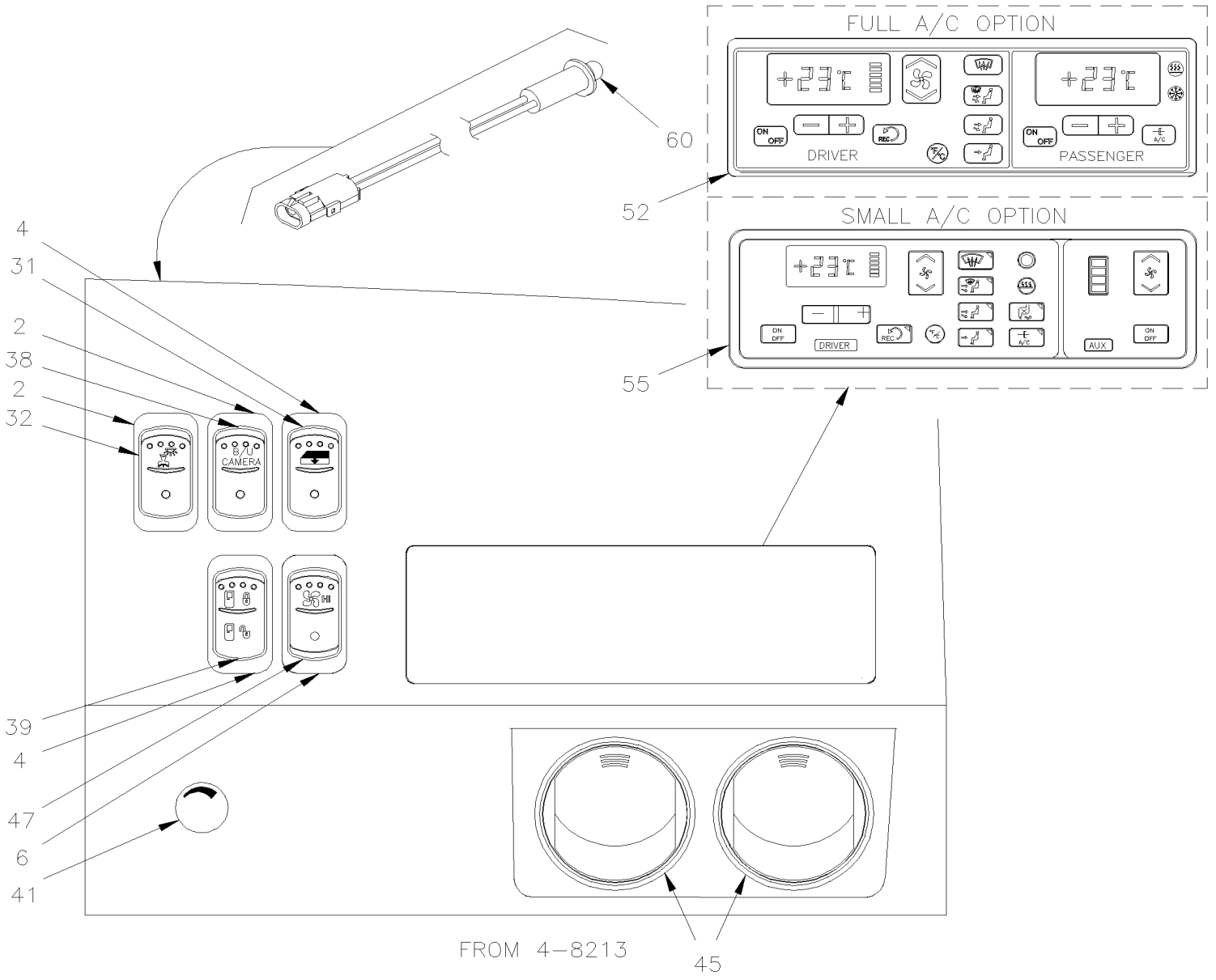

From Y-7046 To 8-9339		Date:07/2024	PAGE:Y2-0645-30

R.H. DASHBOARD PANEL

Item#	Part	Description	XLII 45	XLII MTH40	XLII MTH45	XLII MTH45E	NOTES
1	562696	SWITCH / OFF-ON-ON SERIES S.P.D.T. / W/RED & GREEN LED	AR	AR	AR	AR	
2	562697	SWITCH / ON-ON / D.P.D.T. / CH-OVER / W/RED & GREEN LED	AR	AR	AR	AR	
4	562699	SWITCH / M/ON-OFF-M/ON / D.P.D.T. / W/GREEN LED	1	1	1	1	
NS	562773	SWITCH / "DUMMY" / PLUG	AR	AR	AR	AR	
NS	562763	CONNECTOR RH 10C / SWITCH / NGR 28-5637-2	AR	AR	AR	AR	
NS	562768	SOCKET TERMINAL / 16-14 / PED 12015870	AR	AR	AR	AR	
5	563012	SWITCH / ON-ON / D.P.D.T. / CH-OVER / W/GREEN LED	1				
6	562854	SWITCH / ON-ON / D.P.D.T. / CH-OVER / W/RED LED From 4-8213		1	1	1	
30	562941	CAP / FRONT CAMERA	1				
31	562740	CAP / WINDOW DRIVER'S		1	1	1	
32	562716	CAP / DRIVER'S LAMP	1	1	1	1	
33	562717	CAP / INTERIOR LIGHT	1				
34	562718	CAP / READING LAMP	1				
35	562720	CAP / PARCEL RACK VENTILATION	1				A
36	562721	CAP / GALLEY	1				
37	562719	CAP / HOSTESS BELL	1				
38	562786	CAP / BACK-UP CAMERA	1				
39	562831	CAP / DOOR LOCK	1	1	1	1	
40	871106	LOUVER, ADJUSTABLE To 2-7864	2	2	2	2	
41	562846	KNOB / DASH ILLUMINATION	1	1	1	1	
NS	562845	RHEOSTAT / DASH ILLUMINATION	1	1	1	1	
NS	1212770	. NUT RND SLT BK M8-.75	1	1	1	1	
42	063661	RHEOSTAT BLOWER SPEED CONTROL To 4-8212		1	1	1	
43	505306	KNOB, POINTER To 4-8212		1	1	1	
44	392021	DECAL FAN EVAPORATOR SPEED To 4-8212		1	1	1	
45	871314	LOUVER, ADJUSTABLE / ROUND 2 5/8" O.D. From 2-7865	1			1	
45	871315	LOUVER, ADJUSTABLE / ROUND 2 1/8" O.D. From 2-7865		1	1		
47	563278	CAP / HI SPEED MAIN VENTILATION From 4-8213		1	1	1	
50	900803	CONTROL HEAD / "R.E.I." SYSTEM 2000	1				
. NS	563064	. BULB (CONTROL HEAD GREEN) / 12VOLTS / 2700	1				
NS	563064	. BULB (CONTROL HEAD GREEN) / 12VOLTS / 2700	AR				
NS	404571	CABLE ASSY / DASH & PARCEL RACK To 6-8797	1				
NS	409149	CABLE ASSY / DASH & PARCEL RACK / AUDIO From 6-8798	1				
51	**Y2-2315-00**	**SOUND SYSTEM & ACCESSORIES - "R.E.I."**					
52	871171	A/C CONTROL MODULE To Y-7267	1	1	1	1	
52	871200	A/C CONTROL MODULE From Y-7268 To 1-7493	1	1	1	1	C
52	871201	KIT RETROFIT SENSOR BOX W/PROTECTOR WITH LARGE A/C SYSTEM XL-II To 1-7493	1	1	1	1	
. NS	871214	. A/C CONTROL MODULE To 1-7493	1	1	1	1	
. . NS	MI04-14C	. . SEE MAINTENANCE INFORMATION To 1-7493	1	1	1	1	
. NS	065328	. CABLE ASSY To 1-7493	1	1	1	1	
. NS	563063	. SENSOR THERMISTOR ASSY / TEMPERATURE / ("DELPHI") To 1-7493	1	1	1	1	
. NS	373792	. BOX SENSOR PROTECTOR To 1-7493	1	1	1	1	

From Y-7046 To 8-9339		Date:07/2024	PAGE:Y2-0645-30

R.H. DASHBOARD PANEL

Item#	Part	Description	XLII 45	XLII MTH40	XLII MTH45	XLII MTH45E	NOTES
. NS	373793	. ADAPTOR SENSOR BOX To 1-7493	1	1	1	1	
. NS	373802	. HOSE To 1-7493	1	1	1	1	
. NS	065302	. CABLE ASSY SENSOR EXTENTION To 1-7493	1	1	1	1	
. NS	500638	. SCREW TP PAN PH #8x1/2 Z050 To 1-7493	4	4	4	4	
. NS	504637	. CABLE TIE / 3/16" x 13" To 1-7493	4	4	4	4	
52	871214	A/C CONTROL MODULE From 1-7494 To 5-8487	1	1	1	1	
. NS	MI04-14C	. SEE MAINTENANCE INFORMATION From 1-7494 To 5-8487	1	1	1	1	
52	871373	A/C CONTROL MODULE From 5-8488	1				
52	871373	A/C CONTROL MODULE From 5-8488 To 7-9095		1	1	1	
52	871350	A/C CONTROL MODULE / W/MUX From 7-9096			1	1	
52	563026	SENSOR THERMISTOR ASSY ("KEYSTONE") To 1-7493	2	2	2	2	B
52	563063	SENSOR THERMISTOR ASSY / TEMPERATURE / ("DELPHI") From 1-7494	2	2	2	2	B
52	**IS19923**	**HVAC MODULE REPLACEMENT To 7-9095**	1	1	1	1	
53	562801	SWITCH / DOOR CLOSE To Y-7178	1				
53	563043	SWITCH / DOOR CLOSE From Y-7179 To 3-7926	1				
53	563084	SWITCH / DOOR CLOSE From 3-7927 To 5-8578	1				
53	563578	SWITCH / DOOR CLOSE From 5-8579	1				
53	562810	INSERT / DOOR CLOSE	1				
54	562802	SWITCH / DOOR OPEN To Y-7178	1				
54	563044	SWITCH / DOOR OPEN From Y-7179 To 3-7926	1				
54	563085	SWITCH / DOOR OPEN From 3-7927 To 5-8578	1				
54	563579	SWITCH / DOOR OPEN From 5-8579	1				
54	562830	INSERT / DOOR OPEN	1				
55	871170	A/C CONTROL MODULE / W/SMALL A/C SYSTEM To 1-7547		1	1	1	D
55	871248	KIT RETROFIT SENSOR BOX W/PROTECTOR WITH SMALL A/C SYSTEM XL-II To 1-7457		AR	AR	AR	
. NS	IS-00093	. SEE INSTRUCTION SHEET To 1-7457		1	1	1	
. NS	871212	. A/C CONTROL MODULE / W/SMALL A/C SYSTEM To 1-7457		1	1	1	
. NS	065328	. CABLE ASSY To 1-7457		1	1	1	
. NS	563063	. SENSOR THERMISTOR ASSY / TEMPERATURE / ("DELPHI") To 1-7457		1	1	1	
. NS	373792	. BOX SENSOR PROTECTOR To 1-7457		1	1	1	
. NS	373793	. ADAPTOR SENSOR BOX To 1-7457		1	1	1	
. NS	373802	. HOSE To 1-7457		1	1	1	
. NS	065302	. CABLE ASSY SENSOR EXTENTION To 1-7457		1	1	1	
. NS	500638	. SCREW TP PAN PH #8x1/2 Z050 To 1-7457		4	4	4	
. NS	504637	. CABLE TIE / 3/16" x 13" To 1-7457		4	4	4	
55	871212	A/C CONTROL MODULE / W/SMALL A/C SYSTEM From 1-7548 To 7-9095		1	1	1	
55	871417	A/C CONTROL MODULE / W/SMALL A/C SYSTEM From 7-9096			1	1	
60	330238	TELLTALE ASSY / RED		1	1	1	
		A) WE USE #562699 SWITCH AND RESISTOR #562908					

From Y-7046 To 8-9339		Date:07/2024	PAGE:Y2-0645-30

R.H. DASHBOARD PANEL

Item#	Part	Description	XLII 45	XLII MTH40	XLII MTH45	XLII MTH45E	NOTES
		B) USE IN PASSENGER'S RETURN AIR BOX UNDER PASSENGER'S SEAT & DRIVER'S KNEE					
		C) FOR PRODUCT IMPROVMENT ASK FOR KIT #871201					
		D) FOT PRODUCT IMPROVMENT ASK FOR KIT #871248 (SEE WB0034)					

To 7-9095		Date:07/2024	PAGE:IS19923
HVAC MODULE REPLACEMENT			

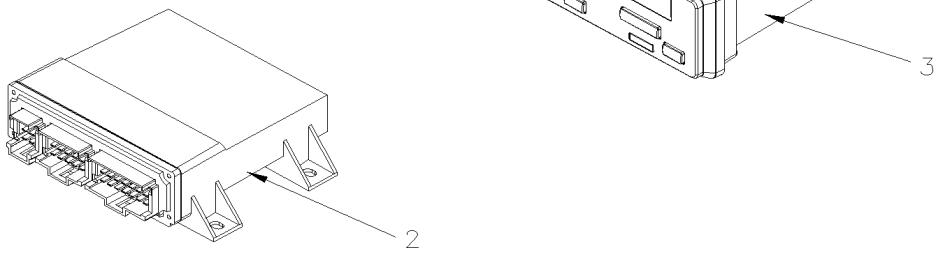

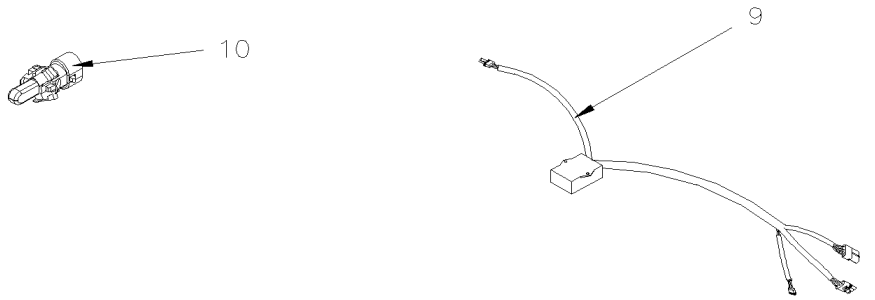

To 7-9095		Date:07/2024	PAGE:IS19923

HVAC MODULE REPLACEMENT

Item#	Part	Description	XLII 45	XLII MTH40	XLII MTH45	XLII MTH45E	NOTES
NS	23499009-FAC	PROGRAMMED MCM # HVAC MODULE	1	1	1	1	
2	22722846	I/O A E-MODULE VOLVO MULTIPLEX	1	1	1	1	
3	870008	A/C CONTROL MODULE	1	1	1	1	
NS	0600035	HVAC INTERFACE HARNESS WITH HVAC	1	1	1	1	
NS	0600036	OUTSIDE TEMPERATURE SENSOR HARNESS	1	1	1	1	
NS	0600037	DUAL TO SINGLE MOTOR WIRING ADAPTOR	1	1	1	1	
NS	0600038	SINGLE MOTOR DRIVE HARNESS	1	1	1	1	
NS	0600039	DUAL MOTOR DRIVE HARNESS	1	1	1	1	
9	871353	MODULE CONTROL FAN SPEED / W/DOUBLE MOTOR	1	1	1	1	
10	563335	SENSOR THERMISTOR ASSY / OUTSIDE / / PED 15416387	1	1	1	1	
NS	563332	RELAY 24V S.P.D.T. W/RESISTOR / "VOLVO" (20374662)	2	2	2	2	
NS	504637	CABLE TIE / 3/16" x 13"	15	15	15	15	
NS	5001374	SCREW CAP HEX M5-0.8x10 SS	3	3	3	3	
NS	5001449	NUT HEX M5-0.8 SS	3	3	3	3	
NS	5001480	NUT HEX NYRT #8-32 SS	1	1	1	1	
NS	IS-19923	SEE INSTRUCTION SHEET	1	1	1	1	

From Y-7046 To 6-8906		Date:07/2024	PAGE:Y2-0650-10
TACHOGRAPH - INSTALLATION			

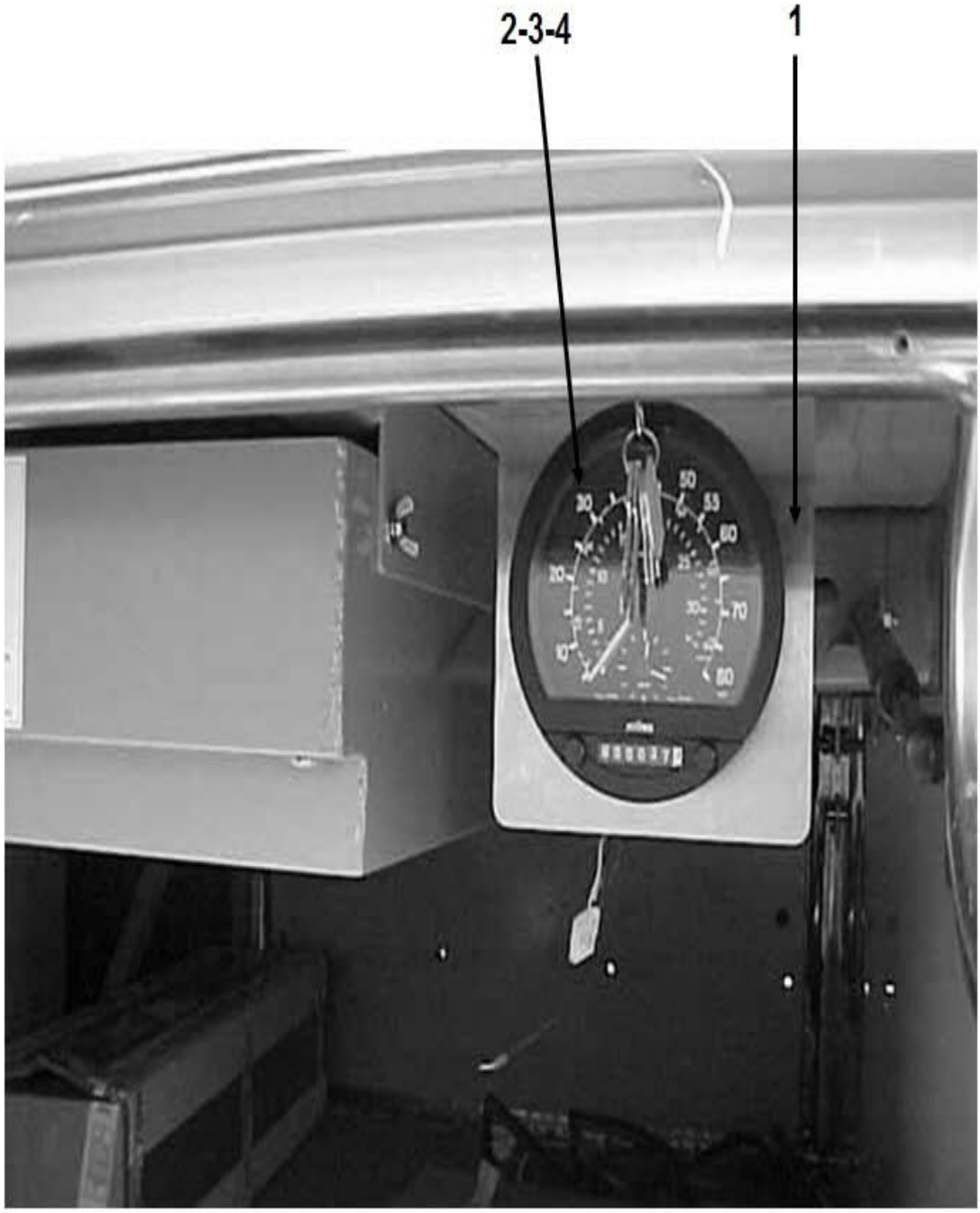

From Y-7046 To 6-8906		Date:07/2024	PAGE:Y2-0650-10

TACHOGRAPH - INSTALLATION

Item#	Part	Description	XLII 45	XLII MTH40	XLII MTH45	XLII MTH45E	NOTES
1	065455	SUPPORT / TO FIX HEAD	1				
NS	500642	SCREW TP PAN PH #10x3/4 Z050	3				
2	090195	MODULE ASSY / W/TACHOGRAPH W/4 WIRES	1				
3	590259	TACHOGRAPH ASSY / MPH / W/4 WIRES	1				
3	590258	TACHOGRAPH ASSY / KM/H / W/4 WIRES	1				
NS	561006	. BULB / 1WATT-24VOLTS / SAE# 2741MF	3				
NS	590236	. KEY	1				
NS	590270	BRACKET	2				
NS	590235	NUT KNURLED	2				
4	064669	CABLE ASSY	1				
5	590179	CHART KM/H	AR				
5	590122	CHART MPH	AR				
5	590251	CHART DUMMY PROTECTOR	AR				

From Y-7046 To 7-9095		Date:07/2024	PAGE:Y2-0650-50
KEYLESS MODULE			

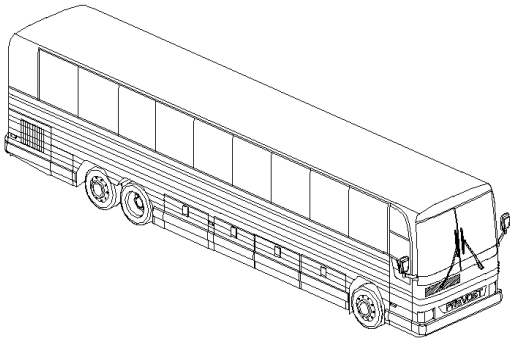

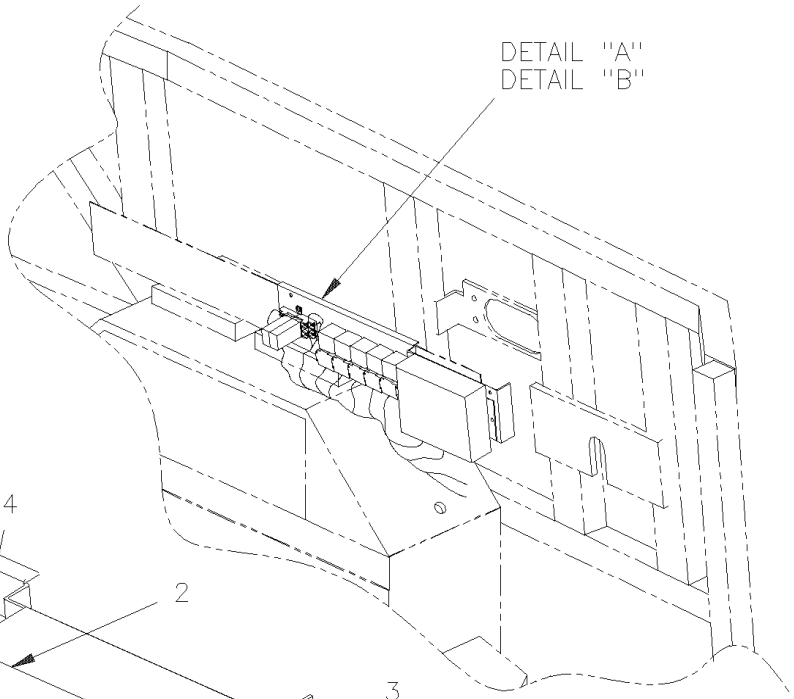

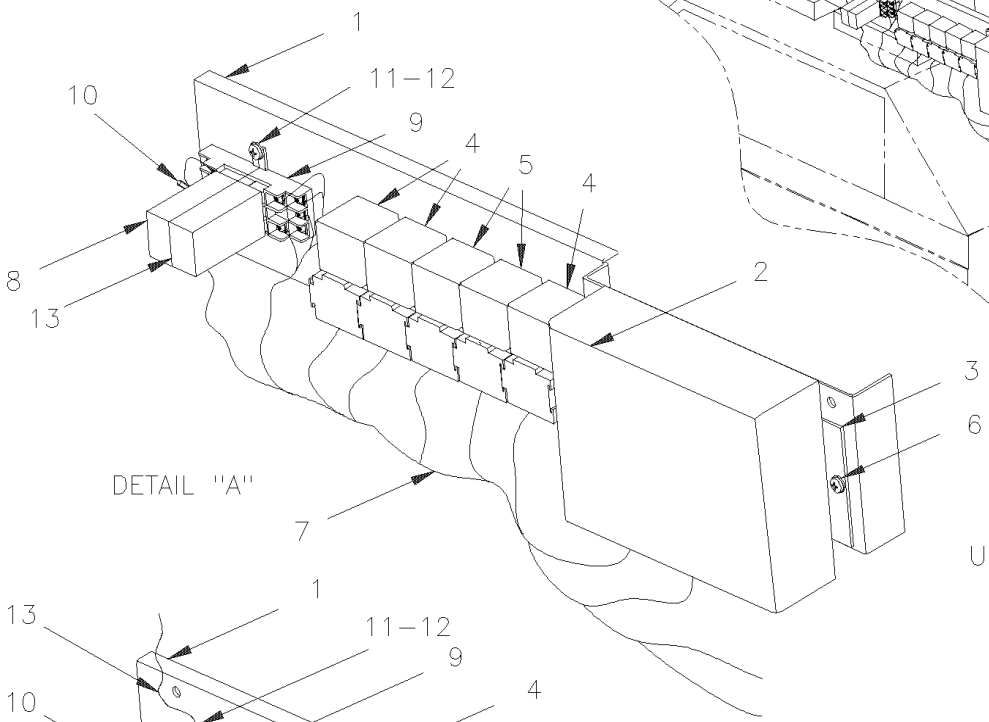

DETAIL "A"

UP TO 1–7411

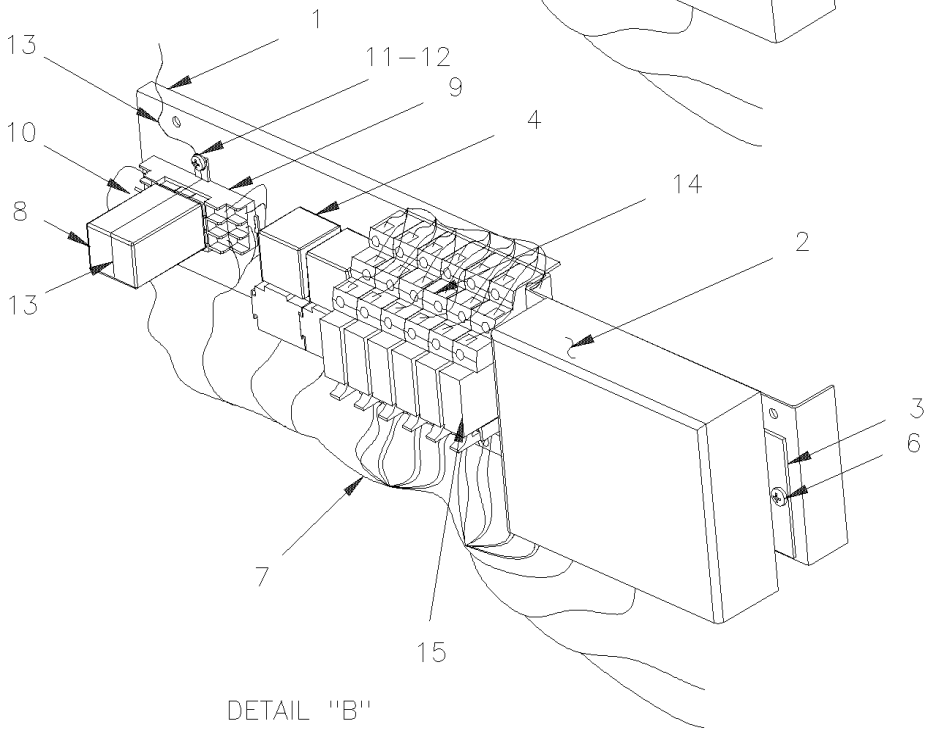

DETAIL "B"

FROM 1–7412

From Y-7046 To 7-9095		Date:07/2024	PAGE:Y2-0650-50

KEYLESS MODULE

Item#	Part	Description	XLII 45	XLII MTH40	XLII MTH45	XLII MTH45E	NOTES
	381907	KEYLESS MODULE ASSY To 1-7411		1	1	1	
	381973	KEYLESS MODULE ASSY / MTH XL From 1-7412 To 4-8285		1	1	1	
	382319	KEYLESS MODULE ASSY / MTH XL From 4-8286 To 5-8517		1	1	1	
	382327	KEYLESS MODULE ASSY / MTH XL From 5-8518		1	1	1	
1	381930	. SUPPORT KEYLESS MODULE To 1-7411		1	1	1	
1	381974	. SUPPORT KEYLESS MODULE From 1-7412		1	1	1	
2	562673	. KEYLESS MODULE / 50' RANGE To 4-8285		1	1	1	S
. NS	IS-03103	. . SEE INSTRUCTION SHEET To 4-8285		1	1	1	S
2	563541	. KEYLESS MODULE / 350' RANGE From 4-8286		1	1	1	
3	064494	. SUPPORT MODULE		2	2	2	
4	562092	. RELAY 12V S.P.D.T. W/DIODE / To 5-8577		3	3	3	
4	563337	. RELAY 12V S.P.D.T. W/RESISTOR / From 5-8578		3	3	3	
5	561707	. RELAY 24V S.P.D.T. W/RESISTOR / To 5-0142		2	2	2	
5	563332	. RELAY 24V S.P.D.T. W/RESISTOR / "VOLVO" (20374662) From 5-0143		2	2	2	
6	500582	. SCREW TP PAN PH #8x3/8 Z050		4	4	4	
7	064817	. WIRING HARNESS KEYLESS MODULE To 1-7411		1	1	1	
7	065382	. WIRING HARNESS KEYLESS MODULE From 1-7412 To 2-7799		1	1	1	
7	065549	. WIRING HARNESS KEYLESS MODULE From 2-7800 To 5-8517		1	1	1	
7	066399	. WIRING HARNESS KEYLESS MODULE From 5-8518 To 5-8609		1	1	1	
7	066309	. WIRING HARNESS KEYLESS MODULE From 5-8610		1	1	1	
8	562341	. RELAY, TIME DELAY RELAY - OFF To 5-8517		1	1	1	
8	067982	. KIT RETROFIT TIME DELAY RELAY To 5-8517					
. NS	563584	. . RELAY, TIME DELAY RELAY - OFF / 30 SEC To 5-8517		1	1	1	
. NS	561183	. . RELAY BASE / TAB TERMINAL / BOSCH 3334485008 To 5-8517		1	1	1	
. NS	561108	. . TAB RECEPTACLE TERMINAL / 18-14 / AMP 42238-2 To 5-8517		4	4	4	
8	563584	. RELAY, TIME DELAY RELAY - OFF / 30 SEC From 5-8518		1	1	1	R
9	562340	. BASE SOCKET		1	1	1	
10	560805	. RESISTOR / 470 OHMS / 1/2W		2	2	2	
11	500640	. SCREW TP PAN PH #6x3/4 Z050		2	2	2	
12	502630	. WASHER FL .156x.375x.049 Z050		2	2	2	
13	560920	. SPRING HOLDER		1	1	1	
14	563055	. BASE RELAY From 1-7412		7	7	7	
15	563054	. RELAY 12V S.P.D.T. From 1-7412		7	7	7	
NS	065541	KIT KEYLESS MODULE To 1-7411		AR	AR	AR	
. NS	IS-00053A	. SEE INSTRUCTION SHEET To 1-7411		1	1	1	
		R) SEE ATTACHMENT DOCUMENT 2004093					
		S) WHEN YOU REPLACE MODULE 562673 BY THE NEW 563541 YOU NEED TO REPLACE KEYLESS 562674 WITH THE NEW 563542 / SEE INSTRUCTION SHEET IS-03103					

From Y-7046 To 8-9339		Date:07/2024	PAGE:Y2-0655-00
INTERIOR LIGHTING			

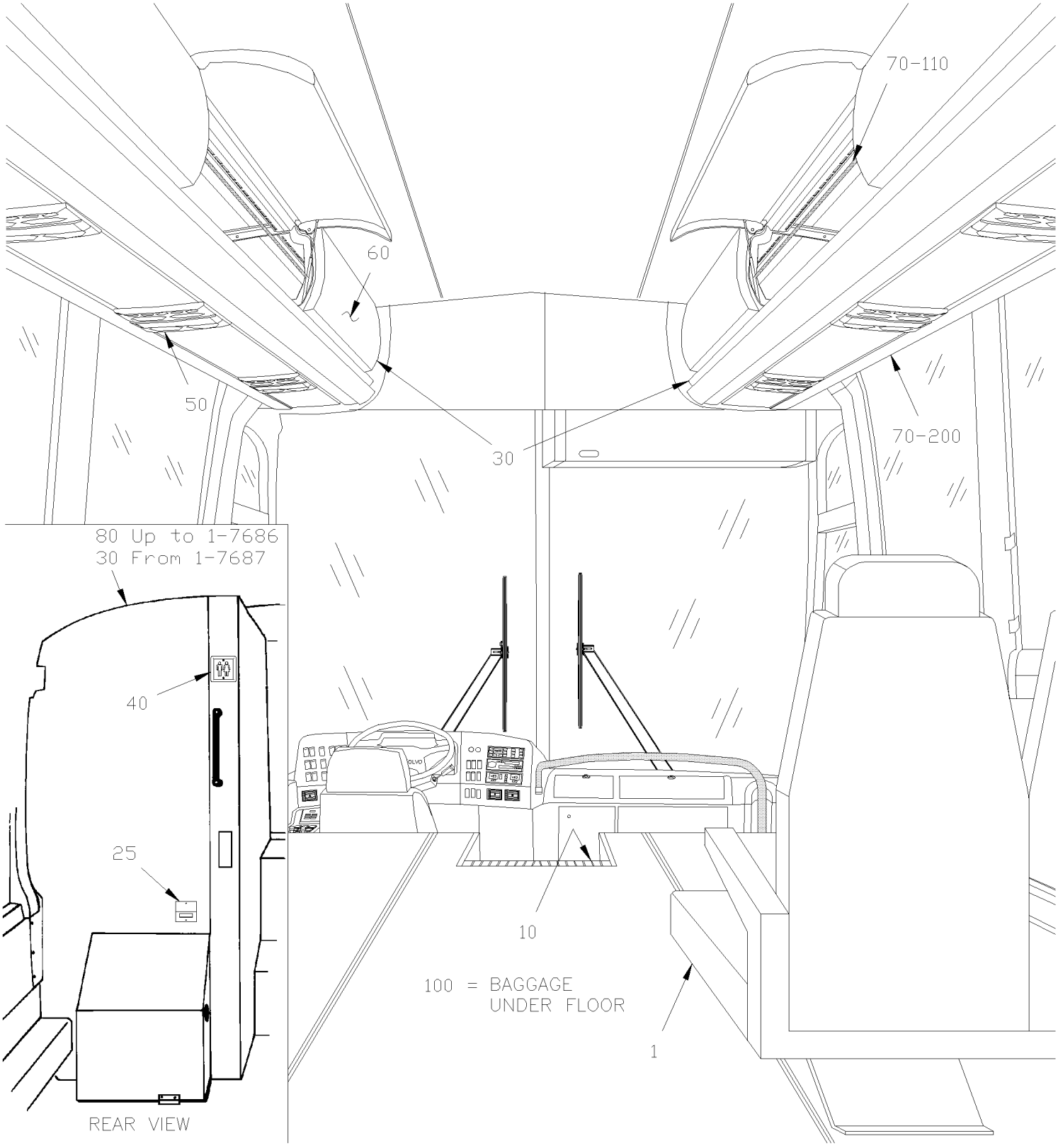

From Y-7046 To 8-9339		Date:07/2024	PAGE:Y2-0655-00
INTERIOR LIGHTING			

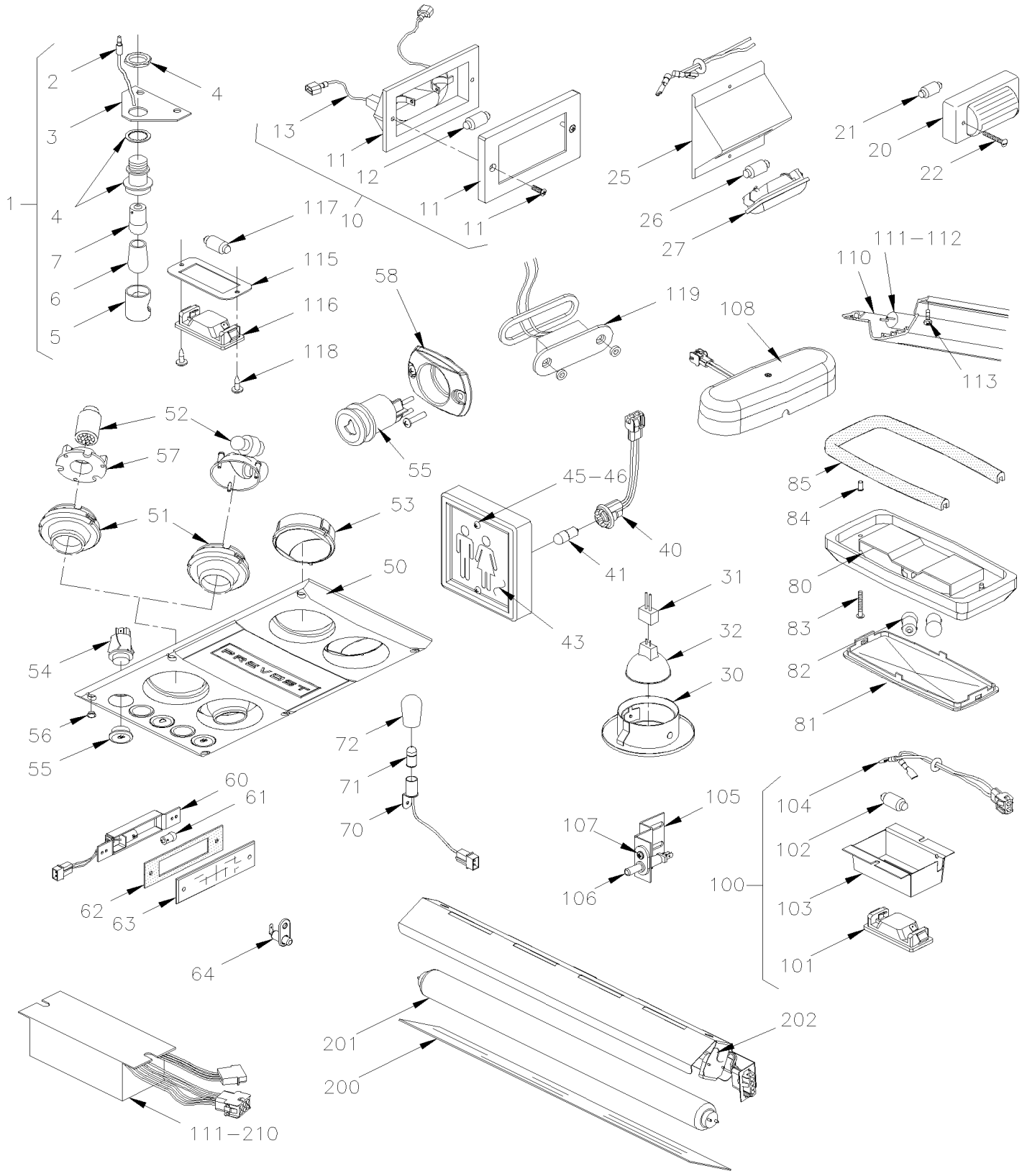

From Y-7046 To 8-9339		Date:07/2024	PAGE:Y2-0655-00

INTERIOR LIGHTING

Item#	Part	Description	XLII 45	XLII MTH40	XLII MTH45	XLII MTH45E	NOTES
		AISLE LAMP - UNDER PASSENGER'S SEAT					
1	330146	LAMP ASSY / UNDER SEAT W/BULB To 5-8416	AR				
1	330367	LAMP ASSY / UNDER SEAT W/LED From 5-8417	AR				
2	560098	. TERMINAL SNAP PLUG / 16-14 / INSULATED / AMP 2-324225-1	1				
3	361343	. SUPPORT	1				
4	830096	. LAMP	1				
5	830113	. . CAP PROTECTOR	1				
6	560940	. BULB COVERING / BLUE To 5-8416	1				
7	560141	. BULB / 3WATT-24VOLTS / SAE# 1251 To 5-8416	1				
7	563546	. BULB / 7 LEDS BLUE / UNDER SEAT / #B607-2PB-028W From 5-8417	1				
7	564100	. BULB / 7 LEDS BLUE / UNDER SEAT / #270015	1				
NS	061310	CABLE ASSY / LIGHT & MAIN CABLE	AR				
		STEPWELL LAMP					
10	330279	LAMP ASSY 24V W/BULB	2				
. NS	830142	. LAMP	1				
. NS	562278	. BULB / 10WATT-24VOLTS / SAE# 6429	1				
10	830197	LAMP ASSY 24V LEDS	2				
NS	068140	CABLE INTERFACE 330279 TO 830197	AR				
12	562278	. BULB / 10WATT-24VOLTS / SAE# 6429	1				
13	561904	TAB TERMINAL INSULATION NYLON / 22-18 / AMP 2-520103-2	2				
NS	500148	SCREW MA RND PH #6-32x1/2 SS	AR				
NS	500422	NUT SPR U #6-32 .110-.120 SS	AR				
		GALLEY & WASTE CONTAINER LAMP					
20	830124	LAMP ASSY	1				
21	562278	BULB / 10WATT-24VOLTS / SAE# 6429	1				
21	562305	BULB / 5WATT-12VOLTS / SAE# 6413	AR				
22	500613	SCREW TP PAN PH #10x1/2 Z050	2				
25	327378	LAMP SUPPORT To 5-8592	1				
26	562278	BULB / 10WATT-24VOLTS / SAE# 6429 To 5-8592	1				
27	830139	LAMP ASSY / W/ONE BULB To 5-8592	1				
27	066480	KIT, REPLACEMENT WASTE CONTAINER NIGHT LIGHT	1				
27	065350	WIRING HARNESS ENGINE COMPARTMENT To 5-8592	1				
		LAVATORY LAMP / FROM 1-7687					
		DRIVER'S LAMP					
30	830150	LAMP BASE To 2-7892	2	2	2	2	

From Y-7046 To 8-9339		Date:07/2024	PAGE:Y2-0655-00

INTERIOR LIGHTING

Item#	Part	Description	XLII 45	XLII MTH40	XLII MTH45	XLII MTH45E	NOTES
30	830179	LAMP BASE From 2-7893	2	2	2	2	
31	562803	CONNECTOR / SOCKET HOUSING ASSY / LEECRAFT QBL-12	1	1	1	1	
32	830151	BULB / 35 WATTS12V/SAE# Q35MR16/SP20D To 1-7686	2	2	2	2	
32	830176	BULB / 20 WATTS-12V/SAE#Q20MR16/FL40D From 1-7687	1	1	1	1	
		LAVATORY LAMP (OCCUPIED)					
40	330342	BASE ASSY W/SOCKET & BULB 24V / LIGHT GREY To 2-7922	1	1	1	1	
40	330360	BASE ASSY W/SOCKET & BULB 12V / LIGHT GREY From 2-7923	1	1	1	1	
NS	330265	. SOCKET ASSY W/CONNECTOR / W2.1x9.Dd	1				
. NS	562295	. . SOCKET BULB / PLASTIC W/WIRE / W2.1x9.5d	1				
. NS	561248	. . CONNECTOR / UNIVERSAL MATE-N-LOK / PH 2C / AMP 1-480699-0	1				
. NS	562122	. . PIN TERMINAL / 20-14 / AMP 350547-1	2				
41	561166	. BULB / 3WATT-24VOLTS / SAE# 464 To 2-7922	1				
41	563108	. BULB / 3WATT-12VOLTS / SAE# 168 From 2-7923	1				
42	330341	. BASE BOX, LAMP / LIGHT GREY	1				
43	403137	LENS	1				
45	500504	SCREW TC OV PH #6-32x1/2 BK	2				
46	500422	NUT SPR U #6-32 .110-.120 SS	2				
		READING LIGHT					
50	830149	MODULE ASSY WITH LAMP AND AIR DIFFUSOR To 2-7770	AR				BS
50	830174	MODULE ASSY WITH LAMP AND AIR DIFFUSOR From 2-7771 To 2-7879	1				BS
50	830178	MODULE ASSY WITH LAMP AND AIR DIFFUSOR From 2-7880	1				BS
50	330366	MODULE ASSY WITH LEDS LAMP, AIR DIFFUSOR From 4-8291	1				
50	830170	MODULE ASSY W/OUT LAMP AND W/AIR DIFFUSOR To 2-7770	1				B
50	830175	MODULE ASSY W/OUT LAMP AND W/AIR DIFFUSOR From 2-7771	1				B
NS	065387	CABLE	1				B
51	830156	. READING LAMP ASSY W/RFLECTOR LENS & CLIP	2				C
NS	830172	. . REFLECTOR ASSY W/CLIP	1				C
NS	830169	. . . CLIP SOKET RETAINER	1				C
52	563073	. BULB / 7 WATT-24VOLTS / SAE# 64479 To 2-7879	2				C
52	563260	. BULB / 6WATT-24VOLTS / SAE# 303 From 2-7880	1				C
52	563349	. BULB / 12 LEDS / READING LIGHT 24VOLTS / #B612-0WW-024S	1				
52	563630	. BULB / 12 LEDS / READING LIGHT 24VOLTS / #270017	1				
53	830157	. AIR DIFFUSOR	2				
54	830158	. SWITCH / OFF-ON / S.P.S.T. / READING LIGHT	2				WCL
55	830159	. SWITCH / OFF-M/ON / S.P.S.T. / CHIME	1				WCL
56	830160	. PLUG COVER SCREW	6				
56	065044	DIODE ASSY	1				A
NS	5001439	SCREW TP OV PH #6x5/8 BK	4				

From Y-7046 To 8-9339		Date:07/2024	PAGE:Y2-0655-00

INTERIOR LIGHTING

Item#	Part	Description	XLII 45	XLII MTH40	XLII MTH45	XLII MTH45E	NOTES
NS	830164	TOOL / LENS REMOVER READING LIGHT	AR				
57	830180	SUPPORT / 12 LEDS BULB	2				
58	409259	PROTECTOR SWITCH / CAP	AR				WCL
. NS	288728	. REINFORCMENT FOR SCREW PROTECTOR CAP	1				WCL
58	500814	SCREW TP BDG PH #6x3/4 BK	2				WCL
		PARCEL RACK - INTERIOR LIGHT					
60	430314	LAMP ASSY	AR				
60	430313	. BOX	1				
60	561556	. SOCKET BULB / METAL W/2 WIRES / BA9s / LEECRAFT B22Q2	1				
60	504462	. SNAP BUSHING / .187x.375x.312	1				
60	560853	. PIN TERMINAL / 24-18 / AMP 60618-1	2				
60	560900	. CONNECTOR / COM. MATE-N-LOCK / PH 2C / AMP 1-480319-0	1				
60	504109	. RIVET POP DOME OE 5/32x3/16 AL	2				
61	560144	BULB / 1.6WATT-24VOLTS / SAE# 1820	AR				
62	430316	SEAL	1				
63	430312	LENS	2				
NS	500124	SCREW TP TR PH #8x1/2 SS	1				
64	561563	SWITCH / S.P.S.T. / N.C.	1				
		EMERGENCY EXIT LAMP - LOCATED					
		UPPER OF SIDE WINDOW					
70	330217	SOCKET ASSY	AR				
71	560601	BULB / 2WATT-24VOLTS / SAE# 456	AR				
71	560623	BULB / 3.5WATT-24VOLTS / SAE# 313	AR				
72	560942	BULB COVERING / BLUE	AR				
NS	500648	SCREW TC BDG PH #6-32x1/4 ZP	AR				
NS	500438	WASHER FL .187x.437x.050 Z050	AR				
		LAVATORY LAMP / UP TO 1-7686					
80	830110	LAMP ASSY	1				
81	830125	LENS	1				
82	563010	BULB / 16WATT-24VOLTS / SAE# 1308	1				
83	500654	SCREW TC BDG PH #8-32x1/2 Z050	1				
84	500678	NUT WELL #8-32x.450	1				
85	506025	RUBBER CHANNEL / 1/18" x 5/16" INT "U" SHAPE / SQUARE C.T.L.	1				
		BAGGAGE & SERVICE DOOR					

From Y-7046 To 8-9339		Date:07/2024	PAGE:Y2-0655-00

INTERIOR LIGHTING

Item#	Part	Description	XLII 45	XLII MTH40	XLII MTH45	XLII MTH45E	NOTES
100	330268	LAMP ASSY 24V / BAGGAGE COMPARTMENT LAMP / W/ONE BULB 10W To 5-8421	AR	AR	AR	AR	
100	330370	LAMP ASSY 24V / BAGGAGE COMPARTMENT LAMP / W/2 BULB 10W From 5-8422 To 5-8673	AR	AR	AR	AR	
100	330372	LAMP ASSY 24V / BAGGAGE COMPARTMENT LAMP W//2 BULBS 5W From 5-8674 To 7-9224	AR	AR	AR	AR	
101	830139	. LAMP ASSY / W/ONE BULB To 5-8421	1	1	1	1	
101	830183	. LAMP ASSY / W/2 BULBS From 5-8422 To 7-9224	1	1	1	1	
102	562278	. BULB / 10WATT-24VOLTS / SAE# 6429 To 5-8421	AR	AR	AR	AR	
102	562411	. BULB / 5WATT-24VOLTS / SAE # 6424 From 5-8422 To 7-9224	2	2	2	2	
103	330267	. SUPPORT / SS / TO FIX LAMP / W/ONE BULB To 5-8421	1	1	1	1	
103	330369	. SUPPORT / SS / TO FIX LAMP / W/2 BULBS From 5-8422 To 7-9224	1	1	1	1	
104	063435	. CABLE ASSY / W/ONE BULB To 5-8421	1	1	1	1	
104	066271	. CABLE ASSY / W/2 BULBS From 5-8422 To 7-9224	1	1	1	1	
NS	504273	. CABLE TIE / 1/8" X 3"1/2 To 7-9224	1	1	1	1	
105	064278	CABLE ASSY / TO ADD MORE LAMP IN BAGGAGE COMPARTMENT	8	8	8	8	
105	064167	SWITCH ASSY / BAGGAGE COMPARTMENT To 5-8788	1	1	1	1	
105	066533	SWITCH ASSY / BAGGAGE COMPARTMENT From 5-8789	1	1	1	1	
105	063434	SWITCH SUPPORT / W/BAGGAGE DOORS STD To 5-8788	1	1	1	1	
105	066639	SWITCH SUPPORT / W/BAGGAGE DOORS STD From 5-8789	1	1	1	1	
106	562303	SWITCH / S.P.S.T. / N.C. To 5-8788	1	1	1	1	
106	563464	SWITCH / S.P.S.T. / N.C. / W/RUBBER BOOT From 5-8789	1	1	1	1	
107	500613	SCREW TP PAN PH #10x1/2 Z050	1	1	1	1	
107	500022	WASHER LO INT .168x.340x.023 Z050	1	1	1	1	
108	330224	LAMP ASSY 24V / BAGGAGE COMPARTMENT LAMP W/2 BULBS G4-10W From 7-9225	AR	AR	AR	AR	
. NS	330396	. BULB / 10 WATTS -28VOLTS / SAE# G4-28 From 7-9225	2	2	2	2	
		FRONT PARCEL RACK FLUORESCENT					
110	312445	LIGHTING MODULE / W/TUBE 1590MM	12				D
110	312450	LIGHTING MODULE / "DUMMY" 779.5MM	2				
110	313256	LIGHTING MODULE / "DUMMY" 1318MM	1				
110	313257	LIGHTING MODULE / "DUMMY" / W/W.C.L. "RICON" / 609MM	1				
110	313460	LIGHTING MODULE / "DUMMY" / W/W.C.L. "RICON" / 424MM	1				
111	830154	BALLAST / 24 VOLTS / TO USE W/830152	AR				
NS	562850	. FUSE / 4 AMPS / GMA-4A	1				
NS	562784	. SOCKET / BIPIN HOLDER / LEVITON 420	AR				
112	830152	TUBE / 13WATT / F13T5CW - 21" / G5 MINI BIPIN	AR				
113	500583	SCREW TP PAN PH #6x1/2 Z050	AR				
		LAVATORY SAFETY LAMP					
115	324944	PLATE To 5-8592	1				
116	830139	LAMP ASSY / W/ONE BULB To 5-8592	1				
117	562278	BULB / 10WATT-24VOLTS / SAE# 6429 To 5-8592	1				

From Y-7046 To 8-9339		Date:07/2024	PAGE:Y2-0655-00

INTERIOR LIGHTING

Item#	Part	Description	XLII 45	XLII MTH40	XLII MTH45	XLII MTH45E	NOTES
NS	064031	CABLE ASSY To 5-8592	1				
118	500641	SCREW TP PAN PH #8x3/4 Z050 To 5-8592	2				
119	066401	KIT, REPLACEMENT LAVATORY NIGHT LIGHT To 5-8592	1				
119	563460	LAMP ASSY "LED" From 5-8593	1				
		FLUORESCENT UNDER PARCEL RACK					
200	312502	LENS 470MM	1				
200	312503	LENS 831MM	1				
200	312501	LENS 1235MM	12				
200	313344	LENS 411MM / W/A/C	1				
200	313345	LENS 800MM / W/A/C	1				
200	313346	LENS 637MM / W/A/C	1				
200	313347	LENS 574MM / W/A/C	1				
201	830153	TUBE / 32WATT / F32T8SPX41 - 48"	AR				
202	330340	SOCKET / TUBE	2				
202	561247	. CONNECTOR / UNIVERSAL MATE-N-LOK / SH 2C / AMP 1-480698-0	1				
202	561514	. SOCKET TERMINAL / 20-14 / AMP 350537-3	2				
202	830145	. SOCKET / BIPIN HOLDER	1				
210	830155	BALLAST / 24 VOLTS / TO USE W/830153	AR				
210	562850	. FUSE / 4 AMPS / GMA-4A	1				
		A) ONLY ON COACH WITH READING LIGHT TEST SWITCH					
		B) ONLY ON COACH W/O READING LAMP ON FIRST SEAT					
		BS) BULB SOCKET IT NOT AVALIABLE FOR REPLACEMENT ASK FOR CHEAPER MODULE # 830178					
		C) FOR PRODUCT IMPROVMENT USE 563349 WITH 830180					
		D) INCLUDE ITEMS # 70 & 111					
		WCL) THIS SWITCH IT ALSO INSTALL ON LOWER WINDOW MOULDING WITH PROTECTOR # 409259 FOR IMPROVEMENT					

From Y-7046 To 4-8358		Date:07/2024	PAGE:Y2-0660-00
HEADLAMP & FRONT DIRECTIONAL LAMPS RECTANGULAR "HALOGENE"			

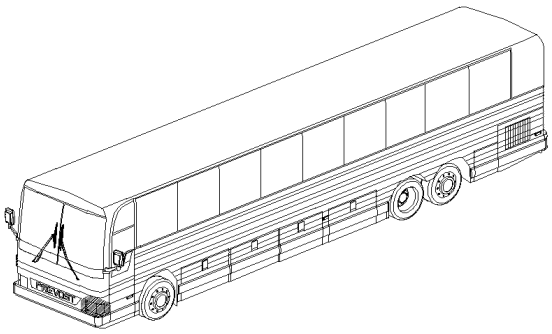

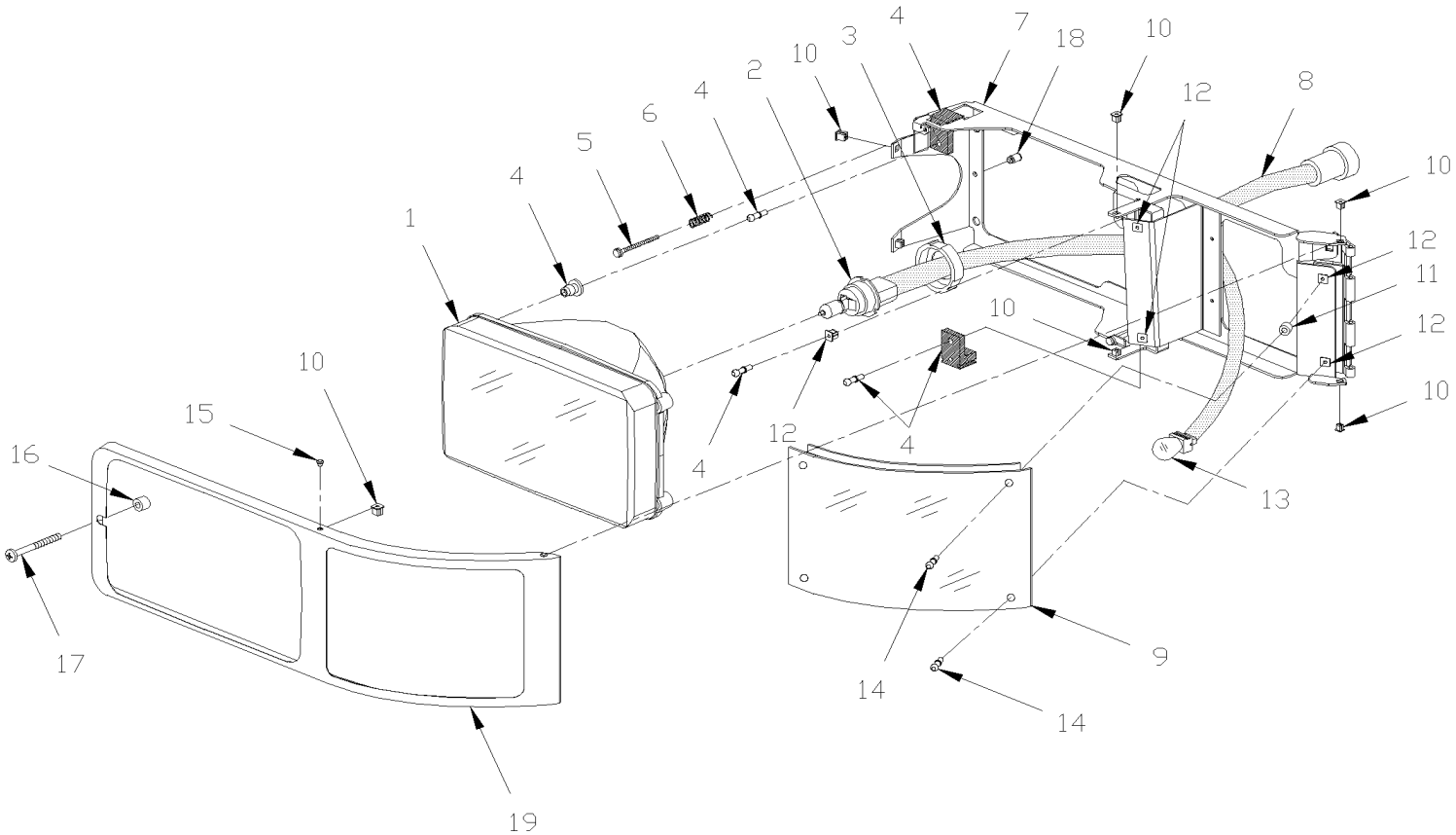

From Y-7046 To 4-8358		Date:07/2024	PAGE:Y2-0660-00

HEADLAMP & FRONT DIRECTIONAL LAMPS RECTANGULAR "HALOGENE"

Item#	Part	Description	XLII 45	XLII MTH40	XLII MTH45	XLII MTH45E	NOTES
	430496P	HEADLAMP & FLASHER ASSY LH					
	430503P	HEADLAMP & FLASHER ASSY RH					
1	930328	. HEADLAMP ASSY WITH BULB	1	1	1	1	
1	21077000	. HEADLAMP ASSY	1	1	1	1	B
1	930354	. . HEADLAMP INSERT	1	1	1	1	
2	930291	. . BULB / 65/45WATT-12VOLTS / SAE# 9004	1	1	1	1	
2	930385	. . BULB / 65/45WATT-12VOLTS / SAE#9004XL	1	1	1	1	
3	930355	. . RETAINER RING	1	1	1	1	
4	930356	. . PIVOT ADJUSTER ASSY	3	3	3	3	
5	930357	. . ADJUSTER SCREW	2	2	2	2	
6	502169	. SPRING COMPRESSION / .240 O.D. x 1.5 x .032	2	2	2	2	
7	430479	. SUPPORT ASSY L.H. (WELDED) To Y-7139	1	1	1	1	
7	430544	. SUPPORT ASSY L.H. (WELDED) From Y-7140	1	1	1	1	
7	430502	. SUPPORT ASSY R.H. (WELDED) To Y-7139	1	1	1	1	
7	430539	. SUPPORT ASSY R.H. (WELDED) From Y-7140	1	1	1	1	
8	064780	. CABLE ASSY / HEADLAMP	1	1	1	1	
NS	504637	. CABLE TIE / 3/16" x 13"	3	3	3	3	
9	930329	. FLASHER L.H.	1	1	1	1	
9	930333	. FLASHER R.H.	1	1	1	1	
10	502741	. NUT AN #8 NYL	6	6	6	6	
11	430537	. SPACER	1	1	1	1	
12	5001052	. NUT AN #10 NYL	5	5	5	5	
13	562135	. BULB / 32/3WATT-12VOLTS / SAE# 3057	1	1	1	1	
14	5001042	. SCREW MA RND PH #10-32x1 1/4 SS	4	4	4	4	
15	500028	. SCREW TC TR PH #8-32x3/8 SS	6	6	6	6	
16	430508	. SPACER	1	1	1	1	
17	5001508	. SCREW CAP BUT HEXS M6-1.0x40 SS	1	1	1	1	
NS	5001507	. SCREW MA PAN PH M6-1.0x20 SS	6	6	6	6	A
18	5001416	. BUMPER RUBBER / 11/16x1/2x3/32	2	2	2	2	
19	430488	. HEADLAMP BEZEL	1	1	1	1	
		A) TO FIX LAMP TO FRONTCAP					
		B) WITH THIS REPLACEMENT HEADLAMP YOU MUST KEEP ONLY THE LENS AND BULB AND DISCARD ALL OTHER PARTS					

From 5-8359 To 8-9339		Date:07/2024	PAGE:Y2-0660-01
HEADLAMP & FRONT DIRECTIONAL LAMPS ROUND "HALOGENE" & "XENON"			

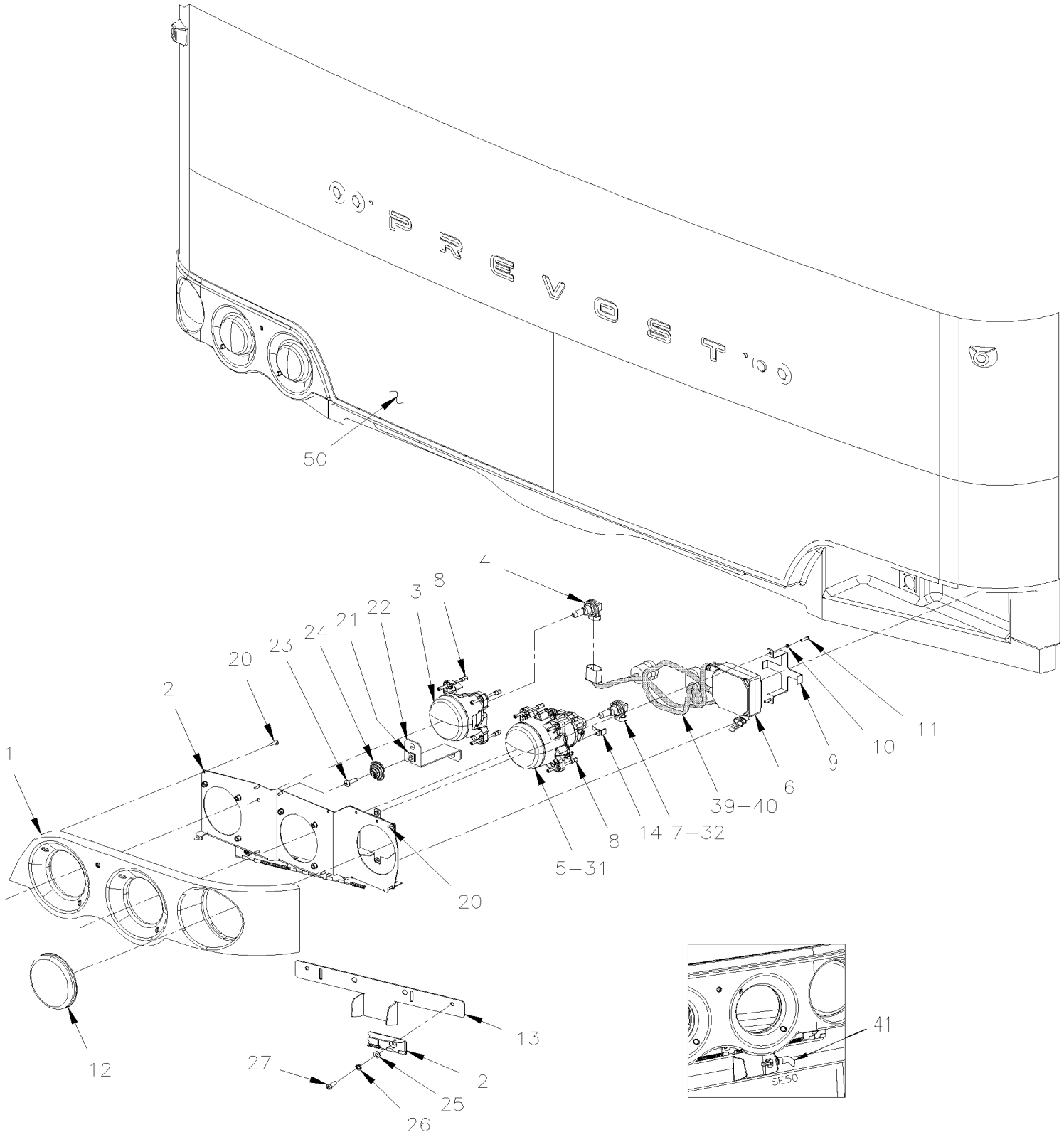

From 5-8359 To 8-9339		Date:07/2024	PAGE:Y2-0660-01

HEADLAMP & FRONT DIRECTIONAL LAMPS ROUND "HALOGENE" & "XENON"

Item#	Part	Description	XLII 45	XLII MTH40	XLII MTH45	XLII MTH45E	NOTES
	430615	LAMP ASSY L.H. "XENON" W/BEZEL XL-II W/O CABLE ASSY	1	1	1	1	
	430619	LAMP ASSY L.H. "HALOGENE" W/BEZEL XL-II W/O CABLE ASSY	1	1	1	1	
	430616	LAMP ASSY R.H. "XENON" W/BEZEL XL-II W/O CABLE ASSY	1	1	1	1	
	430620	LAMP ASSY R.H. "HALOGENE" W/BEZEL XL-II W/O CABLE ASSY	1	1	1	1	
1	476210	. HEADLAMP BEZEL, R.H. / CURBE SIDE	1	1	1	1	
1	476211	. HEADLAMP BEZEL, L.H. / STREET SIDE	1	1	1	1	
2	430575	. SUPPORT R.H.	1	1	1	1	
2	430587	. SUPPORT L.H.	1	1	1	1	
3	930359	. LAMP ASSY / HIGH	1	1	1	1	
4	563092	. . BULB / 65WATT-12VOLTS / SAE# H9	1	1	1	1	
5	930388	. LAMP ASSY "XENON" / W/BALLAST	1	1	1	1	
5	930389	. . LAMP ASSY "XENON" / W/OUT BALLAST & W/OUT BULB To 7-9095	1	1	1	1	
5	930389	. . LAMP ASSY "XENON" / W/OUT BALLAST & W/OUT BULB From 7-9096	1	1	1	1	
6	930390	. . BALLAST "XENON" LOW BEAM 12Volt Power	1	1	1	1	
7	563365	. . BULB / 35WATT / SAE D2S / 85122	1	1	1	1	
8	930373	. . KIT, BOLTS ADJUSTMENT (3 BOLTS)	1	1	1	1	
9	930434	. . SUPPORT "XENON" BALLAST BLACK	1	1	1	1	
10	502698	. SCREW MA PAN PH M4-0.7x16 SS BK	4	4	4	4	
11	502834	. WASHER LO SPT 4.1x7.6x0.9 N500	4	4	4	4	
12	930364	. LED AMBER 4" / DIRECTIONAL / FRONT 12Volt / 60L (PREVOST)	1	1	1	1	
13	430576	. HOLDER LAMP	1	1	1	1	
14	430604	. BULB STOPPER / "SAFETY FAILURE STRESS" / SS	2	2	2	2	
20	5001536	. SCREW PTR BDG PH M4x12 SS	8	8	8	8	
21	5001009	. NUT AN 1/4 NYL	1	1	1	1	
22	430572	. SUPPORT CENTRAL	1	1	1	1	
23	504249	. RIVET CHY Q PRDG 3/16x3/8 SS	AR	AR	AR	AR	
24	930369	. SPRING CONICAL	1	1	1	1	
25	502573	. WASHER FL 6.4x12.5x1.6 SS	4	4	4	4	
26	5001432	. WASHER LO INT .256x.478x.028 SS 410	4	4	4	4	
27	5001507	. SCREW MA PAN PH M6-1.0x20 SS	4	4	4	4	
31	930360	. LAMP ASSY / LOW	1	1	1	1	H A
32	563092	. BULB / 65WATT-12VOLTS / SAE# H9	1	1	1	1	H
39	065929	CABLE ASSY / W/"HALOGENE" LAMPS / W/XL-II To 7-9095	1	1	1	1	H
39	066990	CABLE ASSY / W/"HALOGENE" LAMPS / MUX From 7-9096			1	1	H
40	065930	CABLE ASSY / W/"XENON" LAMPS / W/XL-II To 7-9095	1	1	1	1	
40	066991	CABLE ASSY / W/"XENON" LAMPS / MUX From 7-9096			1	1	
41	563335	SENSOR THERMISTOR ASSY / OUTSIDE / / PED 15416387 From 7-9096		1	1	1	
NS	430602	KIT RETROFIT "XENON" FROM HALOGENE "XL-II"	1	1	1	1	
50	**Y2-1851-00**	**FRONT CAP - INSTALLATION**					

From 5-8359 To 8-9339		Date:07/2024	PAGE:Y2-0660-01

HEADLAMP & FRONT DIRECTIONAL LAMPS ROUND "HALOGENE" & "XENON"

Item#	Part	Description	XLII 45	XLII MTH40	XLII MTH45	XLII MTH45E	NOTES
		A) TO CONVERT HALOGENE TO XENON, ASK KIT #430603					
		H) USE WITH HALOGENE ONLY					

From Y-7046 To 4-8358		Date:07/2024	PAGE:Y2-0661-00
FOG LAMP			

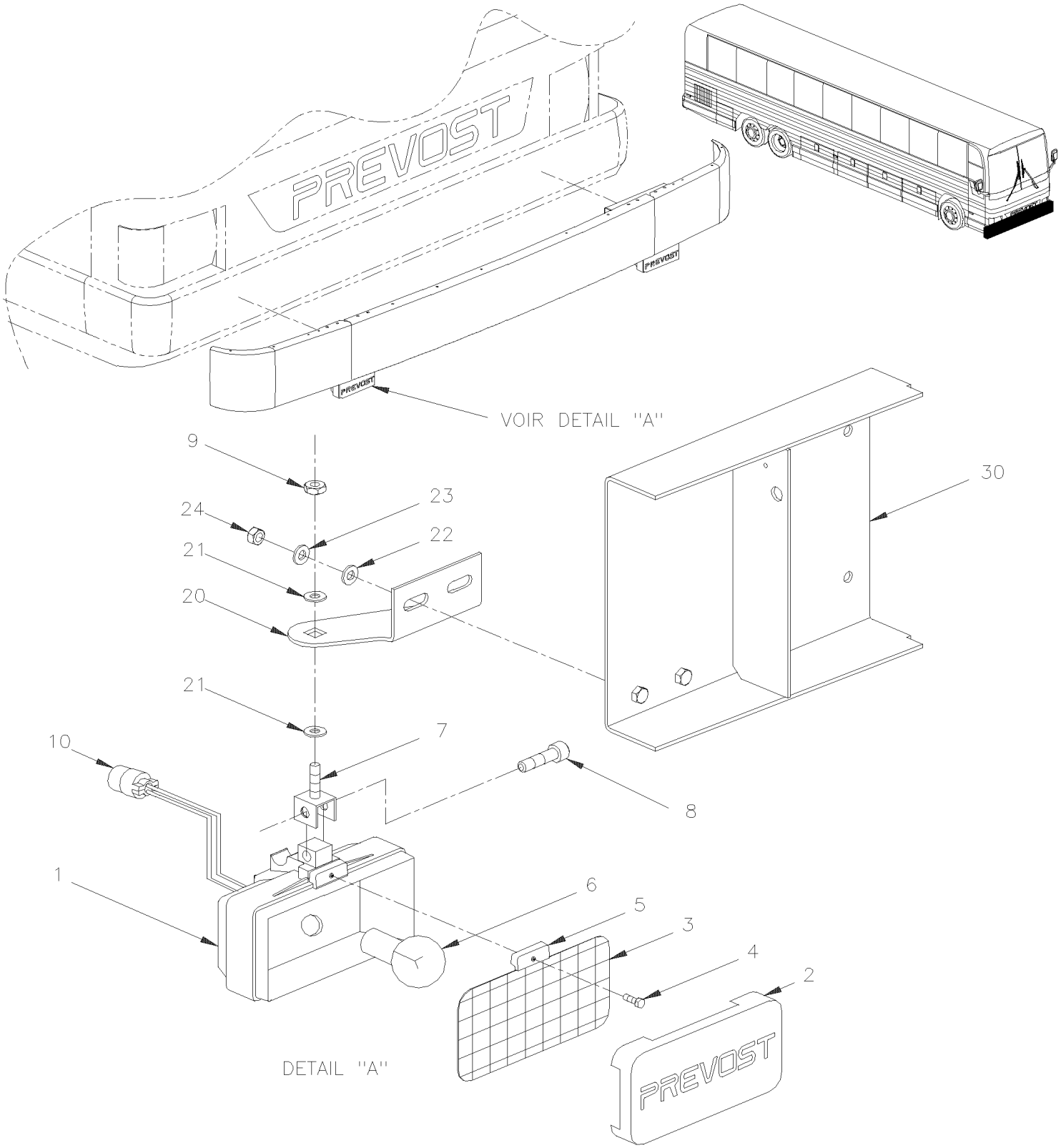

From Y-7046 To 4-8358		Date:07/2024	PAGE:Y2-0661-00

FOG LAMP

Item#	Part	Description	XLII 45	XLII MTH40	XLII MTH45	XLII MTH45E	NOTES
	430499	FOG LAMP 12 V / "BOSCH" TOURING 170 / W/CONECTOR "DEUTSCH"	1	1	1	1	
	430563	DRIVING LAMP ASSY	1	1	1	1	A
1	N.S.S.	. HOUSING	1	1	1	1	1
2	930246	. COVER FOG / "BOSH" TOURING	1	1	1	1	
3	930241	. LAMP UNIT / FOG	1	1	1	1	
3	930381	. LAMP UNIT / DRIVING LAMP	1	1	1	1	A
4	930243	. SCREW	1	1	1	1	
5	930242	. RETAINER	1	1	1	1	
6	561882	. BULB / 55WATT-12VOLTS / SAE# H3 / 64151	1	1	1	1	
7	930244	. BRACKET KIT	1	1	1	1	
8	502527	. . SCREW CAP HEX M8-1.25x50 G8.8 Z050	1	1	1	1	
9	5001006	. NUT HEX JAM M10-1.0 ZP	1	1	1	1	
10	562901	CONNECTOR / HD10 SERIES / SH 3C / DEUTSCH HD16-3-96S	1	1	1	1	
NS	562482	SOCKET TERMINAL / 16-14 / DEUTSCH 0462-209-16141	2	2	2	2	
NS	562387	CONVOLUTED TUBING / SLIT / BLACK / .250"	AR	AR	AR	AR	
NS	561996	SEALING PLUG TYPE 12 & 16 / DEUTSCH 114017	1	1	1	1	
20	410666	SUPPORT L.H. FOG LAMP	1	1	1	1	
20	410722	SUPPORT R.H. FOG LAMP	1	1	1	1	
21	500445	WASHER FL .437x1.000x.083 Z050	2	2	2	2	
22	500441	WASHER FL .312x.734x.065 Z050	2	2	2	2	
23	500476	WASHER LO SPT .317x.586x.078 Z050	2	2	2	2	
24	500778	NUT HEX 5/16-18 N500	2	2	2	2	
30	**Y2-1850-00**	**BUMPER FRONT**					
		A) USE IN "OPTION" DRIVING LAMP					
		1) NOT SOLD SEPARATELY					

From 5-8359 To 8-9339		Date:07/2024	PAGE:Y2-0661-01
FOG LAMP			

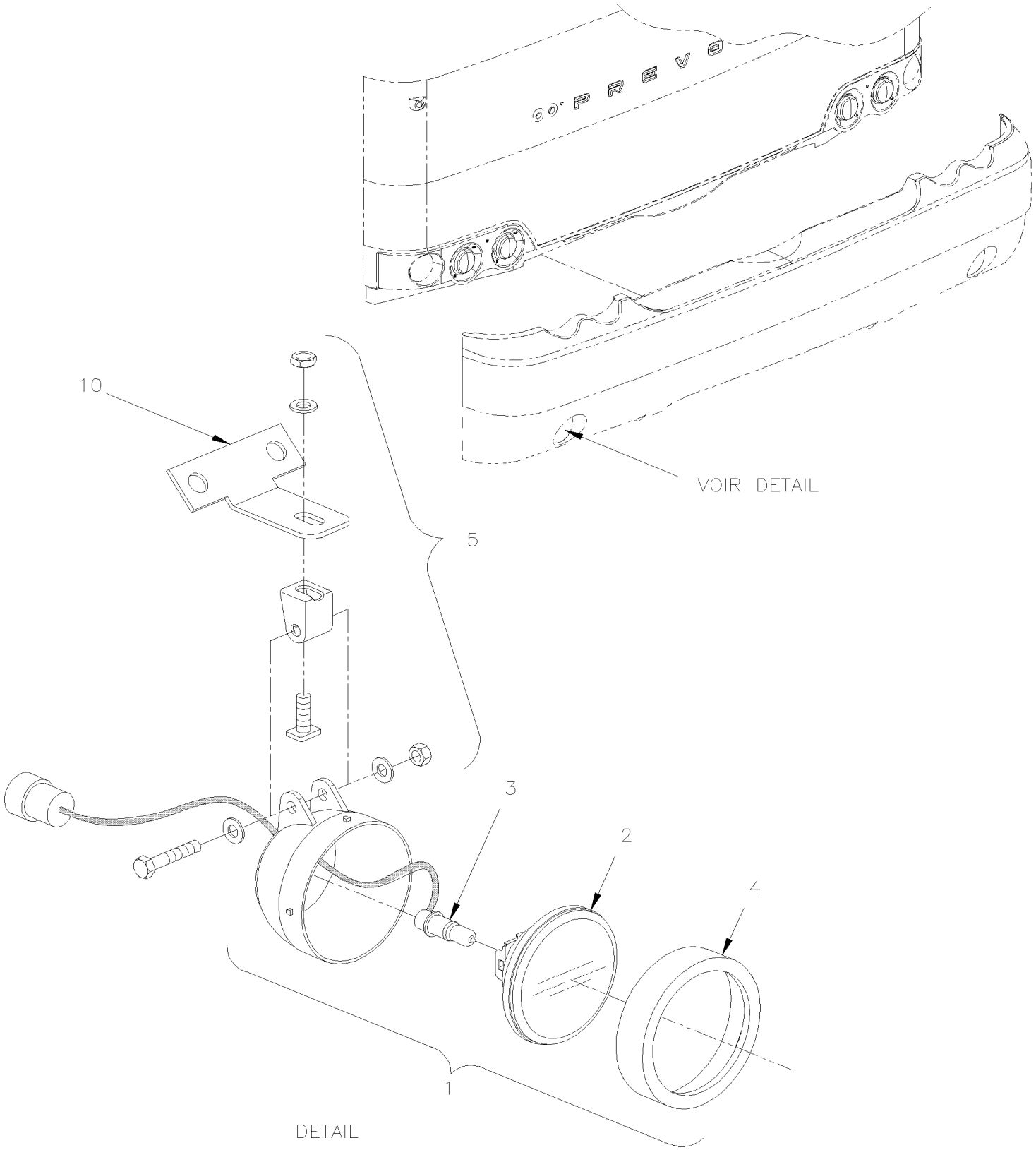

From 5-8359 To 8-9339		Date:07/2024	PAGE:Y2-0661-01

FOG LAMP

Item#	Part	Description	XLII 45	XLII MTH40	XLII MTH45	XLII MTH45E	NOTES
	430553	FOG LAMP 12 V / "BOSCH" COMPACT 100 / W/CONECTOR "DEUTSCH"	2	2	2	2	
1	930361	. FOG LAMP ASSY	1	1	1	1	
2	930370	. GLASS	1	1	1	1	
3	561882	. BULB / 55WATT-12VOLTS / SAE# H3 / 64151	1	1	1	1	
4	930371	. HOLDER RING	1	1	1	1	
5	930372	. KIT HARDWARE	1	1	1	1	
10	**Y2-1850-02**	**BUMPER FRONT**					
NS	**430220**	**FOG LAMP / REPLACEMENT KIT 2 LAMPS / "XL-II" & "X3" & "H3" & "VIP" / BASIC KIT**	1	1	1	1	

From 5-8359 To 8-9339		Date:07/2024	PAGE:430220
FOG LAMP / REPLACEMENT KIT 2 LAMPS / "XL-II" & "X3" & "H3" & "VIP" / BASIC KIT			

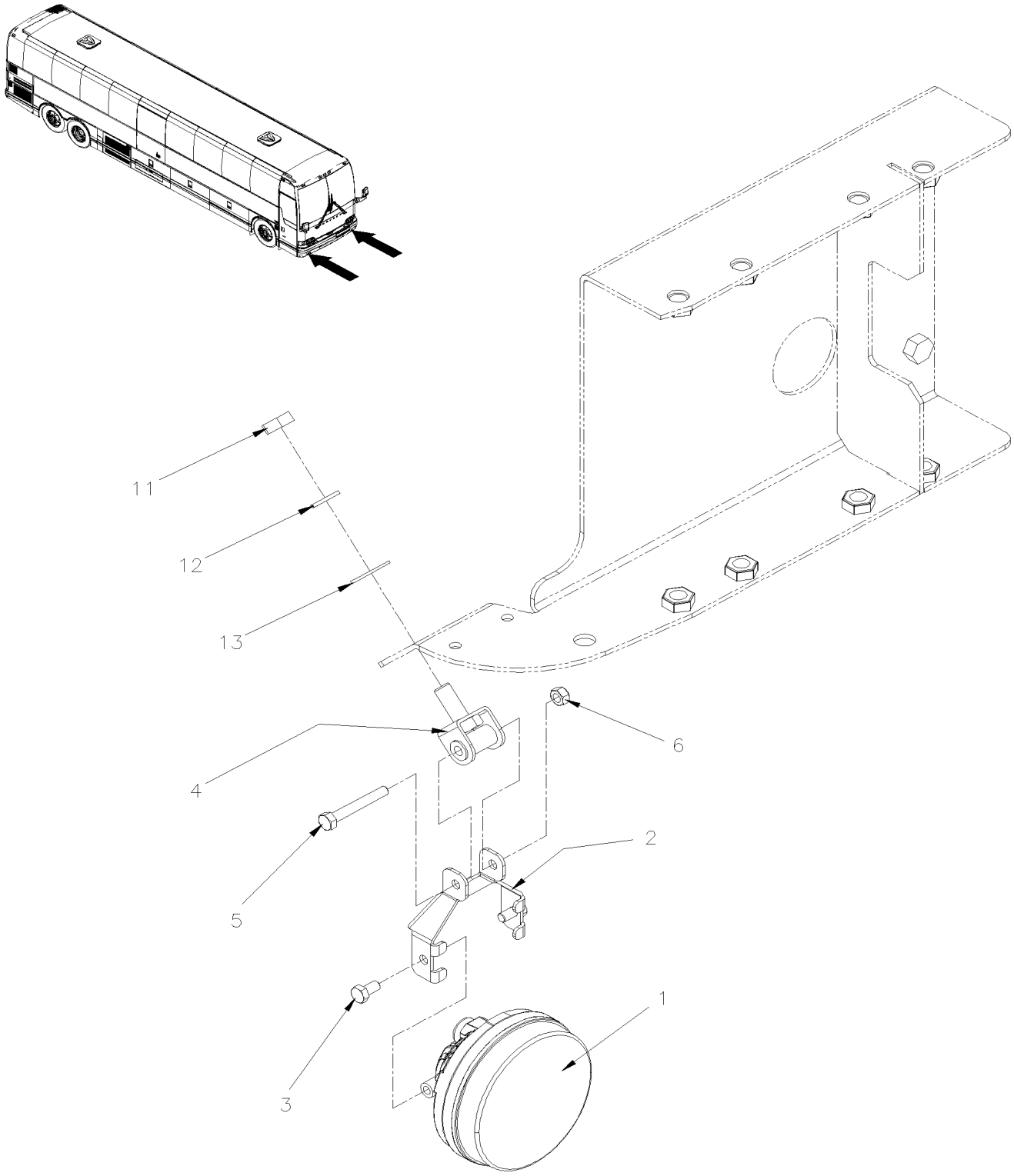

From 5-8359 To 8-9339		Date:07/2024	PAGE:430220

FOG LAMP / REPLACEMENT KIT 2 LAMPS / "XL-II" & "X3" & "H3" & "VIP" / BASIC KIT

Item#	Part	Description	XLII 45	XLII MTH40	XLII MTH45	XLII MTH45E	NOTES
1	560636	FOG LAMP LED	2	2	2	2	
2	430200	SUPPORT, FOG LIGHT	2	2	2	2	
3	5001982	SCREW CAP HEX M6-1.0x12 SS BK	4	4	4	4	
4	430208	SUPPORT, FOG LIGHT	2	2	2	2	
5	5001923	SCREW CAP HEX M6-1.0x45 SS BK	2	2	2	2	
6	5001182	NUT HEX NYRT M6-1.0 SS	2	2	2	2	
11	502567	NUT HEX M10-1.5 SS	2	2	2	2	
12	502616	WASHER LO SPT 10.2x18.1x2.2 SS	2	2	2	2	
13	500270	WASHER FL .406x1.000x.063 SS	2	2	2	2	
NS	IS-17151	SEE INSTRUCTION SHEET	1	1	1	1	
NS	FI-17151	VOIR FEUILLE D'INSTRUCTION	1	1	1	1	

From Y-7046 To 8-9339		Date:07/2024	PAGE:Y2-0662-00
CLEARANCE & MARKER LIGHT			

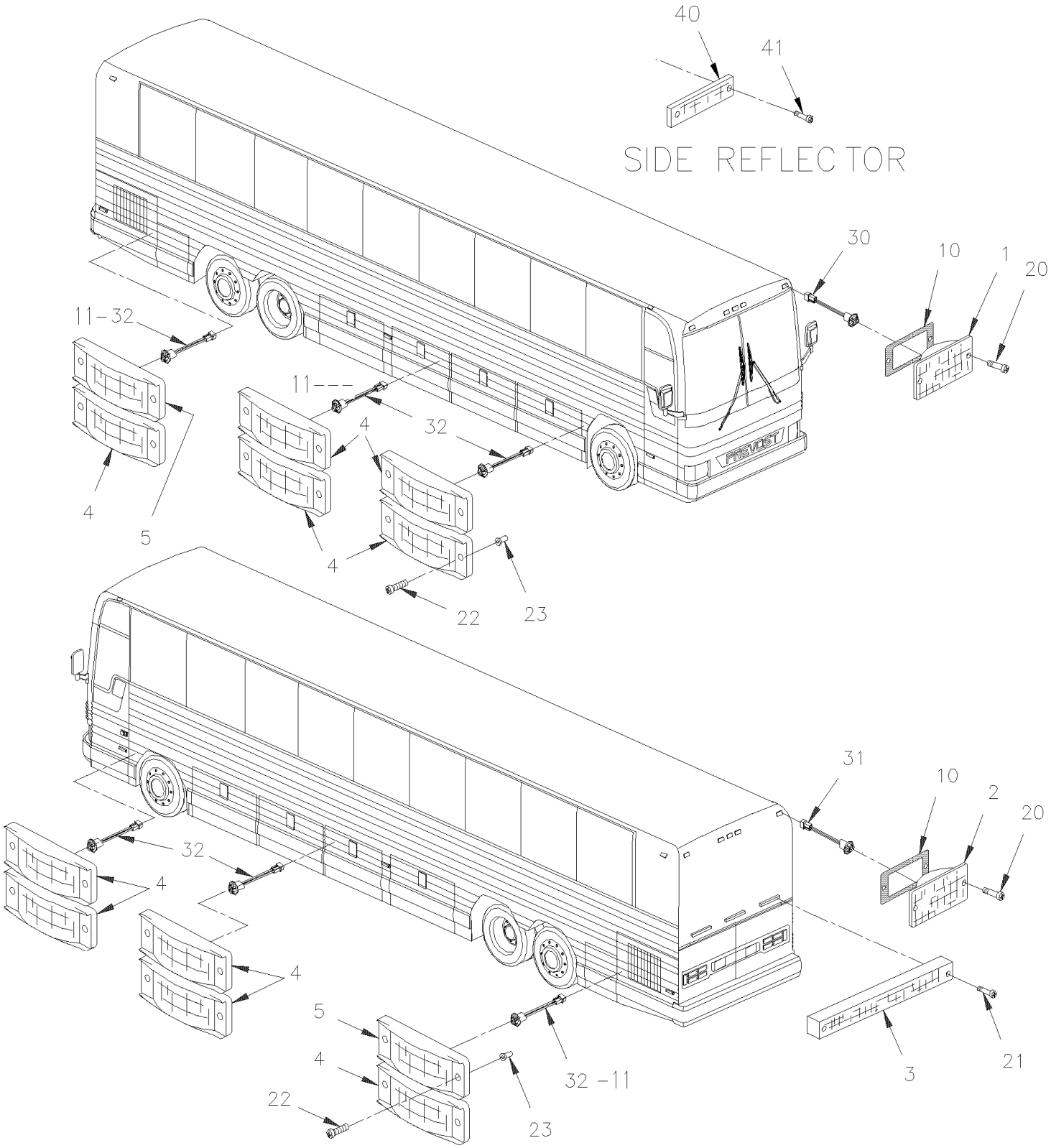

From Y-7046 To 8-9339		Date:07/2024	PAGE:Y2-0662-00

CLEARANCE & MARKER LIGHT

Item#	Part	Description	XLII 45	XLII MTH40	XLII MTH45	XLII MTH45E	NOTES
1	930337	LAMP ID & CLEAR -LED AMBER / 6 LEDS To 5-8407	7	7	7	7	
1	930416	LAMP ID & CLEAR -LED AMBER / 3 LEDS To 5-8407	7	7	7	7	
1	066123	LAMP ID & CLEAR -6 LED AMBER / "JIFFI SPLICE" From 5-8408	7	7	7	7	
. NS	930337	. LAMP ID & CLEAR -LED AMBER / 6 LEDS From 5-8408	1	1	1	1	
. NS	430630	. SEAL LAMP BLACK 1/8" THICK From 5-8408	1	1	1	1	
. NS	562286	. PIN TERMINAL / 18-16 / DEUTSCH 0460-202-16141 From 5-8408	1	1	1	1	
. NS	561608	. SOCKET TERMINAL / 18-16 / DEUTSCH 0462-201-16141 From 5-8408	1	1	1	1	
1	066527	LAMP ID & CLEAR -3 LED AMBER / "JIFFI SPLICE" From 5-8408	7	7	7	7	M
. NS	930416	. LAMP ID & CLEAR -LED AMBER / 3 LEDS From 5-8408	1	1	1	1	M
. NS	430630	. SEAL LAMP BLACK 1/8" THICK From 5-8408	1	1	1	1	M
. NS	562286	. PIN TERMINAL / 18-16 / DEUTSCH 0460-202-16141 From 5-8408	1	1	1	1	M
. NS	561608	. SOCKET TERMINAL / 18-16 / DEUTSCH 0462-201-16141 From 5-8408	1	1	1	1	M
NS	563545	SPLICE / JIFFI SPLICE / 16G / DEUTSCH JS16-00 From 5-8408	AR	AR	AR	AR	
2	930334	LAMP ID & CLEAR -LED RED / 6 LEDS To 5-8407	7	7	7	7	
2	930415	LAMP ID & CLEAR -LED RED / 3 LEDS To 5-8407	7	7	7	7	
2	066122	LAMP ID & CLEAR -6 LED RED / "JIFFI SPLICE" From 5-8408	7	7	7	7	
. NS	930334	. LAMP ID & CLEAR -LED RED / 6 LEDS From 5-8408	1	1	1	1	
. NS	430630	. SEAL LAMP BLACK 1/8" THICK From 5-8408	1	1	1	1	
. NS	562286	. PIN TERMINAL / 18-16 / DEUTSCH 0460-202-16141 From 5-8408	1	1	1	1	
. NS	561608	. SOCKET TERMINAL / 18-16 / DEUTSCH 0462-201-16141 From 5-8408	1	1	1	1	
2	066526	LAMP ID & CLEAR -3 LED RED / "JIFFI SPLICE" From 5-8408	7	7	7	7	N
. NS	930415	. LAMP ID & CLEAR -LED RED / 3 LEDS From 5-8408	1	1	1	1	N
. NS	430630	. SEAL LAMP BLACK 1/8" THICK From 5-8408	1	1	1	1	N
. NS	562286	. PIN TERMINAL / 18-16 / DEUTSCH 0460-202-16141 From 5-8408	1	1	1	1	N
. NS	561608	. SOCKET TERMINAL / 18-16 / DEUTSCH 0462-201-16141 From 5-8408	1	1	1	1	N
NS	563545	SPLICE / JIFFI SPLICE / 16G / DEUTSCH JS16-00 From 5-8408	AR	AR	AR	AR	
3	930330	CYCLOP LAMP	3	3	3	3	
. NS	930353	. CAP PLUG SCREW	2	2	2	2	
NS	506191	TAPE RUB ADH1 CC POL 1/8" x 1/4" x 50' / GREY 2520X	AR	AR	AR	AR	
4	930341	SIDE MARKER ASSY / AMBER / W/2 LED To 5-8700	10	10	10	10	
4	930376	SIDE MARKER ASSY / AMBER / W/6 LED To 5-8700	10				A
4	930401	SIDE MARKER ASSY / AMBER / W/6 LED W/REFLECTOR From 5-8701	10	10	10	10	
4	930443	SIDE MARKER ASSY / AMBER / W/2 LED W/REFLECTOR From 5-8701	10	10	10	10	S
NS	477482	GROMMET 2 HOLESx1.6x23.5MMx2.0MMx8.0MMx25MM From 5-8701	10	10	10	10	
NS	562155	CONNECTOR ASSY SEALED 2C / GROTE 6618-G8 From 5-8701	10	10	10	10	
5	930340	SIDE MARKER ASSY / RED / W/2 LED To 5-8700	2	2	2	2	
5	930380	SIDE MARKER ASSY / RED / W/6 LED To 5-8700	2				A
5	930400	SIDE MARKER ASSY / RED / W/6 LED W/REFLECTOR From 5-8701	2	2	2	2	
5	930444	SIDE MARKER ASSY / RED / W/2 LED W/REFLECTOR From 5-8701	2	2	2	2	S
NS	477482	GROMMET 2 HOLESx1.6x23.5MMx2.0MMx8.0MMx25MM From 5-8701	2	2	2	2	
NS	562155	CONNECTOR ASSY SEALED 2C / GROTE 6618-G8 From 5-8701	2	2	2	2	
10	930344	SEAL LAMP BLACK 1/8" THICK To 6-9021	14	14	14	14	

From Y-7046 To 8-9339		Date:07/2024	PAGE:Y2-0662-00

CLEARANCE & MARKER LIGHT

Item#	Part	Description	XLII 45	XLII MTH40	XLII MTH45	XLII MTH45E	NOTES
10	430630	SEAL LAMP BLACK 1/8" THICK From 6-9022		14	14	14	
11	064990	CABLE ASSY / SIDE MARKER LAMP FOR DOORS	1	1	1	1	
. NS	473832	. GROMMET 2 HOLESx1.6x11.0MMx2.0MMx8.0MMx16MM	1	1	1	1	
11	067207	CABLE ASSY / SIDE MARKER LAMP FOR DOORS	1	1	1	1	
. NS	473832	. GROMMET 2 HOLESx1.6x11.0MMx2.0MMx8.0MMx16MM	1	1	1	1	
20	5001364	SCREW PTR TR PH M4x20 ZP	2	2	2	2	
21	502665	SCREW TP OV PH #6x3/4 SS EMN	2	2	2	2	
22	5001042	SCREW MA RND PH #10-32x1 1/4 SS	2	2	2	2	
23	502774	NUT WELL #10-32x.625	2	2	2	2	
30	064816	CABLE HARNESS / FRONT ROOF To 3-8130	1	1	1	1	
30	065761	CABLE HARNESS / FRONT ROOF From 3-8131 To 5-8407	1	1	1	1	
30	066116	CABLE HARNESS / FRONT ROOF From 5-8408	1	1	1	1	
31	064822	CABLE HARNESS / REAR ROOF To 5-8407	1	1	1	1	
31	066117	CABLE HARNESS / REAR ROOF From 5-8408	1	1	1	1	
32	064990	CABLE ASSY / SIDE MARKER LAMP FOR DOORS To 4-8358	AR	AR	AR	AR	
. NS	473832	. GROMMET 2 HOLESx1.6x11.0MMx2.0MMx8.0MMx16MM To 4-8358	1	1	1	1	
40	930212	REFLECTOR AMBER 1 1/8" x 4 3/8"	AR	AR	AR	AR	
41	500124	SCREW TP TR PH #8x1/2 SS	AR	AR	AR	AR	
		A) OPTION "ORLEANS"					
		M) 066527 CAN'T BE SOLD / BUY COMPONENTS SEPARATELY					
		N) 066526 CAN'T BE SOLD / BUY COMPONENTS SEPARATELY					
		S) SERVICE					

From Y-7046 To 8-9339		Date:07/2024	PAGE:Y2-0663-00
DOCK & CORNERING LIGHT			

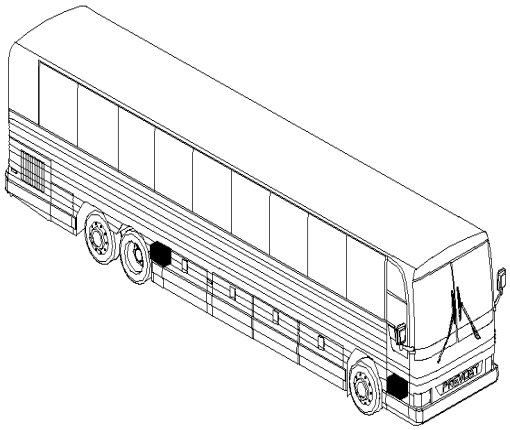

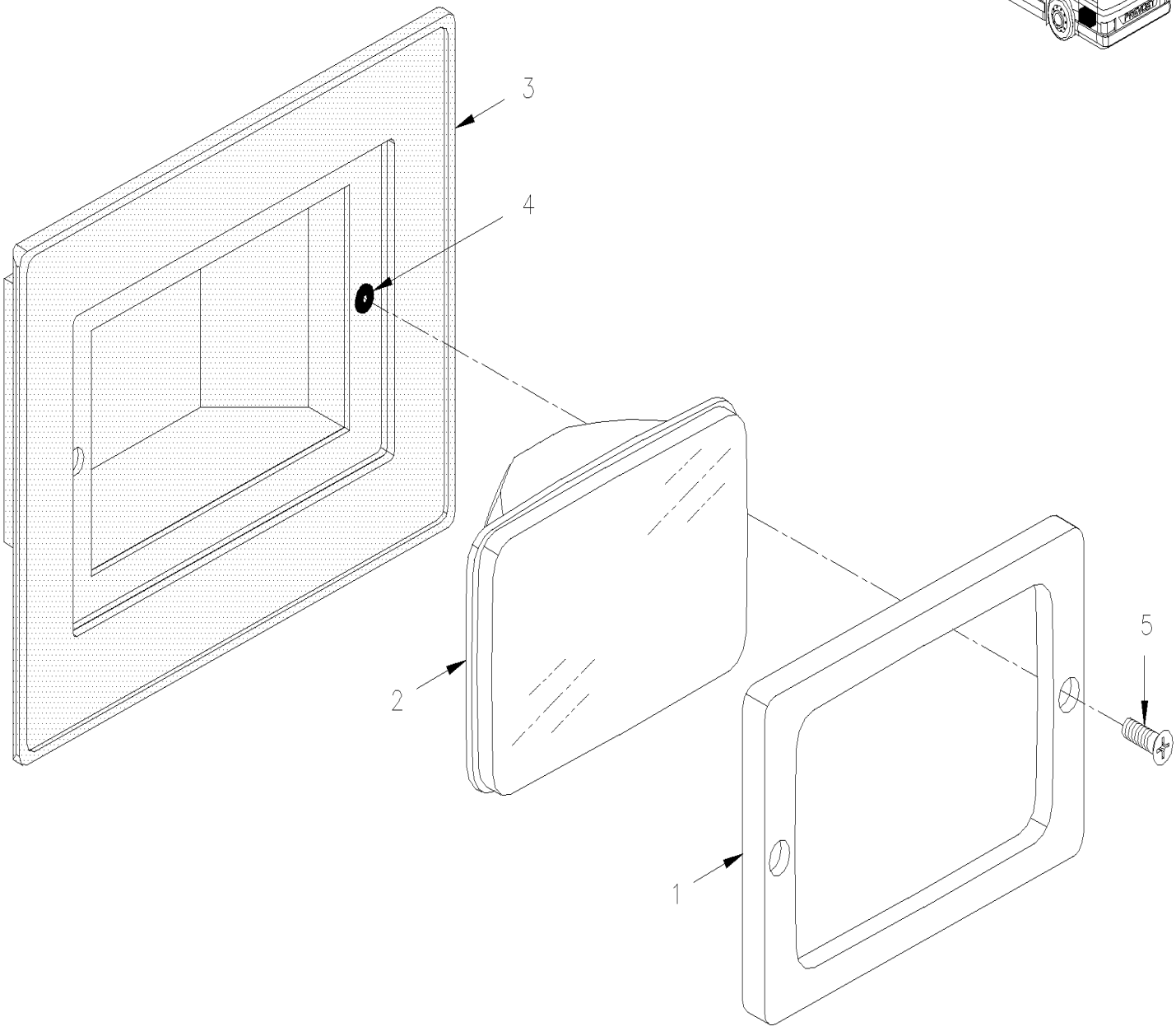

From Y-7046 To 8-9339		Date:07/2024	PAGE:Y2-0663-00

DOCK & CORNERING LIGHT

Item#	Part	Description	XLII 45	XLII MTH40	XLII MTH45	XLII MTH45E	NOTES
1	286400	BEZEL	4	4	4	4	
1	473424	BEZEL	AR				A
NS	287147	SPACER ¼" / BLACK PLASTIC	AR				A
2	930319	SEAL BEAM / 37.5WATT-12V / SAE# H9415	4	4	4	4	
3	490879	BOX / FIXED ON REAR FENDER	1	1	1	1	
4	500589	. NUT WELL M4-0.7x13.5	2	2	2	2	
4	5001055	NUT WELL M4-0.7x14.5	1	1	1	1	
5	502530	SCREW MA OV PH M4-0.7x40 SS	AR	AR	AR	AR	
NS	065358	CABLE ASSY	1				A
NS	561707	RELAY 24V S.P.D.T. W/RESISTOR /	2				A
		A) THOSE ITEMS ARE USE WITH COACH CORNERING LIGHT SEE DIAGRAM D060953 FOR MORE INFORMATION					

From Y-7046 To 3-8164		Date:07/2024	PAGE:Y2-0664-00
REAR EXTERIOR LIGHTS & PLATE HOLDER			

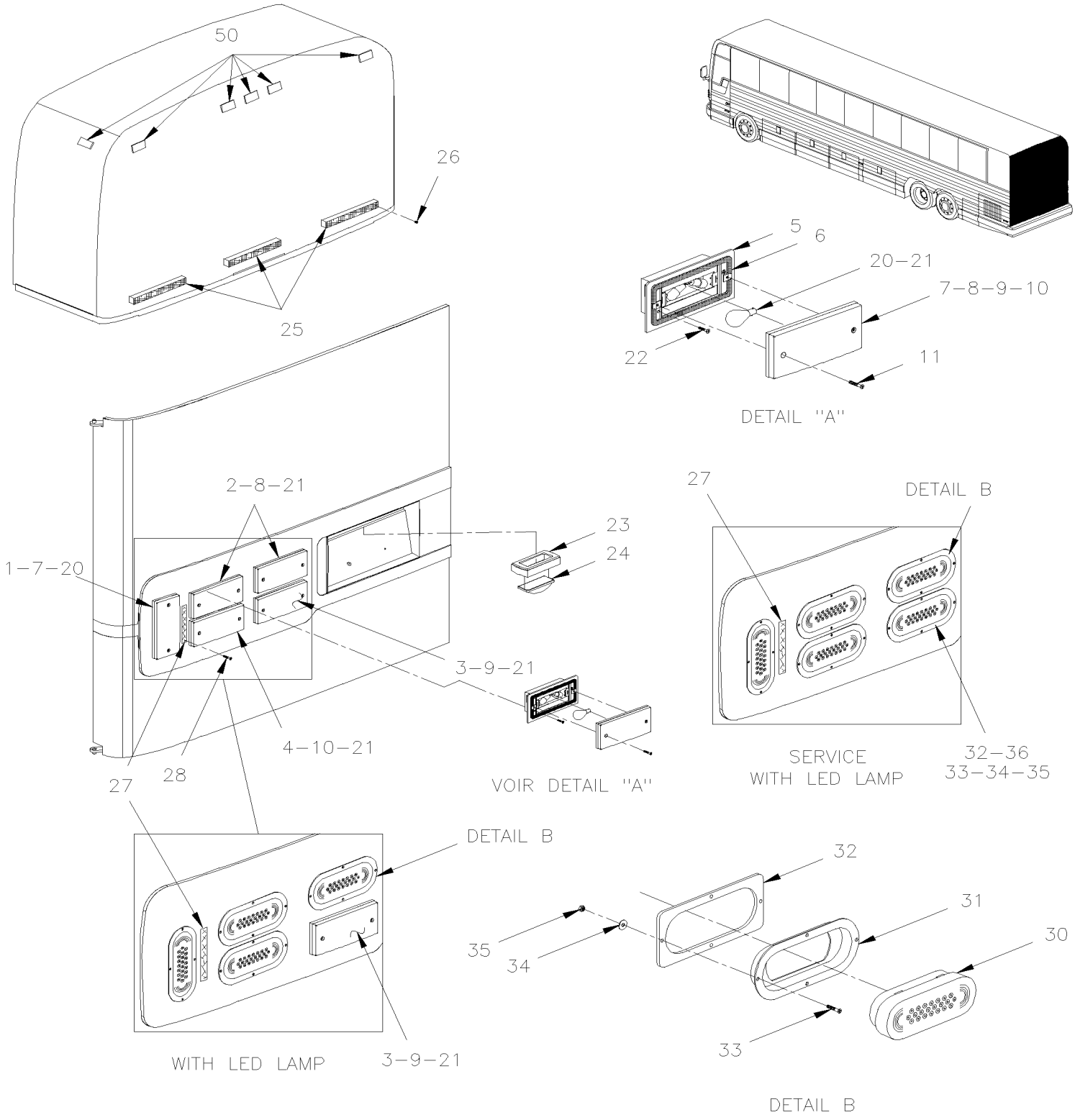

From Y-7046 To 3-8164		Date:07/2024	PAGE:Y2-0664-00

REAR EXTERIOR LIGHTS & PLATE HOLDER

Item#	Part	Description	XLII 45	XLII MTH40	XLII MTH45	XLII MTH45E	NOTES
1	930310	. LAMP ASSY TAIL	1	1	1	1	
2	930308	. LAMP ASSY / STOP	2	2	2	2	
3	930311	. LAMP ASSY BACK UP	1	1	1	1	
4	930309	. LAMP ASSY TURN SIGNAL	1	1	1	1	
5	N.S.S.	. . HOUSING	1	1	1	1	1
6	930300	. . GASKET	1	1	1	1	
7	930314	. . LENS / RED (TAIL)	AR	AR	AR	AR	
8	930312	. . LENS / RED (STOP)	AR	AR	AR	AR	
9	930315	. . LENS / CLEAR	AR	AR	AR	AR	
10	930313	. . LENS / AMBER	AR	AR	AR	AR	
11	N.P.N.	. . SCREW	2	2	2	2	4
20	560123	. BULB / 4WATT-12VOLTS / SAE# 67	4	4	4	4	
21	560589	. BULB / 32WATT-12VOLTS / SAE# 1156	10	10	10	10	
NS	948702	TIE CABLE BK 85 X 2.5	1	1	1	1	
NS	064809	CABLE / ENGINE DOOR REAR LAMP W/BULB	1	1	1	1	
22	502698	SCREW MA PAN PH M4-0.7x16 SS BK	2	2	2	2	
23	930208	GROMMET RUBBER RETAINER / LICENCE LAMP TL 15700	1	1	1	1	
24	930266	SEAL BULB / 2WATT - 12VOLTS / TL-15206	2	2	2	2	
24	930358	SEAL LEDS / LEDS - 12VOLTS	2				
25	930330	CYCLOP LAMP	3	3	3	3	
. NS	930353	. CAP PLUG SCREW	2	2	2	2	
26	502665	SCREW TP OV PH #6x3/4 SS EMN	2	2	2	2	
NS	506191	TAPE RUB ADH1 CC POL 1/8" x 1/4" x 50' / GREY 2520X	AR	AR	AR	AR	
27	930320	REFLECTOR RED 1 3/16" x 4 7/16"	1	1	1	1	
28	5001087	SCREW TP BDG PH #10x1/2 SS	2	2	2	2	
30	930377	LAMP ASSY RED "LED" / TAIL / STOP / DIRECT	2				L
30	191712	LAMP ASSY AMBER "LED" / DIRECT	2				L
31	430565	MOUNTING BRACKET	4				L
32	287376	ADAPTOR MOUNTING PLATE	4				L
33	5001027	SCREW MA PAN PH #10-32x1 SS EMN	16				L
34	5001137	WASHER FL .203x.438x.050 SS	16				L
35	500423	NUT HEX NYRT #10-32 SS	16				L
NS	065655	CABLE / ENGINE DOOR REAR LAMP W/LEDS	2				L
36	930002	LAMP ASSY BACK UP "LED" WITH GROMMET	2				L
50	**Y2-0662-00**	**CLEARANCE & MARKER LIGHT**					
		L) VEHICLE EQUIPED WITH "LED" LAMP ON DOOR					
		1) NOT SOLD SEPARATELY					
		4) NO PARTS NUMBER					

From 4-8165 To 8-9339		Date:07/2024	PAGE:Y2-0664-01
REAR EXTERIOR LIGHTS & PLATE HOLDER			

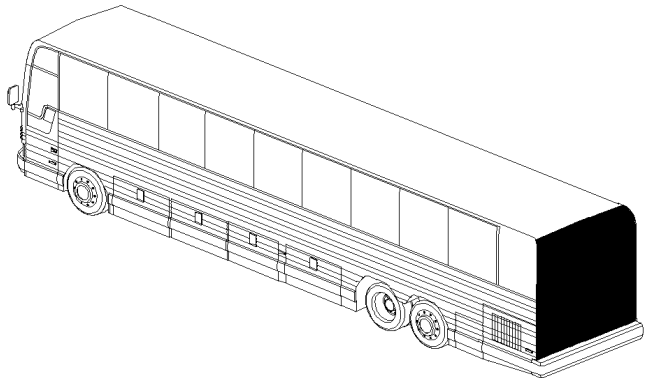

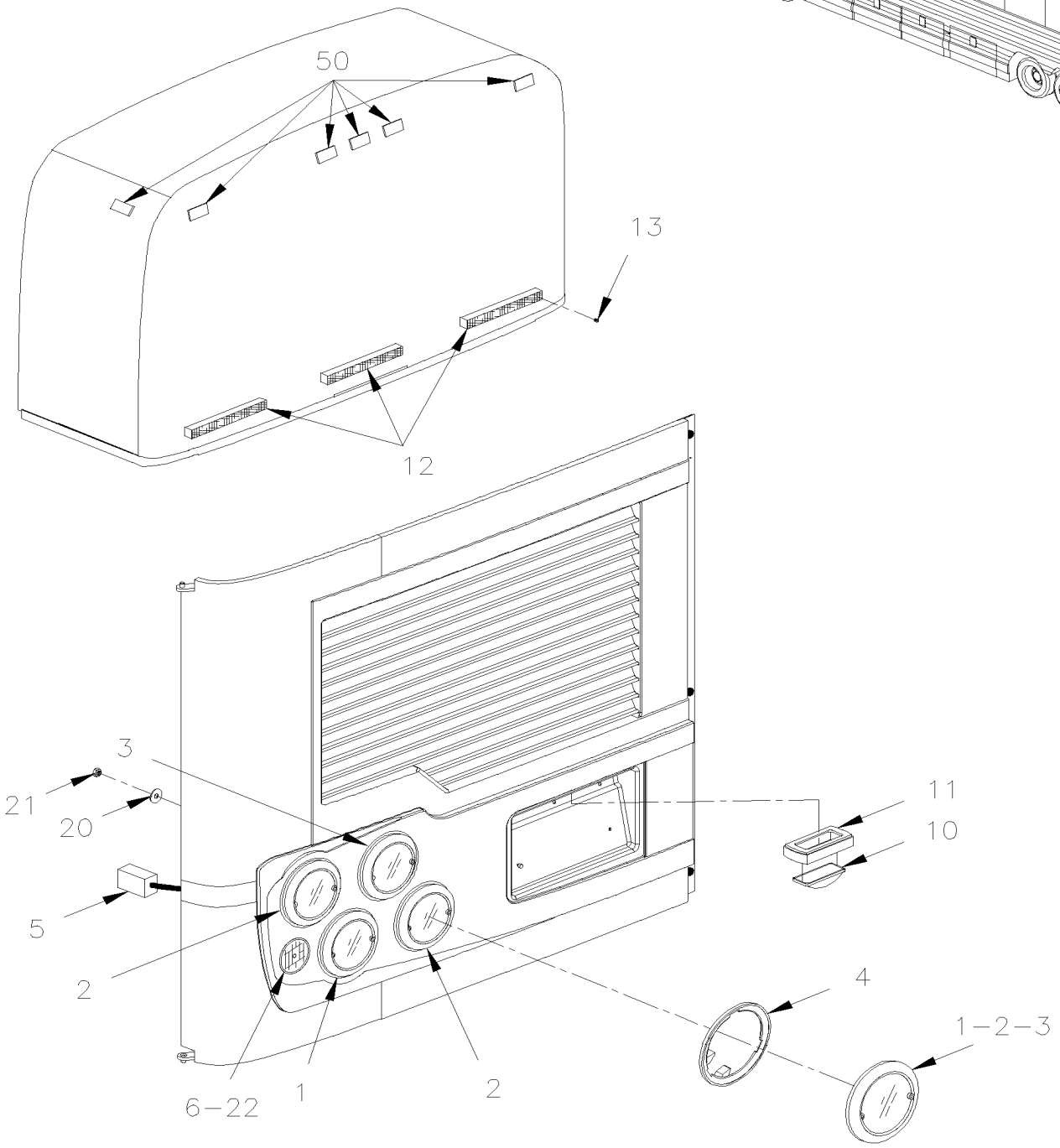

From 4-8165 To 8-9339		Date:07/2024	PAGE:Y2-0664-01

REAR EXTERIOR LIGHTS & PLATE HOLDER

Item#	Part	Description	XLII 45	XLII MTH40	XLII MTH45	XLII MTH45E	NOTES
1	930365	LED AMBER 4" / DIRECTIONAL / REAR 12Volt / 42L (PREVOST)	1	1	1	1	
2	930366	LED STOP & TAIL 4" 12Volt / 6L (PREVOST)	2	2	2	2	
3	930367	LAMP BACK-UP 4" 12Volt / Sealed	1	1	1	1	A
4	430554	SUPPORT LAMP	4	4	4	4	
5	065712	CABLE / ENGINE DOOR REAR LAMP W/LEDS To 7-9095	1	1	1	1	
5	066491	CABLE / ENGINE DOOR REAR LAMP W/LEDS From 7-9096	1	1	1	1	
5	066003	CABLE ADAPTOR / N.J. D.O.T / TAIL & STOP / SEPARATED TAIL & STOP	2	2	2	2	N
6	930384	REFLECTOR RED 3" O.D. / W/SCREW HOLE CENTER To 5-8473	1	1	1	1	
6	930391	REFLECTOR RED 3 3/16" O.D. / W/ADH From 5-8474	1	1	1	1	
10	930368	SEAL LEDS / W/CONNECTOR LEDS - 12VOLTS	1	1	1	1	
. NS	12015378	. CONNECTOR / WEATHER PACK / SH 2C / GRAY / PED 12015378	1	1	1	1	
. NS	N.P.N.	. SEAL LEDS / W/CONNECTOR					4
. NS	562348	. CONNECTOR / WEATHER PACK / PH 2C / GRAY / PED 12034074	1	1	1	1	
. NS	561786	. CABLE SEAL / GRAY / PED 15324980	2	2	2	2	
. NS	561568	. PIN TERMINAL / 16-14 / PED 12089305	2	2	2	2	
11	930208	GROMMET RUBBER RETAINER / LICENCE LAMP TL 15700	1	1	1	1	
11	930408	GROMMET RUBBER RETAINER / LICENCE LAMP TL 150702 SERVICE	1	1	1	1	
12	930330	CYCLOP LAMP	3	3	3	3	
. NS	930353	. CAP PLUG SCREW	2	2	2	2	
13	502665	SCREW TP OV PH #6x3/4 SS EMN	6	6	6	6	
20	5001547	SCREW PTR TR PH M4x20 G500	8	8	8	8	
21	504357	WASHER FL .187x.437x.050 SS	8	8	8	8	
22	500414	SCREW TP BDG PH #10x3/4 SS To 5-8473	1	1	1	1	
NS	192215	LED BACK-UP 4" / W/CABLE ADAPTOR & GROMMET 12Volt / 27L	1	1	1	1	
. A	194114	. LED BACK-UP 4" 12Volt / 27L	1	1	1	1	
. B	G1076517	. GROMMET 4" I.D, BLACK TL 40700	1	1	1	1	
. C	N.P.N.	. LED BACK-UP 4" / W/CABLE ADAPTOR & GROMMET	1	1	1	1	4
NS	G1093246	ADAPTOR HARNESS ASSY / 2 WIRES / TRUCK-LITE 94789	1	1	1	1	
. NS	562601	. CONNECTOR / SUPERSEAL 1.5 SERIES / SH 3C / AMP 282087-1	1	1	1	1	
NS	430040	KIT, HEAT SHIELD PROTECTOR 4" O.D. LAMP	AR	AR	AR	AR	
. A	430041	. INSULATING PAD	1	1	1	1	
. B	430042	. PROTECTOR PLATE	1	1	1	1	
50	**Y2-0662-00**	**CLEARANCE & MARKER LIGHT**					
		A) FOR REPLACE BULB LAMP TO "LEDS" ASK FOR 1 x 192215 + 1 x G1093246					
		N) USE WITH "NEW JERSEY" DOT REGULATION					
		4) NO PARTS NUMBER					

From Y-7046 To 8-9339		Date:07/2024	PAGE:Y2-0665-00
ENGINE COMPARTMENT - ELECTRIC COMPONENTS			

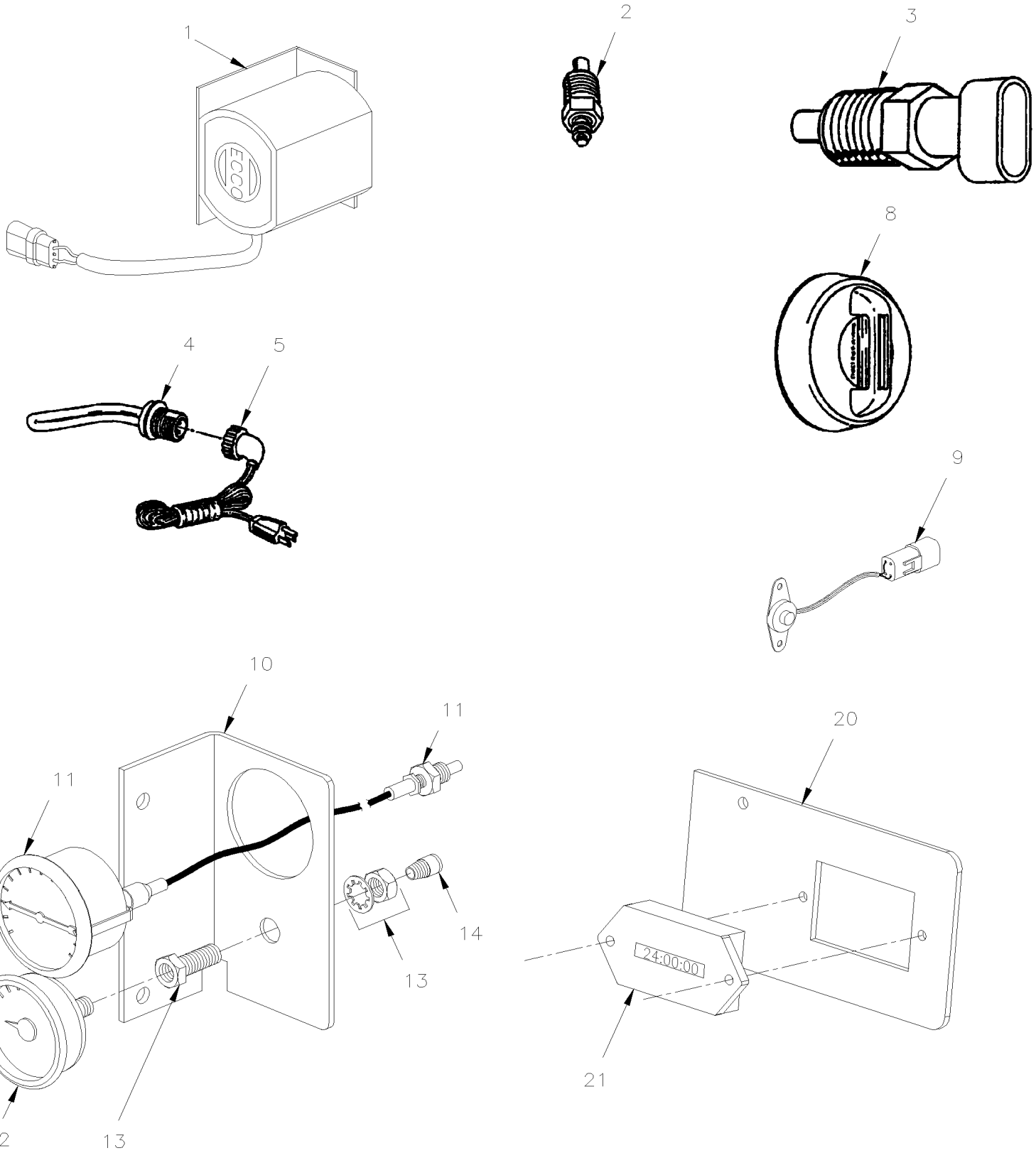

From Y-7046 To 8-9339		Date:07/2024	PAGE:Y2-0665-00

ENGINE COMPARTMENT - ELECTRIC COMPONENTS

Item#	Part	Description	XLII 45	XLII MTH40	XLII MTH45	XLII MTH45E	NOTES
1	563027	BACK-UP ALARM "ECCO" / 12-24vdc / 82-107db	1	1	1	1	
1	563199	BACK-UP ALARM "ECCO" / 12-36vdc / 107db From 2-7809	1	1	1	1	
2	562829	SENSOR / OIL TEMPERATURE / (DASHBOARD)	1				A
3	562395	SENSOR PROBE "LOW LEVEL COOLANT" / 1/4" NPT	1	1	1	1	
4	560410	BLOCK HEATER	1	1	1	1	
5	**Y2-0666-00**	**BLOCK HEATER RECEPTACLE**					
6	381216	BACK-UP ALARM ASSY / "DAP " To 2-7808	1	1	1	1	
6	561488	. ALARM / "DAP" To 2-7808	1	1	1	1	
6	561566	. CONNECTOR / WEATHER PACK / PH 2C / BLACK / PED 12010973 To 2-7808	1	1	1	1	
6	561568	. PIN TERMINAL / 16-14 / PED 12089305 To 2-7808	2	2	2	2	
6	561565	. CABLE SEAL / GREEN / PED 15324982 To 2-7808	2	2	2	2	
6	500163	. SCREW CAP HEX 1/4-20x3/4 G5 Z050 To 2-7808	2	2	2	2	
6	560381	. PLASTIC TUBING / 3/16" / CLEAR To 2-7808	AR	AR	AR	AR	
6	065722	KIT, BACK-UP ALARM / SERIE "XL"	1	1	1	1	
. NS	IS-01155	. SEE INSTRUCTION SHEET	1	1	1	1	
8	562402	DETECTOR / FIRE To Y-7229	2	2	2	2	
NS	065323	KIT, FIRE DETECTOR REPLACEMENT To Y-7229	AR	AR	AR	AR	
. NS	IS-99091	. SEE INSTRUCTION SHEET To Y-7229	1	1	1	1	
9	065290	HEAT DETECTOR "THERMO-DISK" From Y-7230	2	2	2	2	
10	011952	SUPPORT	AR	AR	AR	AR	
11	562331	GAUGE WATER TEMPERATURE / MECHANICAL (CURRENT)	AR	AR	AR	AR	
12	510481	GAUGE, OIL PRESSURE / MECHANICAL (CURRENT)	AR	AR	AR	AR	
13	501711	BULKHEAD COUPLING / PIPE FITTING / 1/4NPT-Fx1/4NPT-Fx1 1/2 BR	AR	AR	AR	AR	
14	501037	MALE ELBOW 90º / SAE 45º FITTING / #4FL-Mx1/4NPT-M BR	AR	AR	AR	AR	
NS	011617	HOSE ASSY TEFLON #4 2615MM	AR	AR	AR	AR	
20	011538	HOURMETER SUPPORT / TOP MOUNT / 93MM X 60MM	1	1	1	1	
20	017328	HOURMETER SUPPORT / SIDE MOUNT / 100MM X 54MM	1	1	1	1	
21	560366	HOURMETER 4-40VOLT DC	1	1	1	1	
		A) WITH "EATON" TRANSMISSION					

From Y-7046 To 8-9339		Date:07/2024	PAGE:Y2-0665-10
SWITCHES, LIGHTS, AJAR - UNDER FLOOR			

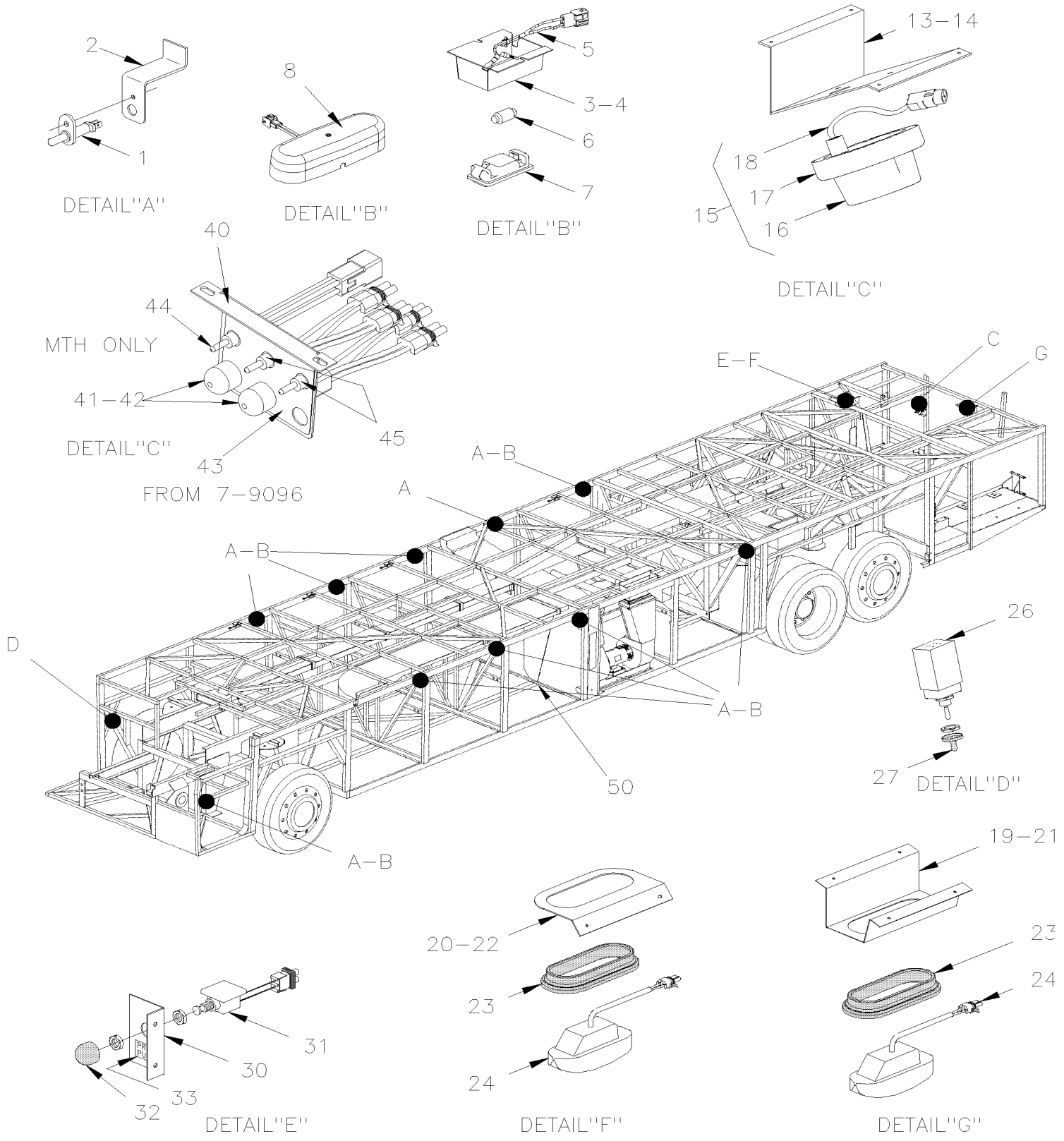

From Y-7046 To 8-9339		Date:07/2024	PAGE:Y2-0665-10

SWITCHES, LIGHTS, AJAR - UNDER FLOOR

Item#	Part	Description	XLII 45	XLII MTH40	XLII MTH45	XLII MTH45E	NOTES
1	562303	SWITCH / S.P.S.T. / N.C. To 5-8788	AR	AR	AR	AR	
1	563464	SWITCH / S.P.S.T. / N.C. / W/RUBBER BOOT From 5-8789	AR	AR	AR	AR	
2	063434	SWITCH SUPPORT / W/BAGGAGE DOORS STD To 5-8788	AR	AR	AR	AR	
NS	065192	SWITCH SUPPORT / BATTERIES COMPARTMENT DOOR To 5-8788	1				
NS	066586	SWITCH SUPPORT / BATTERIES COMPARTMENT DOOR From 5-8789	1				
NS	065728	SWITCH SUPPORT / W/BAGGAGE DOORS HINGED To 5-8788		1	1	1	
2	066535	SWITCH SUPPORT / W/BAGGAGE DOORS HINGED From 5-8789		1	1	1	
2	066639	SWITCH SUPPORT / W/BAGGAGE DOORS STD From 5-8789	1	1	1	1	
3	330268	LAMP ASSY 24V / BAGGAGE COMPARTMENT LAMP / W/ONE BULB 10W To 5-8421	AR	AR	AR	AR	
3	330370	LAMP ASSY 24V / BAGGAGE COMPARTMENT LAMP / W/2 BULB 10W From 5-8422 To 5-8673	AR	AR	AR	AR	
3	330372	LAMP ASSY 24V / BAGGAGE COMPARTMENT LAMP W//2 BULBS 5W From 5-8674 To 7-9224	AR	AR	AR	AR	
4	330267	. SUPPORT / SS / TO FIX LAMP / W/ONE BULB To 5-8421	1	1	1	1	
4	330369	. SUPPORT / SS / TO FIX LAMP / W/2 BULBS From 5-8422 To 7-9224	1	1	1	1	
5	063435	. CABLE ASSY / W/ONE BULB To 5-8421	1	1	1	1	
5	066271	. CABLE ASSY / W/2 BULBS From 5-8422 To 7-9224	1	1	1	1	
6	562278	. BULB / 10WATT-24VOLTS / SAE# 6429 To 5-8421	AR	AR	AR	AR	
6	562411	. BULB / 5WATT-24VOLTS / SAE # 6424 From 5-8422 To 7-9224	2	2	2	2	
7	830139	. LAMP ASSY / W/ONE BULB To 5-8421	1	1	1	1	
7	830183	. LAMP ASSY / W/2 BULBS From 5-8422 To 7-9224	1	1	1	1	
8	330224	LAMP ASSY 24V / BAGGAGE COMPARTMENT LAMP W/2 BULBS G4-10W From 7-9225	AR	AR	AR	AR	
. NS	330396	. BULB / 10 WATTS -28VOLTS / SAE# G4-28 From 7-9225	2	2	2	2	
13	430467	LAMP ASSY W/CONNECTOR To 3-8164	AR	AR	AR	AR	
14	430468	. SUPPORT To 3-8164	1	1	1	1	
15	930168	. LAMP ASSY BACK-UP To 3-8164	1	1	1	1	
16	930170	. . LENS To 3-8164	1	1	1	1	
17	930171	. . RING / CHROME To 3-8164	1	1	1	1	
17	560136	. BULB / 15WATT-12VOLTS / SAE# 1003 To 3-8164	1	1	1	1	
18	561605	. CONNECTOR / WEATHER PACK / PH 1C / BLACK / PED 12010996 To 3-8164	1	1	1	1	
18	561567	. PIN TERMINAL / 20-18 / PED 12089040 To 3-8164	2	2	2	2	
18	561565	. CABLE SEAL / GREEN / PED 15324982 To 3-8164	2	2	2	2	
NS	430534	SUPPORT LAMP / OVER REAR JUNCTION BOX	1	1	1	1	
19	430567	LAMP ASSY W/CONNECTOR / "U" SHAPE From 4-8165	AR	AR	AR	AR	
20	430568	LAMP ASSY W/CONNECTOR / "L" SHAPE From 4-8165 To 4-8229	AR				
21	052503	. SUPPORT LAMP / "U" SHAPE From 4-8165	1	1	1	1	
22	430456	. SUPPORT LAMP / "L" SHAPE From 4-8165 To 4-8229	1	1	1	1	
NS	506338	. RUBBER CHANNEL / 1/16" x 1/4" INT "U" SHAPE / ROUND C.T.L. From 4-8165	1	1	1	1	
23	930382	. GROMMET OBLONG, BLACK From 4-8165	1	1	1	1	
24	930383	. LAMP ASSY CLEAR SEALED / BACK-UP 12V From 4-8165	1	1	1	1	
26	562253	SWITCH / M/ON-OFF-M/ON / S.P.S.T. To Y-7396	1				C
26	563047	SWITCH ASSY / WATERPROOF From Y-7397	1				
27	560241	RUBBER PROTECTOR, TOGGLE SWITCH	1				
30	064856	SUPPORT SWITCH	1				A

From Y-7046 To 8-9339		Date:07/2024	PAGE:Y2-0665-10

SWITCHES, LIGHTS, AJAR - UNDER FLOOR

Item#	Part	Description	XLII 45	XLII MTH40	XLII MTH45	XLII MTH45E	NOTES
31	064554	SWITCH ASSY W/CONECTOR	1				A
31	562484	. SWITCH S.P.S.T. / N.C.	1				
NS	561690	. CONNECTOR / WEATHER PACK / SH 2C / BLACK / PED 12015792	1				
NS	561565	. CABLE SEAL / GREEN / PED 15324982	2				
NS	561578	. SOCKET TERMINAL / 16-14 / PED 12010182	2				
32	561891	. . CAP RUBBER	1				
33	064099	DECAL "PRIME PUMP" / ENGLISH	1				
33	066049	DECAL "PRIME PUMP" / ENGLISH & SPANISH	1				
NS	064994	CABLE ASSY / FUEL PUMP ELECTRIC	1				
34	065466	DECAL / LAVATORY PUMP FLUSH / ENGLISH & FRANCAIS From 3-8021	1				B
34	066050	DECAL / LAVATORY PUMP FLUSH / ENGLISH & SPANISH	1				
34	067576	DECAL / LAVATORY PUMP FLUSH / ENGLISH & SPANISH	1				
40	066300	SUPPORT ASSY W/SWITCHES		1	1	1	
40	066365	. SUPPORT REAR ENGINE SWITCHES		1	1	1	
41	064554	. SWITCH ASSY W/CONECTOR		1	1	1	
41	562484	. . SWITCH S.P.S.T. / N.C.		1	1	1	
41	561690	. . CONNECTOR / WEATHER PACK / SH 2C / BLACK / PED 12015792		1	1	1	
41	561565	. . CABLE SEAL / GREEN / PED 15324982		2	2	2	
41	561578	. . SOCKET TERMINAL / 16-14 / PED 12010182		2	2	2	
42	561891	. . CAP RUBBER		1	1	1	
43	066376	. DECAL REAR ENGINE START....		1	1	1	
44	064362	. SWITCH ASSY / WATERPROOF		1	1	1	
45	563609	. SWITCH / OFF-ON / S.P.S.T. / SEALED W/WIRES ASSY		1	1	1	
50	505056	ANTISTATIC STRAP / UNDER STRUCTURE	1				
NS	065749	KIT SWITCH LAVATORY PUMP INSTALLATION	1				
57	065380	KIT ENTRANCE DOOR SWITCH To Y-7396	1				
NS	065757	KIT ENGINE COMPARTMENT LAMP	1	1	1	1	
. NS	430568	. LAMP ASSY W/CONNECTOR / "L" SHAPE	1	1	1	1	
. NS	064821	. PIGTAIL ASSY	1	1	1	1	
. NS	5001040	. SCREW TC PAN PH #6-32x3/4 SS	2	2	2	2	
. NS	502637	. WASHER FL .200x.437x.037 SS	2	2	2	2	
. NS	IS-00090	. SEE INSTRUCTION SHEET	1	1	1	1	
		A) USE WITH FUEL PUMP AND LAVATORY PUMP					
		B) FOR PRODUCT IMPROVMENT ASK KIT #065749 FOR VEHICULE Up to 3-8020					
		C) FOR PRODUCT IMPROVMENT ASK KIT #065380 FOR VEHICULE Up to Y-7396					

From Y-7046 To 6-8906		Date:07/2024	PAGE:Y2-0665-20
CABLE TRAILER - INSTALLATION - BUS			

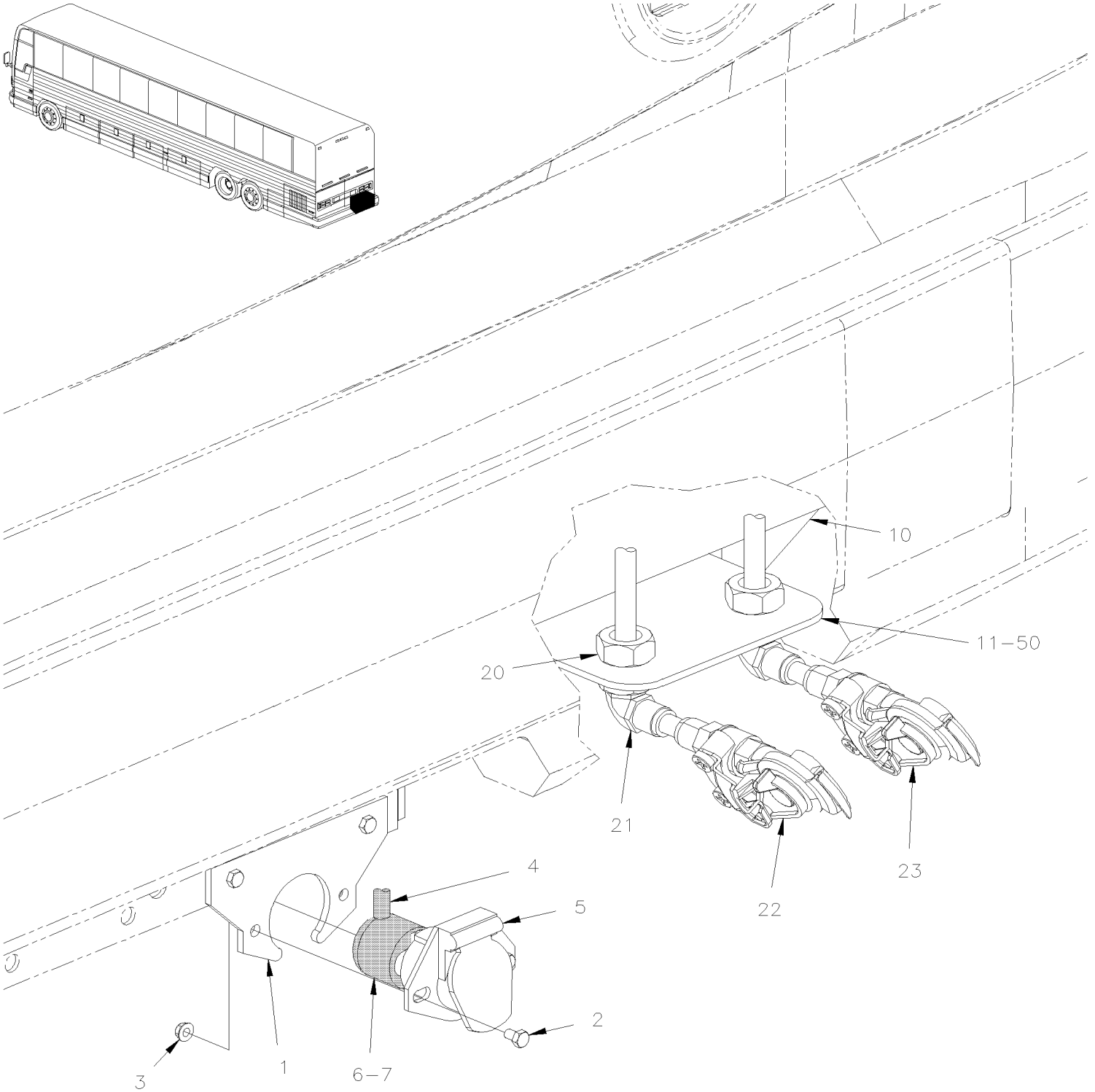

From Y-7046 To 6-8906		Date:07/2024	PAGE:Y2-0665-20

CABLE TRAILER - INSTALLATION - BUS

Item#	Part	Description	XLII 45	XLII MTH40	XLII MTH45	XLII MTH45E	NOTES
1	410998	SUPPORT ELECTRICAL CONECTOR	1				
2	502830	SCREW CAP HEX M6-1.0x20 G8.8 N500	4				
3	502681	NUT HEX NYRT M6-1.0 N500 G8	4				
4	065831	CABLE ASSY / TRAILER CONNECTOR	1				
5	563352	CONNECTOR MALE 7C / POLLAK 11-723	1				
6	563353	BOOT PROTECTOR / POLLAK 11-761	1				
7	504637	CABLE TIE / 3/16" x 13"	AR				
10	410996	PROTECTOR VALVE CONNECTOR	1				
11	410997	SUPPORT QUICK CONNECT HOSE CONNECTOR	1				
20	501796	BULKHEAD COUPLING / PIPE FITTING / 1/2NPT-Fx1/2NPT-Fx1 1/2 BR	2				
21	501713	MALE ELBOW 90º / PIPE FITTING / 1/2NPT-Mx1/2NPT-M BR	2				
22	641938	GLANDHAND W/DUST COVER "RED"	1				
23	641939	GLANDHAND W/DUST COVER "BLUE"	1				
50	**Y2-1220-50**	**TRAILER VALVE INSTALLATION**					

From Y-7046 To 8-9339		Date:07/2024	PAGE:Y2-0666-00
BLOCK HEATER RECEPTACLE			

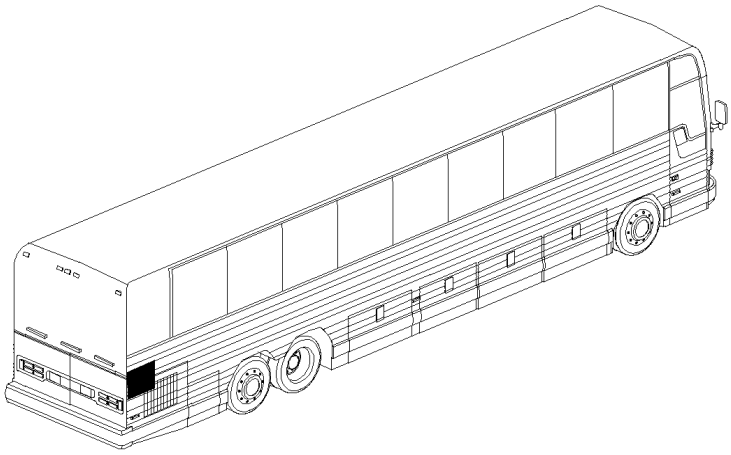

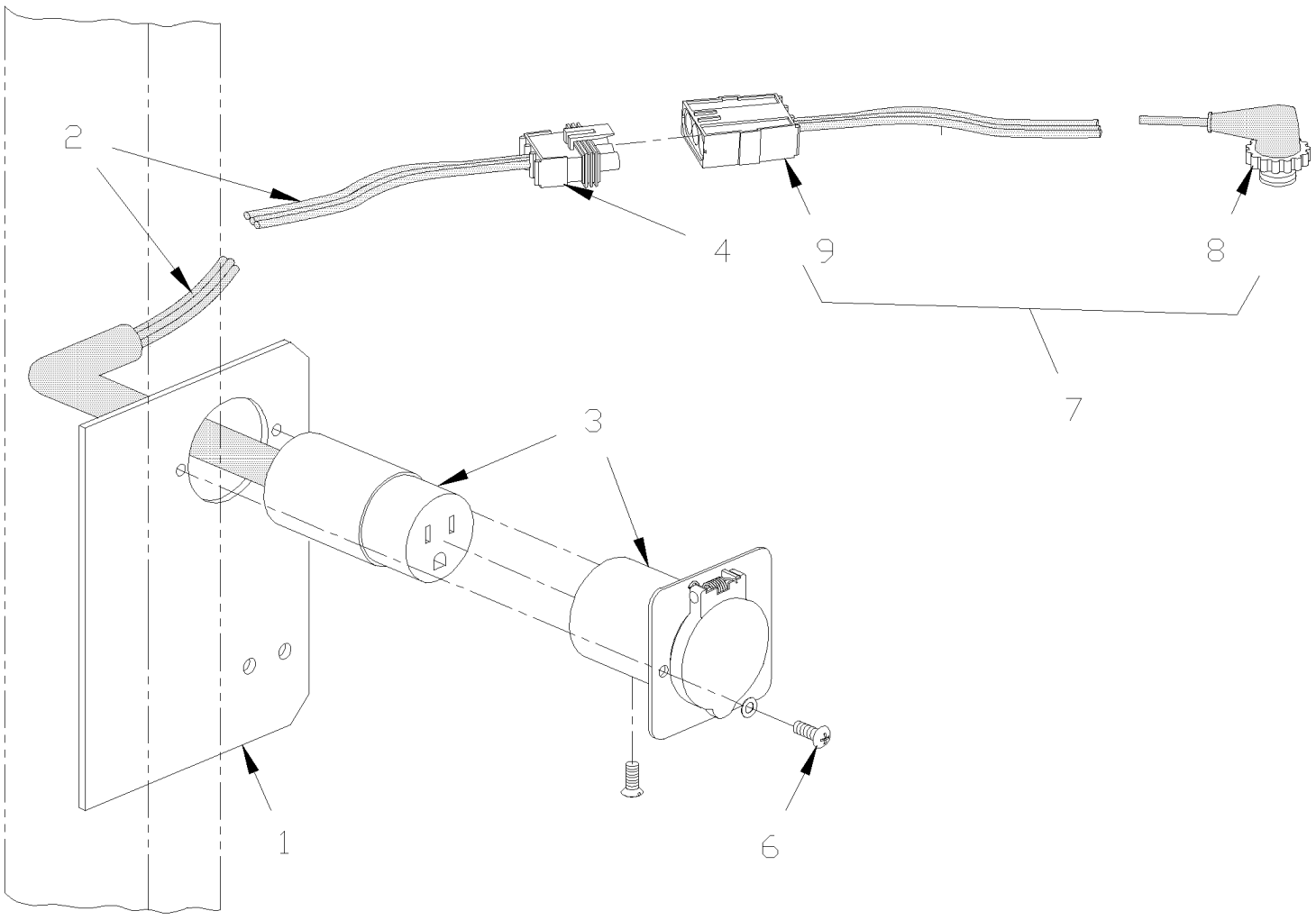

From Y-7046 To 8-9339		Date:07/2024	PAGE:Y2-0666-00

BLOCK HEATER RECEPTACLE

Item#	Part	Description	XLII 45	XLII MTH40	XLII MTH45	XLII MTH45E	NOTES
1	213957	SUPPORT BACK-UP ALARM	1	1	1	1	
2	065517	CABLE ASSY / 110V BLOCK HEATER	1	1	1	1	
3	561572	. RECEPTACLE ASSY W/CORD	1	1	1	1	
NS	561786	. CABLE SEAL / GRAY / PED 15324980	2	2	2	2	
4	561782	. CONNECTOR / WEATHER PACK / SH 3C / BLACK / PED 12015793	1	1	1	1	
NS	561578	. SOCKET TERMINAL / 16-14 / PED 12010182	3	3	3	3	
NS	561783	. SEAL PLUG CAVITY / GREEN / PED 12010300	2	2	2	2	
6	500654	SCREW TC BDG PH #8-32x1/2 Z050	2	2	2	2	
7	063295	CABLE ASSY / 110V BLOCK HEATER ENGINE SECTION	1	1	1	1	
8	560411	. HEATER PLUG ASSY	1	1	1	1	
NS	562028	. CONVOLUTED TUBING / UNSLIT / BLACK / .350"	AR	AR	AR	AR	
9	561781	. CONNECTOR / WEATHER PACK / PH 3C / BLACK / PED 12010717	1	1	1	1	
NS	561786	. CABLE SEAL / GRAY / PED 15324980	3	3	3	3	
NS	561568	. PIN TERMINAL / 16-14 / PED 12089305	3	3	3	3	
NS	560410	BLOCK HEATER	1	1	1	1	

From Y-7046 To 6-8906		Date:07/2024	PAGE:Y2-0670-10
BATTERIES CHARGER - INSTALLATION			

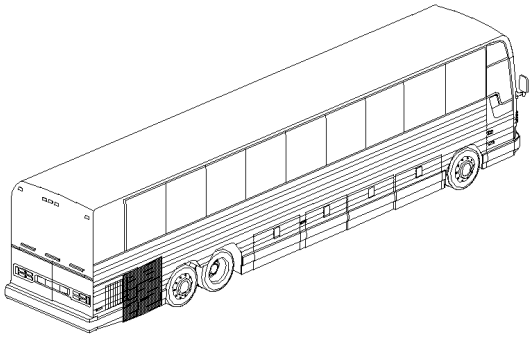

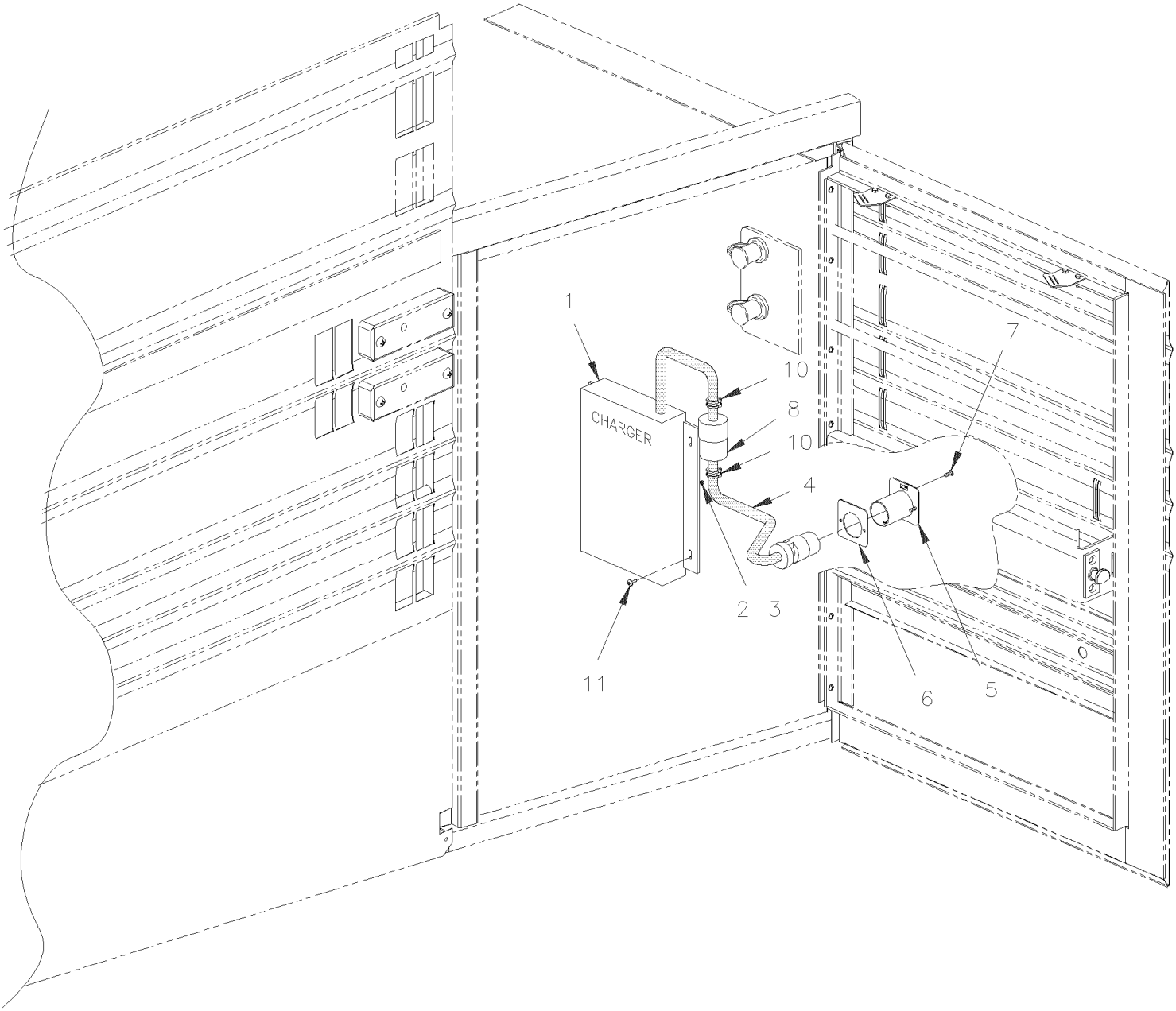

From Y-7046 To 6-8906		Date:07/2024	PAGE:Y2-0670-10

BATTERIES CHARGER - INSTALLATION

Item#	Part	Description	XLII 45	XLII MTH40	XLII MTH45	XLII MTH45E	NOTES
1	562967	BATTERY CHARGER 24V	1				
2	502565	NUT HEX M6-1.0 SS	4				
3	502570	WASHER LO SPT 6.1x11.8x1.6 SS	4				
4	065297	CABLE ASSY / 110V BATTERIES CHARGER	1				
4	065462	CABLE ASSY / 110V BATTERIES WARMER INSTALL	1				A
5	561572	. RECEPTACLE ASSY W/CORD	1				
6	064388	. FIXATION RING	1				
7	502677	. SCREW MA RND PH M4-0.7x25 SS	4				
8	561932	. CONNECTOR / 15 AMPS / HUBBELL 5269-C	1				
10	952631	CLAMP / 3/4" I.D.	2				
11	504637	CABLE TIE / 3/16" x 13"	2				
NS	065445	DECAL / BATTERY HEATING & WARMER 164MM x 30MM	1				A
		A) USE WITH BATTERIES WARMER					

From Y-7046 To 8-9339		Date:07/2024	PAGE:Y2-0675-00
SYSTEM - "VORAD"			

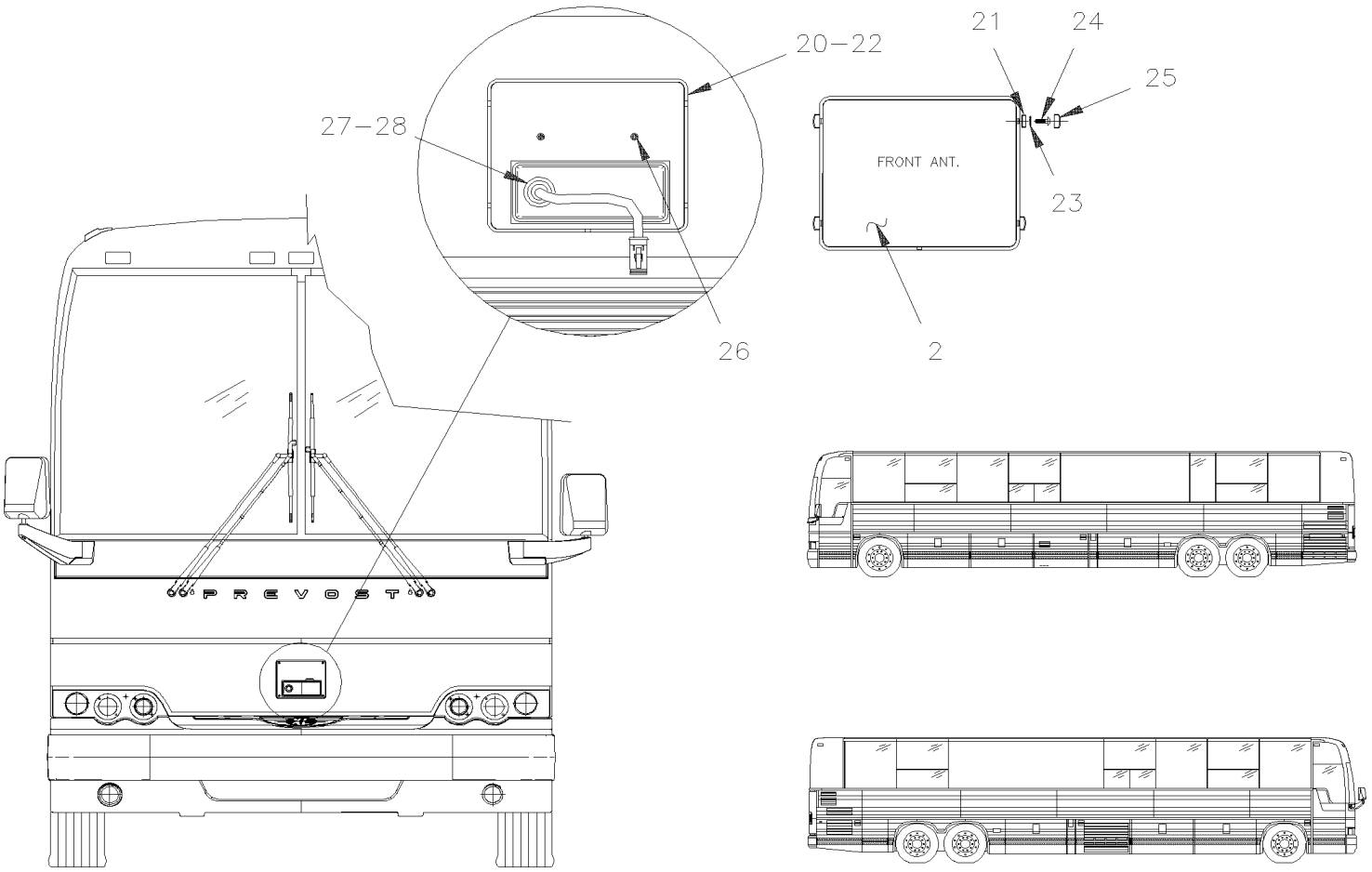

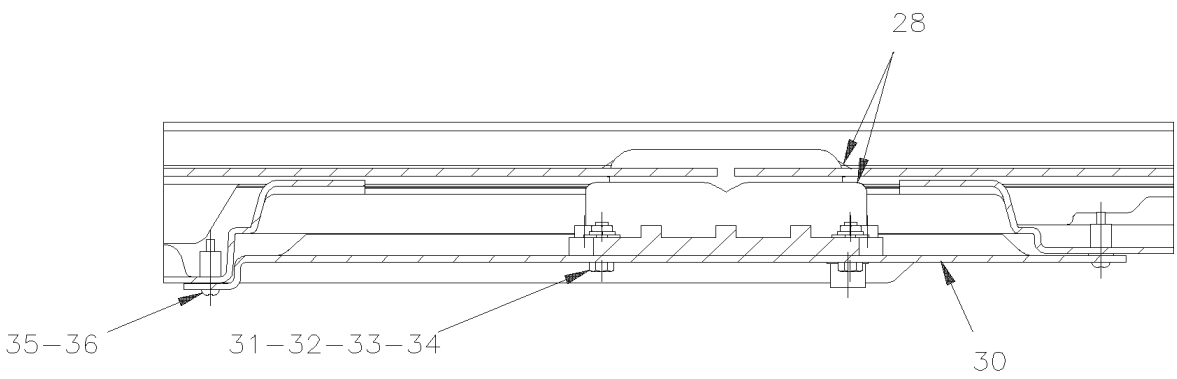

DETAIL A

From Y-7046 To 8-9339		Date:07/2024	PAGE:Y2-0675-00
SYSTEM - "VORAD"			

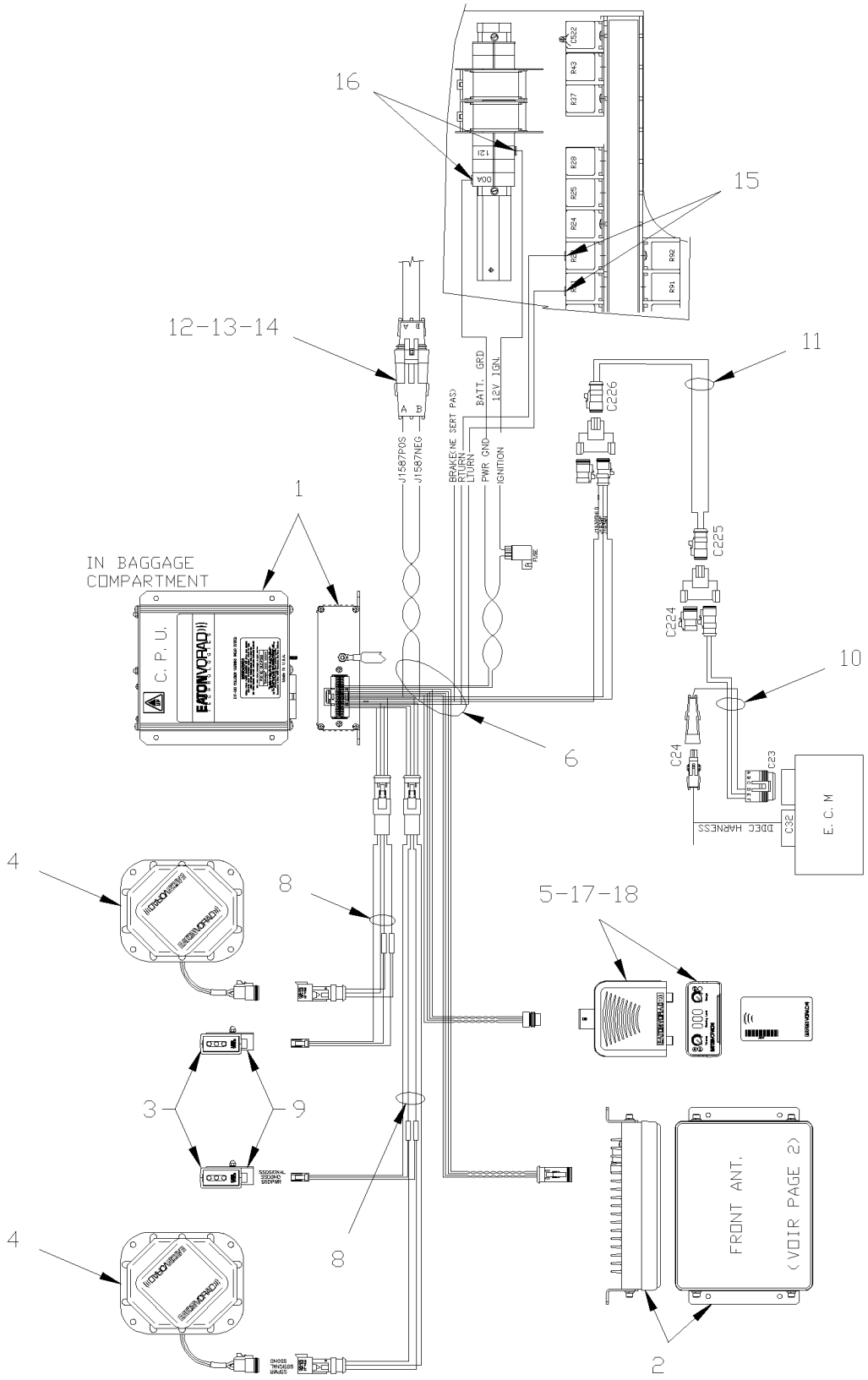

From Y-7046 To 8-9339		Date:07/2024	PAGE:Y2-0675-00

SYSTEM - "VORAD"

Item#	Part	Description	XLII 45	XLII MTH40	XLII MTH45	XLII MTH45E	NOTES
1	563192	MODULE CONTROL "VORAD"			1		
NS	382326	SUPPORT, MODULE CONTROL			1		
2	563188	FRONT SENSOR ANTENNA			1		
3	563189	FRONT SENSOR & DISPLAY			2		
4	563191	SIDE SENSOR ANTENNA			2		
5	563190	DRIVER`S DISPLAY			1		
6	065608	CABLE ASSY / MAIN			1		
8	065609	CABLE ASSY / SIDE ANTENNA			2		
9	7770276	BRACKET FRONT SENSOR, LH			1		
9	7770277	BRACKET FRONT SENSOR, RH			1		
10	065988	CABLE ASSY / ECM			1		
11	065592	CABLE ASSY / J1939			1		
12	561566	CONNECTOR / WEATHER PACK / PH 2C / BLACK / PED 12010973			1		
13	561568	PIN TERMINAL / 16-14 / PED 12089305			2		
14	561565	CABLE SEAL / GREEN / PED 15324982			2		
15	561181	TAB RECEPTACLE TERMINAL / 12 / AMP 60508-2			2		
16	561700	SPRING SPADE TERMINAL #8 / 16-14 / AMP 52936			2		
17	382008	SUPPORT, DRIVER`S DISPLAY			1		
18	5001479	SCREW TP BDG PH #6x3/8 SS EMN			8		
20	382009	BOX , FRONT ANTENNA			1		
21	504399	WASHER RETAINER SNAP CAP #10			4		
22	506785	TAPE RUB ADH2 CC POL 1/16" X 1/4" X 200' / BLACK I1C-N-A			AR		
23	5001544	WASHER LO EXT .195x.410x.025 SS			4		
24	5001543	SCREW MA PAN PH #10-32x1/2 SS			4		
25	504403	SNAP CAP #8 FINISHING BLACK			4		
26	500952	SCREW TP BDG PH #8x1/2 SS			2		
27	504671	GROMMET / .687x1.000x.125x.437x1.312			1		
28	682462	ADHESIVE SIKA #252 / BLACK / 310ml CARTRIDGE			AR		
30	382325	SUPPORT, SIDE SENSOR ANTENNA			2		
31	502622	SCREW CAP HEX M6-1.0x20 SS BK			12		
32	500411	WASHER FL .260x.697x.050 SS			8		
33	502570	WASHER LO SPT 6.1x11.8x1.6 SS			12		
34	502565	NUT HEX M6-1.0 SS			12		
35	500589	NUT WELL M4-0.7x13.5			8		
36	502677	SCREW MA RND PH M4-0.7x25 SS			8		
NS	563193	VDO CASSETTE DRIVER`S TRAINING "VORAD CRUISE"			AR		
NS	563213	DECAL "SMART CRUISE"			1		

		Date:07/2024	Y2-07
TRANSMISSION			

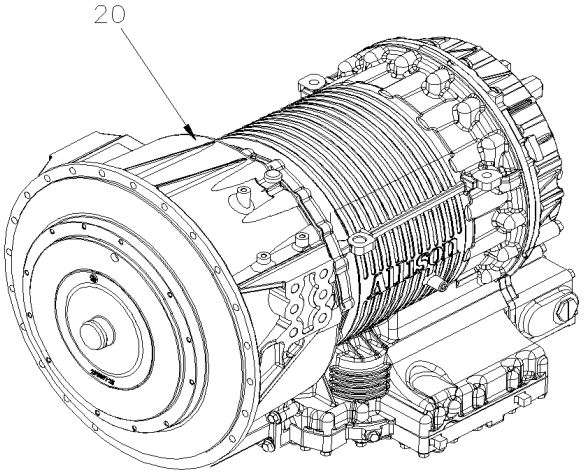

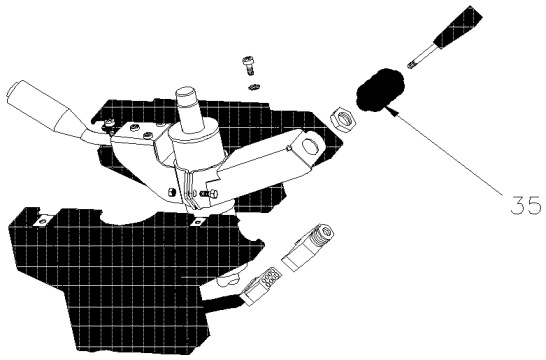

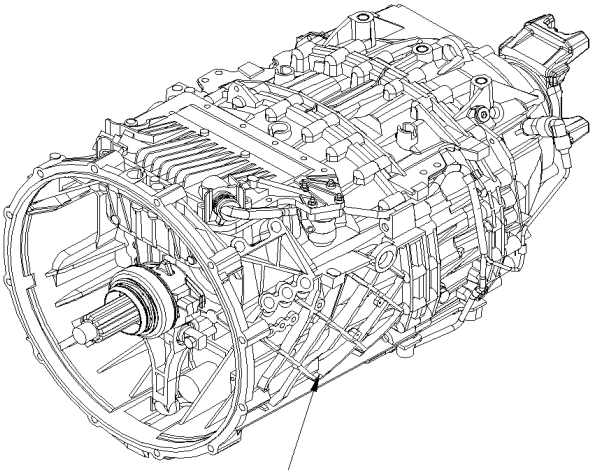

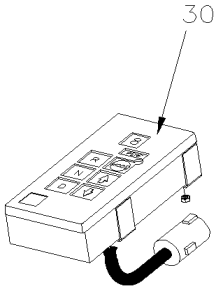

		Date:07/2024	Y2-07

TRANSMISSION

Item#	Part	Description	XLII 45	XLII MTH40	XLII MTH45	XLII MTH45E	NOTES
5	Y2-0700-00	TRANSMISSION "EATON" - INSTALLATION From 1-7377 To 1-7461					
5	Y2-0700-01	TRANSMISSION "ZF" - INSTALLATION From Y-7462 To 6-8906					
10	Y2-0700-05	TRANSMISSION "ZF" - AIR SYSTEM From Y-7462 To 6-8906					
15	Y2-0705-00	TRANSMISSION "ZF-ASTRONIC" From Y-7462 To 6-8906					
15	Y2-0705-05	GEARBOX HOUSING From 4-8165 To 6-8906					
15	Y2-0705-10	INPUT SHAFT From 4-8165 To 6-8906					
15	Y2-0705-15	LAYSHAFT From 4-8165 To 6-8906					
15	Y2-0705-20	MAIN SHAFT From 4-8165 To 6-8906					
15	Y2-0705-25	REVERSE GEAR From 4-8165 To 6-8906					
15	Y2-0705-30	GEAR SHIFT SYSTEM From 4-8165 To 6-8906					
15	Y2-0705-35	OUTPUT HOUSING From 4-8165 To 6-8906					
15	Y2-0705-40	OUTPUT FLANGE & PLANETARY DRIVE From 4-8165 To 6-8906					
15	Y2-0705-45	SYNCHRONIZER ASSY From 4-8165 To 6-8906					
20	Y2-0750-00	AUTOMATIC TRANSMISSION - "WORLD" WITH DETROIT S-60 From Y-7046 To 3-8164					
20	Y2-0750-01	AUTOMATIC TRANSMISSION - "WORLD" WITH DETROIT S-60 From 4-8165 To 8-9339					
30	Y2-0755-15	SHIFTER ELECTRONIC - "WORLD" TRANSMISSION From Y-7046 To 8-9339					
35	Y2-0760-00	RETARDER SELECTOR SWITCH - "WORLD" From Y-7046 To 8-9339					

From 1-7377 To 1-7461		Date:07/2024	PAGE:Y2-0700-00
TRANSMISSION "EATON" - INSTALLATION			

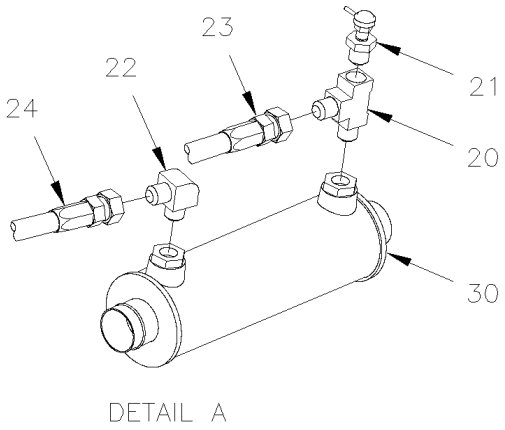

DETAIL A

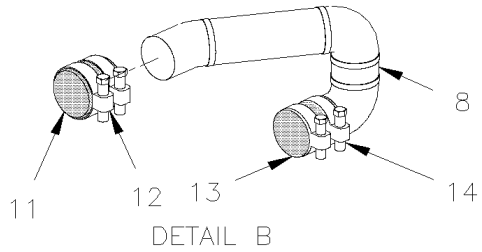

DETAIL B

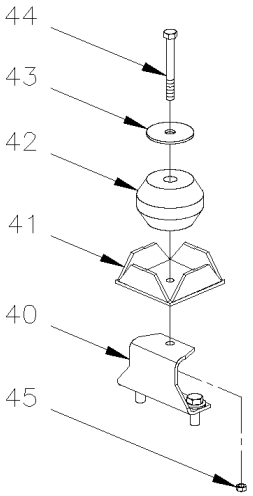

DETAIL C

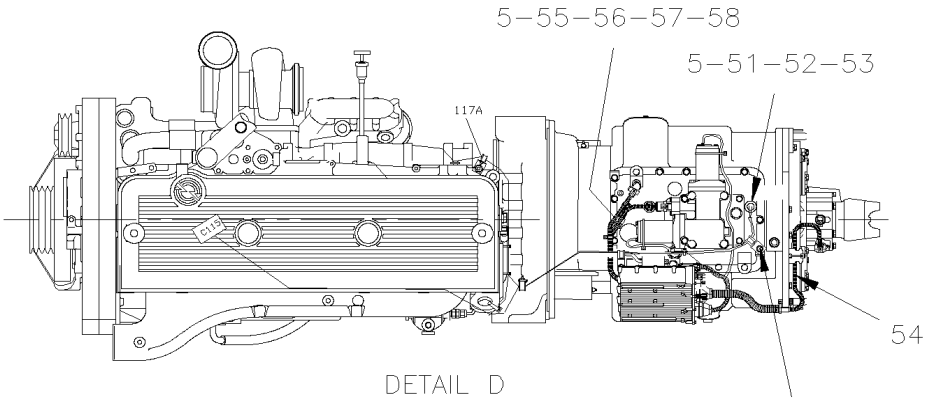

DETAIL D

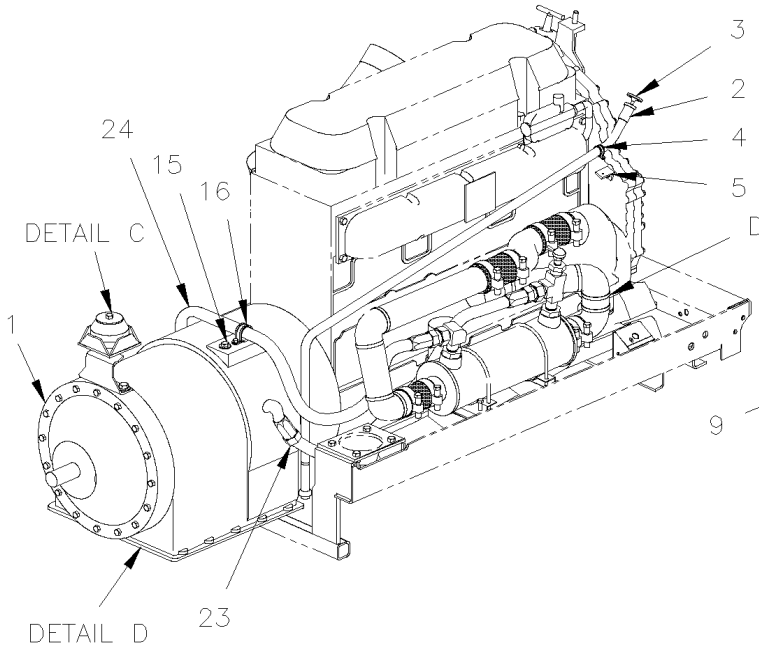

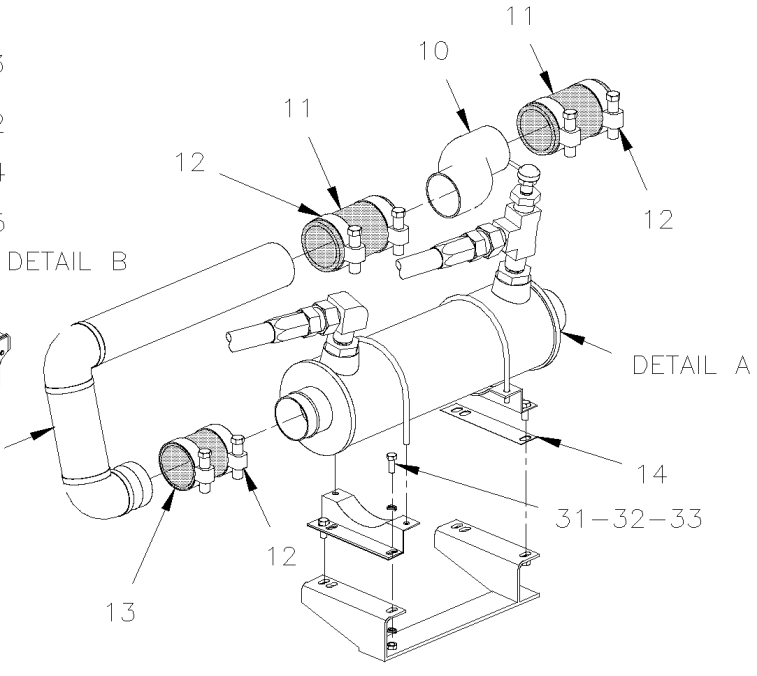

From 1-7377 To 1-7461		Date:07/2024	PAGE:Y2-0700-00

TRANSMISSION "EATON" - INSTALLATION

Item#	Part	Description	XLII 45	XLII MTH40	XLII MTH45	XLII MTH45E	NOTES
1	571758	TRANSMISSION "EATON" AST	1				
NS	571762	KIT DRIVE RING AST	1				
NS	684016	OIL TRANSYND TRANSMISSION "WORLD"	42				
NS	5001427	SCREW CAP HEX 7/16-14x1 3/8 G5 Z050	12				
NS	500853	WASHER LO EXT .437x.760x.036 Z050	12				
2	071210	OIL GAUGE TUBE	1				
NS	5011219	. SLEEVE / JIC 37° FITTING / #16 STL	1				
NS	5011220	. NUT / JIC 37° FITTING / #16JIC-F STL	1				
3	571764	TRANS DIPSTICK 2030.3MM	1				
4	952635	CLAMP / 1" I.D.	1				
5	070368	SUPPORT	1				
6	500069	SCREW CAP HEX M8-1.25x16 G10.9 DP	1				
NS	5001003	WASHER LO SPT 8.1x12.7x2.0 Z050	1				
8	070890	PIPE ASSY	1				
9	051854	PIPE ASSY	1				
10	N.S.P.	PIPE ASSY / WATER PUMP & COOLER / (23005899)	1				2
11	051604	HOSE 2 3/4" I.D. 130MM	2				
. NS	503395	. HOSE SILICONE 4PLY 2 3/4" I.D. x 3'	AR				
12	504562	HOSE CLAMP / 2"3/4-3"5/8 / C.T. 350	2				
13	070969	HOSE 3" I.D. 140MM	1				
14	070892	SHIM / ENGINE CRADLE & OIL COOLER SUPPORT 26x166x1/4" / 140c/c	2				
15	060840	SUPPORT HARNESS	1				
NS	500270	WASHER FL .406x1.000x.063 SS	1				
16	952637	CLAMP / 1"1/16 I.D.	4				
16	952639	CLAMP / 1"1/4 I.D.	2				
NS	502677	SCREW MA RND PH M4-0.7x25 SS	4				
NS	502524	NUT HEX M4-0.7 Z050	4				
NS	502636	WASHER LO SPT 4.1x7.6x0.9 Z050	6				
19	070968	HOSE 3" I.D. 185MM	2				
20	5011083	ADAPTER TEE / SAE 45º FITTING / #16FL-Mx1/2NPT-Fx#16ORB-M TO USED W/TEMP SENDER	1				
21	562829	SENSOR / OIL TEMPERATURE / (DASHBOARD)	1				
22	5011223	MALE ELBOW 90° / JIC 37° FITTING / #12JIC-Mx#16ORB-M STL	1				
23	071213	HOSE ASSY / #16 1118MM	1				
24	071214	HOSE ASSY / #12 1880MM	1				
30	550708	OIL COOLER W/1" NPT / (2950137)					
31	502589	SCREW CAP HEX M8-1.25x25 G8.8 Z050	4				
32	502543	NUT HEX M8-1.25 Z050	4				
33	5001003	WASHER LO SPT 8.1x12.7x2.0 Z050	8				
40	071212	SUPPORT	1				
41	070950	GUIDE REAR	1				
42	630118	RUBBER BUMPPER	1				
43	550642	WASHER	1				

From 1-7377 To 1-7461		Date:07/2024	PAGE:Y2-0700-00

TRANSMISSION "EATON" - INSTALLATION

Item#	Part	Description	XLII 45	XLII MTH40	XLII MTH45	XLII MTH45E	NOTES
44	500106	SCREW CAP HEX 1/2-20x6 G5 PT Z050	1				
45	500718	NUT HEX STO 1/2-20 Z050	1				
NS	500958	WASHER FL .531x1.062x.095 SS	1				
NS	065402	CABLE ASSY / ECU & FRONT SHIFTER	1				
50	061025	SUPPORT	1				
51	561012	PROTECTOR, TRANS. SWITCH	1				
52	064765	CABLE ASSY BACK-UP	1				
53	684013	RUBBER PROTECTOR / COLOR GUARD 14.5oz	AR				
54	065410	CABLE ASSY / SPEED SENSOR	1				
55	500574	SCREW MA TR PH #10-24x1 1/4 SS	2				
56	500786	NUT HEX #10-24 Z050	2				
57	500440	WASHER FL .250x.562x.065 Z050	2				
58	952631	CLAMP / 3/4" I.D.	2				
NS	071216	DECAL "EATON FULLER TRANSMISSIONS"	1				
		2) NOT SOLD BY PREVOST (SEE MANUFACTURING PART NUMBER AT END OF DESCRIPTION LINE)					

From Y-7462 To 6-8906		Date:07/2024	PAGE:Y2-0700-01
TRANSMISSION "ZF" - INSTALLATION			

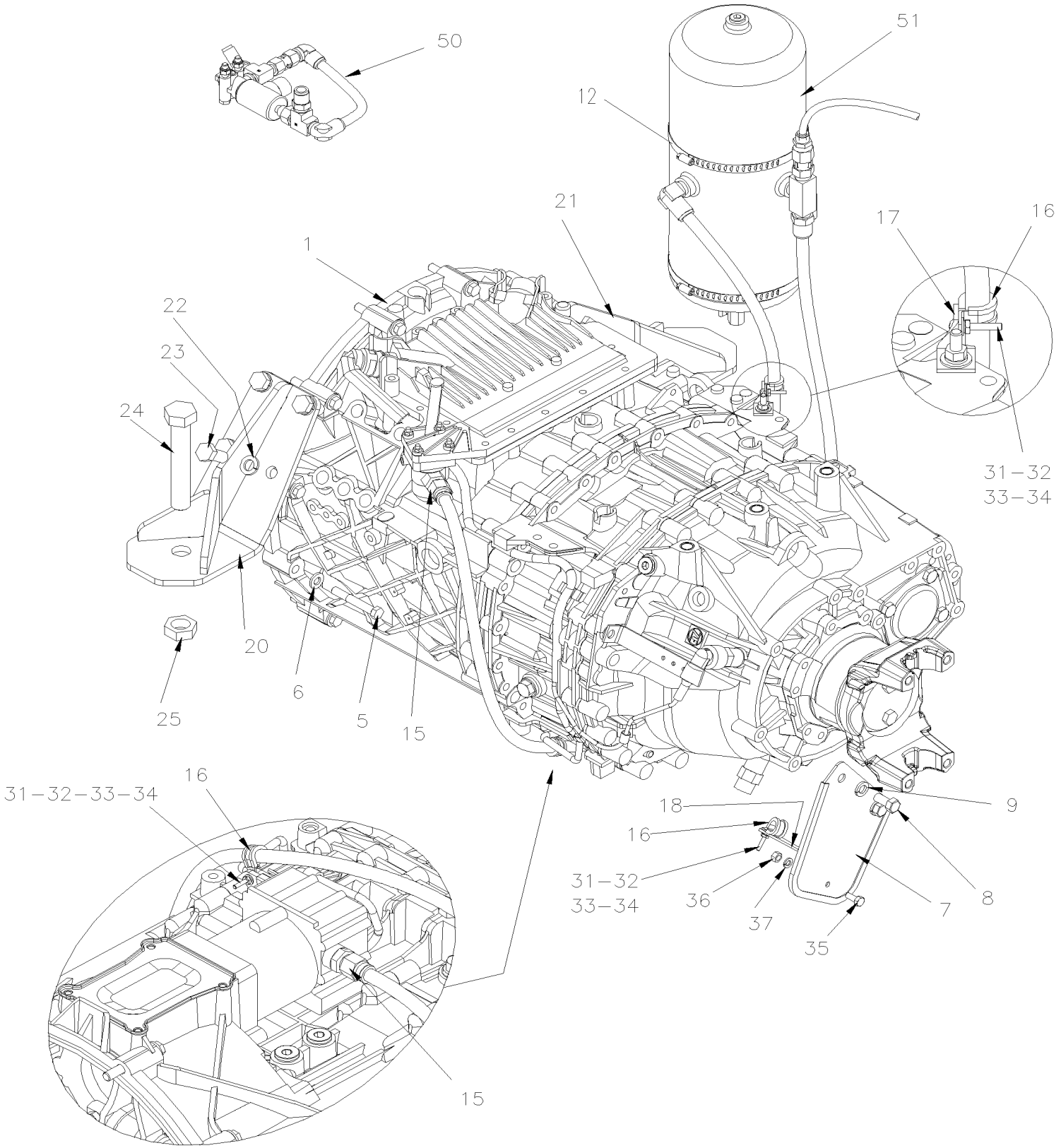

From Y-7462 To 6-8906		Date:07/2024	PAGE:Y2-0700-01

TRANSMISSION "ZF" - INSTALLATION

Item#	Part	Description	XLII 45	XLII MTH40	XLII MTH45	XLII MTH45E	NOTES
1	571772	TRANSMISSION "ZF" W/O INTARDER / W10 SPEEDS	1				
1	571775	CLUTCH ASSY	1				
1	571776	PRESSURE PLATE	1				
1	507113	BALL BEARING	1				
5	955554	SCREW CAP HEX 7/16-14x3 G8 ZP	24				
6	5001567	WASHER FL .474x.937x.112 CP STP	12				
7	071293	PROTECTOR CABLE RUBBER	1				
8	500850	SCREW CAP HEX M12-1.75X25 G8.8 Z050	2				
9	500482	WASHER LO SPT .506x.873x.125 Z050	2				
12	504649	HOSE CLAMP / 4"5/8-7"1/2 SS	1				
15	641977	MALE CONNECTOR / PUSH-IN FITTING / #4xM16NPT-M BR	1				
16	952629	CLAMP / 5/8" I.D.	3				
17	061027	SUPPORT 2"1/2 LG	2				
18	070368	SUPPORT	3				
20	012282	SUPPORT REAR R.H. W/"ZF" TRANS	1				
21	012278	SUPPORT REAR L.H. W/"ZF" TRANS	1				
22	502884	WASHER LO SPT 16.2x27.4x3.5 N500	8				
23	5001591	SCREW CAP HEX M16-1.5x35 G10.9 DP	8				
24	500571	SCREW CAP HEX M24-3.0x150 G10.9 N500	2				
25	500570	NUT HEX STO M24-3.0 GR.10 N500	2				
31	500574	SCREW MA TR PH #10-24x1 1/4 SS	3				
32	500786	NUT HEX #10-24 Z050	3				
33	500470	WASHER LO SPT .193x.334x.047 Z050	3				
34	500964	WASHER FL .203x.500x.047 Z050	3				
35	502862	SCREW CAP HEX M8-1.25x20 G8.8 N500	1				
36	502851	NUT HEX M8-1.25 N500	1				
37	500942	WASHER LO SPT 8.1x14.8x2.0 N500	1				
50	**Y2-0700-05**	**TRANSMISSION "ZF" - AIR SYSTEM**					
51	**Y2-1203-01**	**AIR TANK - INSTALLATION**					

From Y-7462 To 6-8906		Date:07/2024	PAGE:Y2-0700-05
TRANSMISSION "ZF" - AIR SYSTEM			

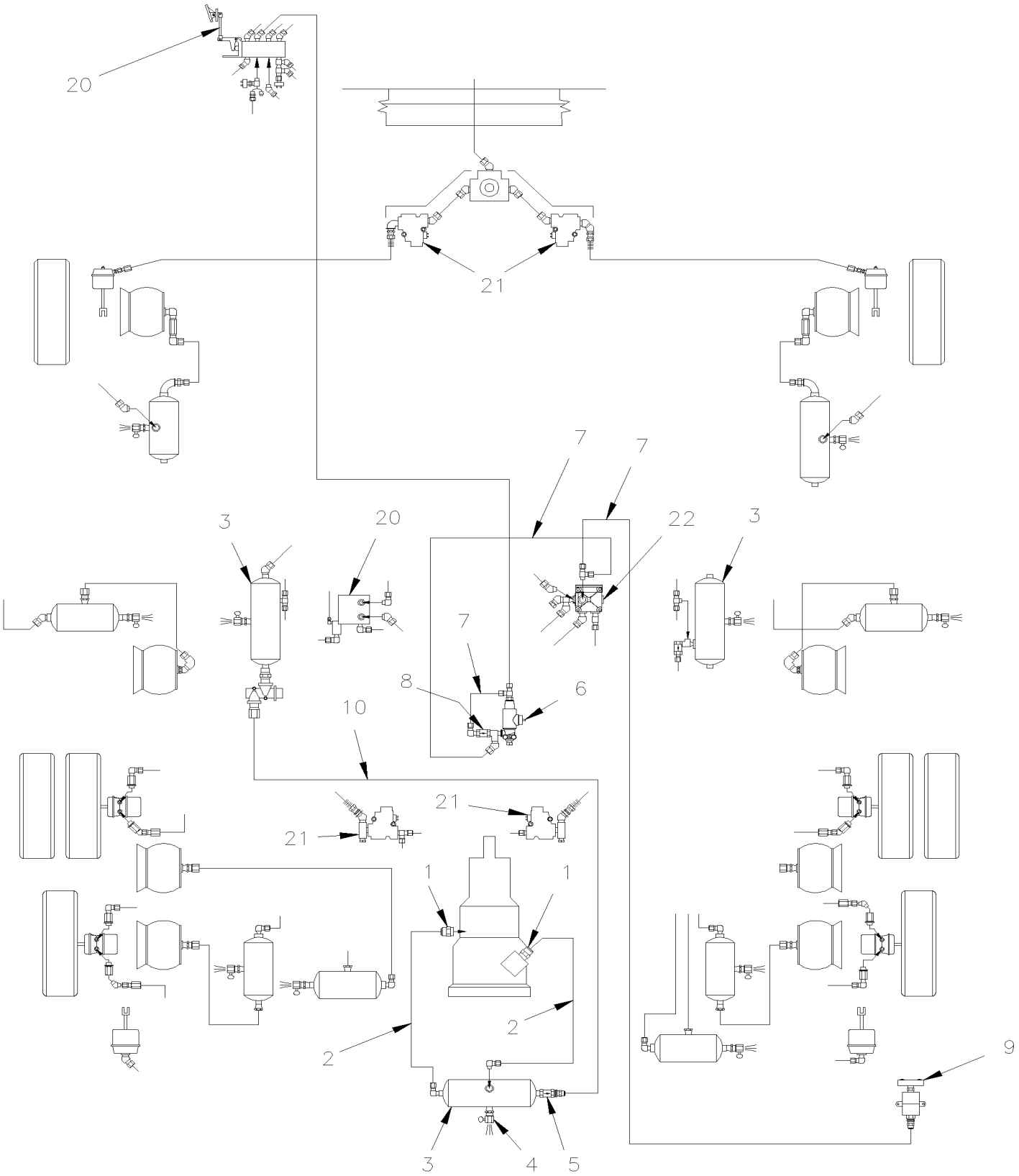

From Y-7462 To 6-8906		Date:07/2024	PAGE:Y2-0700-05

TRANSMISSION "ZF" - AIR SYSTEM

Item#	Part	Description	XLII 45	XLII MTH40	XLII MTH45	XLII MTH45E	NOTES
1	641977	MALE CONNECTOR / PUSH-IN FITTING / #4xM16NPT-M BR	2				
2	503540	TUBE, NYLON 5/8 O.D. / BLACK S.L.	AR				
3	**Y2-1203-01**	**AIR TANK - INSTALLATION**					
4	641043	DRAIN VALVE 1/4 NPT M	1				
5	640123	VALVE, CHECK 1/2 NPT SC-1	1				
. NS	641401	. VALVE, CHECK 1/2 NPT SC-1	1				
6	641950	VALVE, "ATC" 12VOLT	1				
7	503463	TUBE, NYLON 3/8 O.D. / GREEN S.L.	AR				
8	640135	VALVE, CHECK 1/4 NPT	1				
9	641462	PRESSURE SWITCH N.O. 4PSI / ¼NPT W/10-32 / SL-5 BRAKE	1				
10	503404	TUBE, NYLON 3/8 O.D. / BLACK S.L.	AR				
20	**Y2-1220-10**	**BRAKE PEDAL VALVE - "BENDIX"**					
21	**Y2-1250-00**	**ANTI-LOCK BRAKING SYSTEM**					
22	**Y2-1200-00**	**BRAKE AIR SYSTEM**					

From Y-7462 To 6-8906		Date:07/2024	PAGE:Y2-1200-00
BRAKE AIR SYSTEM			

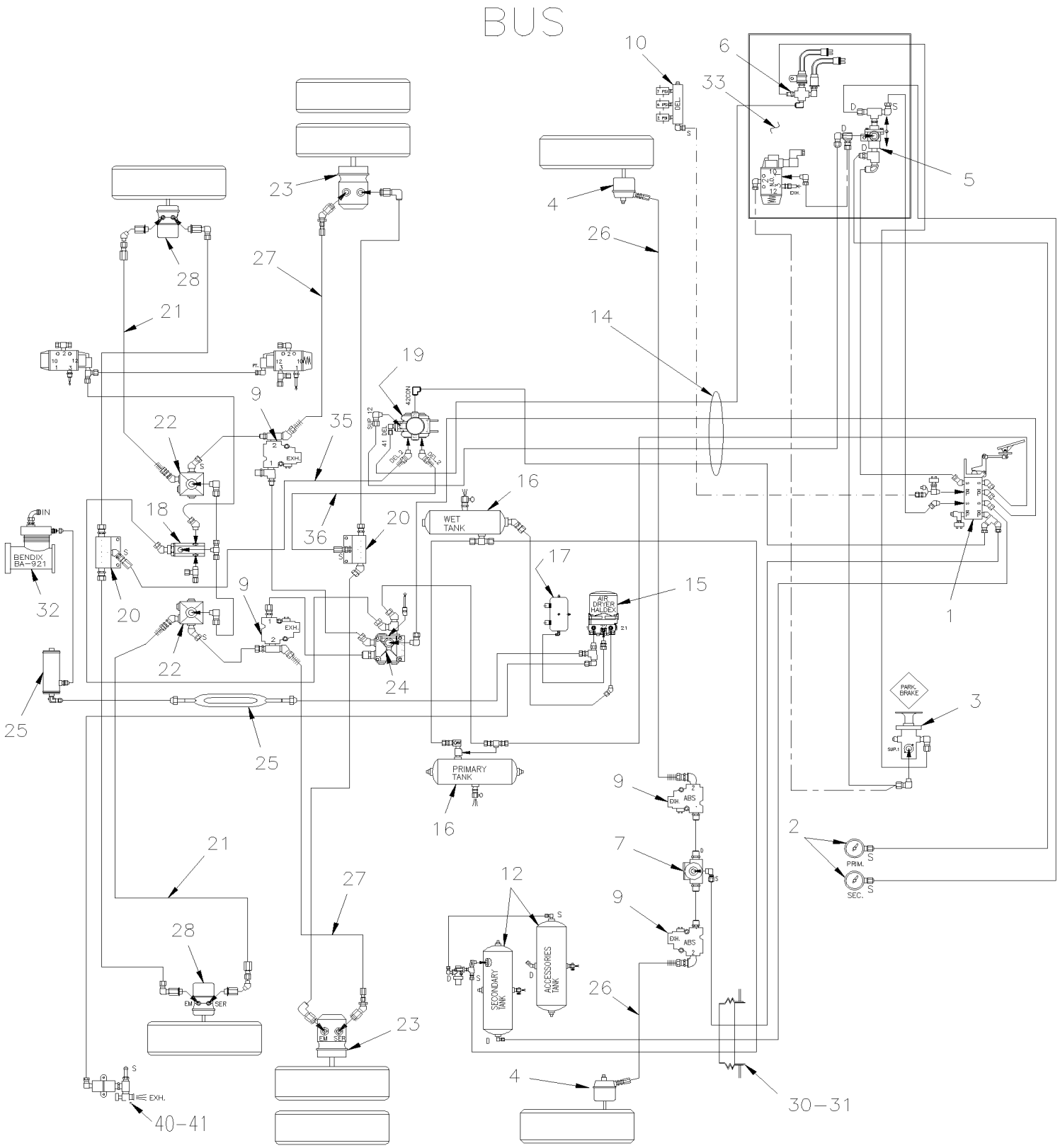

From Y-7462 To 6-8906		Date:07/2024	PAGE:Y2-1200-00
BRAKE AIR SYSTEM			

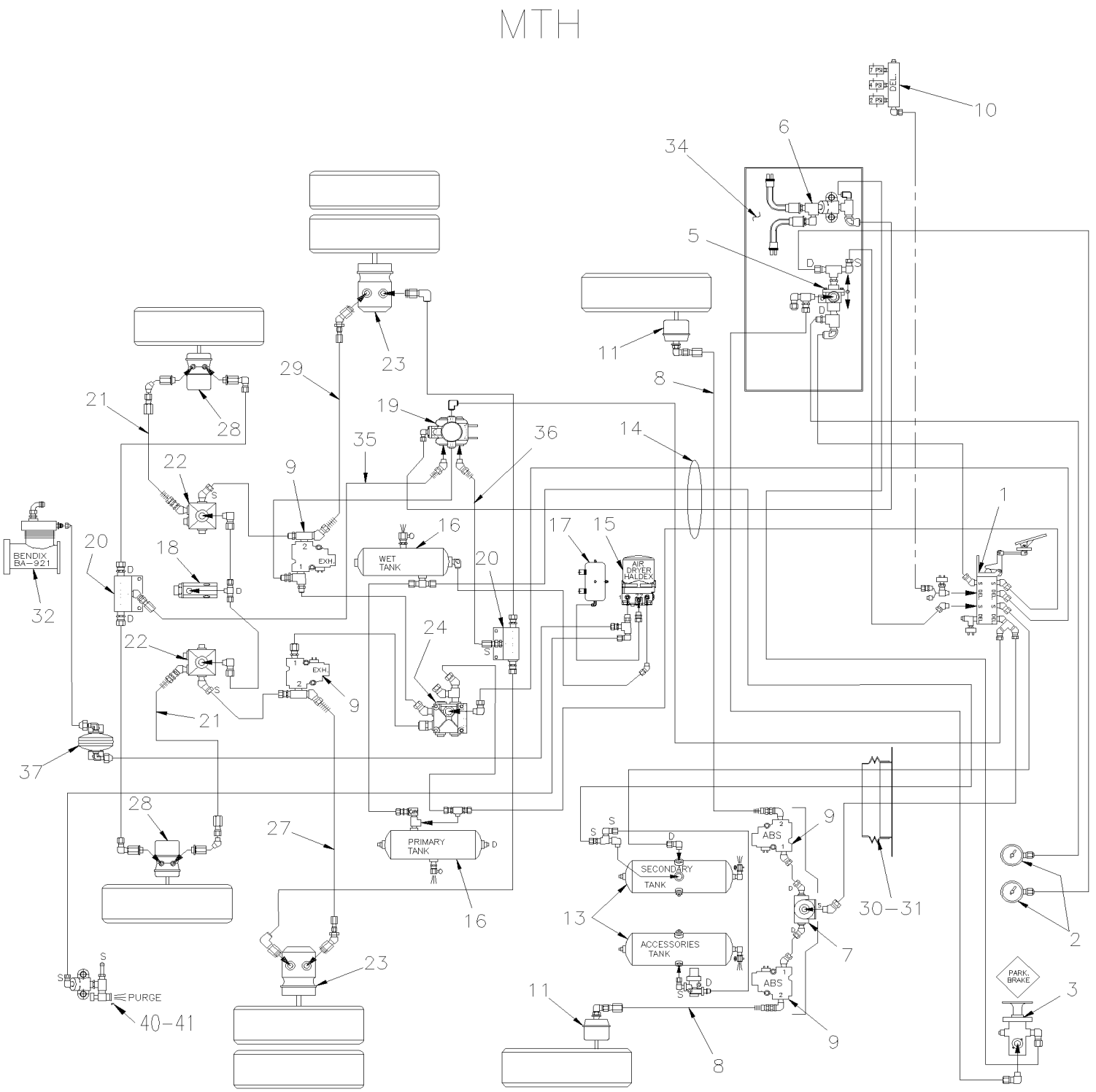

From Y-7462 To 6-8906		Date:07/2024	PAGE:Y2-1200-00

BRAKE AIR SYSTEM

Item#	Part	Description	XLII 45	XLII MTH40	XLII MTH45	XLII MTH45E	NOTES
1	**Y2-1220-10**	**BRAKE PEDAL VALVE - "BENDIX"**					
2	**Y2-0645-20**	**CENTER DASHBOARD PANEL**					
3	641128	VALVE, CONTROL VALVE PP-1 / 40PSI	1	1	1	1	
. NS	641154	. REPAIR KIT / PP-1 & RD-3	1	1	1	1	
4	**Y2-1225-10**	**BRAKE CHAMBER - FRONT AXLE TYPE 22**					
4	**Y2-1225-11**	**BRAKE CHAMBER - FRONT AXLE TYPE 24**					
4	**Y2-1225-12**	**BRAKE CHAMBER - FRONT AXLE TYPE 27**					
5	641564	VALVE, DOUBLE CHECK DC-4	1	1	1	1	
6	640870	VALVE / SPRING BRAKE SR-1 To 5-8358	1	1	1	1	
. NS	640921	. REPAIR KIT / SR-1 To 5-8358	1	1	1	1	
6	287234	PRESSURE SWITCH N.C. 30-10 20PS001AB030E010E From 5-8359	2	2	2	2	
7	641429	VALVE, QUICK RELEASE QR-1 / 3/8NPTx3/8NPTx3/8NPT	1	1	1	1	
. NS	640924	. REPAIR KIT / QR-1	1	1	1	1	
8	641903	HOSE BRAKE #8 1090MM (43")			2		
9	641951	VALVE, "ABS" 12VOLT	4	4	4	4	
10	**Y2-0750-01**	**AUTOMATIC TRANSMISSION - "WORLD" WITH DETROIT S-60**					
11	**Y2-1225-11**	**BRAKE CHAMBER - FRONT AXLE TYPE 24**					
11	**Y2-1225-12**	**BRAKE CHAMBER - FRONT AXLE TYPE 27**					
12	641583	AIR TANK / 1508 IN° / 9" 1/2 O.D. X 24"	2				
13	141834	AIR TANK / 1303 IN° / 8" O.D. X 27"1/2			2		
14	**Y2-1202-00**	**TUBES PLASTIC / AIR D.O.T.**					
15	**Y2-1215-10**	**AIR DRYER - "HALDEX" - INSTALLATION**					
16	140869	AIR TANK / 1791 IN° / 9 1/2" O.D. X 27"	2	2	2	2	
17	70307176	AIR TANK / 281 IN° / 6" O.D. X 12"	1	1	1	1	
18	640442	VALVE, INVERSION TR-2	1	1	1	1	
19	641120	VALVE, RELAY R-14 HORIZONTAL PORT To 5-8358	1	1	1	1	
. NS	10508267	. KIT, REPAIR To 5-8358	1	1	1	1	
19	642015	VALVE / SPRING BRAKE SR-7 From 5-8359	1	1	1	1	
19	643385	KIT CHECK VALVE CONVERSION SR-7	1	1	1	1	
19	643384	VALVE / SPRING BRAKE SR-7	1	1	1	1	
. NS	642119	. VALVE / SPRING BRAKE SR-7	1	1	1	1	
20	641136	ANCHOR TEE / PIPE FITTING / 3/8NPT-Fx3/8NPT-Fx3/8NPT-F ZP	2	2	2	2	
21	641903	HOSE BRAKE #8 1090MM (43")	2	2	2	2	
22	642067	VALVE, RELAY R-12 HORIZONTAL PORT	2	2	2	2	
23	**Y2-1235-10**	**BRAKE CHAMBER - DRIVE AXLE "KNORR-BREMSE"**					
24	642013	VALVE, RELAY R-12 DC To 5-8358	1	1	1	1	
24	641991	VALVE, RELAY R-14 "WABCO" From 5-8359	1	1	1	1	
25	**Y2-1215-12**	**AIR DRYER - INSTALLATION**					
26	641908	HOSE BRAKE #8 1300MM (51")	2				
27	641305	HOSE BRAKE #8 718MM (28 1/4")	1				
27	641305	HOSE BRAKE #8 718MM (28 1/4")			2		
28	**Y2-1245-10**	**BRAKE CHAMBER - TAG AXLE TYPE 16/16**					

From Y-7462 To 6-8906		Date:07/2024	PAGE:Y2-1200-00

BRAKE AIR SYSTEM

Item#	Part	Description	XLII 45	XLII MTH40	XLII MTH45	XLII MTH45E	NOTES
29	641302	HOSE BRAKE #8 610MM (24")	1				
30	504499	CUFF END BELLOW / 2 7/8" I.D. x 3 5/8" x 4 7/16	1	1	1	1	
31	141567	PROTECTOR RUBBER 100MM	1	1	1	1	
NS	509558	WEATHERSEAL SNAP-ON 1/8" / SINGLE LIP / WH / C.T.L.	AR	AR	AR	AR	
32	**Y2-1205-11**	**AIR COMPRESSOR - "BA921" - WITH DETROIT S-60**					
33	**Y2-1630-00**	**FRONT KNEELING - CONTROL PANEL To 2-7799**					
33	**Y2-1630-01**	**FRONT KNEELING - CONTROL PANEL From 2-7800 To 5-8558**					
33	**Y2-1630-02**	**FRONT KNEELING - CONTROL PANEL From 5-8559**					
34	**Y2-1640-50**	**LEVEL-LOW - CONTROL PANEL & VALVES To 2-7799**					
34	**Y2-1640-51**	**LEVEL-LOW - CONTROL PANEL & VALVES From 2-7800 To 5-8558**					
34	**Y2-1640-52**	**LEVEL-LOW - CONTROL PANEL & VALVES From 5-8559**					
35	641303	HOSE BRAKE #8 914MM (36") To 5-8358	1	1	1	1	
35	642020	HOSE BRAKE #8 914MM (36") From 5-8359	1	1	1	1	
36	641305	HOSE BRAKE #8 718MM (28 1/4") To 5-8358	1	1	1	1	
36	642019	HOSE BRAKE #8 718MM (28 1/4") From 5-8359	1	1	1	1	
37	032428	AIR TANK / 61 IN° / 6" O.D. X 4"			1		
40	640488	VALVE, AIR FILL 1/8" NPT	1	1	1	1	
. NS	650164	. CAP VALVE / CHROME	1	1	1	1	
41	5011129	NEEDLE VALVE 1/4 NPT M x 1/4 NPT F	1	1	1	1	

From Y-7462 To 6-8906		Date:07/2024	PAGE:Y2-0705-00
TRANSMISSION "ZF-ASTRONIC"			

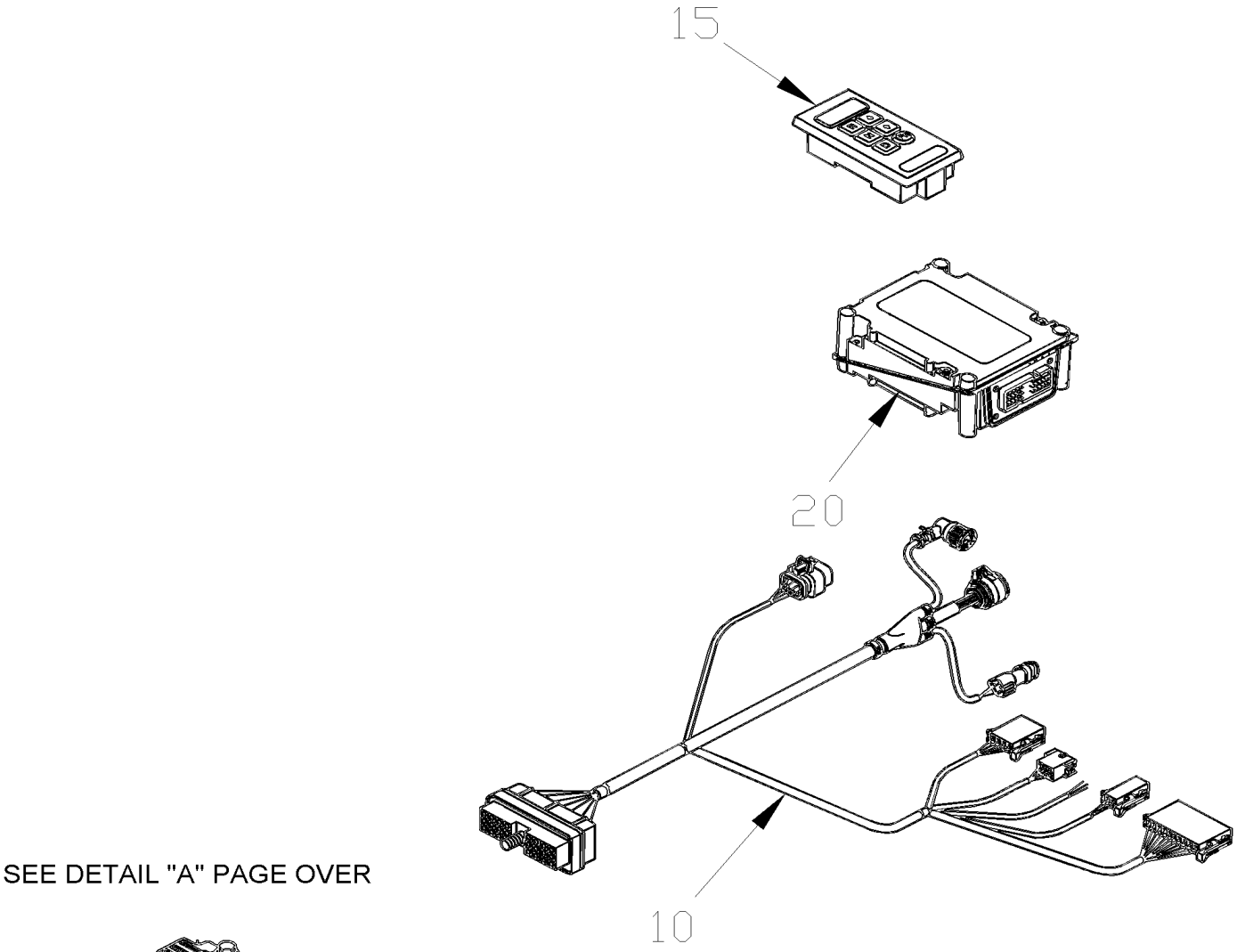

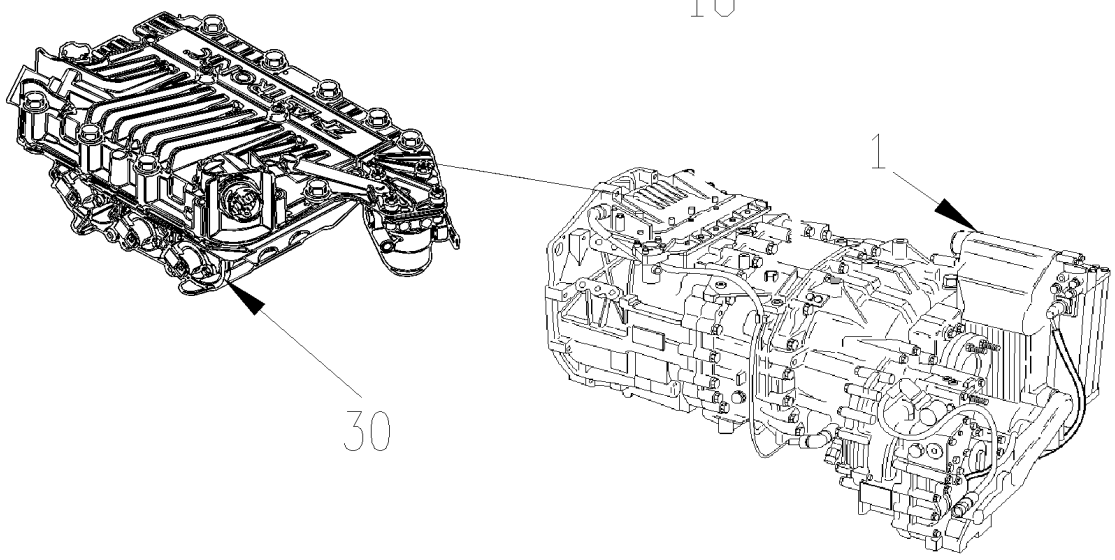

From Y-7462 To 6-8906		Date:07/2024	PAGE:Y2-0705-00
TRANSMISSION "ZF-ASTRONIC"			

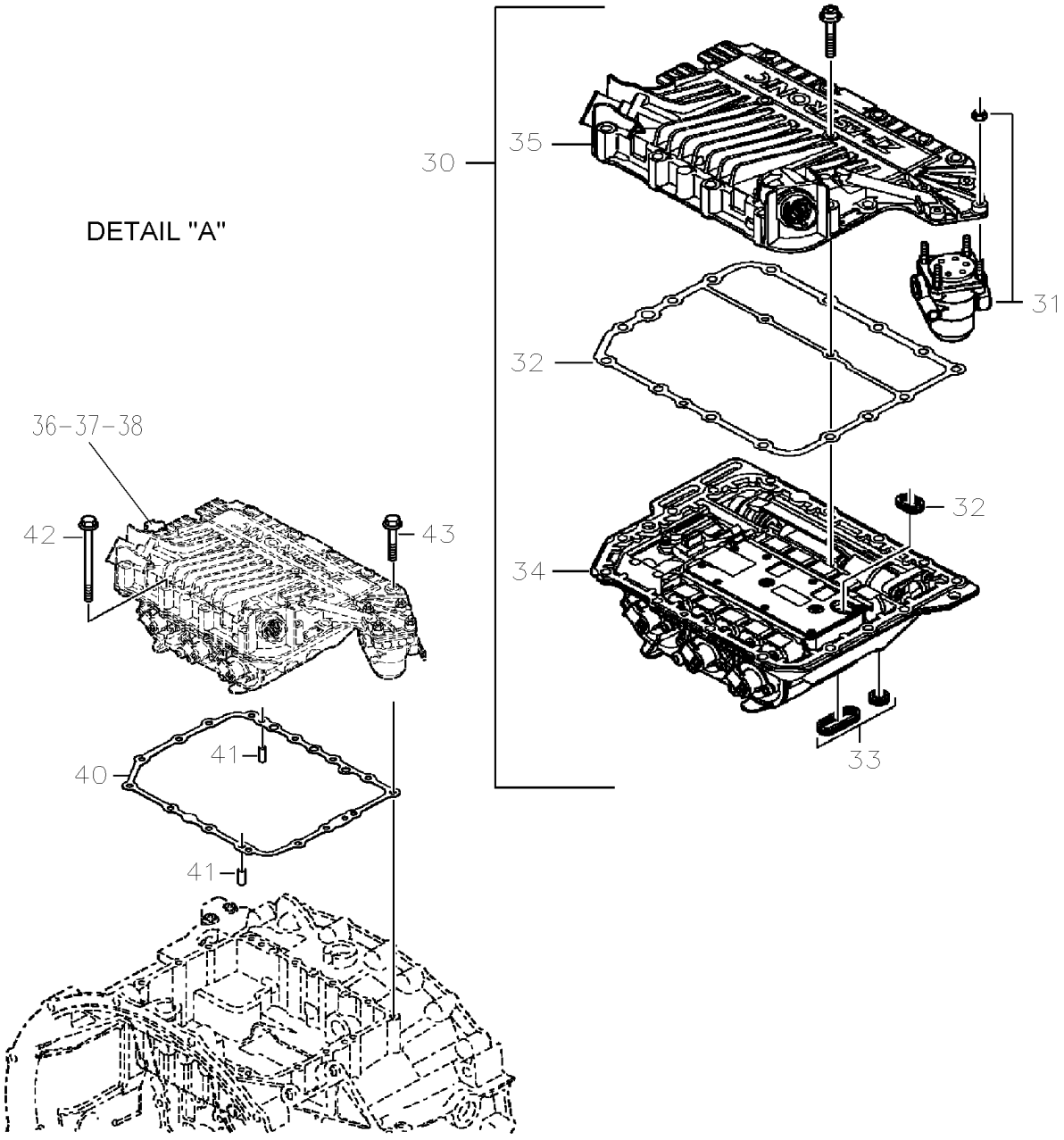

From Y-7462 To 6-8906		Date:07/2024	PAGE:Y2-0705-00

TRANSMISSION "ZF-ASTRONIC"

Item#	Part	Description	XLII 45	XLII MTH40	XLII MTH45	XLII MTH45E	NOTES
1	571772	TRANSMISSION "ZF" W/O INTARDER / W10 SPEEDS	1				
NS	684516	OIL TRANSYND TRANSMISSION "ZF" CASTROL / 75W/85 AP1 GL4 / (25 LITERS)	AR				
NS	684911	OIL TRANSYND TRANSMISSION "ZF" TOTAL EXON / 75W/80 AP1 GL4 / (20 LITERS)	AR				
10	572020	WIRING HARNESS ADAPTOR RETROFIT "XL SERIES" From 3-7962 To 3-7962	1				
10	065833	CABLE ASSY / ECU & TRANS CONTROL "ZF" To 6-8753	1				
10	066636	CABLE ASSY / FRT SELECTOR & RR "ZMTec" From 6-8754	1				
. NS	563340	. CONNECTOR / SEAL CIRC. 2.5 SERIES / SH 4C / AMP 1-967325-1 From 6-8754	1				
. NS	562877	. CONNECTOR / DT SERIES / PH 3C / GRAY / DEUTSCH DT04-3P-E008 From 6-8754	1				
15	571773	SHIFTER SELECTOR "ZF"	1				
20	571774	MODULE "ZF" ZMTEC / W10 SPEEDS	1				
30	572022	. TRANSMISSION ACTUATOR GS 3 / 10 speeds	1				
31	19504975	. PRESSURE REDUCER VALVE	1				
32	570003	. SEAL KIT	1				
33	Call order desk	. . SEAL KIT	1				P
34	N.S.P.	. BOTTOM ACTUATOR 6009.274.058	1				2
35	N.S.P.	. UPPER PART ACTUATOR 6009.397.074	1				2
36	572131	. BREATHER	1				
37	572132	. ELBOW 90°	1				
38	572133	. ADAPTOR	1				
40	572024	GASKET / TRANS ACTUATOR & HOUSING	1				
41	N.S.P.	CYLINDER PIN 0631.306.863	1				2
42	502797	SCREW CAP HEX M8-1.25x70 G10.9 G500	6				
43		SCREW CAP HEX M8-1.25x45 G10.9 DP	9				
44	N.S.P.	ANGLE PIECE 0501.315.796	1				2
		2) NOT SOLD BY PREVOST (SEE MANUFACTURING PART NUMBER AT END OF DESCRIPTION LINE)					
		P) CALL ORDER DESK FOR SPECIFIC APPLICATION (V.I.N.)					

From 4-8165 To 6-8906		Date:07/2024	PAGE:Y2-0705-05
GEARBOX HOUSING			

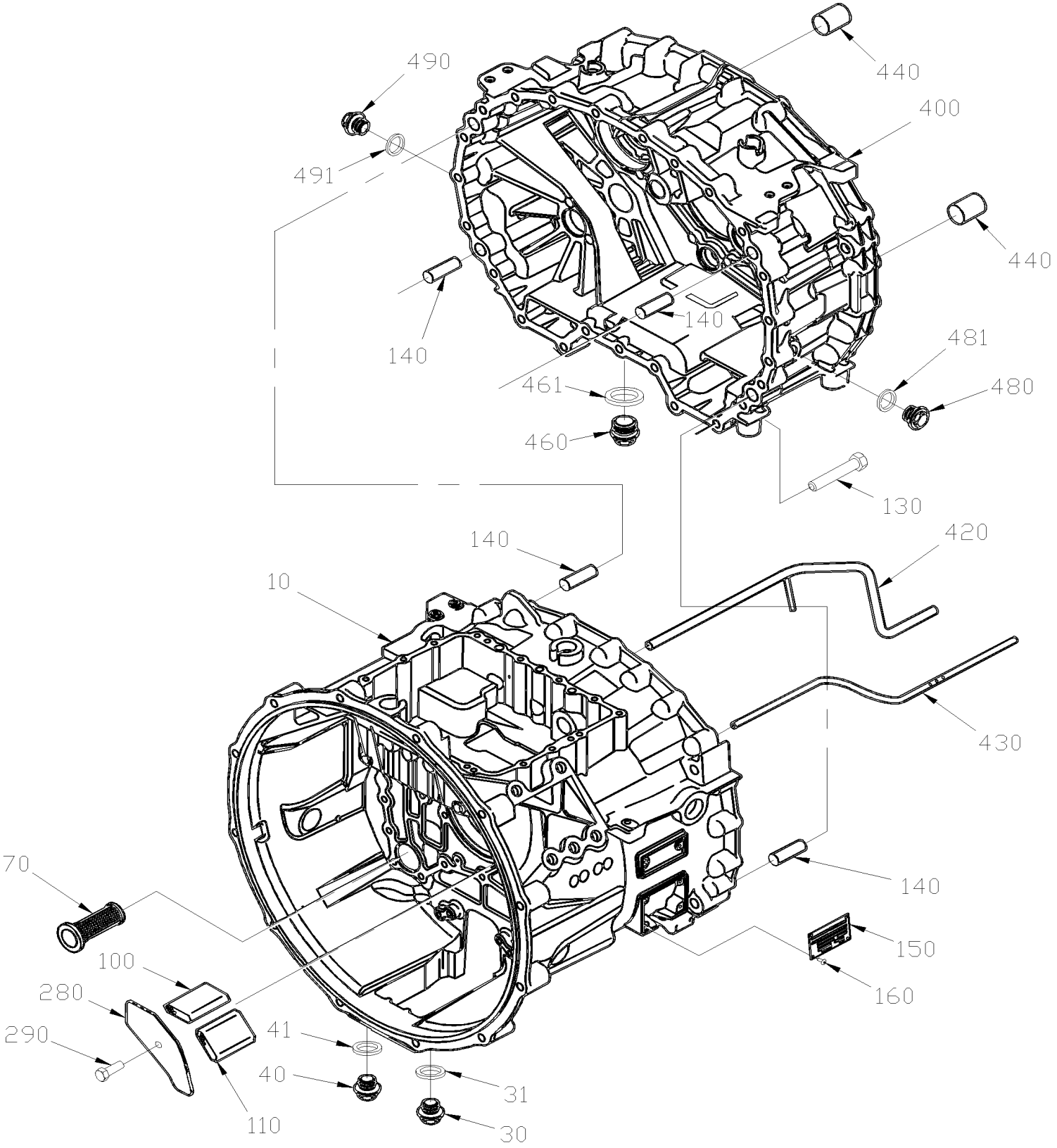

From 4-8165 To 6-8906		Date:07/2024	PAGE:Y2-0705-05

GEARBOX HOUSING

Item#	Part	Description	XLII 45	XLII MTH40	XLII MTH45	XLII MTH45E	NOTES
10	571787	HOUSING	1				
30	571788	SCREW PLUG M22x1.5 DIN 908	1				
31	571789	SEALING RING	1				
40	571788	SCREW PLUG M22x1.5 DIN 908	1				
41	571789	SEALING RING	1				
70	571790	SCREEN INSERT	1				
100	571791	BREATHER	1				
110	571791	BREATHER	1				
130	571792	SCREW CAP HEX M101.5x60 G10.9	24				
140	571793	CYLINDRICAL PIN	4				
150	571794	TYPE PLATE	1				
160	571795	BLIND RIVET	4				
280	571796	COVER	1				
290	502790	SCREW CAP HEX M8-1.25x20 G8.8 Z050	1				
400	571797	HOUSING	1				
420	571798	SPRAY TUBE	1				
430	571799	SPRAY TUBE	1				
440	571800	PIN	2				
460	571801	SCREW PLUG	1				
461	571802	SEALING RING	1				
480	571803	SCREW PLUG M24x1.5 DIN 910	1				
481	571802	SEALING RING	1				
490	571803	SCREW PLUG M24x1.5 DIN 910	1				
491	571802	SEALING RING	1				
NS	684516	OIL TRANSYND TRANSMISSION "ZF" CASTROL / 75W/85 AP1 GL4 / (25 LITERS)	AR				
NS	684911	OIL TRANSYND TRANSMISSION "ZF" TOTAL EXON / 75W/80 AP1 GL4 / (20 LITERS)	AR				

From 4-8165 To 6-8906		Date:07/2024	PAGE:Y2-0705-10
INPUT SHAFT			

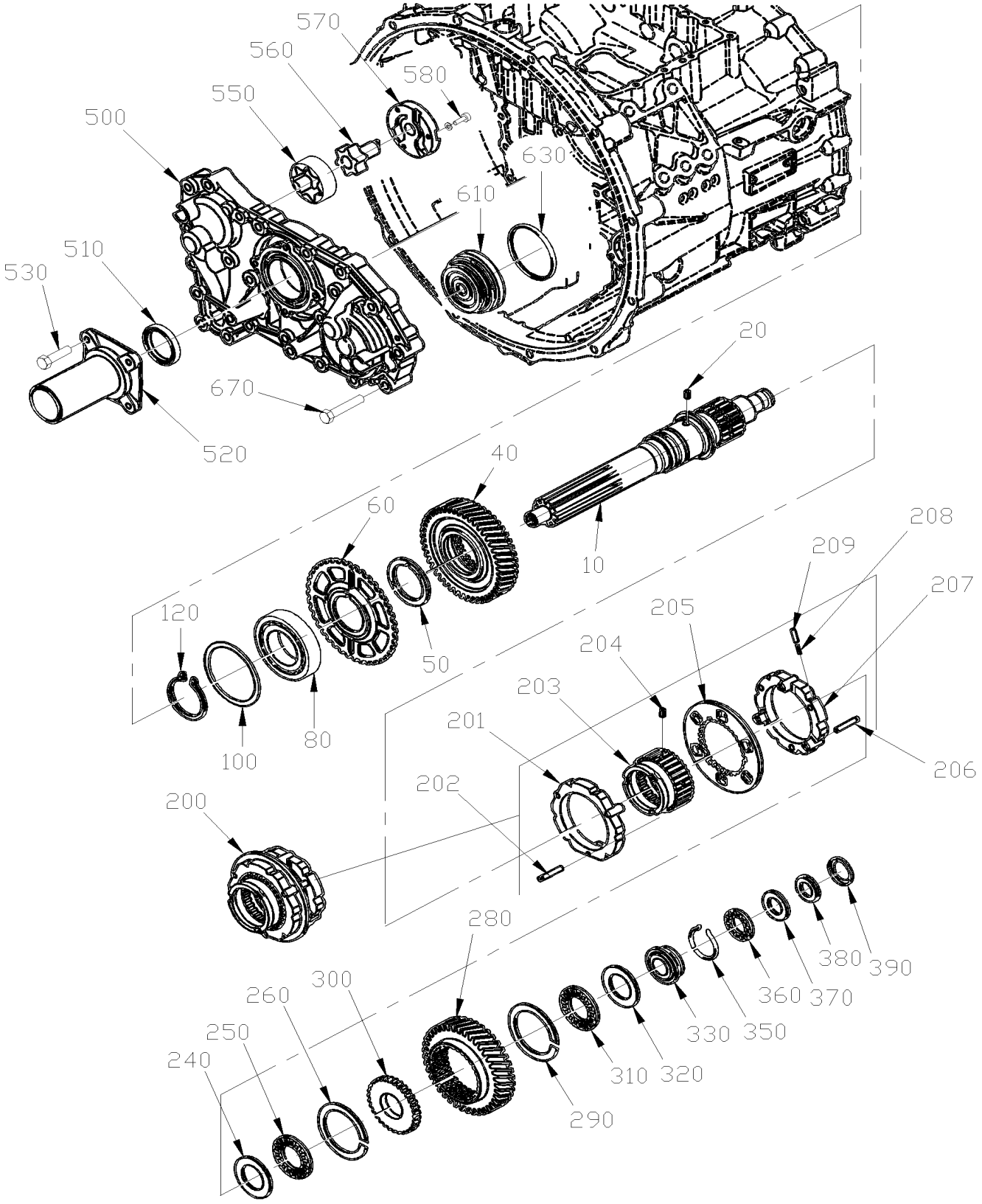

From 4-8165 To 6-8906		Date:07/2024	PAGE:Y2-0705-10

INPUT SHAFT

Item#	Part	Description	XLII 45	XLII MTH40	XLII MTH45	XLII MTH45E	NOTES
10	571804	INPUT SHAFT	1				
20	571805	PIN	1				
40	571806	HELICAL GEAR	1				
50	571807	THRUST WASHER	1				
60	571808	COUNTING RING	1				
80	571809	BALL BEARING	1				
100	571810	SHIM 1.40MM	AR				
100	571811	SHIM 1.45MM	AR				
100	571812	SHIM 1.50MM	AR				
100	571813	SHIM 1.55MM	AR				
100	571814	SHIM 1.60MM	AR				
100	571815	SHIM 1.65MM	AR				
100	571816	SHIM 1.70MM	AR				
100	571817	SHIM 1.75MM	AR				
100	571818	SHIM 1.80MM	AR				
100	571819	SHIM 1.85MM	AR				
100	571820	SHIM 1.90MM	AR				
100	571821	SHIM 1.95MM	AR				
100	571822	SHIM 2.00MM	AR				
120	571823	RETAINING RING 3.25MM	AR				
120	571824	RETAINING RING 3.30MM	AR				
120	571825	RETAINING RING 3.35MM	AR				
120	571826	RETAINING RING 3.40MM	AR				
120	571827	RETAINING RING 3.45MM	AR				
120	571828	RETAINING RING 3.50MM	AR				
120	571829	RETAINING RING 3.55MM	AR				
120	571830	RETAINING RING 3.60MM	AR				
120	571831	RETAINING RING 3.65MM	AR				
120	571832	RETAINING RING 3.70MM	AR				
120	571833	RETAINING RING 3.75MM	AR				
120	571834	RETAINING RING 3.80MM	AR				
120	571835	RETAINING RING 3.85MM	AR				
120	571836	RETAINING RING 3.90MM	AR				
120	571837	RETAINING RING 3.95MM	AR				
120	571838	RETAINING RING 4.00MM	AR				
200	571839	SYCHRONIZER ASSY	1				
201	571840	. SYCHRONIZER RING	1				
202	571841	. PIN	3				
203	571842	. GEAR SHIFT SLEEVE	1				
204	571805	. PIN	1				
205	571843	. PLATE	1				
206	571844	. PIN	3				

From 4-8165 To 6-8906		Date:07/2024	PAGE:Y2-0705-10

INPUT SHAFT

Item#	Part	Description	XLII 45	XLII MTH40	XLII MTH45	XLII MTH45E	NOTES
207	571845	. SYCHRONIZER RING	1				
208	571846	. COMPRESSION SPRING	3				
209	571847	. CYLINDER ROLLER 7X10 DIN 5402	3				
240	571848	WASHER	1				
250	571849	AXLE NEEDLE CAGE	1				
260	571850	SNAP RING	1				
280	571851	HELICAL GEAR	1				
290	571850	SNAP RING	1				
300	571852	BEARING DISC	1				
310	571849	AXLE NEEDLE CAGE	1				
320	571848	WASHER	1				
330	571853	BEARING RING	1				
350	571854	RETAINING RING	1				
360	571855	AXLE ROLLER CAGE	1				
370	571856	WASHER / 5MM	1				
380	571857	SPLIT RING	1				
390	571858	RETAINING RING	1				
500	571859	CONNECTING PLATE	1				
510	571860	SHAFT SEAL	1				
520	571861	RELEASE FLANGE	1				
530	502589	SCREW CAP HEX M8-1.25x25 G8.8 Z050	4				
550	571862	ROTOR	1				
560	571863	PUMP SHAFT	1				
570	571864	PUMP COVER	1				
580	571865	SCREW CAP HEXS TORX M6-1.0x25	3				
610	571866	PISTON	1				
630	571867	U-RING	1				
670	571868	SCREW CAP HEX M10-1.5x60 G10.9	22				

From 4-8165 To 6-8906		Date:07/2024	PAGE:Y2-0705-15
LAYSHAFT			

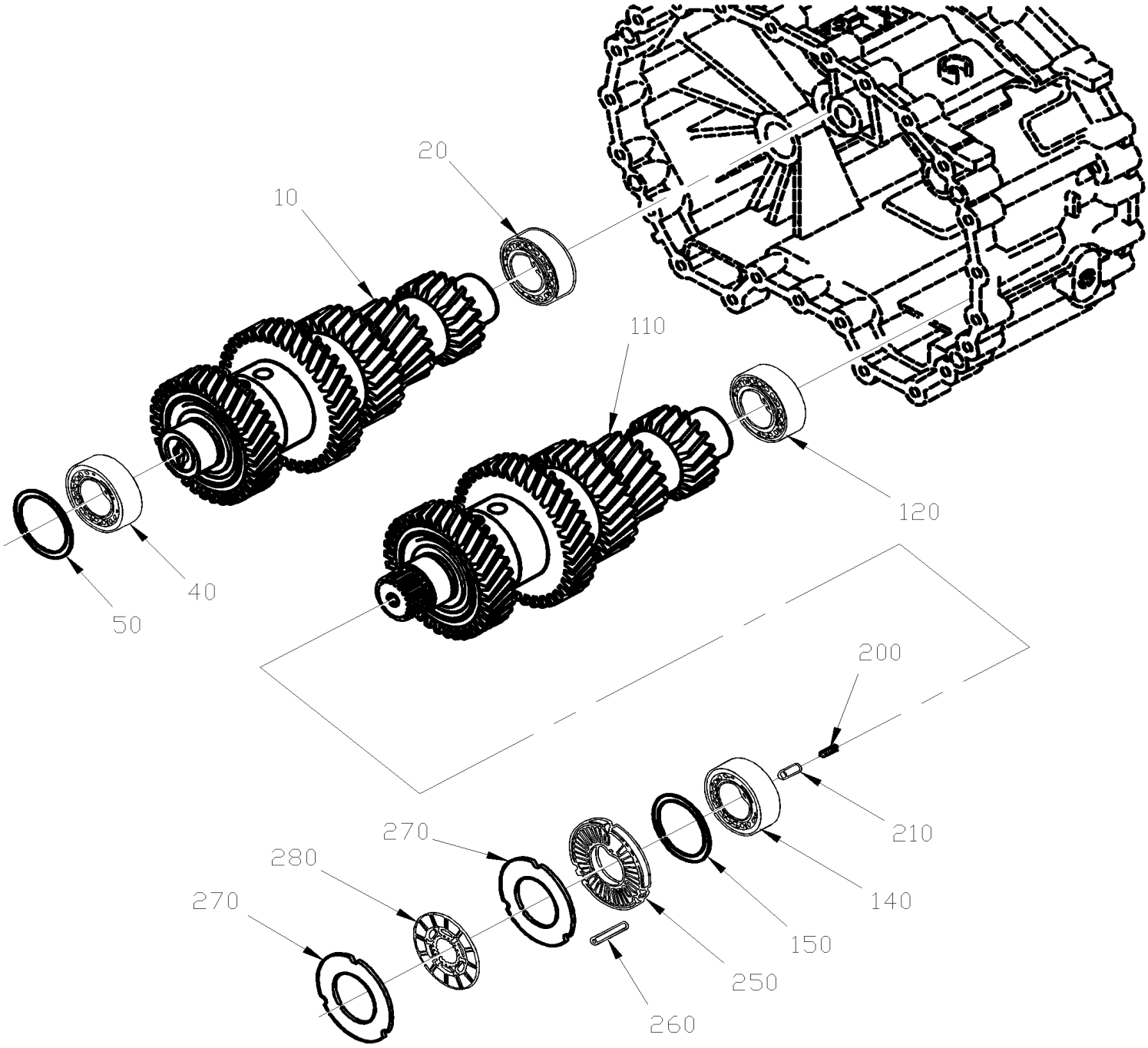

From 4-8165 To 6-8906		Date:07/2024	PAGE:Y2-0705-15

LAYSHAFT

Item#	Part	Description	XLII 45	XLII MTH40	XLII MTH45	XLII MTH45E	NOTES
10	571869	LAYSHAFT	1				
20	571870	ROLLER BEARING	1				
40	571870	ROLLER BEARING	1				
50	571871	SHIM 1.70MM	AR				
50	571872	SHIM 1.75MM	AR				
50	571873	SHIM 1.80MM	AR				
50	571874	SHIM 1.85MM	AR				
50	571875	SHIM 1.90MM	AR				
50	571876	SHIM 1.95MM	AR				
50	571877	SHIM 2.00MM	AR				
50	571878	SHIM 2.05MM	AR				
50	571879	SHIM 2.10MM	AR				
50	571880	SHIM 2.15MM	AR				
50	571881	SHIM 2.20MM	AR				
50	571882	SHIM 2.25MM	AR				
50	571883	SHIM 2.30MM	AR				
50	571884	SHIM 2.35MM	AR				
50	571885	SHIM 2.40MM	AR				
50	571886	SHIM 2.45MM	AR				
50	571887	SHIM 2.50MM	AR				
50	571888	SHIM 2.55MM	AR				
50	571889	SHIM 2.60MM	AR				
50	571890	SHIM 2.65MM	AR				
50	571891	SHIM 2.70MM	AR				
50	571892	SHIM 2.75MM	AR				
50	571893	SHIM 2.80MM	AR				
110	571894	LAYSHAFT	1				
120	571870	ROLLER BEARING	1				
140	571870	ROLLER BEARING	1				
150	571871	SHIM 1.70MM	AR				
150	571872	SHIM 1.75MM	AR				
150	571873	SHIM 1.80MM	AR				
150	571874	SHIM 1.85MM	AR				
150	571875	SHIM 1.90MM	AR				
150	571876	SHIM 1.95MM	AR				
150	571877	SHIM 2.00MM	AR				
150	571878	SHIM 2.05MM	AR				
150	571879	SHIM 2.10MM	AR				
150	571880	SHIM 2.15MM	AR				
150	571881	SHIM 2.20MM	AR				
150	571882	SHIM 2.25MM	AR				
150	571883	SHIM 2.30MM	AR				

From 4-8165 To 6-8906		Date:07/2024	PAGE:Y2-0705-15

LAYSHAFT

Item#	Part	Description	XLII 45	XLII MTH40	XLII MTH45	XLII MTH45E	NOTES
150	571884	SHIM 2.35MM	AR				
150	571885	SHIM 2.40MM	AR				
150	571886	SHIM 2.45MM	AR				
150	571887	SHIM 2.50MM	AR				
150	571888	SHIM 2.55MM	AR				
150	571889	SHIM 2.60MM	AR				
150	571890	SHIM 2.65MM	AR				
150	571891	SHIM 2.70MM	AR				
150	571892	SHIM 2.75MM	AR				
150	571893	SHIM 2.80MM	AR				
200	571895	COMPRESSION SPRING	1				
210	571896	DETENT PIN	1				
250	571897	BRAKE COVER	1				
260	571898	CYLINDRICAL PIN M6x50	3				
270	571899	OUT CLUTCH DISC	4				
280	571900	LINNIG CLUTCH DISC	2				

From 4-8165 To 6-8906		Date:07/2024	PAGE:Y2-0705-20
MAIN SHAFT			

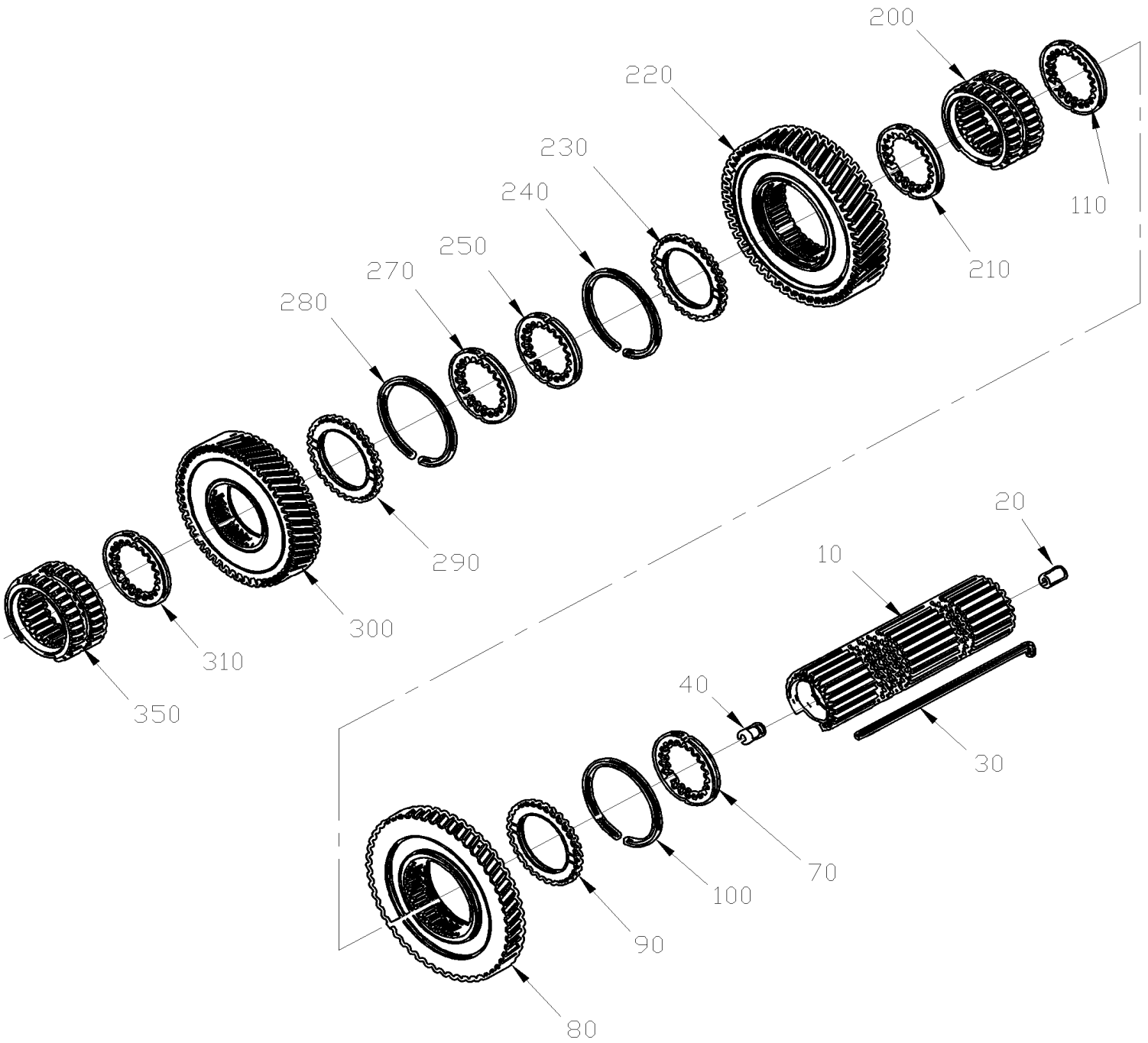

From 4-8165 To 6-8906		Date:07/2024	PAGE:Y2-0705-20

MAIN SHAFT

Item#	Part	Description	XLII 45	XLII MTH40	XLII MTH45	XLII MTH45E	NOTES
10	571901	MAIN SHAFT	1				
20	571902	OIL TUBE	1				
30	571903	KEY	1				
40	571904	OIL TUBE	1				
70	571905	WASHER	1				
80	571906	HELICAL GEAR	1				
90	571907	WASHER	1				
100	571850	SNAP RING	1				
110	571905	WASHER	1				
200	571908	SLIDING SLEEVE	1				
210	571905	WASHER	1				
220	571909	HELICAL GEAR	1				
230	571907	WASHER	1				
240	571850	SNAP RING	1				
250	571905	WASHER	1				
270	571905	WASHER	1				
280	571850	SNAP RING	1				
290	571907	WASHER	1				
300	571910	HELICAL GEAR	1				
310	571905	WASHER	1				
350	571908	SLIDING SLEEVE	1				

From 4-8165 To 6-8906		Date:07/2024	PAGE:Y2-0705-25
REVERSE GEAR			

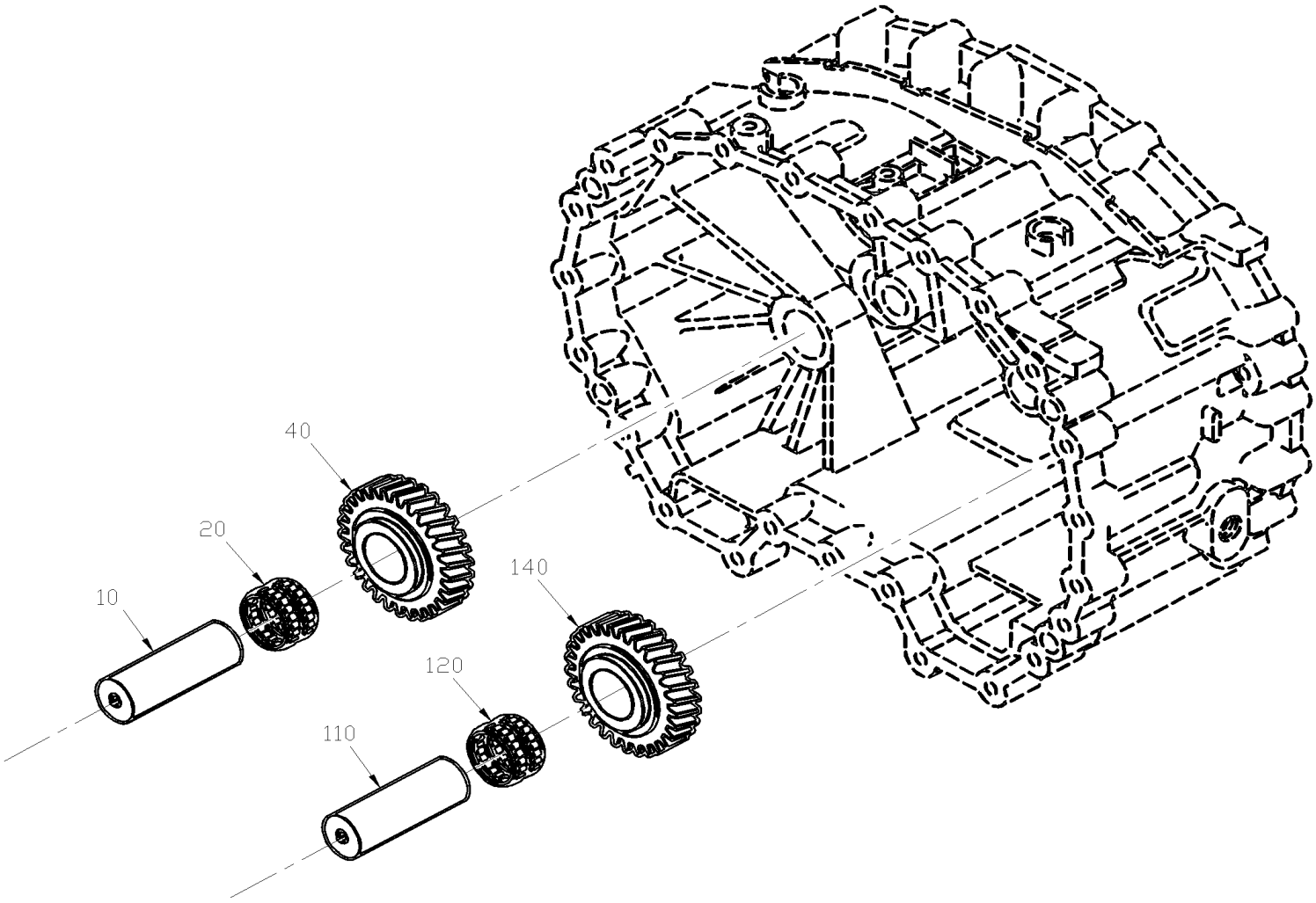

From 4-8165 To 6-8906		Date:07/2024	PAGE:Y2-0705-25

REVERSE GEAR

Item#	Part	Description	XLII 45	XLII MTH40	XLII MTH45	XLII MTH45E	NOTES
10	571911	REVERSE IDLER SHAFT	1				
20	571912	NEEDLE CAGE	1				
40	571913	HELICAL GEAR	1				
110	571911	REVERSE IDLER SHAFT	1				
120	571912	NEEDLE CAGE	1				
140	571913	HELICAL GEAR	1				

From 4-8165 To 6-8906		Date:07/2024	PAGE:Y2-0705-30
GEAR SHIFT SYSTEM			

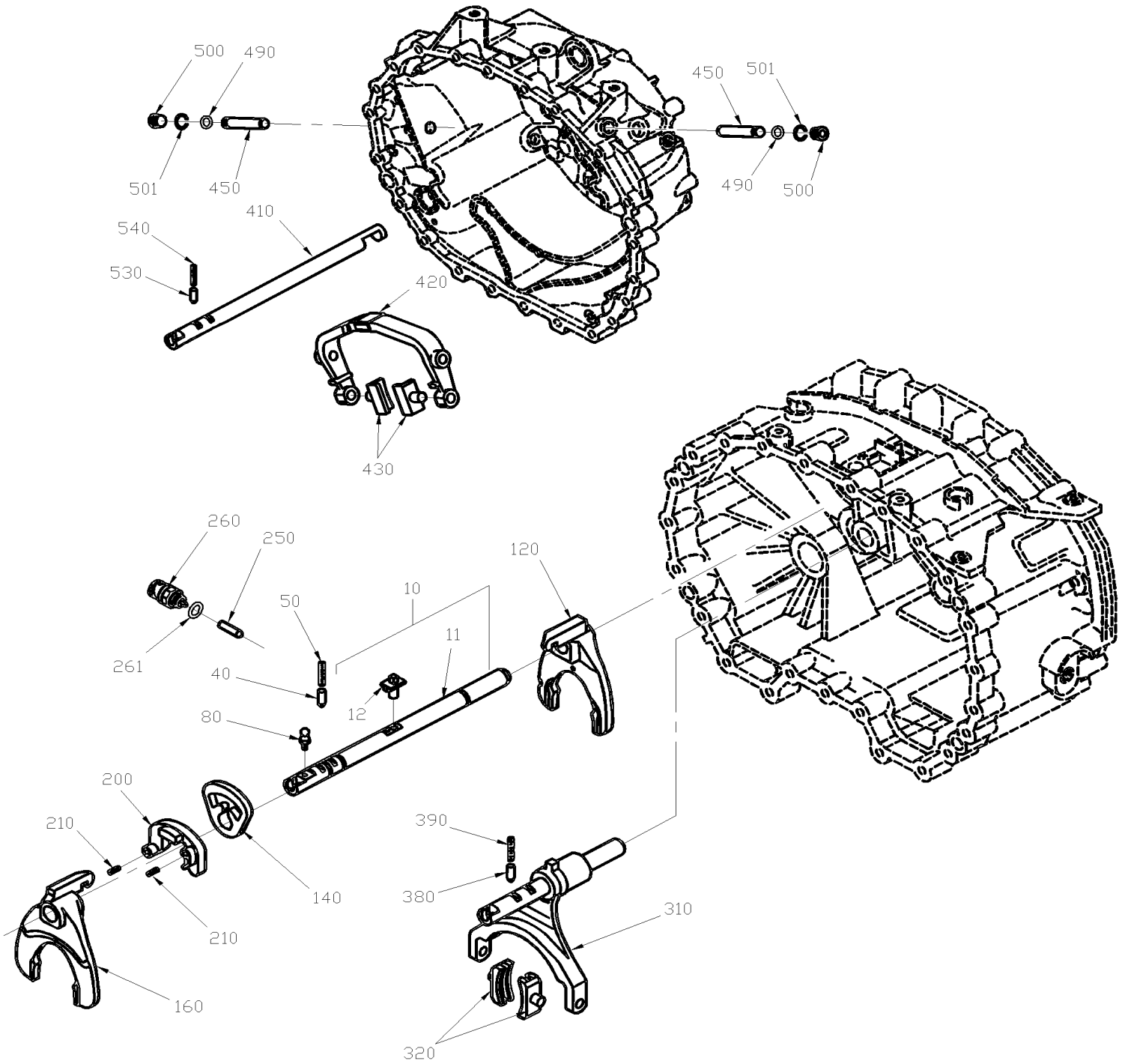

From 4-8165 To 6-8906		Date:07/2024	PAGE:Y2-0705-30

GEAR SHIFT SYSTEM

Item#	Part	Description	XLII 45	XLII MTH40	XLII MTH45	XLII MTH45E	NOTES
10	571914	GEAR SHIFT SHAFT ASSY	1				
11	571915	. GEAR SHIFT SHAFT	1				
12	571916	. GEAR SHIFT FINGER	1				
40	571896	DETENT PIN	1				
50	571895	COMPRESSION SPRING	1				
80	571917	BALL PIN	1				
120	571918	GEAR SHIFT FORK	1				
140	571919	INERTLOCK	1				
160	571920	GEAR SHIFT FORK	1				
200	571921	SPACER	1				
210	571922	SLOT PIN 6x18MM	2				
250	571923	PIN	1				
260	571925	SWITCH / NEUTRAL N.O. / W/"ZF"MANUAL TRANS	1				
261	571924	SEALING RING	1				
310	571926	GEAR SHIFT FORK	1				
320	571927	SLIDING PAD	2				
380	571896	DETENT PIN	1				
390	571895	COMPRESSION SPRING	1				
410	571998	GEAR SHIFT RAIL	1				
420	571999	GEAR SHIFT FORK	1				
430	572000	SLIDING PAD	2				
450	572001	JOINT PIN	2				
490	572002	SNAP RING	2				
500	572003	SCREW PLUG M20x1.5 DIN 908	2				
501	572004	SEALING RING	2				
530	571896	DETENT PIN	1				
540	571895	COMPRESSION SPRING	1				

From 4-8165 To 6-8906		Date:07/2024	PAGE:Y2-0705-35
OUTPUT HOUSING			

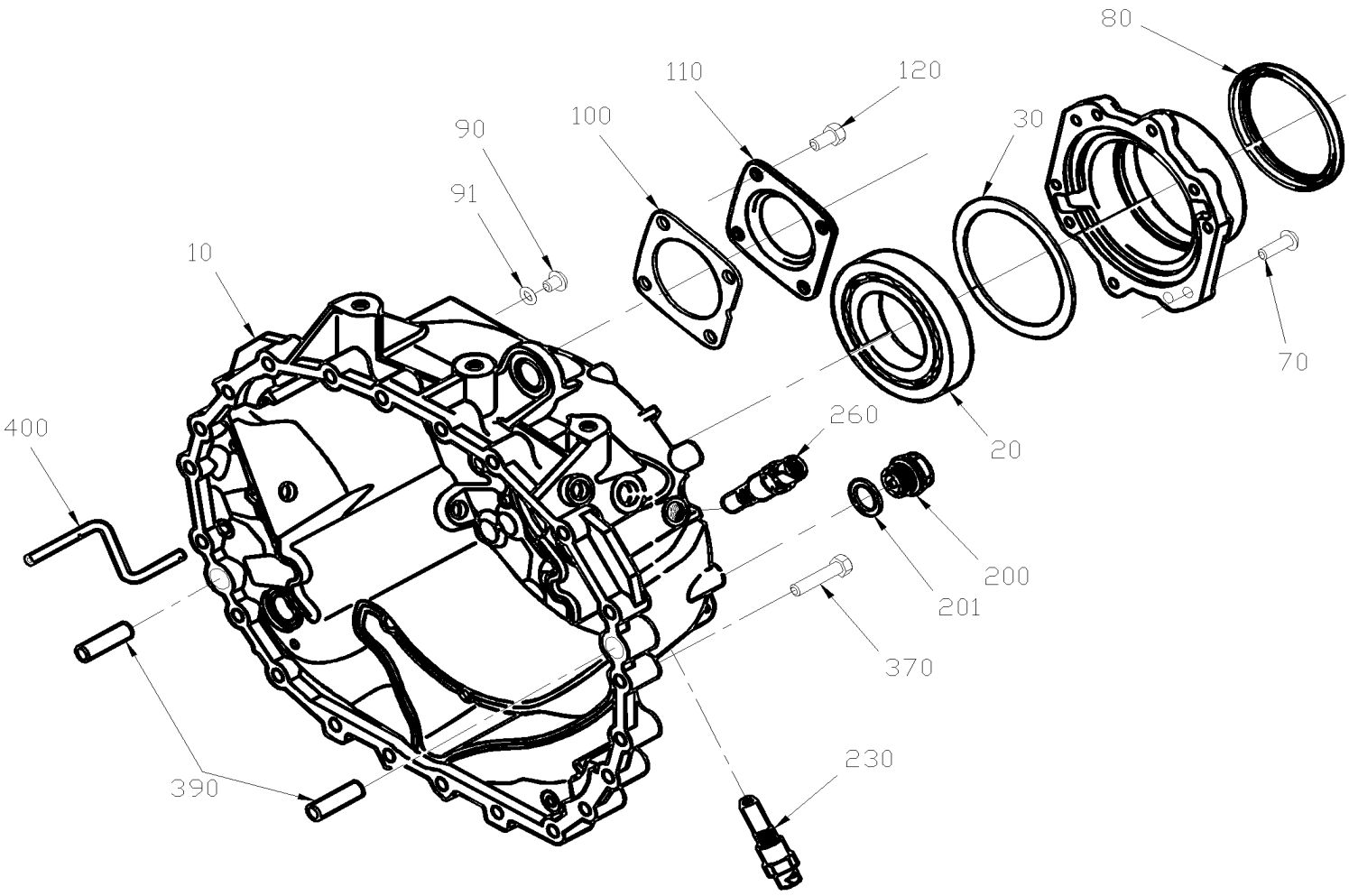

From 4-8165 To 6-8906		Date:07/2024	PAGE:Y2-0705-35

OUTPUT HOUSING

Item#	Part	Description	XLII 45	XLII MTH40	XLII MTH45	XLII MTH45E	NOTES
10	571928	HOUSING	1				
20	571929	BALL BEARING	1				
30	571930	SHIM 0.20MM	AR				
30	571931	SHIM 0.30MM	AR				
30	571932	SHIM 0.40MM	AR				
30	571933	SHIM 0.50MM	AR				
30	571934	SHIM 0.60MM	AR				
50	571935	COVER	1				
70	500829	SCREW CAP HEX M10-1.5x40 G8.8	10				
80	571936	SHAFT SEAL	1				
90	571937	SCREW PLUG M10x1.0 DIN 908	1				
91	571938	SEALING RING	1				
100	571939	GASKET	1				
110	571940	COVER	1				
120	500850	SCREW CAP HEX M12-1.75X25 G8.8 Z050	4				
200	571801	SCREW PLUG	1				
201	571802	SEALING RING	1				
230	571941	PULSE SENSOR	1				
260	571941	PULSE SENSOR	1				
370	571792	SCREW CAP HEX M101.5x60 G10.9	22				
390	571793	CYLINDRICAL PIN	2				
400	571942	SPRAY TUBE	1				

From 4-8165 To 6-8906		Date:07/2024	PAGE:Y2-0705-40
OUTPUT FLANGE & PLANETARY DRIVE			

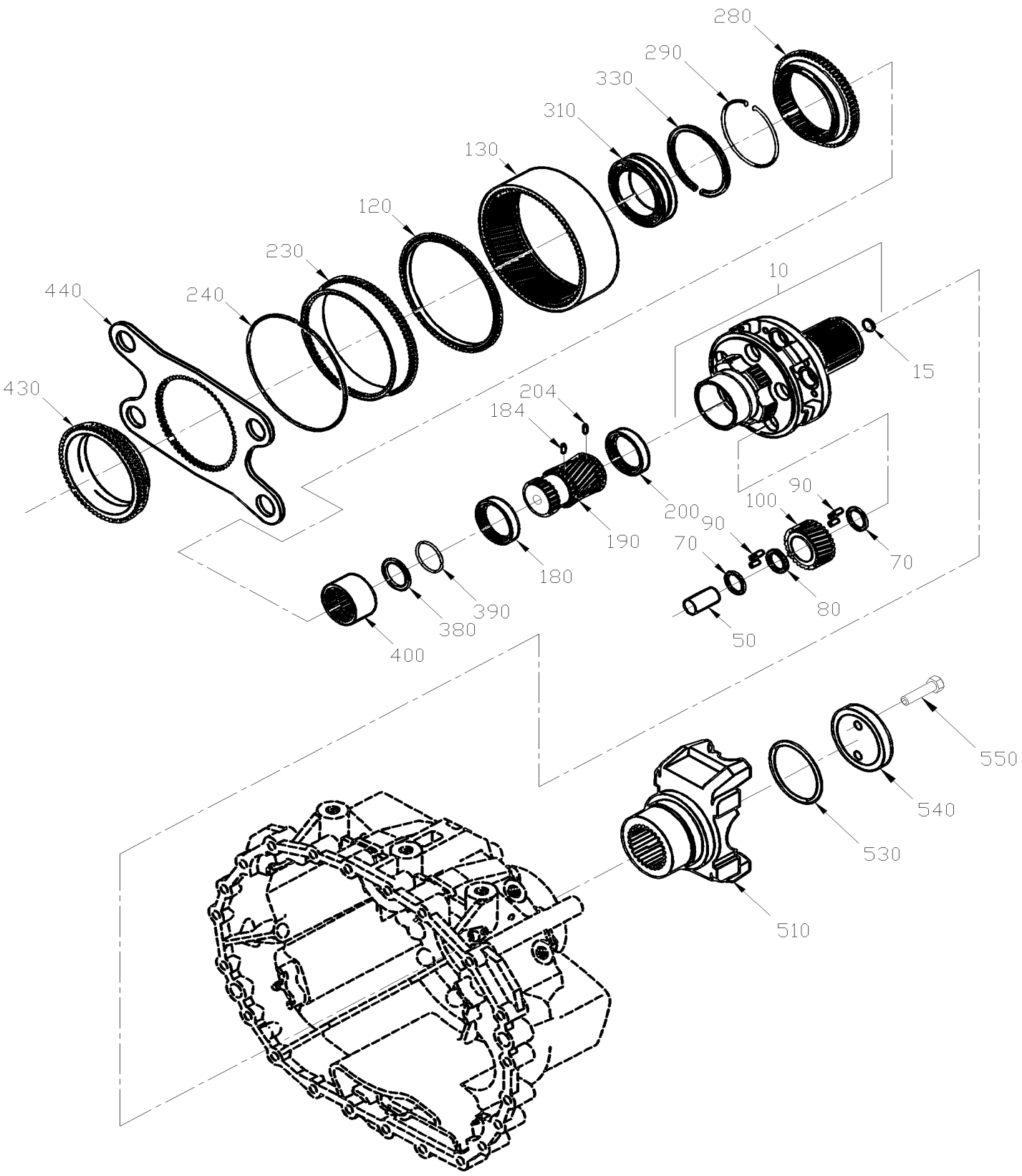

From 4-8165 To 6-8906		Date:07/2024	PAGE:Y2-0705-40

OUTPUT FLANGE & PLANETARY DRIVE

Item#	Part	Description	XLII 45	XLII MTH40	XLII MTH45	XLII MTH45E	NOTES
10	571943	PLANET CARRIER	1				
15	571944	. SEALING CAP	1				
50	571945	PLANET SHAFT	5				
70	571946	WASHER	10				
80	571947	WASHER	5				
90	571948	ROLLER	140				
100	571949	PLANET GEAR SET	1				
120	571950	THRUST RING	1				
130	571951	RING GEAR	1				
180	571952	PRESSURE DISC	1				
184	571953	DRIVING PIN	1				
190	571954	SUN GEAR	1				
200	571952	PRESSURE DISC	1				
204	571953	DRIVING PIN	1				
230	571955	RING GEAR CARRIER	1				
240	571956	LOCKING WIRE	1				
280	571957	CLUTCH BODY	1				
290	571958	RETAINING RING	1				
310	571959	CYLINDRICAL ROLLER BEARING	1				
330	571960	SNAP RING	1				
380	571961	SHIM 1.00MM	AR				
380	571962	SHIM 1.10MM	AR				
380	571963	SHIM 1.20MM	AR				
380	571964	SHIM 1.30MM	AR				
380	571965	SHIM 1.40MM	AR				
380	571966	SHIM 1.50MM	AR				
380	571967	SHIM 1.60MM	AR				
380	571968	SHIM 1.70MM	AR				
380	571969	SHIM 1.80MM	AR				
380	571970	SHIM 1.90MM	AR				
380	571971	SHIM 2.00MM	AR				
380	571972	SHIM 2.10MM	AR				
380	571973	SHIM 2.20MM	AR				
380	571974	SHIM 2.30MM	AR				
380	571975	SHIM 2.40MM	AR				
380	571976	SHIM 2.50MM	AR				
380	571977	SHIM 2.60MM	AR				
380	571978	SHIM 2.70MM	AR				
380	571979	SHIM 2.80MM	AR				
380	571980	SHIM 2.90MM	AR				
380	571981	SHIM 3.00MM	AR				
380	571982	SHIM 3.10MM	AR				

From 4-8165 To 6-8906		Date:07/2024	PAGE:Y2-0705-40

OUTPUT FLANGE & PLANETARY DRIVE

Item#	Part	Description	XLII 45	XLII MTH40	XLII MTH45	XLII MTH45E	NOTES
380	571983	SHIM 3.20MM	AR				
380	571984	SHIM 3.30MM	AR				
390	571985	RETAINING RING	1				
400	571986	SLEEVE	1				
430	571987	CLUTCH BODY	1				
440	571988	PLATE	1				
510	571989	YOKE (1810) HALF ROUND / "ZF" TRANS	1				
530	571990	O-RING	1				
540	571991	WASHER	1				
550	571992	SCREW CAP HEX M10-1.5x60 G10.9	2				

From 4-8165 To 6-8906		Date:07/2024	PAGE:Y2-0705-45
SYNCHRONIZER ASSY			

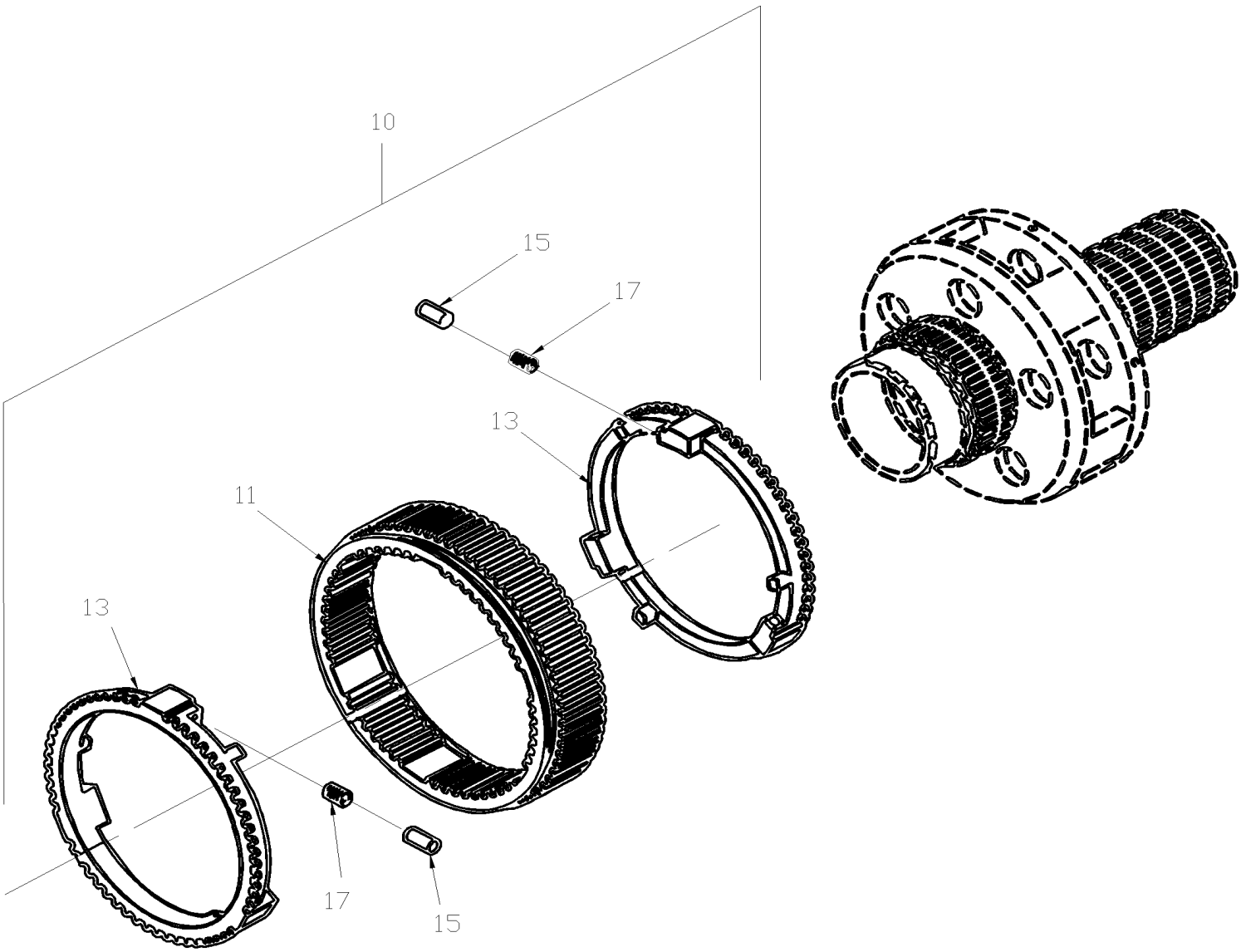

From 4-8165 To 6-8906		Date:07/2024	PAGE:Y2-0705-45

SYNCHRONIZER ASSY

Item#	Part	Description	XLII 45	XLII MTH40	XLII MTH45	XLII MTH45E	NOTES
10	571993	SYNCHRONIZER ASSY	1				
11	571994	. SLIDING SLEEVE	1				
13	571995	. SYCHRONIZER RING	2				
15	571996	. BUSHING	6				
17	571997	. COMPRESSION SPRING	6				

From Y-7046 To 3-8164		Date:07/2024	PAGE:Y2-0750-00
AUTOMATIC TRANSMISSION - "WORLD" WITH DETROIT S-60			

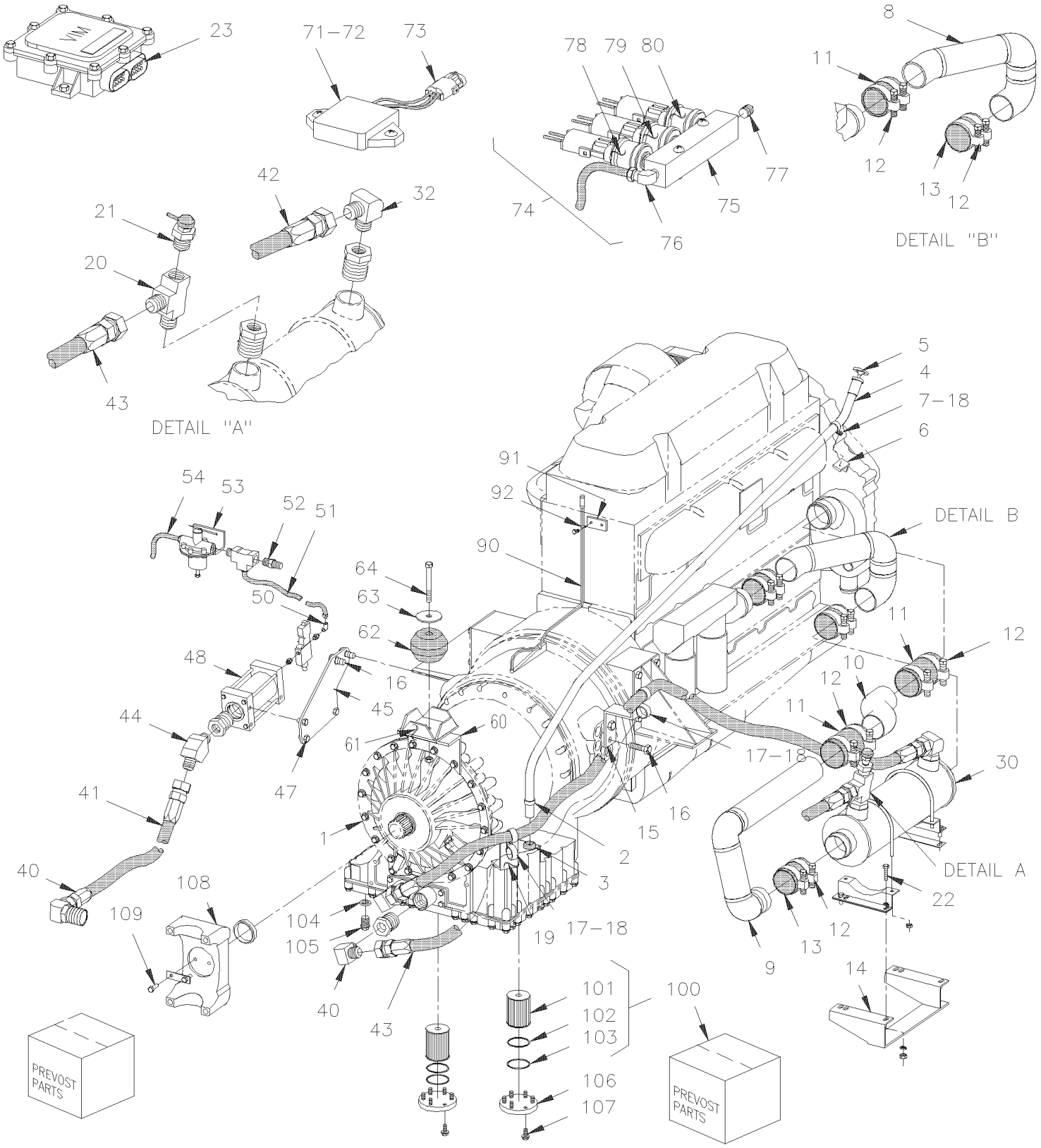

From Y-7046 To 3-8164		Date:07/2024	PAGE:Y2-0750-00

AUTOMATIC TRANSMISSION - "WORLD" WITH DETROIT S-60

Item#	Part	Description	XLII 45	XLII MTH40	XLII MTH45	XLII MTH45E	NOTES
		. . . . . "WARNING" - "WARNING" - "WARNING"					
		FROM VIN 3-7976 SOME VEHICLES HAVE "O.E.M." INSTALL					
		INSTALLATION AS SHOWN AT PAGE Y2-0750-99					
		THE NEXT FOLLOWING TRANSMISSION W/O RETARDER					
		ARE USED WITH 11.1 LITERS					
	571680	TRANSMISSION ASSY B500 / WTEC III	1				
	571742	E.C.U. B500 / WTEC III					
		THE NEXT FOLLOWING TRANSMISSION W/RETARDER					
		ARE USED WITH 11.1 LITERS					
	571720	TRANSMISSION ASSY B500R	1				
	571742	E.C.U. B500 / WTEC III					
		THE NEXT FOLLOWING TRANSMISSION W/O RETARDER					
		ARE USED WITH 12.7 LITERS					
	571702	TRANSMISSION ASSY B500 / WTEC III	1				
	571726	TRANSMISSION ASSY HD4060 To Y-7164		1	1	1	
	571756	TRANSMISSION ASSY HD4060 / WTEC III From Y-7165		1	1	1	
	571743	E.C.U. HD4060R / WTEC III					
		THE NEXT FOLLOWING TRANSMISSION W/RETARDER					
		ARE USED WITH 12.7 LITERS					
	571719	TRANSMISSION ASSY B500R	1				
	571725	TRANSMISSION ASSY HD4060 To Y-7164		1	1	1	
	571757	TRANSMISSION ASSY HD4060 From Y-7165		1	1	1	
	571743	E.C.U. HD4060R / WTEC III	1	1	1	1	
		TRANSMISSION ASSY / SEE ABOVE					
2	504602	. CLAMP / 1" I.D. X .375 HOLE	1	1	1	1	
NS	502513	. SCREW TP CAP HEX 5/16x1 Z050	1	1	1	1	
3	571662	. GROMMET RUBBER / TUBE & TRANS	1	1	1	1	
4	070864	TUBE DIPSTICK	1	1	1	1	
5	571567	TRANS DIPSTICK 2134.9MM	1	1	1	1	
NS	070945	DECAL "DEXRON III OIL ONLY" To 2-7825	1	1	1	1	
NS	071249	DECAL "TranSynd OIL ONLY" / ENGLISH & FRANCAIS From 2-7826	1	1	1	1	
NS	071364	DECAL "TranSynd OIL ONLY" / ENGLISH & SPANISH From 2-7826	1	1	1	1	
6	061129	SUPPORT FLAT TWISTED / TUBE DIPSTICK	1	1	1	1	

From Y-7046 To 3-8164		Date:07/2024	PAGE:Y2-0750-00

AUTOMATIC TRANSMISSION - "WORLD" WITH DETROIT S-60

Item#	Part	Description	XLII 45	XLII MTH40	XLII MTH45	XLII MTH45E	NOTES
6	070887	SUPPORT ANGLE / TUBE DIPSTICK	1	1	1	1	
6	070368	SUPPORT	1	1	1	1	
6	070938	SUPPORT	1	1	1	1	
NS	5001003	WASHER LO SPT 8.1x12.7x2.0 Z050	1	1	1	1	
NS	500069	SCREW CAP HEX M8-1.25x16 G10.9 DP	1	1	1	1	
7	560484	CLAMP / 1" I.D.	1	1	1	1	
8	070890	PIPE ASSY	1	1	1	1	
9	051854	PIPE ASSY	1	1	1	1	
10	N.S.P.	PIPE ASSY / WATER PUMP & PIPE / (23005899)	1	1	1	1	2
11	051604	HOSE 2 3/4" I.D. 130MM	2	2	2	2	
. NS	503395	. HOSE SILICONE 4PLY 2 3/4" I.D. x 3'	AR	AR	AR	AR	
11	051094	HOSE 2 3/4" I.D. 3 1/8"	1	1	1	1	
. NS	503395	. HOSE SILICONE 4PLY 2 3/4" I.D. x 3'	AR	AR	AR	AR	
11	503395	. HOSE SILICONE 4PLY 2 3/4" I.D. x 3'	AR	AR	AR	AR	
12	504562	HOSE CLAMP / 2"3/4-3"5/8 / C.T. 350	AR	AR	AR	AR	
13	070968	HOSE 3" I.D. 185MM	1	1	1	1	
13	070969	HOSE 3" I.D. 140MM	1	1	1	1	
13	503396	. HOSE SILICONE 3" I.D. x 3'	AR	AR	AR	AR	
14	070892	SHIM / ENGINE CRADLE & OIL COOLER SUPPORT 26x166x1/4" / 140c/c	2	2	2	2	C
15	070884	SUPPORT "Z" SHAPE	1	1	1	1	
16	500813	SCREW CAP HEX M16-2.0x35 G8.8 ZP	3	3	3	3	
NS	500802	WASHER LO SPT 16.2x37.4x3.5 Z050	3	3	3	3	
17	560912	CLAMP / 1"1/4 I.D.	4	4	4	4	
18	502698	SCREW MA PAN PH M4-0.7x16 SS BK	3	3	3	3	
NS	500590	NUT HEX NYRT M4-0.7 Z050	3	3	3	3	
19	070944	SUPPORT / HOSES	1	1	1	1	
NS	502644	WASHER FL 10.5x30.0x2.5 Z050	1	1	1	1	
NS	502549	SCREW CAP HEX M10-1.5x35 G8.8 Z050	1	1	1	1	
20	5011083	ADAPTER TEE / SAE 45º FITTING / #16FL-Mx1/2NPT-Fx#16ORB-M TO USED W/TEMP SENDER	1	1	1	1	
20	5011074	ADAPTER TEE / SAE 45º FITTING / #20FL-Mx1/2NPT-Fx#20ORB-M TO USED W/TEMP SENDER	1	1	1	1	
21	561097	SENSOR, TEMPERATURE / WATER & OIL	1	1	1	1	
22	502559	SCREW CAP HEX M10-1.5x25 G8.8 Z050	4	4	4	4	
NS	500257	WASHER LO SPT 10.2x18.1x2.2 Z050	8	8	8	8	
NS	500256	NUT HEX M10-1.5 Z050	4	4	4	4	
NS	502589	SCREW CAP HEX M8-1.25x25 G8.8 Z050	4	4	4	4	C
NS	5001003	WASHER LO SPT 8.1x12.7x2.0 Z050	8	8	8	8	
NS	502543	NUT HEX M8-1.25 Z050	4	4	4	4	
23	571542	MODULE INTERFACE	1	1	1	1	
NS	064716	CABLE ASSY / TRANS & SPEED SWITCH To Y-7351	1	1	1	1	E A
23	065752	CABLE ASSY / TRANS & SPEED SWITCH / SERVICE To Y-7351	1	1	1	1	E
NS	065331	CABLE ASSY / TRANS & SPEED SWITCH / W/O RETARDER From Y-7352 To 3-7984	1	1	1	1	C
23	065751	CABLE ASSY / TRANS & SPEED SWITCH / W/O RETARDER From 3-7985	1	1	1	1	C

From Y-7046 To 3-8164		Date:07/2024	PAGE:Y2-0750-00

AUTOMATIC TRANSMISSION - "WORLD" WITH DETROIT S-60

Item#	Part	Description	XLII 45	XLII MTH40	XLII MTH45	XLII MTH45E	NOTES
NS	065330	CABLE ASSY / TRANS & SPEED SWITCH / W/RETARDER From Y-7365 To 3-7984	1	1	1	1	E
23	065750	CABLE ASSY / TRANS & SPEED SWITCH / W/RETARDER From 3-7985	1	1	1	1	E
NS	071035	SUPPORT CABLE HARNESS / W/2 HOLES / WTEC III	1	1	1	1	
30	550708	OIL COOLER W/1" NPT / (2950137)	2	2	2	2	C
30	550795	OIL COOLER W/ #20 ORB (1" STRAIGHT THREAD)	1	1	1	1	E F
. NS	550948	. SUPPORT	1	1	1	1	E F
. NS	550949	. SUPPORT	1	1	1	1	E F
. NS	550950	. U-BOLT 3/8-16	2	2	2	2	E F
. NS	502510	. WASHER FL .375x.875x.083	4	4	4	4	E F
. NS	500265	. NUT HEX STO 3/8-16 Z050	4	4	4	4	E F
30	Y2-0750-99	OIL COOLER "MODINE" - "RETROFIT"					
NS	550806	. CORE ASSY OIL COOLER	1	1	1	1	
NS	550807	. O-RING 5.859 DIA x .140	1	1	1	1	
NS	550808	. O-RING 6.234 DIA x .140	1	1	1	1	
32	5011065	MALE ELBOW 90° / JIC 37° FITTING / #20JIC-Mx#20ORB-M STL VITON	2	2	2	2	
NS	501523	MALE ELBOW 90° / JIC 37° FITTING / #16JIC-Mx#16ORB-M STL	2	2	2	2	
40	5011065	MALE ELBOW 90° / JIC 37° FITTING / #20JIC-Mx#20ORB-M STL VITON	4	4	4	4	
41	070880	HOSE ASSY / #20 310MM	1	1	1	1	
42	070965	HOSE ASSY / #16 1890MM	1	1	1	1	C
NS	070885	HOSE ASSY / #20 2018MM To 1-7413	1	1	1	1	E
42	071221	HOSE ASSY / #20 2018MM From 1-7414	1	1	1	1	E
43	070939	HOSE ASSY / #16 1505MM	1	1	1	1	C
NS	051688	HOSE ASSY / #20 1505MM To 1-7413	1	1	1	1	E
43	071220	HOSE ASSY / #20 1560MM From 1-7414	1	1	1	1	E
NS	503423	. HOSE #FC-300 HYDRAULIC / #16 S.L.	AR	AR	AR	AR	
NS	501343	. FEMALE CONNECTOR SWIVEL / JIC 37° FITTING / #20JIC-Fx#20 ZP	2	2	2	2	
NS	503516	. HOSE #FC-300 HYDRAULIC / #20 S.L.	AR	AR	AR	AR	
NS	501608	. FEMALE CONNECTOR SWIVEL / JIC 37° FITTING / #16JIC-Fx#16 STL	2	2	2	2	
NS	071027	PROTECTOR RUBBER / FIXED END OF HOSE 204MM X 311MM	1	1	1	1	
NS	071096	PROTECTOR SUPPORT SS ANGLE SHAPE 61MM X 73MM	1	1	1	1	C
NS	071097	PROTECTOR SUPPORT SS 102MM X 90MM	1	1	1	1	E
NS	502559	SCREW CAP HEX M10-1.5x25 G8.8 Z050	1	1	1	1	B
NS	502644	WASHER FL 10.5x30.0x2.5 Z050	1	1	1	1	B
44	501575	MALE CONNECTOR / JIC 37° FITTING / #20JIC-Mx#20ORB-M STL VITON	1	1	1	1	
44	507558	MALE ELBOW 45º / JIC 37° FITTING / #20JIC-Mx#20ORB-M STL VITON	1	1	1	1	
		FOLLOWING PARTS ARE RELATED WITH					
		TRANSMISSION WITH RETARDER ONLY					
45	071014	SUPPORT / TRANS & ACUMULATOR / WTEC III	1	1	1	1	
47	502790	SCREW CAP HEX M8-1.25x20 G8.8 Z050	4	4	4	4	
NS	5001003	WASHER LO SPT 8.1x12.7x2.0 Z050	3	3	3	3	

From Y-7046 To 3-8164		Date:07/2024	PAGE:Y2-0750-00

AUTOMATIC TRANSMISSION - "WORLD" WITH DETROIT S-60

Item#	Part	Description	XLII 45	XLII MTH40	XLII MTH45	XLII MTH45E	NOTES
NS	502543	NUT HEX M8-1.25 Z050	4	4	4	4	
48	571745	ACCUMULATOR & SOLENOID / WTEC III	1	1	1	1	
. NS	571707	. ACCUMULATOR	1	1	1	1	
. NS	571708	. VALVE SOLENOID 12V	1	1	1	1	
50	5011112	FEMALE ELBOW 90° / JIC 37° FITTING / #6JIC-Mx3/8NPT-F STL	1	1	1	1	
51	140376	HOSE ASSY TEFLON #6 686MM	1	1	1	1	
NS	070882	HOSE ASSY TEFLON #6 570MM	1	1	1	1	
NS	141787	HOSE ASSY TEFLON #6 902MM	1	1	1	1	
NS	503065	. HOSE TEFLON #6 / S.L.	AR	AR	AR	AR	
NS	501595	. FEMALE CONNECTOR SWIVEL / JIC 37° FITTING / TEFLON / #6JIC-Fx#6 STL	2	2	2	2	
52	640488	VALVE, AIR FILL 1/8" NPT	1	1	1	1	
. NS	650164	. CAP VALVE / CHROME	1	1	1	1	
53	641437	AIR PRESSURE REGULATOR 1/4" NPT / PLASTIC	1	1	1	1	
54	503404	TUBE, NYLON 3/8 O.D. / BLACK S.L.	AR	AR	AR	AR	H
NS	560479	CLAMP / 3/8" I.D.	1	1	1	1	
NS	500613	SCREW TP PAN PH #10x1/2 Z050	1	1	1	1	
60	N.S.P.	SUPPORT REAR / (29507888)	1		1		2
NS	070964	SUPPORT REAR		1		1	
61	070950	GUIDE REAR	1	1	1	1	
62	630118	RUBBER BUMPPER	1	1	1	1	
63	550642	WASHER	1	1	1	1	
NS	571351	WASHER, 1/2" I.D. FLAT	1	1	1	1	
64	500106	SCREW CAP HEX 1/2-20x6 G5 PT Z050	1	1	1	1	
65	500718	NUT HEX STO 1/2-20 Z050	1	1	1	1	
71	562357	RESISTANCE MODULE	1	1	1	1	
72	562381	RESISTANCE MODULE	1	1	1	1	
73	063782	CABLE ASSY / RESISTANCE MODULE & SWITCH	1	1	1	1	
74	070902	PRESSURES SWITCH ASSY W/MANIFOLD	1	1	1	1	
75	070903	. MANIFOLD	1	1	1	1	
76	640999	. MALE ELBOW 90º / NTA FITTING / #6x1/4NPT-M BR	1	1	1	1	
77	501304	. PLUG SQUARE HEAD / PIPE FITTING / 1/4NPT-M BR	1	1	1	1	
78	562358	. PRESSURE SWITCH N.O. 2PSI / 1/8NPT	1	1	1	1	
79	562384	. PRESSURE SWITCH N.O. 4PSI / 1/8NPT	1	1	1	1	
80	562385	. PRESSURE SWITCH N.O. 7PSI / 1/8NPT	1	1	1	1	
90	071170	HOSE ASSY / #4 24"	1	1	1	1	
. A	071167	. FEMALE CONNECTOR / HOSE BARB @ METRIC / #4x M10-1.5-F BR	1	1	1	1	
. B	071166	. MALE CONNECTOR / HOSE BARB @ METRIC / #4x M10-1.5-M BR	1	1	1	1	
91	061025	SUPPORT	1	1	1	1	
NS	504601	CLAMP / 5/16" I.D. x .375 HOLE	1	1	1	1	
92	571763	BREATHER	1	1	1	1	
100	571709	TRANSMISSION FILTER / MAINTENANCE KIT	AR	AR	AR	AR	I

From Y-7046 To 3-8164		Date:07/2024	PAGE:Y2-0750-00

AUTOMATIC TRANSMISSION - "WORLD" WITH DETROIT S-60

Item#	Part	Description	XLII 45	XLII MTH40	XLII MTH45	XLII MTH45E	NOTES
101	N.S.S.	. FILTER	2	2	2	2	1
102	571692	. O-RING / (LARGE SQUARE CUT)	2	2	2	2	
103	571693	. O-RING / (SMALL)	2	2	2	2	
104	571694	. O-RING / DRAIN PLUG	2	2	2	2	
105	571695	DRAIN PLUG ASSY W/O-RING	1	1	1	1	
NS	682507	OIL, DEXRON III / TRANS (VRAC) To 2-7825	1	1	1	1	
NS	684016	OIL TRANSYND TRANSMISSION "WORLD" From 2-7826	1	1	1	1	
106	N.S.P.	COVER FILTER / (29507434)	2	2	2	2	2
107	N.S.P.	BOLT M10-1.5 x 55M / (2954186)	AR	AR	AR	AR	2
108	N.S.P.	YOKE (1810) HALF ROUND(29511516/6.5-4-4521-1)	1	1	1	1	2
108	N.S.P.	STRAP LOCK PLATE	1	1	1	1	2
108	N.S.P.	BOLT M10-1.5 X 30MM GR 10.9	2	2	2	2	2
108	N.S.P.	SEAL OUTPUT / (29515621)	1	1	1	1	2
109	N.P.N.	BOLT M10-1.5 X 30MM GR10.9	1	1	1	1	4
NS	683904	TESTING FOR GLYCOL CONTAMINATION IN TRANSMISSION OIL	1	1	1	1	
. NS	IS-99901A	. SEE INSTRUCTION SHEET	1	1	1	1	
200	**071269**	**OIL COOLER " WORLD" TRANSMISION "MODINE" - / "RETROFIT" From Y-7046 To 3-8164**					
		A) FOR PRODUCT IMPROVMENT USE CABLE #065752					
		B) TO FIX PROTECTOR					
		C) W/O RETARDER					
		E) W/RETARDER					
		F) FOR PRODUCT IMPROVEMENT ASK FOR KIT #071269					
		H) REGULATOR & MANIFOLD					
		I) (29526899)					
		1) NOT SOLD SEPARATELY					
		2) NOT SOLD BY PREVOST (SEE MANUFACTURING PART NUMBER AT END OF DESCRIPTION LINE)					
		4) NO PARTS NUMBER					

From Y-7046 To 3-8164		Date:07/2024	PAGE:071269
OIL COOLER " WORLD" TRANSMISION "MODINE" - / "RETROFIT"			

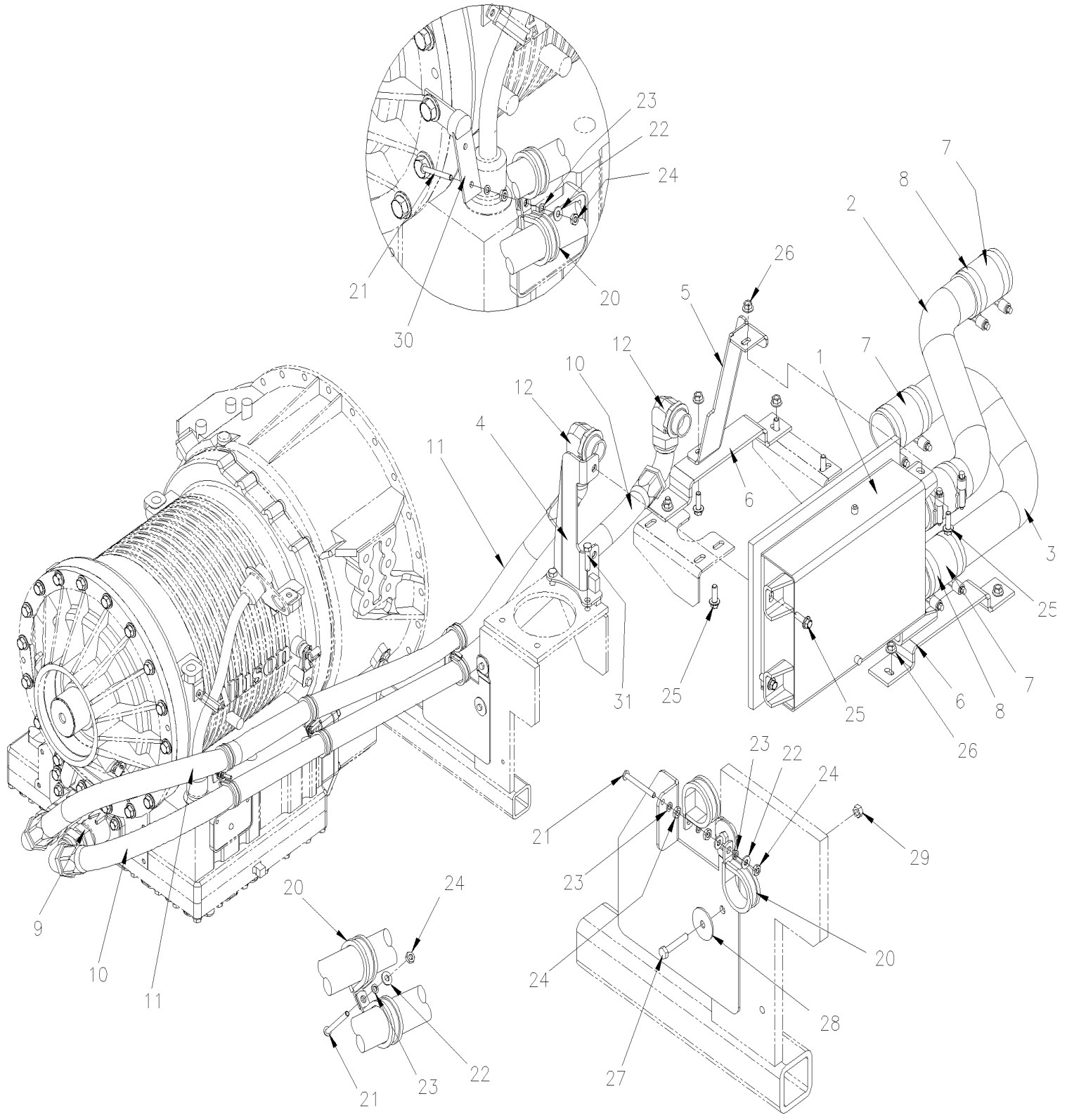

From Y-7046 To 3-8164		Date:07/2024	PAGE:071269
OIL COOLER " WORLD" TRANSMISION "MODINE" - / "RETROFIT"			

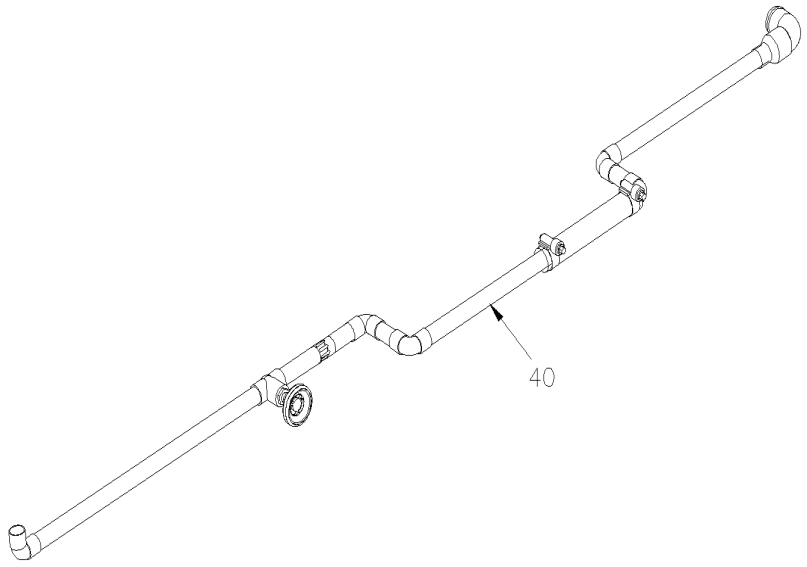

WITH MTH-45 WITH SMALL A/C
NOT INCLUDE WITH 071269

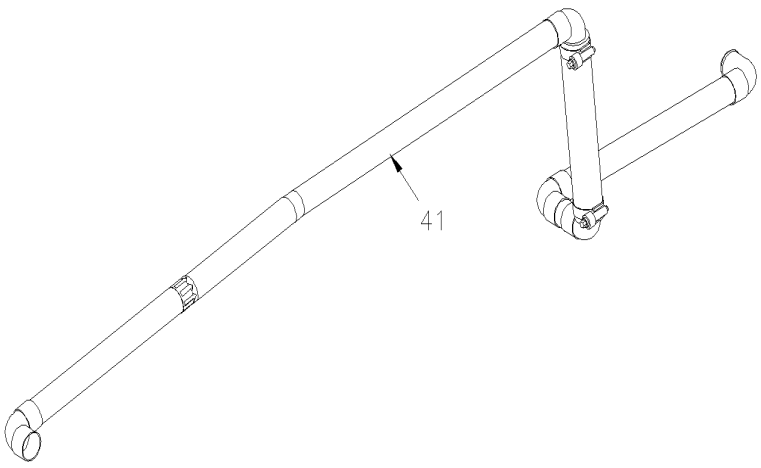

WITH MTH-45 & XL-45 WITH LARGE A/C
NOT INCLUDE WITH 071269

From Y-7046 To 3-8164		Date:07/2024	PAGE:071269

OIL COOLER " WORLD" TRANSMISION "MODINE" - / "RETROFIT"

Item#	Part	Description	XLII 45	XLII MTH40	XLII MTH45	XLII MTH45E	NOTES
		PRODUCT IMPROVEMENT WITH TRANS WITH RETARDER					
1	571779	. OIL COOLER "MODINE" / SINGLE	1	1	1	1	
. NS	G1091499	. . GASKET	1	1	1	1	
. NS	G1091503	. . BOLTING BAR SHORT	2	2	2	2	
. NS	G1091502	. . BOLTING BAR LONG	2	2	2	2	
2	071256	. PIPE COOLER	1	1	1	1	
3	071255	. PIPE COOLER	1	1	1	1	
4	071258	. SUPPORT TRANS SIDE	1	1	1	1	
5	071254	. SUPPORT WATER PUMP SIDE	1	1	1	1	
6	071265	. ADAPTOR SUPPORT	2	2	2	2	
7	071250	. HOSE 2 3/4" I.D. X 100MM	4	4	4	4	
7	503395	. . HOSE SILICONE 4PLY 2 3/4" I.D. x 3'	AR	AR	AR	AR	
8	504562	. HOSE CLAMP / 2"3/4-3"5/8 / C.T. 350	8	8	8	8	
9	501575	. MALE CONNECTOR / JIC 37° FITTING / #20JIC-Mx#20ORB-M STL VITON	2	2	2	2	
10	071266	. HOSE ASSY / #20 1555MM	1	1	1	1	
11	071267	. HOSE ASSY / #20 1481MM	1	1	1	1	
12	5011065	. MALE ELBOW 90° / JIC 37° FITTING / #20JIC-Mx#20ORB-M STL VITON	2	2	2	2	
13	071260	. SUPPORT, HOSE	1	1	1	1	
20	952641	. CLAMP P STL ZP RUB 34.9 ID	4	4	4	4	
21	500579	. SCREW MA RND PH #10-24x1 3/4 Z050	2	2	2	2	
22	500470	. WASHER LO SPT .193x.334x.047 Z050	6	6	6	6	
23	500964	. WASHER FL .203x.500x.047 Z050	4	4	4	4	
24	500786	. NUT HEX #10-24 Z050	6	6	6	6	
25	946472	. SCREW CAP HEXF M10-1.5x30 G8.8 ZG603	9	9	9	9	
26	971098	. NUT HEXF STO M10-1.5 G8 ZP	2	2	2	2	
27	502818	. SCREW CAP HEX M6-1.0x35 G8.8 Z050	2	2	2	2	
28	500468	. WASHER FL .281x1.250x.065 Z050	2	2	2	2	
29	502621	. NUT HEX STO M6-1.0 Z050	2	2	2	2	
30	061129	. SUPPORT FLAT TWISTED / TUBE DIPSTICK	1	1	1	1	
31	500829	. SCREW CAP HEX M10-1.5x40 G8.8	2	2	2	2	
40	373895	PIPE RETURN / ENGINE WATER PUMP	1		1		B
41	373903	PIPE RETURN / ENGINE WATER PUMP			1		C
		B) REQUIRE FOR BUS & MTH-45 WITH LARGE A/C SYSTEM AND IT NOT INCLUDE WITH KIT # 071269					
		C) USE ONLY WITH MTH-45 WITH SMALL AC SYSTEM WITH RETARDER AND IT NOT INCLUDE WITH KIT # 071269					

From 4-8165 To 8-9339		Date:07/2024	PAGE:Y2-0750-01
AUTOMATIC TRANSMISSION - "WORLD" WITH DETROIT S-60			

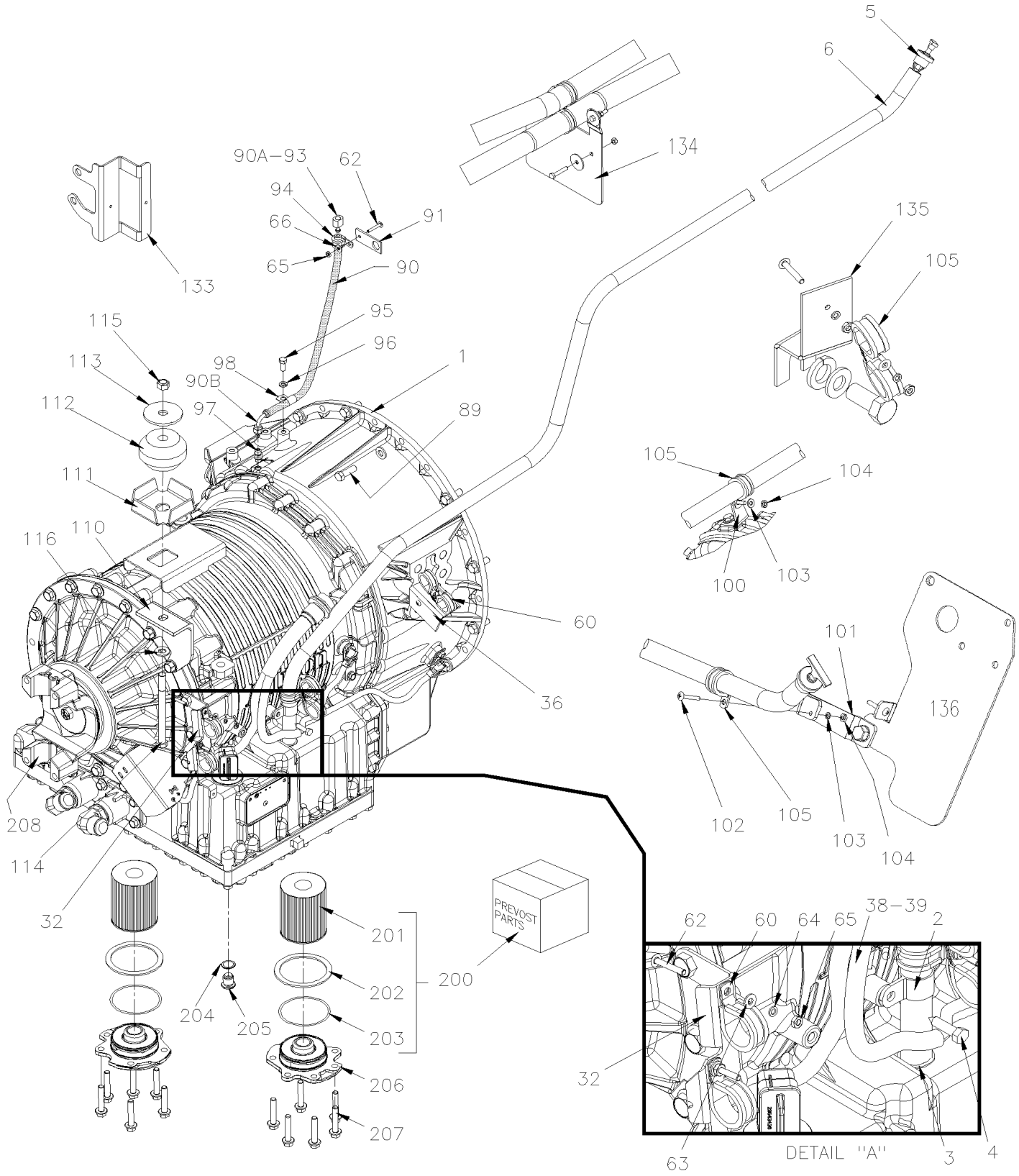

From 4-8165 To 8-9339		Date:07/2024	PAGE:Y2-0750-01
AUTOMATIC TRANSMISSION - "WORLD" WITH DETROIT S-60			

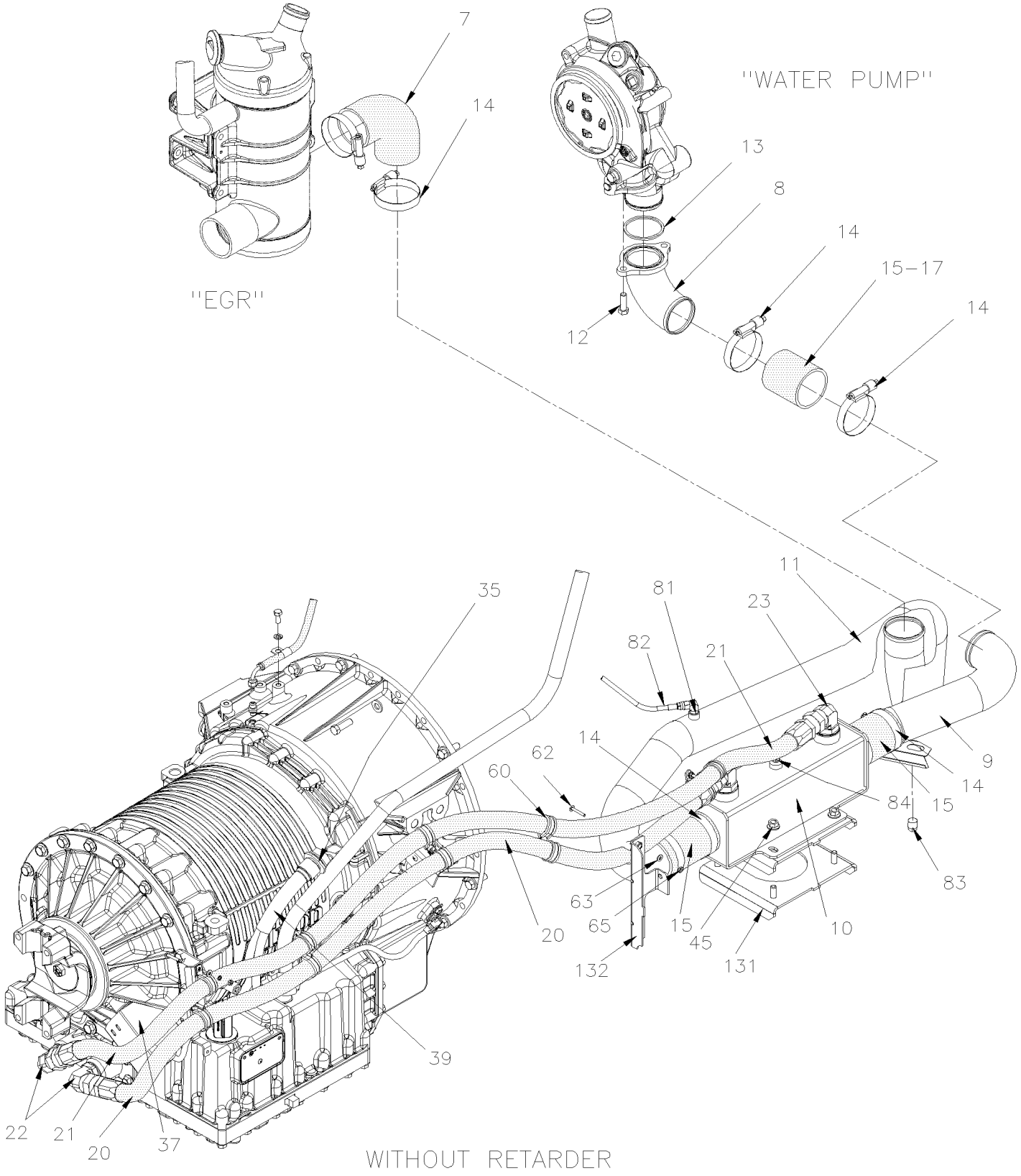

From 4-8165 To 8-9339		Date:07/2024	PAGE:Y2-0750-01

AUTOMATIC TRANSMISSION - "WORLD" WITH DETROIT S-60

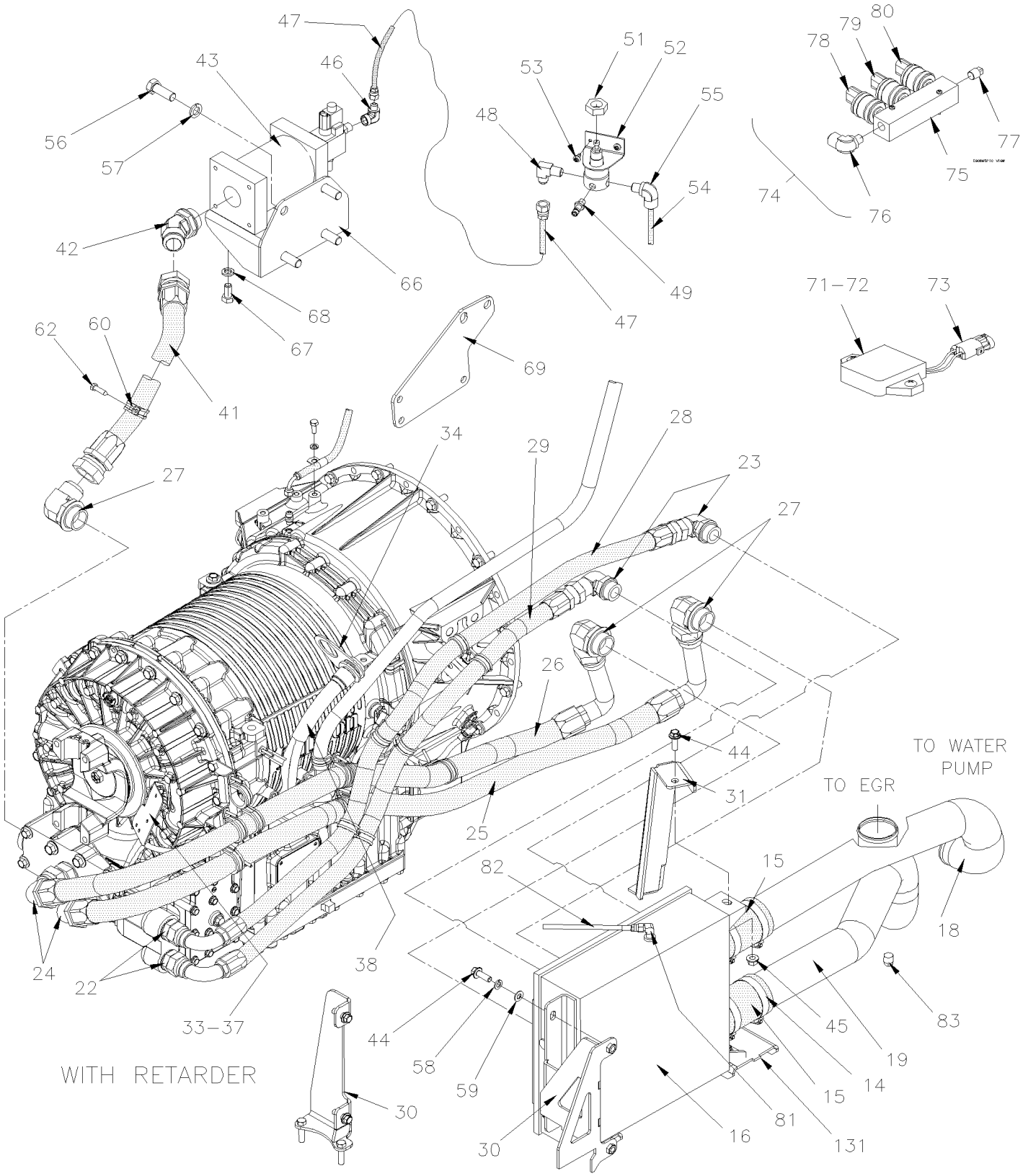

From 4-8165 To 8-9339		Date:07/2024	PAGE:Y2-0750-01

AUTOMATIC TRANSMISSION - "WORLD" WITH DETROIT S-60

Item#	Part	Description	XLII 45	XLII MTH40	XLII MTH45	XLII MTH45E	NOTES
		THE NEXT FOLLOWING TRANSMISSION W/O RETARDER	1	1	1	1	
		ARE USED WITH 12.7 LITERS / 350HP					
	571680	TRANSMISSION ASSY B500 / WTEC III To 6-8906	1				
	571742	E.C.U. B500 / WTEC III To 6-8906	1				
		THE NEXT FOLLOWING TRANSMISSION W/RETARDER					
		ARE USED WITH 12.7 LITERS / 350HP					
	571781	TRANSMISSION ASSY B500R / WTEC III To 6-8906	1				
	571742	E.C.U. B500 / WTEC III To 6-8906	1				
		THE NEXT FOLLOWING TRANSMISSION W/O RETARDER					
		ARE USED WITH 12.7 LITERS / 400HP					
	571702	TRANSMISSION ASSY B500 / WTEC III To 6-8906	1				
	571756	TRANSMISSION ASSY HD4060 / WTEC III To 7-9043		1	1	1	
	572033	TRANSMISSION ASSY 4000MH / GEN IV From 7-9044			1	1	
	571743	E.C.U. HD4060R / WTEC III To 7-9043	1	1	1	1	
	572037	E.C.U. HD4060R / GEN IV From 7-9044			1	1	
		THE NEXT FOLLOWING TRANSMISSION W/RETARDER					
		ARE USED WITH 12.7 LITERS / 400HP					
	571719	TRANSMISSION ASSY B500R To 6-8906	1				
	571780	TRANSMISSION ASSY B500R / WTEC III To 6-8906	1				
	571757	TRANSMISSION ASSY HD4060		1	1	1	
	571782	TRANSMISSION ASSY HD4060 / WTEC III To 7-9043		1	1	1	
	572034	TRANSMISSION ASSY 4000MH / GEN IV From 7-9044			1	1	
	571743	E.C.U. HD4060R / WTEC III To 7-9043	1	1	1	1	
	572037	E.C.U. HD4060R / GEN IV From 7-9044			1	1	
		TRANSMISSION ASSY / SEE ABOVE					
NS	683276	GREASE LOW TEMPERATURE 450GR	AR	AR	AR	AR	
2	504602	CLAMP / 1" I.D. X .375 HOLE	1	1	1	1	
3	571662	GROMMET RUBBER / TUBE & TRANS	1	1	1	1	
4	5001473	SCREW CAP HEXS 5/16-18x3/4 NYRT	1	1	1	1	
5	571778	TRANS DIPSTICK 2211.7MM To 4-8267	1	1	1	1	
5	572023	TRANS DIPSTICK 2261.7MM From 4-8268	1	1	1	1	
6	071241	TUBE DIPSTICK To 4-8267	1	1	1	1	
6	071326	TUBE DIPSTICK From 4-8268	1	1	1	1	

From 4-8165 To 8-9339		Date:07/2024	PAGE:Y2-0750-01

AUTOMATIC TRANSMISSION - "WORLD" WITH DETROIT S-60

Item#	Part	Description	XLII 45	XLII MTH40	XLII MTH45	XLII MTH45E	NOTES
7	052600	ELBOW 90° X 2 3/4" I.D. / 110MM x 110MM C/C / SILICONE To 8-9293	1	1	1	1	
7	052898	ELBOW 90° X 2 3/4" I.D. / 110MM x 110MM C/C / SILICONE From 8-9294	1	1	1	1	
8	071231	ELBOW 90°	1	1	1	1	
9	071240	PIPE WATER PUMP TO OIL COOLER / W/O RETARDER	1	1	1	1	
10	571769	OIL COOLER "MODINE" / SINGLE	1	1	1	1	
11	071239	PIPE OIL COOLER TO EGR / W/O RETARDER	1	1	1	1	
11	071543	PIPE OIL COOLER TO EGR / SS / W/O RETARDER SERVICE	1	1	1	1	
12	510779	BOLT / TO FIX ELBOW	2	2	2	2	
13	510778	O-RING 2.612 I.D.	1	1	1	1	
14	504562	HOSE CLAMP / 2"3/4-3"5/8 / C.T. 350	8	8	8	8	
15	071250	HOSE 2 3/4" I.D. X 100MM	2	2	2	2	
15	503395	. HOSE SILICONE 4PLY 2 3/4" I.D. x 3'	AR	AR	AR	AR	
16	571770	OIL COOLER "MODINE" / DOUBLE	1	1	1	1	
17	071268	HOSE SILICONE 4 PLY 2 3/4" I.D X 84MM	1	1	1	1	
17	503395	. HOSE SILICONE 4PLY 2 3/4" I.D. x 3'	AR	AR	AR	AR	
18	071234	PIPE WATER PUMP TO OIL COOLER To 4-8345	1	1	1	1	
18	071338	PIPE WATER PUMP TO OIL COOLER From 4-8346	1	1	1	1	
19	071233	PIPE OIL COOLER TO EGR To 4-8345	1	1	1	1	
19	071541	PIPE OIL COOLER TO EGR / SS SERVICE To 4-8345	1	1	1	1	
19	071339	PIPE OIL COOLER TO EGR From 4-8346	1	1	1	1	
19	071542	PIPE OIL COOLER TO EGR / SS SERVICE From 4-8346	1	1	1	1	
20	071262	HOSE ASSY / #16 1480MM	1	1	1	1	C
20	079024	HOSE ASSY / #16 1520MM	1	1	1	1	
21	071261	HOSE ASSY / #16 1795MM	1	1	1	1	B
21	079023	HOSE ASSY / #16 1840MM	1	1	1	1	
22	501573	MALE CONNECTOR / JIC 37° FITTING / #16JIC-Mx#16ORB-M STL	2	2	2	2	O
22	501523	MALE ELBOW 90° / JIC 37° FITTING / #16JIC-Mx#16ORB-M STL	2	2	2	2	O
22	501573	MALE CONNECTOR / JIC 37° FITTING / #16JIC-Mx#16ORB-M STL	2	2	2	2	R
23	501523	MALE ELBOW 90° / JIC 37° FITTING / #16JIC-Mx#16ORB-M STL	2	2	2	2	
24	501575	MALE CONNECTOR / JIC 37° FITTING / #20JIC-Mx#20ORB-M STL VITON	2	2	2	2	
25	071246	HOSE ASSY / #20 1590MM To 4-8345	1	1	1	1	
25	071332	HOSE ASSY / #20 1385MM From 4-8346	1	1	1	1	
26	071245	HOSE ASSY / #20 1492MM To 4-8345	1	1	1	1	
26	071331	HOSE ASSY / #20 1287MM From 4-8346	1	1	1	1	
27	5011065	MALE ELBOW 90° / JIC 37° FITTING / #20JIC-Mx#20ORB-M STL VITON	2	2	2	2	
28	071247	HOSE ASSY / #16 1385MM To 4-8345	1	1	1	1	
28	071333	HOSE ASSY / #16 1240MM From 4-8346	1	1	1	1	
29	071248	HOSE ASSY / #16 1141MM To 4-8345	1	1	1	1	
29	071334	HOSE ASSY / #16 996MM From 4-8346	1	1	1	1	
30	071232	ATTACHMENT / 305MM HIGHT To 4-8345	1	1	1	1	
30	071343	ATTACHMENT / 255MM HIGHT From 4-8346	1	1	1	1	
31	071244	ATTACHMENT To 4-8345	1	1	1	1	

From 4-8165 To 8-9339		Date:07/2024	PAGE:Y2-0750-01

AUTOMATIC TRANSMISSION - "WORLD" WITH DETROIT S-60

Item#	Part	Description	XLII 45	XLII MTH40	XLII MTH45	XLII MTH45E	NOTES
31	071328	ATTACHMENT From 4-8346	1	1	1	1	
32	071259	SUPPORT, HOSE To 7-9043	1	1	1	1	
32	071407	SUPPORT HOSE From 7-9044	1	1	1	1	
33	071096	PROTECTOR SUPPORT SS ANGLE SHAPE 61MM X 73MM To 7-9241	1	1	1	1	O S
33	071097	PROTECTOR SUPPORT SS 102MM X 90MM To 7-9241	1	1	1	1	R S
34	071035	SUPPORT CABLE HARNESS / W/2 HOLES / WTEC III To 7-9000	1	1	1	1	
35	071403	SUPPORT CABLE HARNESS / W/1 HOLE & 1 STUD / GEN IV From 7-9001	1	1	1	1	
36	070884	SUPPORT "Z" SHAPE To 4-8345	1	1	1	1	
36	071305	SUPPORT "J" SHAPE From 4-8346	1	1	1	1	
37	071440	PROTECTOR SUPPORT SS "V" SHAPE 80MM HIGH From 7-9044	1	1	1	1	
37	079022	PROTECTOR SUPPORT SS "V" SHAPE 74MM HIGH From 7-9044	1	1	1	1	
38	066208	CABLE HARNESS / SENSOR WTEC W/RETARDER / MUX From 7-9096	1	1	1	1	
39	066209	CABLE HARNESS / SENSOR WTEC W/OUT RETARDER / MUX From 7-9096	1	1	1	1	
NS	061129	SUPPORT FLAT TWISTED / TUBE DIPSTICK To 7-9043	1	1	1	1	
39	071028	PROTECTOR RUBBER CABLE HARNESS / FIXED HOSE & TRANS To 4-8345	1	1	1	1	
NS	071341	PROTECTOR RUBBER CABLE HARNESS & HOSES From 4-8346 To 7-9043	1	1	1	1	
NS	071408	PROTECTOR RUBBER CABLE HARNESS & HOSES From 7-9044	1	1	1	1	O
NS	071404	PROTECTOR RUBBER CABLE HARNESS & HOSES From 7-9044	1	1	1	1	R
41	070880	HOSE ASSY / #20 310MM To 4-8345					
41	071335	HOSE ASSY / #20 770MM From 4-8346	1	1	1	1	
42	507558	MALE ELBOW 45º / JIC 37° FITTING / #20JIC-Mx#20ORB-M STL VITON	1	1	1	1	
43	571745	ACCUMULATOR & SOLENOID / WTEC III	1	1	1	1	
. NS	571707	. ACCUMULATOR	1	1	1	1	
. NS	571708	. VALVE SOLENOID 12V	1	1	1	1	
43	572030	ACCUMULATOR & SOLENOID / GEN IV	1	1	1	1	
43	571708	. VALVE SOLENOID 12V	1	1	1	1	
44	5001741	SCREW CAP HEXF M10-1.5x30 G8.8 N500	5	5	5	5	
45	5001760	NUT HEXF STO M10-1.5 G8 ZP	5	5	5	5	
46	5011112	FEMALE ELBOW 90° / JIC 37° FITTING / #6JIC-Mx3/8NPT-F STL	1	1	1	1	
47	140376	HOSE ASSY TEFLON #6 686MM To 6-8906	1	1	1	1	
47	142486	HOSE ASSY TEFLON #6 610MM From 4-8346	1	1	1	1	
47	142483	HOSE ASSY TEFLON #6 450MM From 4-8346	1	1	1	1	
48	501687	MALE CONNECTOR / JIC 37° FITTING / #6JIC-Mx1/4NPT-M STL	1	1	1	1	
49	640488	VALVE, AIR FILL 1/8" NPT	1	1	1	1	
. NS	650164	. CAP VALVE / CHROME	1	1	1	1	
50	641472	AIR PRESSURE REGULATOR 1/4" NPT / COPPER	1	1	1	1	
51	500734	NUT HEX JAM 3/4-16 Z050	1	1	1	1	
52	142013	SUPPORT AIR REGULATOR / ANGLE 90DEG STYLE	1	1	1	1	
53	500535	SCREW TP CAP HEX #14x3/4 Z050	2	2	2	2	
NS	500473	WASHER LO SPT .262x.489x.062 Z050	2	2	2	2	
54	503404	TUBE, NYLON 3/8 O.D. / BLACK S.L.	AR	AR	AR	AR	
55	641372	MALE ELBOW 90° NON-SWIVEL / PUSH-IN FITTING / #6x1/4NPT-M BR	1	1	1	1	

From 4-8165 To 8-9339		Date:07/2024	PAGE:Y2-0750-01

AUTOMATIC TRANSMISSION - "WORLD" WITH DETROIT S-60

Item#	Part	Description	XLII 45	XLII MTH40	XLII MTH45	XLII MTH45E	NOTES
56	500225	SCREW CAP HEX 5/8-11x1 G5 Z050	3	3	3	3	
56	500817	SCREW CAP HEX 5/8-11x1 3/4 G5 Z050	3	3	3	3	
57	500484	WASHER LO SPT .635x1.079x.156 Z050	3	3	3	3	
57	500802	WASHER LO SPT 16.2x37.4x3.5 Z050	3	3	3	3	
58	3852496	WASHER LO SPT 10.2x18.1x2.2 ZG603	2	2	2	2	
59	500832	WASHER FL .406x.812x.065 N500	2	2	2	2	
60	952637	CLAMP / 1"1/16 I.D.	AR	AR	AR	AR	
60	952641	CLAMP P STL ZP RUB 34.9 ID	AR	AR	AR	AR	
62	500574	SCREW MA TR PH #10-24x1 1/4 SS	AR	AR	AR	AR	
63	500964	WASHER FL .203x.500x.047 Z050	AR	AR	AR	AR	
64	500470	WASHER LO SPT .193x.334x.047 Z050	AR	AR	AR	AR	
65	500786	NUT HEX #10-24 Z050	AR	AR	AR	AR	
66	071329	SUPPORT / TRANS & ACUMULATOR / WTEC III (168mm c/c holes)	1	1	1	1	
66	071400	SUPPORT / TRANS & ACUMULATOR / GEN IV (155mm c/c holes)	1	1	1	1	
67	500213	SCREW CAP HEX 1/2-13x1 G5 Z050	4	4	4	4	
68	500482	WASHER LO SPT .506x.873x.125 Z050	4	4	4	4	
69	071014	SUPPORT / TRANS & ACUMULATOR / WTEC III To 4-8345	1	1	1	1	
71	562357	RESISTANCE MODULE	1	1	1	1	
72	562381	RESISTANCE MODULE	1	1	1	1	
73	063782	CABLE ASSY / RESISTANCE MODULE & SWITCH	1	1	1	1	
74	070902	PRESSURES SWITCH ASSY W/MANIFOLD	1	1	1	1	
75	070903	. MANIFOLD	1	1	1	1	
76	640999	. MALE ELBOW 90º / NTA FITTING / #6x1/4NPT-M BR	1	1	1	1	
77	501304	. PLUG SQUARE HEAD / PIPE FITTING / 1/4NPT-M BR	1	1	1	1	
78	562358	. PRESSURE SWITCH N.O. 2PSI / 1/8NPT	1	1	1	1	
79	562384	. PRESSURE SWITCH N.O. 4PSI / 1/8NPT	1	1	1	1	
80	562385	. PRESSURE SWITCH N.O. 7PSI / 1/8NPT To A-9625	1	1	1	1	
81	501037	MALE ELBOW 90º / SAE 45º FITTING / #4FL-Mx1/4NPT-M BR	1	1	1	1	
81	501027	MALE CONNECTOR / SAE 45º FITTING / #4FL-Mx1/4NPT-M BR	1	1	1	1	
82	052509	HOSE ASSY TEFLON #4 1170MM	1	1	1	1	
83	501129	EXTERNAL SEAL DRAIN 1/4 NPT To 8-9293	1	1	1	1	
83	501449	PLUG HEXS / PIPE FITTING / 3/8NPT-M STL From 8-9294	1	1	1	1	
84	501304	PLUG SQUARE HEAD / PIPE FITTING / 1/4NPT-M BR	1	1	1	1	
85	061025	SUPPORT	1	1	1	1	
88	502719	SCREW CAP HEX M10-1.5x20 SS EMN	1	1	1	1	
89	5001427	SCREW CAP HEX 7/16-14x1 3/8 G5 Z050	12	12	12	12	A
NS	500853	WASHER LO EXT .437x.760x.036 Z050	12	12	12	12	A
90	071170	HOSE ASSY / #4 24"	1	1	1	1	
. A	071167	. FEMALE CONNECTOR / HOSE BARB @ METRIC / #4x M10-1.5-F BR	1	1	1	1	
. B	071166	. MALE CONNECTOR / HOSE BARB @ METRIC / #4x M10-1.5-M BR	1	1	1	1	
91	060840	SUPPORT HARNESS	1	1	1	1	
92	504601	CLAMP / 5/16" I.D. x .375 HOLE	1	1	1	1	

From 4-8165 To 8-9339		Date:07/2024	PAGE:Y2-0750-01

AUTOMATIC TRANSMISSION - "WORLD" WITH DETROIT S-60

Item#	Part	Description	XLII 45	XLII MTH40	XLII MTH45	XLII MTH45E	NOTES
93	571763	BREATHER	1	1	1	1	
94	952627	CLAMP / 1/2" I.D.	1	1	1	1	
95	502862	SCREW CAP HEX M8-1.25x20 G8.8 N500	1	1	1	1	
96	500942	WASHER LO SPT 8.1x14.8x2.0 N500	1	1	1	1	
97	071166	MALE CONNECTOR / HOSE BARB @ METRIC / #4x M10-1.5-M BR	1	1	1	1	
97	071497	MALE CONNECTOR / SAE 45º @ METRIC / #4FL-Mx M10-1.5 M BR	1	1	1	1	
98	504601	CLAMP / 5/16" I.D. x .375 HOLE	1	1	1	1	
100	071392	SUPPORT / TUBE DIPSTICK / ANGLE W/STUD To 8-9276	1	1	1	1	
101	071363	SUPPORT / TUBE DIPSTICK / "U" SHAPE 132MM To 8-9276	1	1	1	1	
102	500574	SCREW MA TR PH #10-24x1 1/4 SS To 8-9276	1	1	1	1	
103	500470	WASHER LO SPT .193x.334x.047 Z050 To 8-9276	1	1	1	1	
104	500786	NUT HEX #10-24 Z050 To 8-9276	1	1	1	1	
105	952635	CLAMP / 1" I.D. To 8-9276	1	1	1	1	
110	N.S.P.	SUPPORT REAR / (29507888) To 4-8345	1	1	1	1	2
110	070964	SUPPORT REAR To 4-8345	1	1	1	1	
111	070950	GUIDE REAR To 4-8345	1	1	1	1	
112	630118	RUBBER BUMPPER To 4-8345	1	1	1	1	
113	550642	WASHER To 4-8345	1	1	1	1	
114	500106	SCREW CAP HEX 1/2-20x6 G5 PT Z050 To 4-8345	1	1	1	1	
115	500718	NUT HEX STO 1/2-20 Z050	1	1	1	1	
116	500958	WASHER FL .531x1.062x.095 SS	1	1	1	1	
120	502830	SCREW CAP HEX M6-1.0x20 G8.8 N500	AR	AR	AR	AR	
121	500877	WASHER FL .250x.562x.065 N500	AR	AR	AR	AR	
122	952635	CLAMP / 1" I.D.	AR	AR	AR	AR	
131	**Y2-0150-00**	**ENGINE CRADLE - WITH DETROIT S-60**					
133	071259	SUPPORT, HOSE From 3-7976 To 4-8345	1	1	1	1	
134	071260	SUPPORT, HOSE From 3-7976 To 4-8345	1	1	1	1	
135	070884	SUPPORT "Z" SHAPE To 4-8345	1	1	1	1	
136	052560	SUPPORT, COOLANT FILTER From 4-8268	1	1	1	1	
NS	683904	TESTING FOR GLYCOL CONTAMINATION IN TRANSMISSION OIL	1	1	1	1	
. NS	IS-99901A	. SEE INSTRUCTION SHEET	1	1	1	1	
200	571709	TRANSMISSION FILTER / MAINTENANCE KIT	1	1	1	1	
200	572050	TRANSMISSION FILTER / MAINTENANCE KIT	AR	AR	AR	AR	
. NS	571692	. O-RING / (LARGE SQUARE CUT)	2	2	2	2	
. NS	571693	. O-RING / (SMALL)	2	2	2	2	
. NS	571694	. O-RING / DRAIN PLUG	2	2	2	2	
. NS	571695	. DRAIN PLUG ASSY W/O-RING	1	1	1	1	
201	N.S.S.	. FILTER	2	2	2	2	1
202	571692	. O-RING / (LARGE SQUARE CUT)	2	2	2	2	
203	571693	. O-RING / (SMALL)	2	2	2	2	

From 4-8165 To 8-9339		Date:07/2024	PAGE:Y2-0750-01

AUTOMATIC TRANSMISSION - "WORLD" WITH DETROIT S-60

Item#	Part	Description	XLII 45	XLII MTH40	XLII MTH45	XLII MTH45E	NOTES
204	571694	. O-RING / DRAIN PLUG	2	2	2	2	
205	571695	DRAIN PLUG ASSY W/O-RING	1	1	1	1	
NS	071249	DECAL "TranSynd OIL ONLY" / ENGLISH & FRANCAIS	1	1	1	1	
NS	071364	DECAL "TranSynd OIL ONLY" / ENGLISH & SPANISH	1	1	1	1	
NS	684016	OIL TRANSYND TRANSMISSION "WORLD"	1	1	1	1	
206	N.S.P.	COVER FILTER / (29507434)	2	2	2	2	2
207	N.S.P.	BOLT M10-1.5 x 55M / (2954186)	AR	AR	AR	AR	2
208	N.S.P.	YOKE (1810) HALF ROUND(29511516/6.5-4-4521-1)	1	1	1	1	2
208	N.S.P.	STRAP LOCK PLATE	1	1	1	1	2
208	N.S.P.	BOLT M10-1.5 X 30MM GR 10.9	2	2	2	2	2
208	N.S.P.	SEAL OUTPUT / (29515621)	1	1	1	1	2
209	N.P.N.	BOLT M10-1.5 X 30MM GR10.9	1	1	1	1	4
		A) TO FIX TRANSMISSION TO ENGINE					
		B) PRODUCT IMPROVEMENT CORRODING HOSE FITTING, CHANGE FOR HOSE # 079023 WITH 1 FITTING # 501523					
		C) PRODUCT IMPROVEMENT CORRODING HOSE CHANGE FOR HOSE # 079024 WITH 1 FITTING # 501523					
		O) WITHOUT RETARDER					
		R) WITH RETARDER					
		S) AS SHOWN					
		1) NOT SOLD SEPARATELY					
		2) NOT SOLD BY PREVOST (SEE MANUFACTURING PART NUMBER AT END OF DESCRIPTION LINE)					
		4) NO PARTS NUMBER					

From Y-7046 To 8-9339		Date:07/2024	PAGE:Y2-0755-15
SHIFTER ELECTRONIC - "WORLD" TRANSMISSION			

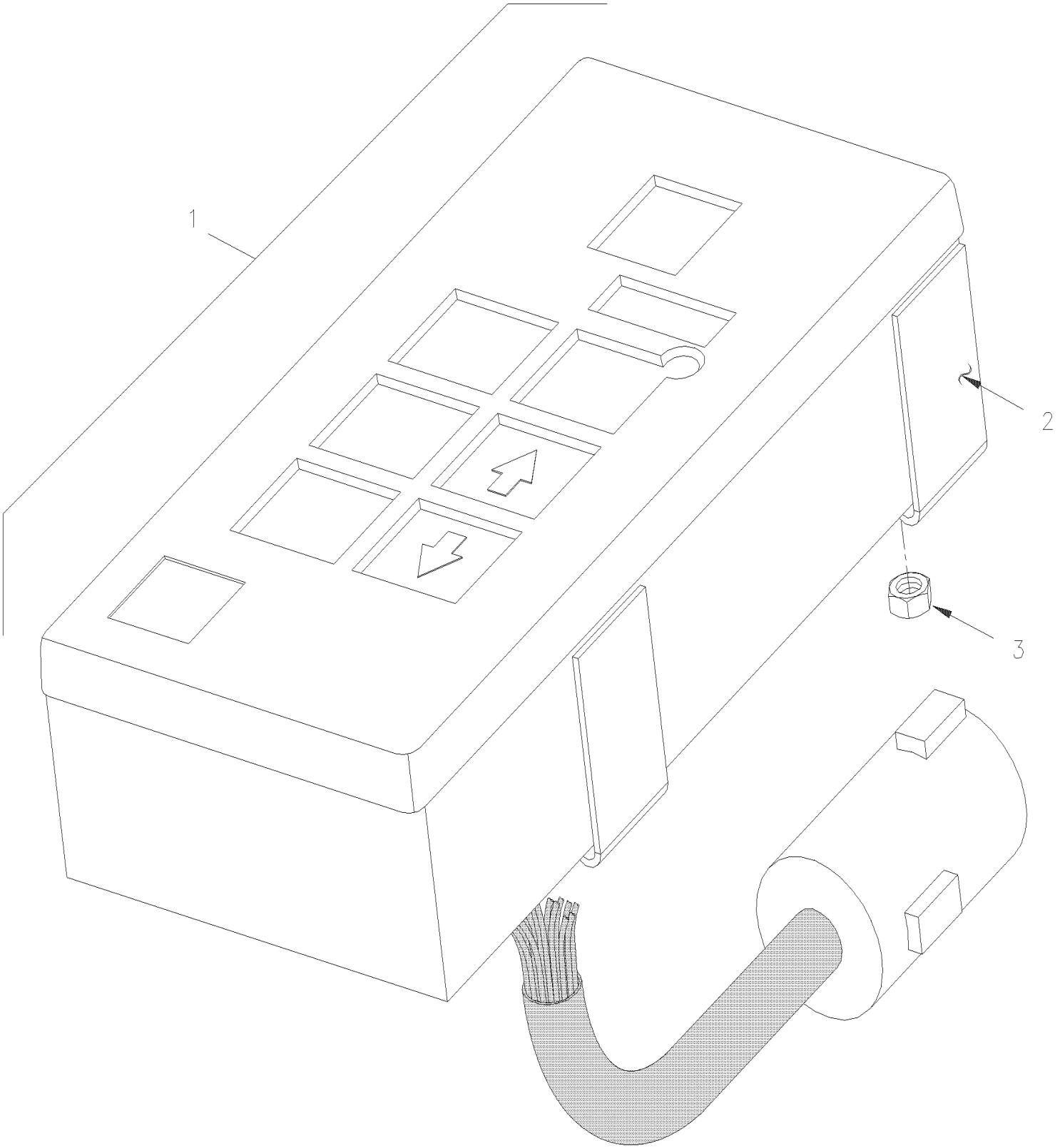

From Y-7046 To 8-9339		Date:07/2024	PAGE:Y2-0755-15

SHIFTER ELECTRONIC - "WORLD" TRANSMISSION

Item#	Part	Description	XLII 45	XLII MTH40	XLII MTH45	XLII MTH45E	NOTES
1	571718	SHIFTER, SELECTOR "WORLD" / WTEC III To 7-9000	1	1	1	1	
1	572031	SHIFTER, SELECTOR "WORLD" / GEN IV From 7-9001			1	1	
2	N.S.P.	. BRACKET	2	2	2	2	2
3	500423	. NUT HEX NYRT #10-32 SS	4	4	4	4	
		2) NOT SOLD BY PREVOST (SEE MANUFACTURING PART NUMBER AT END OF DESCRIPTION LINE)					

From Y-7046 To 8-9339		Date:07/2024	PAGE:Y2-0760-00
RETARDER SELECTOR SWITCH - "WORLD"			

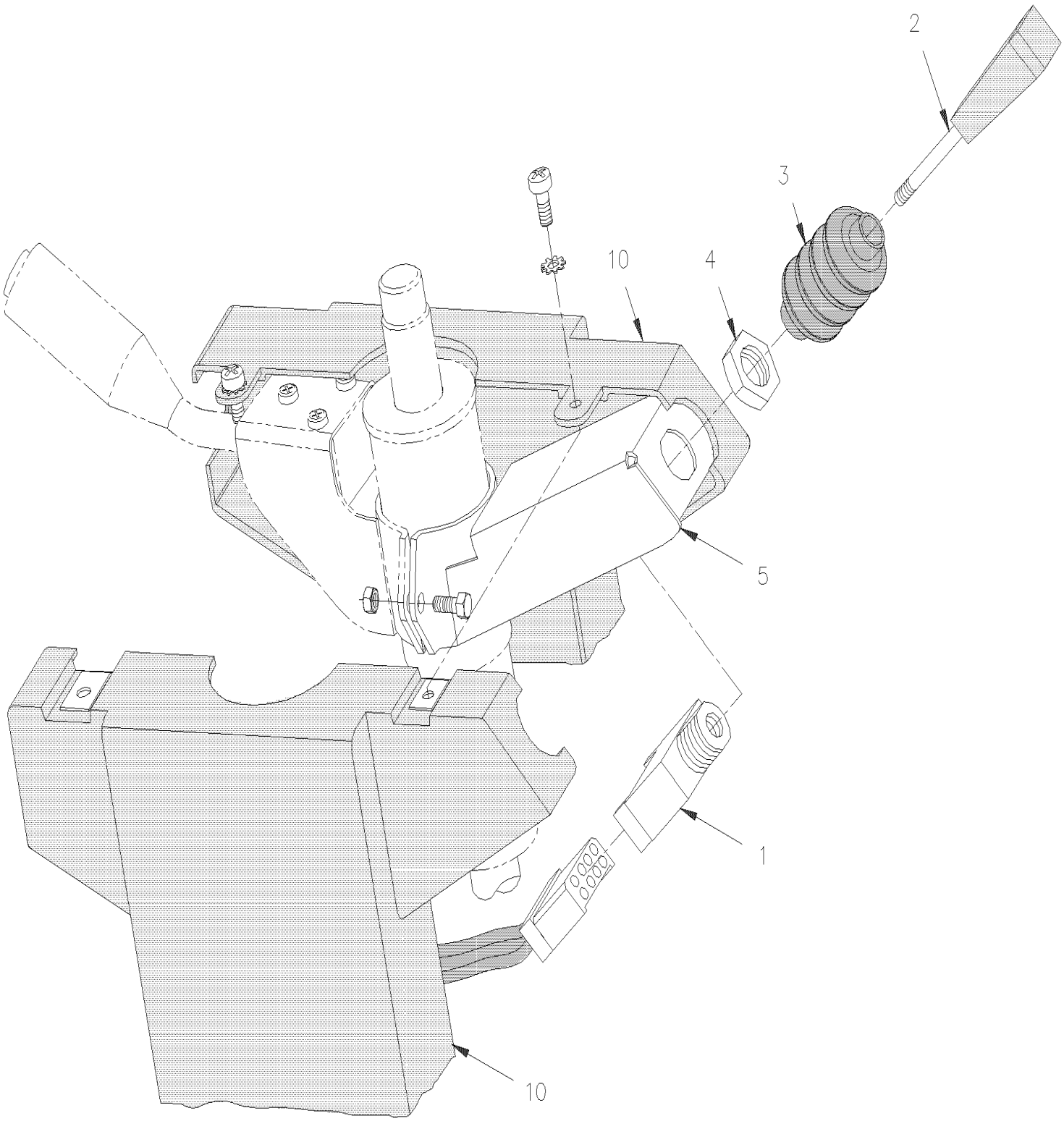

From Y-7046 To 8-9339		Date:07/2024	PAGE:Y2-0760-00

RETARDER SELECTOR SWITCH - "WORLD"

Item#	Part	Description	XLII 45	XLII MTH40	XLII MTH45	XLII MTH45E	NOTES
1	562356	SWITCH ASSY / W/LEVER & BOOT / 6 POSITIONS	1	1	1	1	
2	N.S.S.	. LEVER	1	1	1	1	1
3	N.S.S.	. BOOT	1	1	1	1	1
4	N.S.S.	. NUT JAM	1	1	1	1	1
5	N.P.N.	SUPPORT CONTROL SWITCH	1	1	1	1	4
10	**Y2-1407-00**	**STEERING COLUMN & COVER - INSTALLATION**					
		1) NOT SOLD SEPARATELY					
		4) NO PARTS NUMBER					

		Date:07/2024	Y2-09
PROPELLER SHAFT			

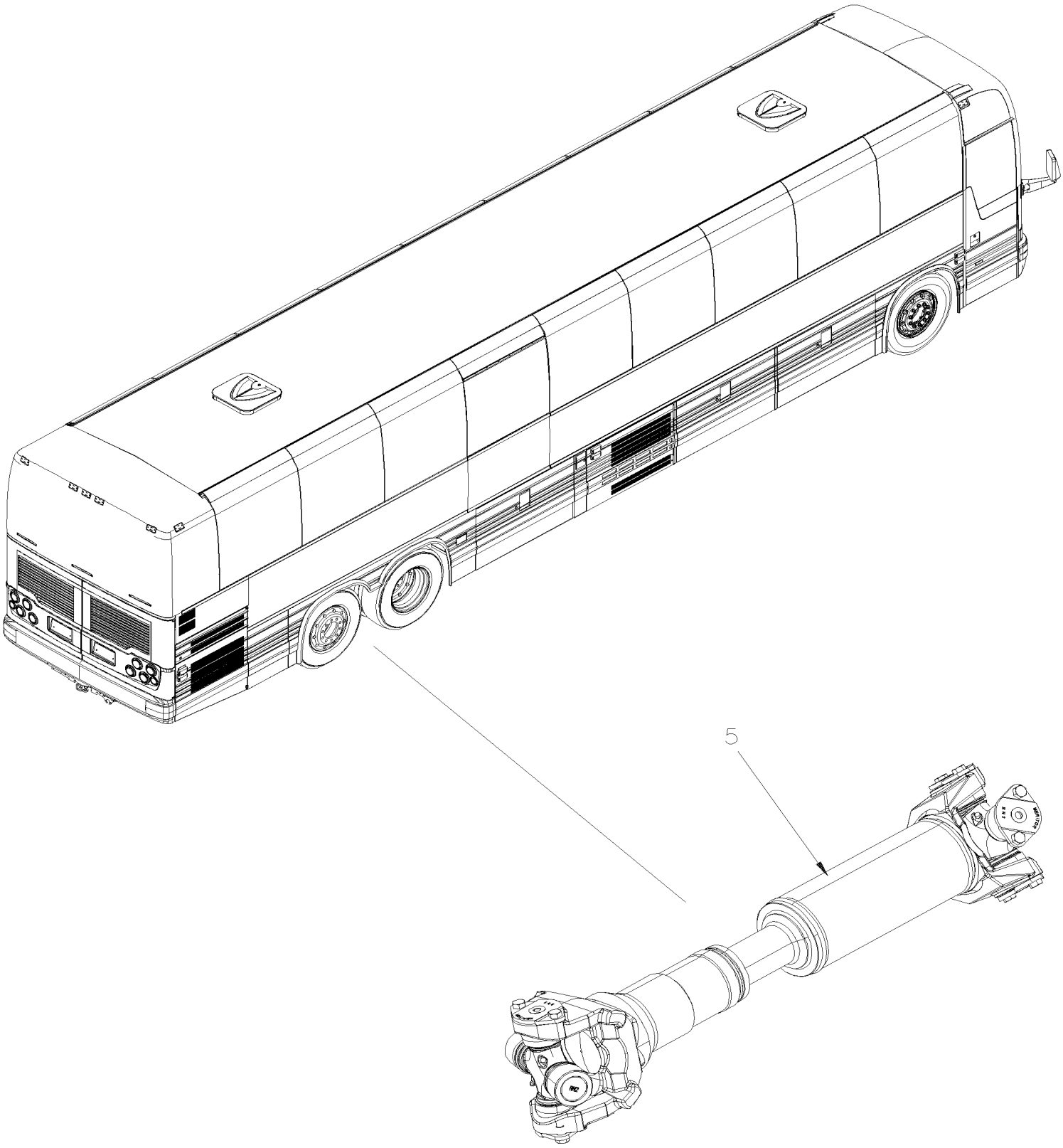

		Date:07/2024	Y2-09

PROPELLER SHAFT

Item#	Part	Description	XLII 45	XLII MTH40	XLII MTH45	XLII MTH45E	NOTES
5	Y2-0905-00	PROPELLER SHAFT From Y-7046 To 8-9339					

From Y-7046 To 8-9339		Date:07/2024	PAGE:Y2-0905-00
PROPELLER SHAFT			

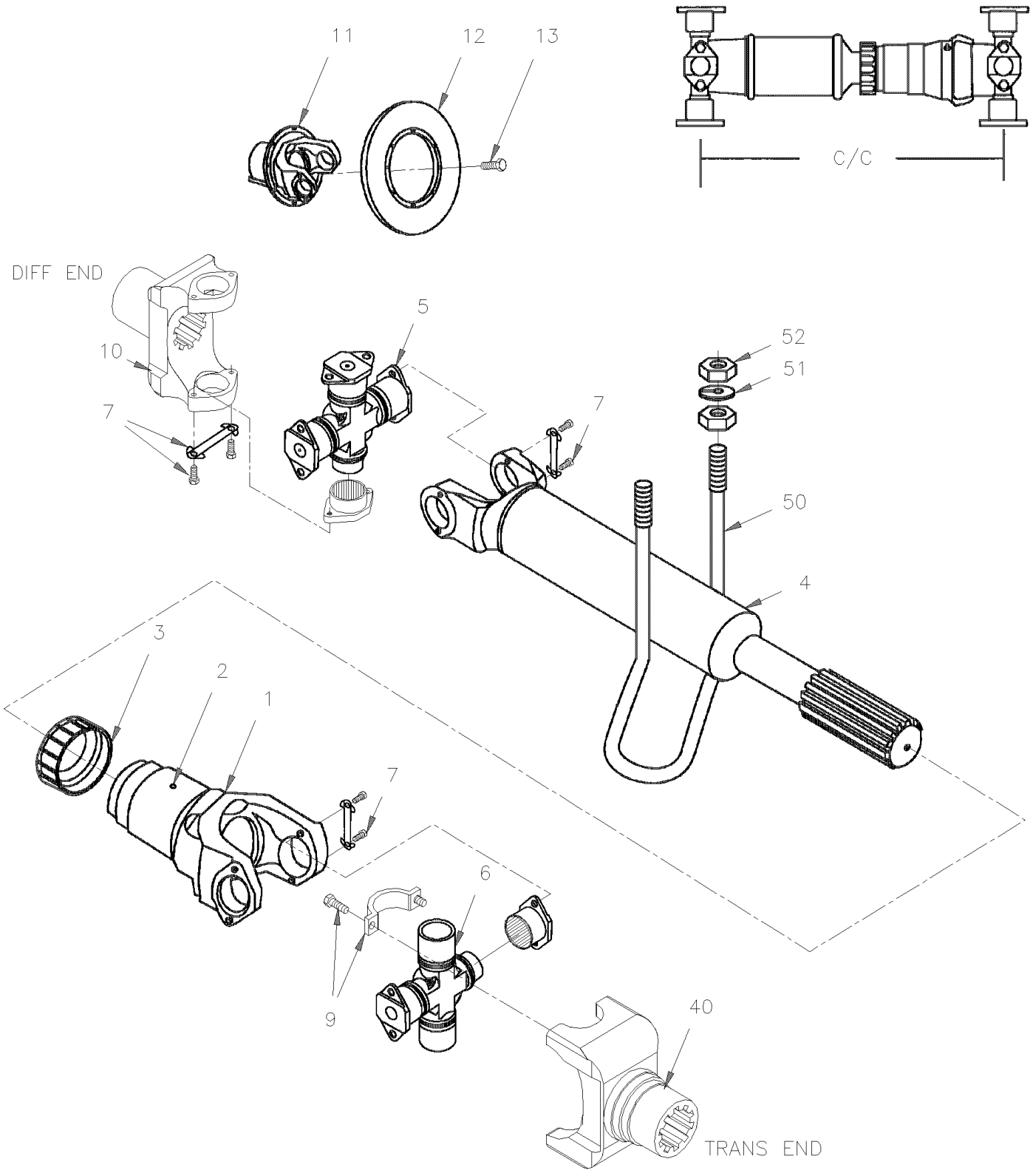

From Y-7046 To 8-9339		Date:07/2024	PAGE:Y2-0905-00

PROPELLER SHAFT

Item#	Part	Description	XLII 45	XLII MTH40	XLII MTH45	XLII MTH45E	NOTES
		MESURE FROM C/C OF BEARING CAP					
		W/MINIMUM COLLAPSED					
		PROPELLER SHAFT SERIES 1810					
		USED WITH SERIES 60 ENGINE					
NS	580070	SHAFT ASSY 39" C/C	1		1		
	580075	SHAFT ASSY 14" C/C To 7-9095		1		1	
	580083	SHAFT ASSY 17.937" C/C From 7-9096				1	
	580080	SHAFT ASSY 33" C/C W/MANUAL TRANSMISSION	1				Z M
1	580065	. SLIP YOKE	1		1		A
. NS	580078	. . WELSH PLUG / PLASTIC BLUE 3 1/4" O.D. THIN	1		1		A
1	580066	. SLIP YOKE		1		1	B
. NS	580084	. . WELSH PLUG / PLASTIC BLUE 3 1/4" O.D. DEEP		1		1	B
2	501491	. . GREASE FITTING / 1/8 NPTx3/4"	1	1	1	1	
3	580052	. DUST CAP KIT / W/1800 SERIES	1	1	1	1	
5	580043	. KIT, CROSS & BEARING / W/1800 FULL ROUND		1		1	
5	580043	. KIT, CROSS & BEARING / W/1800 FULL ROUND	1		1		
6	580062	. KIT, CROSS & BEARING / W/1800 HALF ROUND	1	1	1	1	
NS	580067	. . BEARING END (1810) W/QUICK DISCONECT	2	2	2	2	
7	580071	. . SCREW CAP HEX 3/8-24 x 5/8 G8	4	4	4	4	
9	580063	KIT STRAP & BOLT	2	2	2	2	
. NS	N8893184	. SCREW CB 12POINT (SET OF 4) 1/2-20 x 1" G8	4	4	4	4	
		NEXT FOLLOWING YOKE ARE PARTS OF					
		REAR AXLE					
10	621403	YOKE (1810) FULL ROUND (46 SPL)	1	1	1	1	
. NS	621501	. DEFLECTOR, OIL	1	1	1	1	
. NS	621492	. SPEEDY SLEEVE 3.250" I.D. / TO REPAIR OIL LEAK ON YOKE	1	1	1	1	
11	621507	YOKE (1810) FULL ROUND (46 SPL) W/FLYWHEEL ADAPTOR ONE PIECE	1				
. NS	621492	. SPEEDY SLEEVE 3.250" I.D. / TO REPAIR OIL LEAK ON YOKE	1				
12	121242	FLYWHEEL	1				
13	500074	SCREW CAP HEX 7/16-20x2 G5 Z050	8				
13	500714	NUT HEX STO 7/16-20 Z050	8				
		FOLLOWING YOKE ARE PARTS OF					
		AUTOMATIC TRANSMISSION					
40	N.S.P.	YOKE (1810) HALF ROUND / W/"WORLD" TRANS (29511516)	1	1	1	1	2
40	571989	YOKE (1810) HALF ROUND / "ZF" TRANS	1				Z

From Y-7046 To 8-9339		Date:07/2024	PAGE:Y2-0905-00

PROPELLER SHAFT

Item#	Part	Description	XLII 45	XLII MTH40	XLII MTH45	XLII MTH45E	NOTES
50	121440	PROTECTOR GUARD PROPELLER SHAFT 424MM x 140MM	1	1	1	1	
51	500488	WASHER LO SPT .760x1.271x.188 Z050	2	2	2	2	
52	500733	NUT HEX 3/4-16 Z050	2	2	2	2	
		A) WITH SHAFT ASSY #580070 & 580080					
		B) WITH SHAFT ASSY #580075					
		M) WITH MANUAL TRANSMISSON "EATON"					
		Z) WITH "ZF" TRANSMISSION					
		2) NOT SOLD BY PREVOST (SEE MANUFACTURING PART NUMBER AT END OF DESCRIPTION LINE)					

		Date:07/2024	Y2-10
FRONT AXLE			

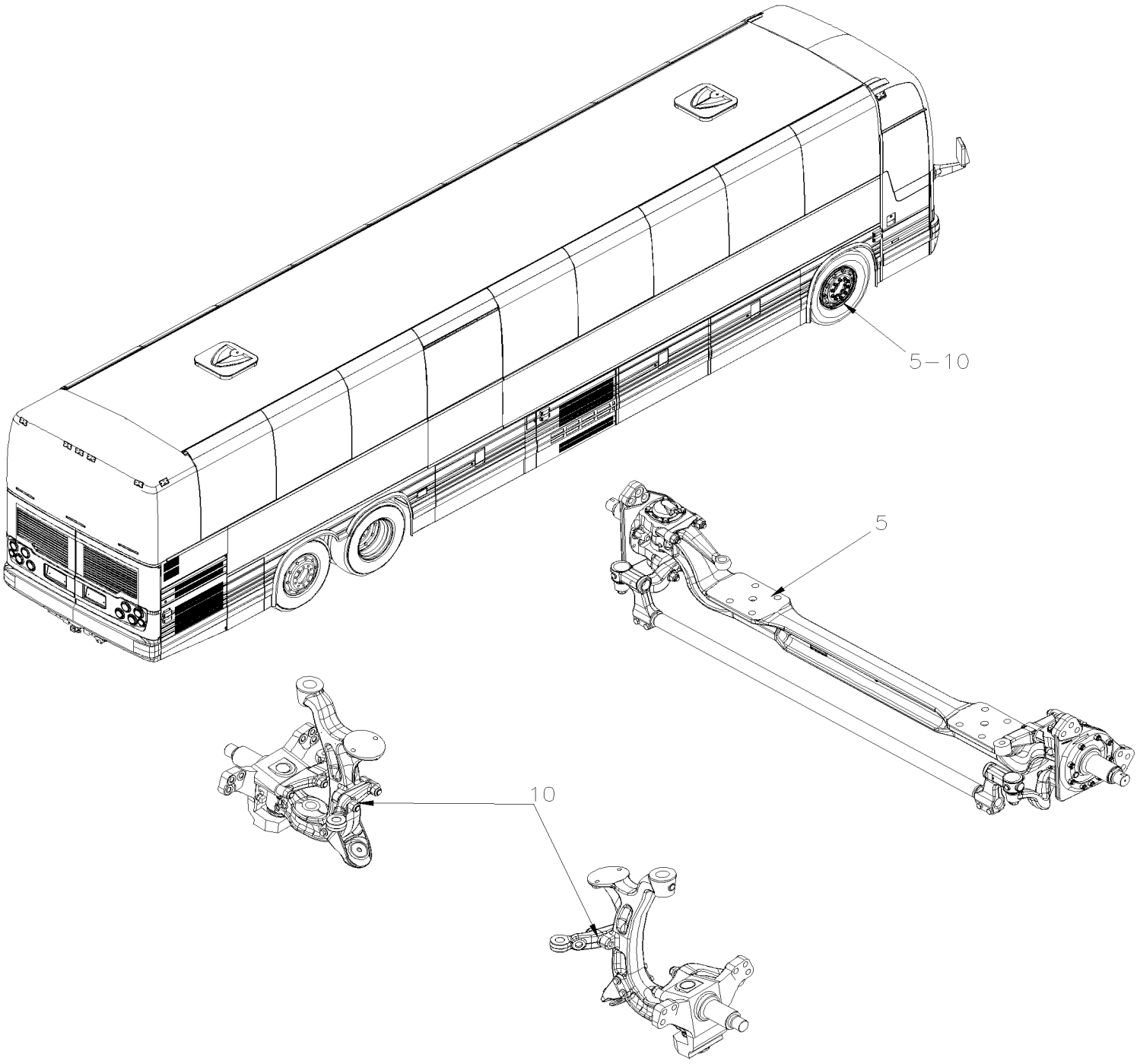

		Date:07/2024	Y2-10

FRONT AXLE

Item#	Part	Description	XLII 45	XLII MTH40	XLII MTH45	XLII MTH45E	NOTES
5	Y2-1005-00	FRONT AXLE - I BEAM RIGID MODEL "S-84" From Y-7046 To 3-8164					
5	Y2-1005-01	FRONT AXLE - I BEAM RIGID MODEL "NSD80" From 1-7455 To 1-7455					
5	Y2-1005-02	FRONT AXLE - I BEAM RIGID MODEL "S84U" From 4-8165 To 6-8906					
10	Y2-1005-50	FRONT AXLE - INDEPENDENT MODEL "IS-84" / 16500LBS From Y-7046 To 3-8164					
10	Y2-1005-51	FRONT AXLE - INDEPENDENT MODEL "NDIFS80P" / 18000LBS From 4-8165 To 8-9339					

From Y-7046 To 3-8164		Date:07/2024	PAGE:Y2-1005-00
FRONT AXLE - I BEAM RIGID MODEL "S-84"			

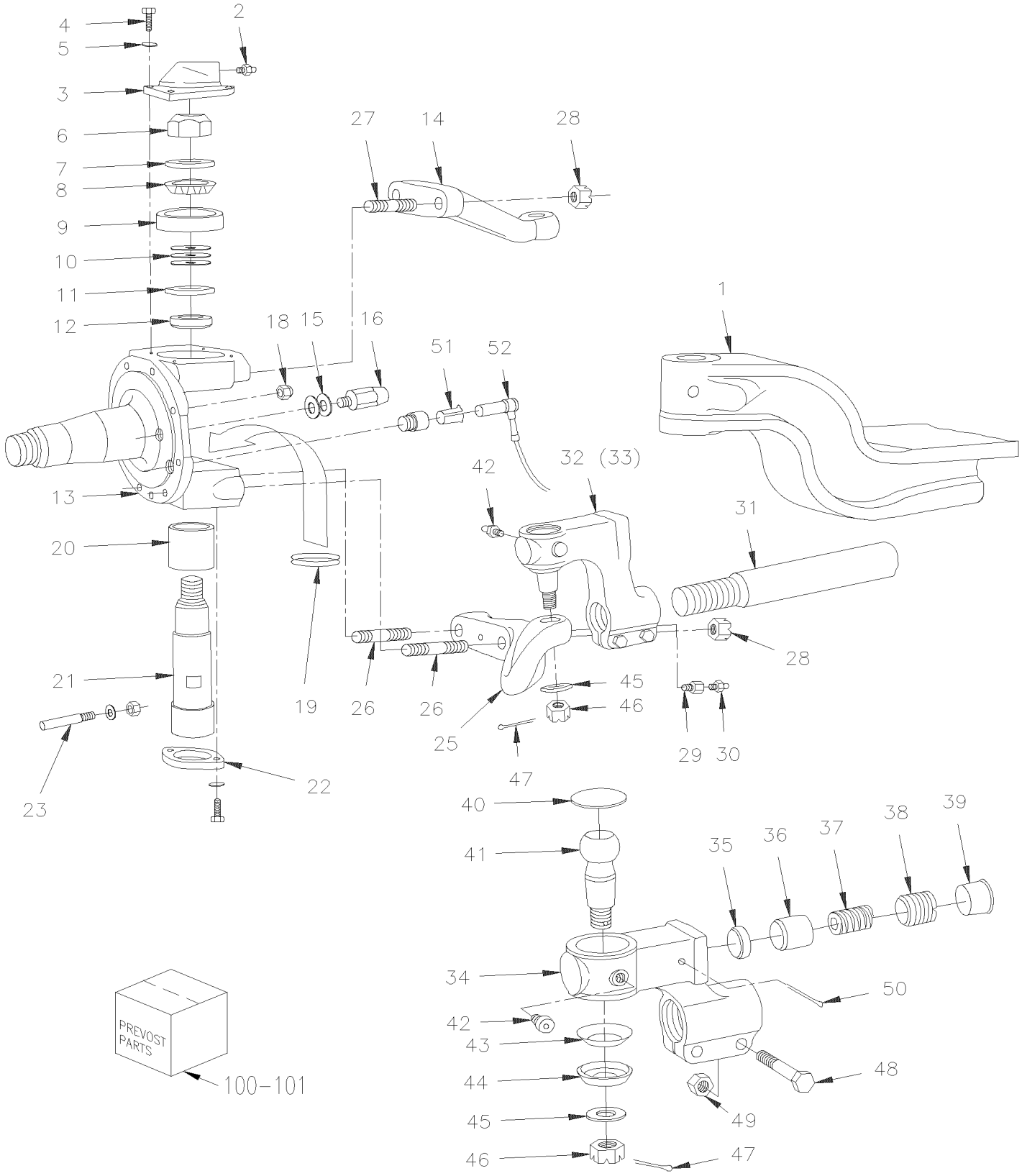

From Y-7046 To 3-8164		Date:07/2024	PAGE:Y2-1005-00

FRONT AXLE - I BEAM RIGID MODEL "S-84"

Item#	Part	Description	XLII 45	XLII MTH40	XLII MTH45	XLII MTH45E	NOTES
	611231	AXLE ASSY W/ABS To Y-7146	1				
	611453	AXLE ASSY W/ABS From Y-7147 To Y-7338	1				
	611460	AXLE ASSY W/ABS From Y-7339 To 2-7766	1				
	611256	AXLE ASSY W/ABS From 2-7767	1				
1	611151	. AXLE BEAM To Y-7146	1				
1	611454	. AXLE BEAM From Y-7147	1				
2	501491	. GREASE FITTING / 1/8 NPTx3/4"	2				
NS	504615	. PROTECTOR CAP / BLACK / .313 I.D. x .500	2				
3	611008	. CAP COVER	2				
4	500067	. SCREW CAP HEX 7/16-20x1 G5 Z050	4				
4	680404	. . CAP PLUG	1				
5	500447	. WASHER FL .562x1.375x.109 ZP	4				
6	611153	. NUT HEX STO 1 3/8"-12	2				
7	611010	. WASHER 38.23x69.85x7	2				
8	611011	. CONE BEARING	2				
9	611012	. CUP BEARING	2				
10	611017	. WASHER SHIM / .015"	AR				
10	611016	. WASHER SHIM / .010"	AR				
10	611015	. WASHER SHIM / .008"	AR				
10	611014	. WASHER SHIM / .006"	AR				
10	611013	. WASHER SHIM / .005"	AR				
11	611145	. OIL SEAL	2				
12	611154	. SLEEVE	2				
13	611147	. KNUCKLE R.H.	1				
13	611146	. KNUCKLE L.H.	1				
13	611289	KNUCKLE L.H. STREET SIDE	1				R
13	611290	KNUCKLE R.H. CURBSIDE	1				R
14	611031	. STEERING ARM UPPER L.H. STREET SIDE	1				
14	161033	. STEERING ARM UPPER R.H. CURBSIDE	1				
15	611042	. WASHER SHIM / 1/32" TH	AR				
15	611041	. WASHER SHIM / 1/16" TH	AR				
15	611040	. WASHER SHIM / 1/8" TH	AR				
16	611159	. SWIVEL STOP SCREW / REAR / 38MM	2				
NS	611149	. SWIVEL STOP SCREW / FRONT / 48MM	1				
NS	611150	. SWIVEL STOP SCREW / FRONT / 60MM	1				
18	5007001	. NUT HEX STO 1/2-20 Z050 G "C"	16				
19	611020	. V-SEAL	2				
NS	611152	. SEAL RING	2				
20	611144	. BUSHING LOWER KING PIN	2				
21	611148	. KING PIN	2				
22	611155	. CAP LOWER / KING PIN	2				
NS	611156	. O-RING	2				

From Y-7046 To 3-8164		Date:07/2024	PAGE:Y2-1005-00

FRONT AXLE - I BEAM RIGID MODEL "S-84"

Item#	Part	Description	XLII 45	XLII MTH40	XLII MTH45	XLII MTH45E	NOTES
22	612364	. SCREW 3/8-24	4				
22	612363	. WASHER	4				
23	611258	. SWIVEL PIN LOCK	2				
25	611032	. STEERING ARM LOWER L.H. STREET SIDE	1				
NS	611033	. STEERING ARM LOWER R.H. CURBSIDE	1				
26	611028	. STUD / STREET SIDE / 3/4-16 X 3"	2				
26	611029	. STUD / TO FIX LOWER ARM 3/4-16 X 3 5/8"	2				
27	611027	. STUD / TO FIX UPPER ARM 3/4-16 X 2 3/4"	4				
28	5001196	. NUT HEX SLT 3/4-16	8				
29	611062	. ADAPTER / BSP FITTING / 1/8BSP-Mx1/8NPT-F	2				
30	501493	. GREASE FITTING 45º / 1/8 NPT	2				
NS	504615	. PROTECTOR CAP / BLACK / .313 I.D. x .500	2				
31	611026	. TIE ROD	1				
32	611024	. TIE ROD ASSY / 5" OFFSET / R.H. THREAD M48-2 CURB SIDE	1				
33	611025	. TIE ROD ASSY / 5" OFFSET / L.H. THREAD M48-2 STREET SIDE	1				
34	N.S.S.	. . HOUSING / OFFSET L.H. THREAD	1				1
34	N.S.S.	. . HOUSING / OFFSET R.H. THREAD	1				1
35	N.S.P.	. . RUBBING PAD / (7157/156)	1				2
36	N.S.P.	. . THRUST CUP / (7157/153)	1				2
37	N.S.P.	. . COMPRESSION SPRING / (5443/4)	1				2
38	N.S.P.	. . ADJUSTER PIECE / (5443/154)	1				2
39	680404	. . CAP PLUG	1				
40	N.S.P.	. . PLUG / (5247/155)	1				2
40	N.S.P.	. . SNAP RING / (ML7544/55N)	1				2
41	N.S.P.	. . BALL STUD / (F4223/11)	1				2
42	501495	. . GREASE FITTING 90º / 1/8 NPT	2				
43	611056	. . DIRT SEAL PRESSING	1				
44	611057	. . RUBBER SEAL BOOT	1				
45	500420	. . WASHER FL .938x1.750x.134 ZP	1				
46	5001196	. . NUT HEX SLT 3/4-16	1				
47	502111	. . PIN, COTTER 1/8 x 1 1/2 SS	1				
48	5001861	. . SCREW CAP HEX M12-1.75x60 G10.9 N500	2				
49	500811	. . NUT HEX STO M12-1.75 G500	2				
50	502115	. . PIN, COTTER 3/16 x 2 1/2	1				
51	641096	. CLIP, SPRING / TO FIX SENSOR	2				
52	641288	. SENSOR ABS (ON FRONT AXLE) 90° ANGLE	2				
100	611162	KIT REPAIR / STEERING KNUCKLE BUSHING (PARALLEL) / (REQUIRES 2 KITS)	AR				B
. NS	611008	. CAP COVER	1				B
. NS	611153	. NUT HEX STO 1 3/8"-12	1				B
. NS	611010	. WASHER 38.23x69.85x7	1				B
. NS	611011	. CONE BEARING	1				B

From Y-7046 To 3-8164		Date:07/2024	PAGE:Y2-1005-00

FRONT AXLE - I BEAM RIGID MODEL "S-84"

Item#	Part	Description	XLII 45	XLII MTH40	XLII MTH45	XLII MTH45E	NOTES
. NS	611012	. CUP BEARING	1				B
. NS	611017	. WASHER SHIM / .015"	4				B
. NS	611016	. WASHER SHIM / .010"	4				B
. NS	611015	. WASHER SHIM / .008"	2				B
. NS	611014	. WASHER SHIM / .006"	2				B
. NS	611013	. WASHER SHIM / .005"	2				B
. NS	611145	. OIL SEAL	1				B
. NS	611154	. SLEEVE	1				B
. NS	611294	. V-SEAL	1				B
. NS	611144	. BUSHING LOWER KING PIN	1				B
. NS	611148	. KING PIN	1				B
. NS	611155	. CAP LOWER / KING PIN	1				B
. NS	611156	. O-RING	1				B
. NS	611258	. SWIVEL PIN LOCK	1				B
. NS	610029	. NUT 7/16 UNF	1				B
. NS	5001200	. WASHER FL .453x.875x.090	1				B
101	611101	KIT REPAIR / TIE ROD END	2				A
102	IS18091	TIE ROD 610052 FIRST INSTALLATION INSTRUCTIONS	1				
. NS	610052	. TIE ROD ASSY	1				
. NS	610051	. NUT HEX SLO / SINGLE USE M24-1.5	2				
. NS	IS-18091	. SEE INSTRUCTION SHEET	1				
. NS	FI-18091	. VOIR FEUILLE D'INSTRUCTION	1				
		A) INCLUDING ITEMS #35 TO 50					
		B) INCLUDING ITEMS # 3 TO 12, 19 TO 23					
		R) USE ONLY WITH RETROFIT HUB "UNITISED" BEARING # 611328 (PAGE Y2-1300-99)					
		1) NOT SOLD SEPARATELY					
		2) NOT SOLD BY PREVOST (SEE MANUFACTURING PART NUMBER AT END OF DESCRIPTION LINE)					

From 1-7455 To 1-7455		Date:07/2024	PAGE:Y2-1005-01
FRONT AXLE - I BEAM RIGID MODEL "NSD80"			

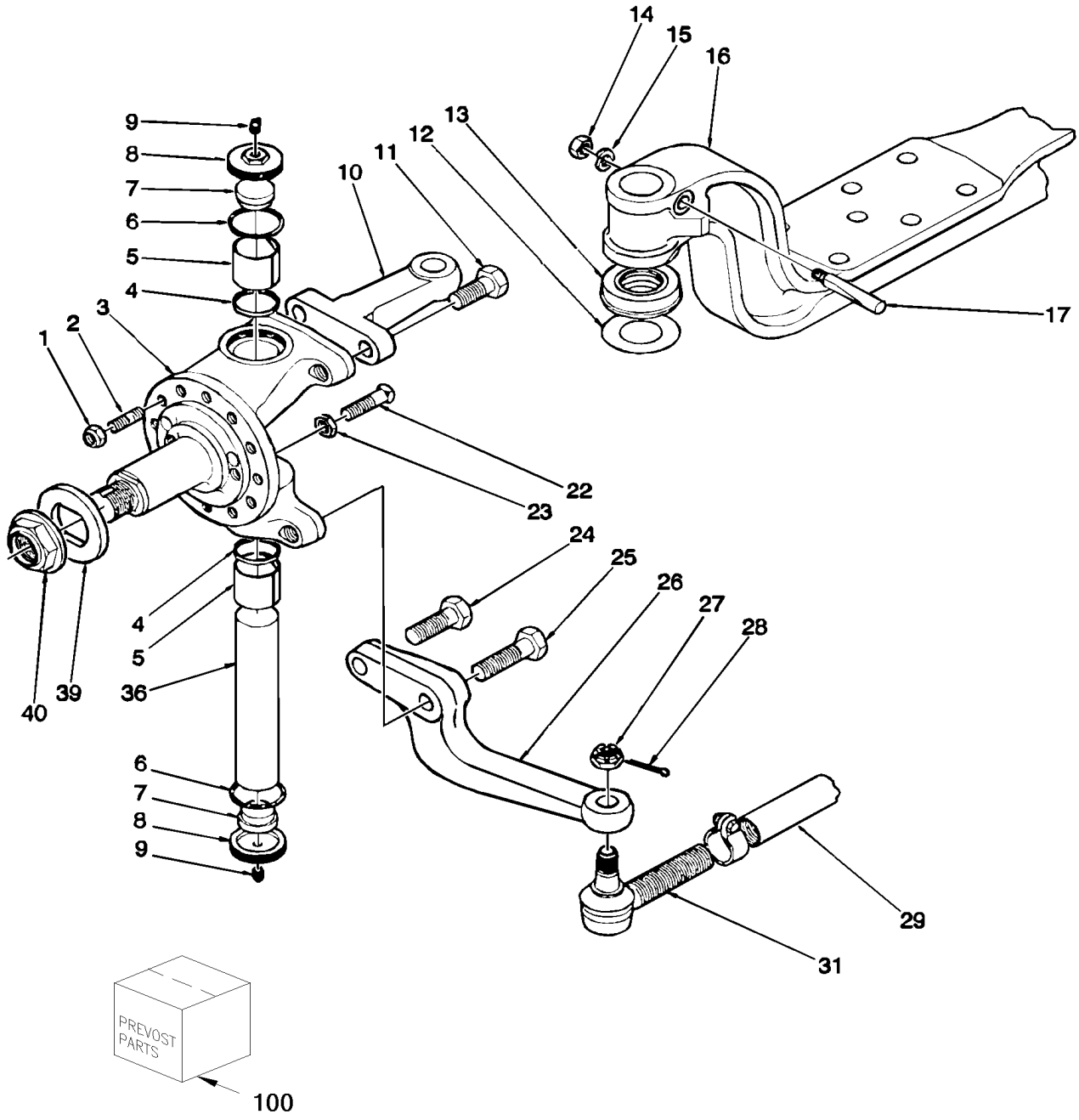

From 1-7455 To 1-7455		Date:07/2024	PAGE:Y2-1005-01

FRONT AXLE - I BEAM RIGID MODEL "NSD80"

Item#	Part	Description	XLII 45	XLII MTH40	XLII MTH45	XLII MTH45E	NOTES
	611466	AXLE ASSY / MODEL "NSD80"	1				
1	5007001	NUT HEX STO 1/2-20 Z050 G "C"	10				
2	611030	STUD 1/2-20 X 1 11/16"	10				
3	611935	KNUCKEL L.H. & R.H.	2				
4	611936	OIL SEAL	2				
5	611937	BUSHING (STD)	2				
6	611938	O-RING	2				
7	611939	FOAM INSERT	2				
8	611940	CAP	2				
9	501490	GREASE FITTING / 1/8 NPT	2				
10	N.S.P.	TOP STEERING LEVER / F4872/9	1				2
11	N.P.N.	SCREW CAP HEX DP M14X50 G10.9 PT	2				4
11	5001328	SCREW CAP HEX M14-2.0x90 G10.9 DP	2				
12	611956	SHIM 0.013	1				
12	611957	SHIM 0.025	1				
12	611958	SHIM 0.050	1				
12	611959	SHIM 0.020	1				
13	611941	BEARING THRUST	1				
14	5007001	NUT HEX STO 1/2-20 Z050 G "C"	1				
15	N.P.N.	LOCK WASHER / SL242/6	1				4
16	N.P.N.	AXLE BEAM / F4872/1	1				4
17	611942	PIN COTTER	2				
22	611943	LOCKSTOP SCREW	2				
22	611944	LOCKSTOP SCREW	1				
23	N.P.N.	JAM NUT / SL244/8	3				4
24	N.P.N.	SCREW CAP HEX DP M14X65 G10.9	2				4
25	5001327	SCREW CAP HEX M14-2.0x80 G10.9 DP	2				
26	611945	STEERING ARM LOWER R.H.	1				
26	611946	STEERING ARM LOWER L.H.	1				
27	5001193	SCREW CAP HEX M20-2.5x65 G10.9 ZP	2				
28	502111	PIN, COTTER 1/8 x 1 1/2 SS	2				
29	N.P.N.	ROD / F4560/12	1				4
31	611024	TIE ROD ASSY / 5" OFFSET / R.H. THREAD M48-2 CURB SIDE	1				
31	611025	TIE ROD ASSY / 5" OFFSET / L.H. THREAD M48-2 STREET SIDE	1				
32	501490	GREASE FITTING / 1/8 NPT	2				
36	611947	KING PIN WITH SINGLE LOCK PIN	2				
36	N.P.N.	KEY DRAW	1				4
39	611948	THRUST WASHER	2				
40	611949	HUB NUT 1 3/4-8	2				
100	611962	KIT REPAIR / STEERING KNUCKLE BUSHING (STD) / (REQUIRE 2 KITS)	1				
101	IS18091	TIE ROD 610052 FIRST INSTALLATION INSTRUCTIONS	1				
. NS	610052	. TIE ROD ASSY	1				

From 1-7455 To 1-7455		Date:07/2024	PAGE:Y2-1005-01

FRONT AXLE - I BEAM RIGID MODEL "NSD80"

Item#	Part	Description	XLII 45	XLII MTH40	XLII MTH45	XLII MTH45E	NOTES
. NS	610051	. NUT HEX SLO / SINGLE USE M24-1.5	2				
. NS	IS-18091	. SEE INSTRUCTION SHEET	1				
. NS	FI-18091	. VOIR FEUILLE D'INSTRUCTION	1				
		2) NOT SOLD BY PREVOST (SEE MANUFACTURING PART NUMBER AT END OF DESCRIPTION LINE)					
		4) NO PARTS NUMBER					

From 4-8165 To 6-8906		Date:07/2024	PAGE:Y2-1005-02
FRONT AXLE - I BEAM RIGID MODEL "S84U"			

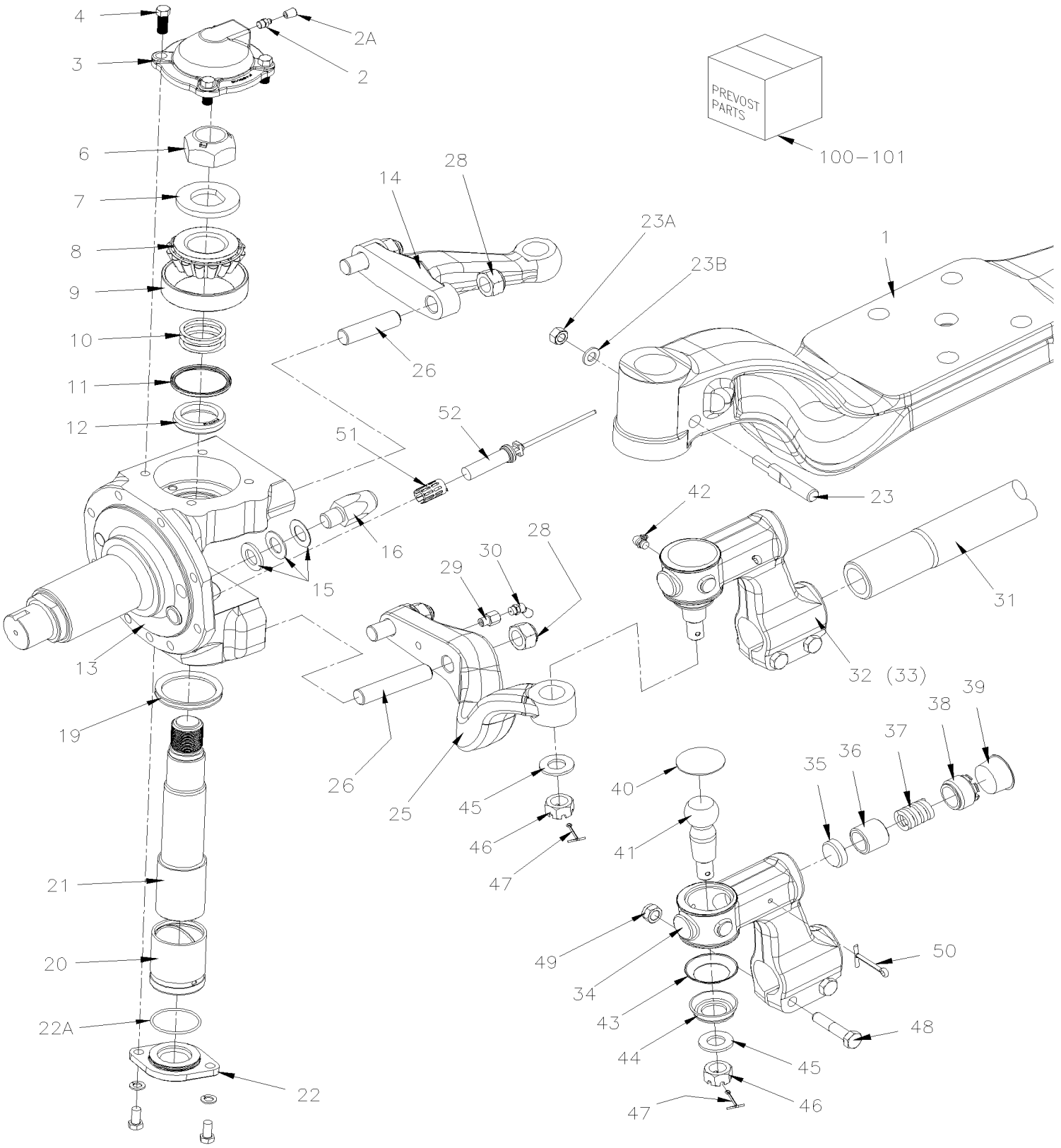

From 4-8165 To 6-8906		Date:07/2024	PAGE:Y2-1005-02

FRONT AXLE - I BEAM RIGID MODEL "S84U"

Item#	Part	Description	XLII 45	XLII MTH40	XLII MTH45	XLII MTH45E	NOTES
	611269	AXLE ASSY W/ABS / MODEL "S84U" W/TYPE 27 BOOSTER To 6-8906	1				
	612350	AXLE ASSY W/ABS / MODEL "S84U" W/TYPE 24 BOOSTER	1				
1	611454	. AXLE BEAM	1				
2	501491	. GREASE FITTING / 1/8 NPTx3/4"	2				
2A	504615	. PROTECTOR CAP / BLACK / .313 I.D. x .500	2				
3	611008	. CAP COVER	2				
4	500067	. SCREW CAP HEX 7/16-20x1 G5 Z050	4				
4	680404	. . CAP PLUG	1				
4	500447	. WASHER FL .562x1.375x.109 ZP	4				
6	611153	. NUT HEX STO 1 3/8"-12	2				
7	611010	. WASHER 38.23x69.85x7	2				
8	611011	. CONE BEARING	2				
9	611012	. CUP BEARING	2				
10	611017	. WASHER SHIM / .015"	AR				
10	611016	. WASHER SHIM / .010"	AR				
10	611015	. WASHER SHIM / .008"	AR				
10	611014	. WASHER SHIM / .006"	AR				
10	611013	. WASHER SHIM / .005"	AR				
11	611145	. OIL SEAL	2				
12	611154	. SLEEVE	2				
13	611290	. KNUCKLE R.H. CURBSIDE	1				
13	611289	. KNUCKLE L.H. STREET SIDE	1				
14	611031	. STEERING ARM UPPER L.H. STREET SIDE	1				
14	161033	. STEERING ARM UPPER R.H. CURBSIDE	1				
15	611042	. WASHER SHIM / 1/32" TH	AR				
15	611041	. WASHER SHIM / 1/16" TH	AR				
15	611040	. WASHER SHIM / 1/8" TH	AR				
16	611170	. SWIVEL STOP SCREW 43MM	2				
NS	611296	. SWIVEL STOP SCREW 54MM	2				
19	611020	. V-SEAL	2				
NS	611152	. SEAL RING	2				
20	611144	. BUSHING LOWER KING PIN	2				
21	611148	. KING PIN	2				
22	611155	. CAP LOWER / KING PIN	2				
22	612364	. SCREW 3/8-24	4				
22	612363	. WASHER	4				
22A	611156	. O-RING	2				
23	611258	. SWIVEL PIN LOCK	2				
23A	610029	. NUT 7/16 UNF	1				
23B	5001200	. WASHER FL .453x.875x.090	1				
25	611032	. STEERING ARM LOWER L.H. STREET SIDE	1				
NS	611033	. STEERING ARM LOWER R.H. CURBSIDE	1				

From 4-8165 To 6-8906		Date:07/2024	PAGE:Y2-1005-02

FRONT AXLE - I BEAM RIGID MODEL "S84U"

Item#	Part	Description	XLII 45	XLII MTH40	XLII MTH45	XLII MTH45E	NOTES
26	611291	. STUD 3/4-16 X 4"	4				
26	611028	. STUD / STREET SIDE / 3/4-16 X 3"	2				
26	611029	. STUD / TO FIX LOWER ARM 3/4-16 X 3 5/8"	2				
28	5001196	. NUT HEX SLT 3/4-16	8				
29	611062	. ADAPTER / BSP FITTING / 1/8BSP-Mx1/8NPT-F	2				
30	501493	. GREASE FITTING 45º / 1/8 NPT	2				
NS	504615	. PROTECTOR CAP / BLACK / .313 I.D. x .500	2				
31	611292	. ROD	1				
32	611024	. TIE ROD ASSY / 5" OFFSET / R.H. THREAD M48-2 CURB SIDE	1				
33	611025	. TIE ROD ASSY / 5" OFFSET / L.H. THREAD M48-2 STREET SIDE	1				
34	N.S.S.	. . HOUSING / OFFSET L.H. THREAD	1				1
34	N.S.S.	. . HOUSING / OFFSET R.H. THREAD	1				1
35	N.S.P.	. . RUBBING PAD / (7157/156)	1				2
36	N.S.P.	. . THRUST CUP / (7157/153)	1				2
37	N.S.P.	. . COMPRESSION SPRING / (5443/4)	1				2
38	N.S.P.	. . ADJUSTER PIECE / (5443/154)	1				2
39	680404	. . CAP PLUG	1				
40	N.S.P.	. . PLUG / (5247/155)	1				2
40	N.S.P.	. . SNAP RING / (ML7544/55N)	1				2
41	N.S.P.	. . BALL STUD / (F4223/11)	1				2
42	501495	. . GREASE FITTING 90º / 1/8 NPT	2				
43	611056	. . DIRT SEAL PRESSING	1				
44	611057	. . RUBBER SEAL BOOT	1				
45	500420	. . WASHER FL .938x1.750x.134 ZP	1				
46	5001196	. . NUT HEX SLT 3/4-16	1				
47	502111	. . PIN, COTTER 1/8 x 1 1/2 SS	1				
48	5001861	. . SCREW CAP HEX M12-1.75x60 G10.9 N500	2				
49	500811	. . NUT HEX STO M12-1.75 G500	2				
50	502115	. . PIN, COTTER 3/16 x 2 1/2	1				
51	641096	. CLIP, SPRING / TO FIX SENSOR	2				
52	641288	. SENSOR ABS (ON FRONT AXLE) 90° ANGLE	2				
100	611966	KIT REPAIR / STEERING KNUCKLE BUSHING (PARALLEL) / (REQUIRES 2 KITS)	AR				B
101	611101	KIT REPAIR / TIE ROD END	2				A
102	IS18091	TIE ROD 610052 FIRST INSTALLATION INSTRUCTIONS	1				
. NS	610052	. TIE ROD ASSY	1				
. NS	610051	. NUT HEX SLO / SINGLE USE M24-1.5	2				
. NS	IS-18091	. SEE INSTRUCTION SHEET	1				
. NS	FI-18091	. VOIR FEUILLE D'INSTRUCTION	1				

From 4-8165 To 6-8906		Date:07/2024	PAGE:Y2-1005-02

FRONT AXLE - I BEAM RIGID MODEL "S84U"

Item#	Part	Description	XLII 45	XLII MTH40	XLII MTH45	XLII MTH45E	NOTES
		A) INCLUDING ITEMS #35 TO 50					
		B) INCLUDING ITEMS # 4 TO 12 & # 19 TO 21 & 23					
		1) NOT SOLD SEPARATELY					
		2) NOT SOLD BY PREVOST (SEE MANUFACTURING PART NUMBER AT END OF DESCRIPTION LINE)					

From Y-7046 To 3-8164		Date:07/2024	PAGE:Y2-1005-50
FRONT AXLE - INDEPENDENT MODEL "IS-84" / 16500LBS			

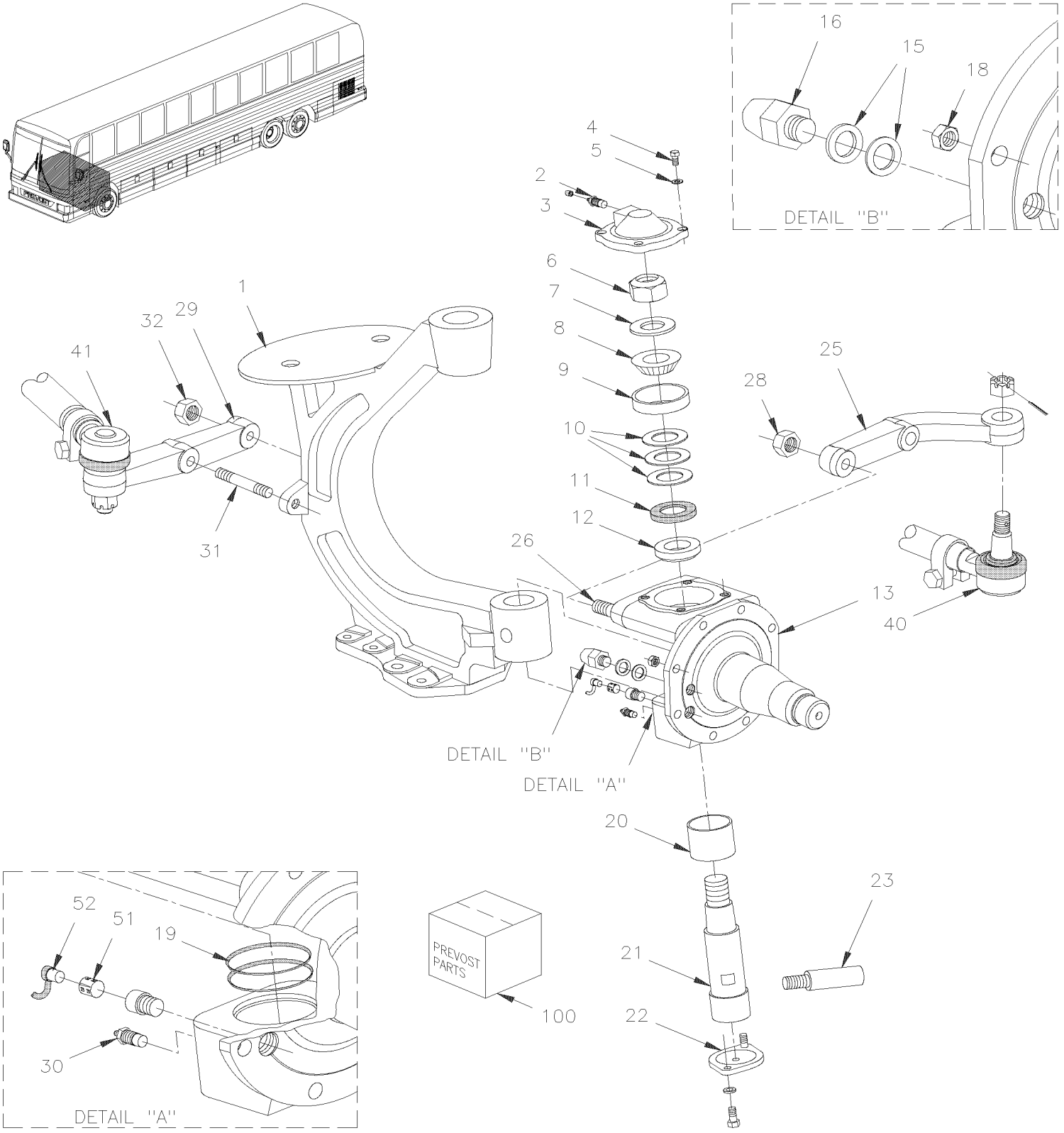

From Y-7046 To 3-8164		Date:07/2024	PAGE:Y2-1005-50

FRONT AXLE - INDEPENDENT MODEL "IS-84" / 16500LBS

Item#	Part	Description	XLII 45	XLII MTH40	XLII MTH45	XLII MTH45E	NOTES
	611209	AXLE ASSY L.H. & R.H. To Y-7373	1	1	1	1	
	611461	AXLE ASSY L.H. & R.H. From Y-7374 To 1-7806	1	1	1	1	
	611257	AXLE ASSY L.H. & R.H. From 1-7807 To 2-7851	1	1	1	1	
	611262	AXLE ASSY L.H. & R.H. From 2-7852	1	1	1	1	D
1	611160	. AXLE L.H. / W/PARALLEL KING PIN & BELLOW To 2-7851	1	1	1	1	
1	611161	. AXLE R.H. / W/PARALLEL KING PIN & BELLOW To 2-7851	1	1	1	1	
1	611265	. AXLE L.H. / W/PARALLEL KING PIN & BELLOW From 2-7852	1	1	1	1	D
1	611266	. AXLE R.H. / W/PARALLEL KING PIN & BELLOW From 2-7852	1	1	1	1	D
2	501491	. GREASE FITTING / 1/8 NPTx3/4"	2	2	2	2	
NS	504615	. PROTECTOR CAP / BLACK / .313 I.D. x .500	2	2	2	2	
3	611008	. CAP COVER	2	2	2	2	
4	500067	. SCREW CAP HEX 7/16-20x1 G5 Z050	4	4	4	4	
5	500447	. WASHER FL .562x1.375x.109 ZP	4	4	4	4	
6	611153	. NUT HEX STO 1 3/8"-12	2	2	2	2	
7	611010	. WASHER 38.23x69.85x7	2	2	2	2	
8	611011	. CONE BEARING	2	2	2	2	B
9	611012	. CUP BEARING	2	2	2	2	B
10	611013	. WASHER SHIM / .005"	AR	AR	AR	AR	
10	611014	. WASHER SHIM / .006"	AR	AR	AR	AR	
10	611015	. WASHER SHIM / .008"	AR	AR	AR	AR	
10	611016	. WASHER SHIM / .010"	AR	AR	AR	AR	
10	611017	. WASHER SHIM / .015"	AR	AR	AR	AR	
11	611145	. OIL SEAL	2	2	2	2	
12	611154	. SLEEVE	2	2	2	2	
13	611157	. KNUCKLE L.H. / W/PARALLEL KING PIN	1	1	1	1	
13	611158	. KNUCKLE R.H. / W/PARALLEL KING PIN	1	1	1	1	
13	611334	KNUCKLE L.H. / W/PARALLEL KING PIN ONLY W/RETROFIT UNITISED	1	1	1	1	R
13	611335	KNUCKLE R.H. / W/PARALLEL KING PIN ONLY W/RETROFIT UNITISED	1	1	1	1	R
15	611042	. WASHER SHIM / 1/32" TH	AR	AR	AR	AR	
15	611041	. WASHER SHIM / 1/16" TH	AR	AR	AR	AR	
15	611040	. WASHER SHIM / 1/8" TH	AR	AR	AR	AR	
16	611159	. SWIVEL STOP SCREW / REAR / 38MM	2	2	2	2	
NS	611149	. SWIVEL STOP SCREW / FRONT / 48MM	1	1	1	1	
NS	611150	. SWIVEL STOP SCREW / FRONT / 60MM	1	1	1	1	
18	5007001	. NUT HEX STO 1/2-20 Z050 G "C"	16	16	16	16	
NS	500091	. SCREW CAP HEX 1/2-20x1 3/4 G5 ZP	6	6	6	6	
19	611020	. V-SEAL	2	2	2	2	
NS	611152	. SEAL RING	2	2	2	2	
20	611144	. BUSHING LOWER KING PIN	2	2	2	2	
21	611148	. KING PIN	2	2	2	2	
22	611155	. CAP LOWER / KING PIN	2	2	2	2	
NS	611156	. O-RING	2	2	2	2	

From Y-7046 To 3-8164		Date:07/2024	PAGE:Y2-1005-50

FRONT AXLE - INDEPENDENT MODEL "IS-84" / 16500LBS

Item#	Part	Description	XLII 45	XLII MTH40	XLII MTH45	XLII MTH45E	NOTES
22	612364	. SCREW 3/8-24	4	4	4	4	
22	612363	. WASHER	4	4	4	4	
23	611258	. SWIVEL PIN LOCK	2	2	2	2	
25	611172	. STEERING ARM L.H.	1	1	1	1	
NS	611171	. STEERING ARM R.H.	1	1	1	1	
26	611167	. STUD 3/4-16 X 4 1/2"	2	2	2	2	
NS	611166	. STUD 3/4-16 X 3 1/4"	2	2	2	2	
28	500735	. NUT HEX STO 3/4-16 ZP	8	8	8	8	
29	661072	. UPRIGHT ARM R.H. / W/56 Deg	1	1	1	1	
NS	661071	. UPRIGHT ARM L.H. / W/56 Deg	1	1	1	1	
30	501493	. GREASE FITTING 45º / 1/8 NPT	2	2	2	2	
NS	504615	. PROTECTOR CAP / BLACK / .313 I.D. x .500	2	2	2	2	
31	611248	. STUD M16	1	1	1	1	
31	611249	. STUD M16	1	1	1	1	
32	500781	. NUT HEX STO M16-2.0 DP	2	2	2	2	
40	**Y2-1410-50**	**STEERING RODS - INSTALLATION W/INDEPENDENT "IS-84" / 16500LBS**					
41	**Y2-1605-50**	**FRONT AXLE - INSTALL W/INDEPENDENT "IS-84" / 16500LBS**					
51	641096	CLIP, SPRING / TO FIX SENSOR	2	2	2	2	
52	641288	SENSOR ABS (ON FRONT AXLE) 90° ANGLE	2	2	2	2	
100	611162	KIT REPAIR / STEERING KNUCKLE BUSHING (PARALLEL) / (REQUIRES 2 KITS)	AR	AR	AR	AR	C
. NS	611008	. CAP COVER	1	1	1	1	C
. NS	611153	. NUT HEX STO 1 3/8"-12	1	1	1	1	C
. NS	611010	. WASHER 38.23x69.85x7	1	1	1	1	C
. NS	611011	. CONE BEARING	1	1	1	1	C
. NS	611012	. CUP BEARING	1	1	1	1	C
. NS	611017	. WASHER SHIM / .015"	4	4	4	4	C
. NS	611016	. WASHER SHIM / .010"	4	4	4	4	C
. NS	611015	. WASHER SHIM / .008"	2	2	2	2	C
. NS	611014	. WASHER SHIM / .006"	2	2	2	2	C
. NS	611013	. WASHER SHIM / .005"	2	2	2	2	C
. NS	611145	. OIL SEAL	1	1	1	1	C
. NS	611154	. SLEEVE	1	1	1	1	C
. NS	611294	. V-SEAL	1	1	1	1	C
. NS	611144	. BUSHING LOWER KING PIN	1	1	1	1	C
. NS	611148	. KING PIN	1	1	1	1	C
. NS	611155	. CAP LOWER / KING PIN	1	1	1	1	C
. NS	611156	. O-RING	1	1	1	1	C
. NS	611258	. SWIVEL PIN LOCK	1	1	1	1	C
. NS	610029	. NUT 7/16 UNF	1	1	1	1	C
. NS	5001200	. WASHER FL .453x.875x.090	1	1	1	1	C

From Y-7046 To 3-8164		Date:07/2024	PAGE:Y2-1005-50

FRONT AXLE - INDEPENDENT MODEL "IS-84" / 16500LBS

Item#	Part	Description	XLII 45	XLII MTH40	XLII MTH45	XLII MTH45E	NOTES
		B) OUTER WHEEL BEARING					
		C) INCLUDING ITEM # 3 TO 12, # 19 TO 23					
		D) USE WITH AXLE 3° CASTER					
		R) USE ONLY WITH RETROFIT HUB "UNITISED" BEARING # 611329 (PAGE Y2-1300-99)					

From 4-8165 To 8-9339		Date:07/2024	PAGE:Y2-1005-51
FRONT AXLE - INDEPENDENT MODEL "NDIFS80P" / 18000LBS			

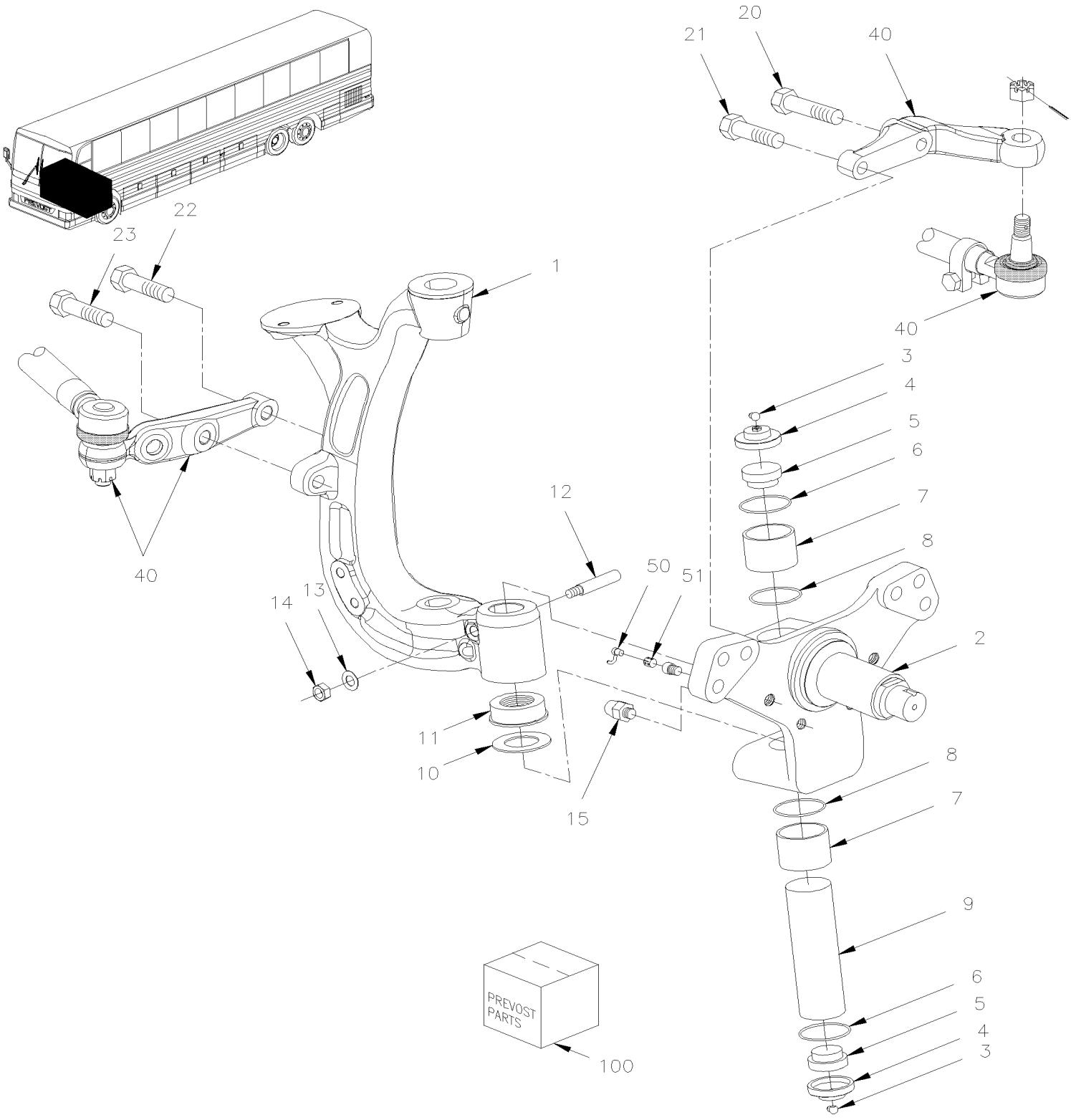

From 4-8165 To 8-9339		Date:07/2024	PAGE:Y2-1005-51

FRONT AXLE - INDEPENDENT MODEL "NDIFS80P" / 18000LBS

Item#	Part	Description	XLII 45	XLII MTH40	XLII MTH45	XLII MTH45E	NOTES
	611254	AXLE ASSY L.H. & R.H. / NDIFS80P / W/56 Deg To 6-8832	1	1	1	1	
	611345	AXLE ASSY L.H. & R.H. / NDIFS80P / W/58 Deg From 6-8833 To 7-9159	1		1	1	
	612351	AXLE ASSY L.H. & R.H. / NDIFS80P / W/58 Deg From 7-9160 To 8-9262	1		1	1	
	612355	AXLE ASSY L.H. & R.H. / NDIFS80P / W/58 Deg From 8-9263	1		1	1	
1	612325	. AXLE L.H. To 8-9262	1	1	1	1	
1	612370	. AXLE L.H. / W/DOUBLE LOCK ON KING PIN From 8-9263	1		1	1	
1	612327	. AXLE R.H. To 8-9262	1	1	1	1	
1	612369	. AXLE R.H. / W/DOUBLE LOCK ON KING PIN From 8-9263	1		1	1	
2	611280	. KNUCKLE L.H. & R.H.	2	2	2	2	
3	501490	. GREASE FITTING / 1/8 NPT	2	2	2	2	
4	611283	. CAP UPPER & LOWER	2	2	2	2	
5	611939	. FOAM INSERT	2	2	2	2	
6	611284	. SNAP RING, EXT 2400-55	2	2	2	2	
7	611937	. BUSHING (STD)	2	2	2	2	
8	611936	. OIL SEAL	2	2	2	2	
9	611947	. KING PIN WITH SINGLE LOCK PIN To 8-9262	1	1	1	1	
10	611956	. SHIM 0.013	AR	AR	AR	AR	
10	611957	. SHIM 0.025	AR	AR	AR	AR	
10	611958	. SHIM 0.050	AR	AR	AR	AR	
10	611959	. SHIM 0.020	AR	AR	AR	AR	
11	611941	. BEARING THRUST	1	1	1	1	
13	500446	. WASHER FL .531x1.250x.125 Z050	1	1	1	1	
14	500716	. NUT HEX 1/2-20 Z050	1	1	1	1	
15	611287	. LOCKSTOP SCREW FRONT	1	1	1	1	
NS	611288	. LOCKSTOP SCREW BACK	1	1	1	1	
20	611308	. SCREW CAP HEX M20-2.5x100 G12.9	1	1	1	1	
21	611306	. SCREW CAP HEX M20-2.5x65 G12.9	1	1	1	1	
22	611305	. SCREW CAP HEX M20-2.5x60 G12.9	1	1	1	1	
23	611307	. SCREW CAP HEX M20-2.5x80 G12.9	1	1	1	1	
40	**Y2-1410-51**	**STEERING RODS - INSTALLATION W/INDEPENDENT "NDIFS80P" / 18000LBS**					
50	641288	SENSOR ABS (ON FRONT AXLE) 90° ANGLE To 8-9278	1	1	1	1	
50	642084	SENSOR ABS 90° ANGLE - OEM From 8-9279	1	1	1	1	
51	641096	CLIP, SPRING / TO FIX SENSOR	1	1	1	1	
100	611962	KIT REPAIR / STEERING KNUCKLE BUSHING (STD) / (REQUIRE 2 KITS) To 8-9262	2	2	2	2	
100	611131	KIT REPAIR / STEERING KNUCKLE BUSHING (UNDER SIZED) / (REQUIRE 2 KITS) From 8-9263	1		1	1	T
. NS	SB07_03	. NSDIFS80P - KINGPIN KITS From 8-9263	1		1	1	T
100	611132	KIT REPAIR / STEERING KNUCKLE BUSHING (STD) / (REQUIRE 2 KITS) From 8-9263	1		1	1	
. NS	SB07_03	. NSDIFS80P - KINGPIN KITS From 8-9263	1		1	1	
		T) WITH THIS KITS YOU REQUIRE REAMER TOOL TO REPAIR					

		Date:07/2024	Y2-11
REAR AXLE			

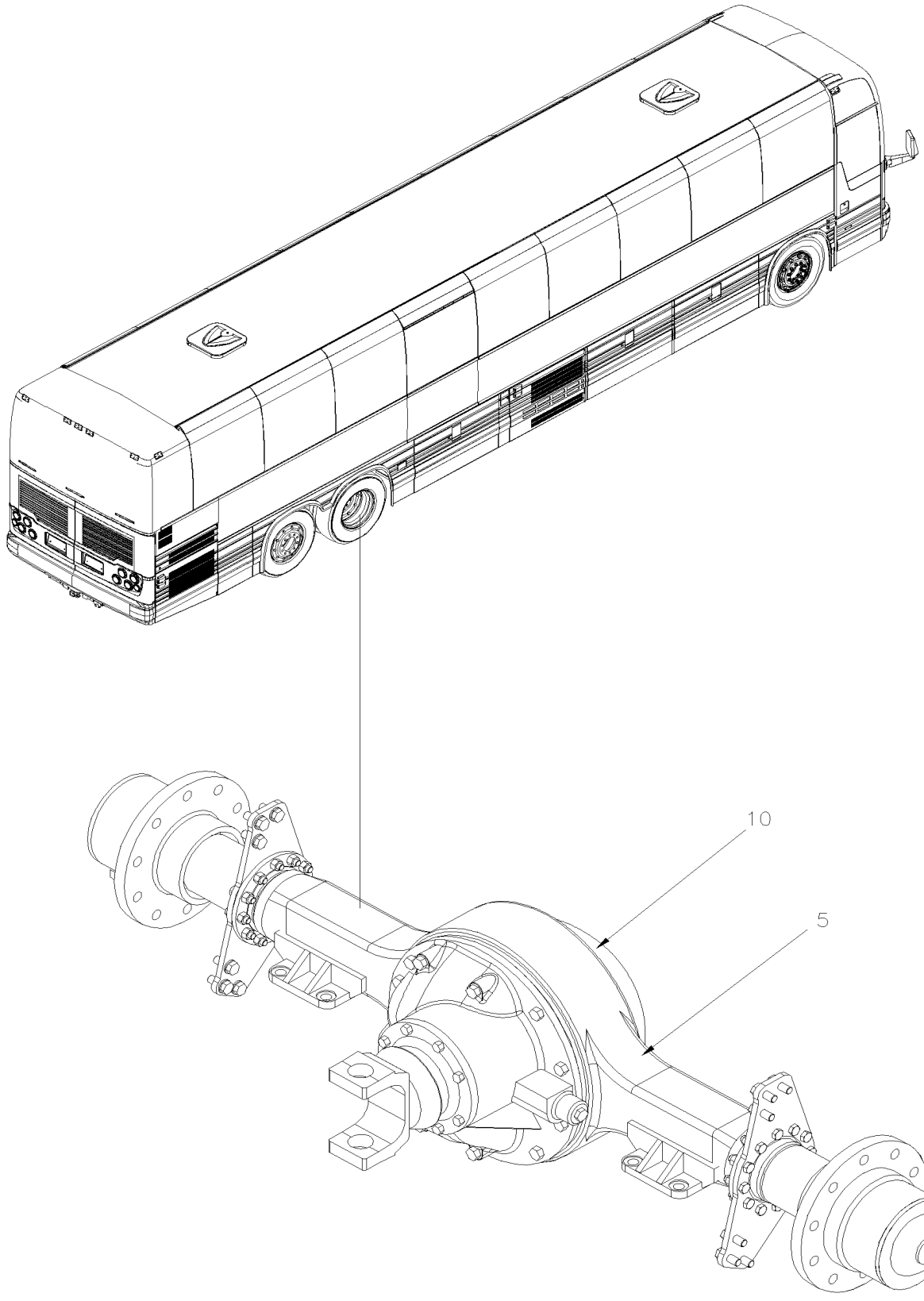

		Date:07/2024	Y2-11

REAR AXLE

Item#	Part	Description	XLII 45	XLII MTH40	XLII MTH45	XLII MTH45E	NOTES
5	Y2-1105-00	REAR AXLE - MODEL "RC23160" From Y-7046 To 8-9339					
10	Y2-1110-00	CARRIER ASSY From Y-7046 To 8-9339					

From Y-7046 To 8-9339		Date:07/2024	PAGE:Y2-1105-00
REAR AXLE - MODEL "RC23160"			

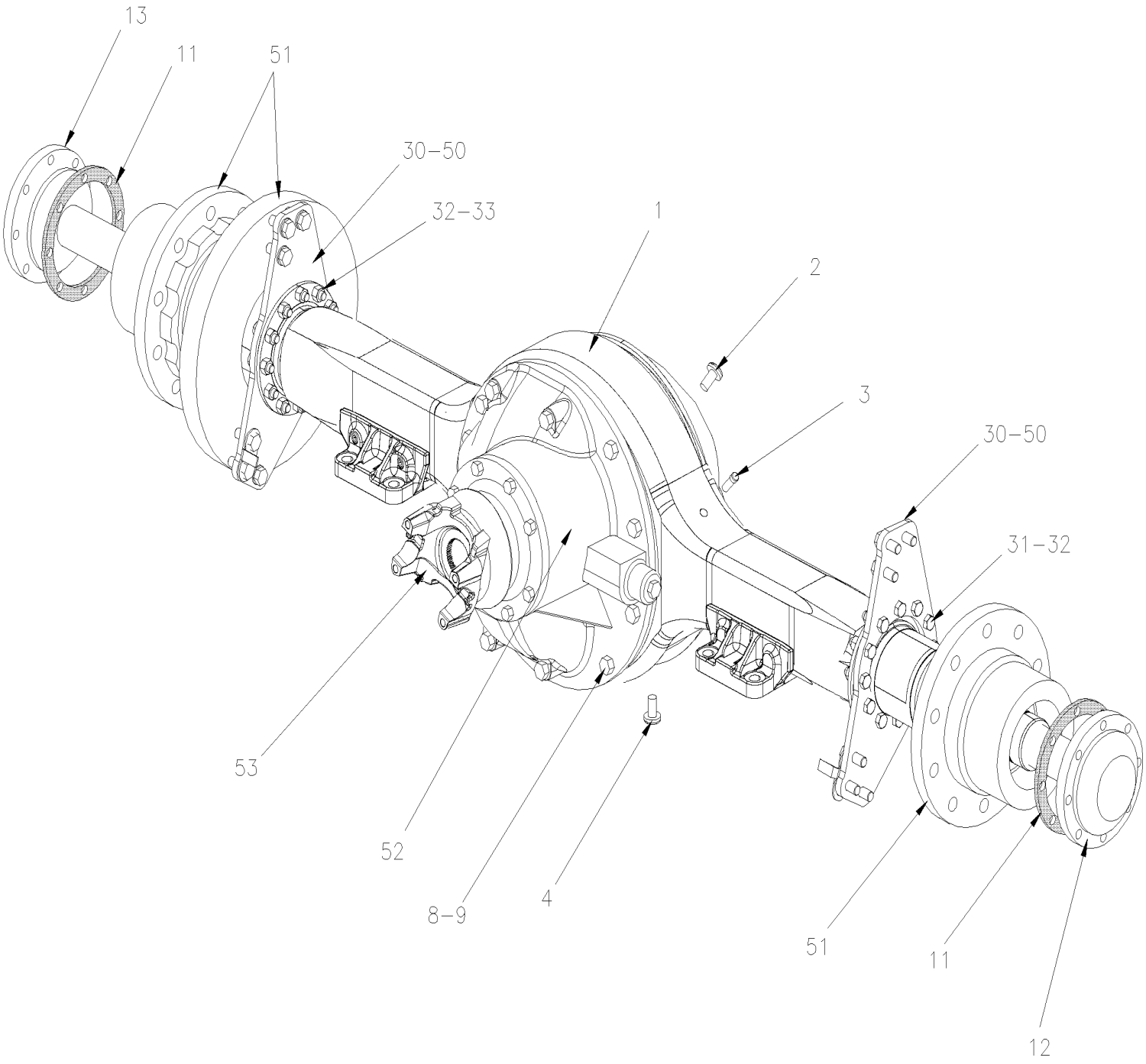

From Y-7046 To 8-9339		Date:07/2024	PAGE:Y2-1105-00

REAR AXLE - MODEL "RC23160"

Item#	Part	Description	XLII 45	XLII MTH40	XLII MTH45	XLII MTH45E	NOTES
		AXLE ASSY WITHOUT WHEELS STUD					
	621660	REAR AXLE ASSY / 3.07 RATIO To Y-7335	1	1	1	1	B
	621674	REAR AXLE ASSY / 3.07 RATIO From Y-7336 To 2-7822	1	1	1	1	C
	621661	REAR AXLE ASSY / 3.21 RATIO To Y-7335	1	1	1	1	B
	621675	REAR AXLE ASSY / 3.21 RATIO From Y-7336 To 2-7822	1	1	1	1	C
	621769	REAR AXLE ASSY / 3.42 RATIO From 5-8536 To 7-9160	1	1	1	1	
	621791	REAR AXLE ASSY / 3.42 RATIO From 7-9159	1	1	1	1	
	621770	REAR AXLE ASSY / 3.42 RATIO / SUPER SINGLE From 5-8536 To 7-9160	1	1	1	1	
	621792	REAR AXLE ASSY / 3.42 RATIO / SUPER SINGLE From 7-9159			1	1	
	621760	REAR AXLE ASSY / 3.58 RATIO From 5-8536 To 7-9160	1	1	1	1	
	621789	REAR AXLE ASSY / 3.58 RATIO From 7-9159			1	1	
	621768	REAR AXLE ASSY / 3.58 RATIO / SUPER SINGLE From 5-8536 To 7-9160	1	1	1	1	
	621790	REAR AXLE ASSY / 3.58 RATIO / SUPER SINGLE From 7-9159			1	1	
	621662	REAR AXLE ASSY / 3.73 RATIO To Y-7335	1	1	1	1	B
	621676	REAR AXLE ASSY / 3.73 RATIO From Y-7336 To 4-8176	1	1	1	1	C
	621708	REAR AXLE ASSY / 3.73 RATIO From 4-8177 To 4-8306	1	1	1	1	D
	621736	REAR AXLE ASSY / 3.73 RATIO From 4-8307 To 5-8535	1	1	1	1	
	621749	REAR AXLE ASSY / 3.73 RATIO From 5-8536 To 7-9160	1	1	1	1	
	621788	REAR AXLE ASSY / 3.73 RATIO From 7-9159			1	1	
	621742	REAR AXLE ASSY / 3.73 RATIO / SUPER SINGLE From 5-8536 To 7-9160	1	1	1	1	
	621782	REAR AXLE ASSY / 3.73 RATIO / SUPER SINGLE From 7-9159			1	1	
	621685	REAR AXLE ASSY / 4.10 RATIO From Y-7336 To 2-7822	1	1	1	1	
	621349	REAR AXLE ASSY / 4.10 RATIO From 2-7823 To 4-8176	1	1	1	1	
	621703	REAR AXLE ASSY / 4.10 RATIO From 4-8177 To 4-8306	1	1	1	1	D
	621732	REAR AXLE ASSY / 4.10 RATIO From 4-8307 To 5-8535	1	1	1	1	
	621744	REAR AXLE ASSY / 4.10 RATIO From 5-8536 To 7-9160	1	1	1	1	
	621784	REAR AXLE ASSY / 4.10 RATIO From 7-9159			1	1	
	621740	REAR AXLE ASSY / 4.10 RATIO / SUPER SINGLE From 5-8536 To 7-9160	1	1	1	1	
	621781	REAR AXLE ASSY / 4.10 RATIO / SUPER SINGLE From 7-9159			1	1	
	621663	REAR AXLE ASSY / 4.30 RATIO To Y-7335	1	1	1	1	B
	621677	REAR AXLE ASSY / 4.30 RATIO From Y-7336 To 2-7822	1	1	1	1	C
	621697	REAR AXLE ASSY / 4.30 RATIO From 2-7823 To 4-8176	1	1	1	1	
	621704	REAR AXLE ASSY / 4.30 RATIO From 4-8177 To 4-8306	1	1	1	1	D
	621733	REAR AXLE ASSY / 4.30 RATIO From 4-8307 To 5-8535	1	1	1	1	
	621745	REAR AXLE ASSY / 4.30 RATIO From 5-8536 To 7-9160	1	1	1	1	
	621785	REAR AXLE ASSY / 4.30 RATIO From 7-9159			1	1	
	621739	REAR AXLE ASSY / 4.30 RATIO / SUPER SINGLE From 5-8536 To 7-9160	1	1	1	1	
	621780	REAR AXLE ASSY / 4.30 RATIO / SUPER SINGLE From 7-9159			1	1	
	621690	REAR AXLE ASSY / 4.56 RATIO / W/DIFF LOCK From Y-7336 To 2-7822	1	1	1	1	
	621700	REAR AXLE ASSY / 4.56 RATIO / W/DIFF LOCK From Y-7823 To 4-8176	1	1	1	1	

From Y-7046 To 8-9339		Date:07/2024	PAGE:Y2-1105-00

REAR AXLE - MODEL "RC23160"

Item#	Part	Description	XLII 45	XLII MTH40	XLII MTH45	XLII MTH45E	NOTES
	621707	REAR AXLE ASSY / 4.56 RATIO / W/DIFF LOCK From 4-8177 To 4-8306	1	1	1	1	D
	621737	REAR AXLE ASSY / 4.56 RATIO / W/DIFF LOCK From 4-8307 To 5-8535	1	1	1	1	
	621748	REAR AXLE ASSY / 4.56 RATIO / W/DIFF LOCK From 5-8536 To 7-9160	1	1	1	1	
	621741	REAR AXLE ASSY / 4.56 RATIO / W/DIFF LOCK & SUPER SINGLE From 5-8536 To 7-9160	1	1	1	1	
	621664	REAR AXLE ASSY / 4.56 RATIO To Y-7335	1	1	1	1	B
	621678	REAR AXLE ASSY / 4.56 RATIO From Y-7336 To 2-7822	1	1	1	1	C
	621698	REAR AXLE ASSY / 4.56 RATIO From 2-7823 To 4-8176	1	1	1	1	
	621705	REAR AXLE ASSY / 4.56 RATIO From 4-8177 To 4-8306	1	1	1	1	D
	621734	REAR AXLE ASSY / 4.56 RATIO From 4-8307 To 5-8535	1	1	1	1	
	621746	REAR AXLE ASSY / 4.56 RATIO From 5-8536 To 7-9160	1	1	1	1	
	621786	REAR AXLE ASSY / 4.56 RATIO From 7-9159			1	1	
	621738	REAR AXLE ASSY / 4.56 RATIO / SUPER SINGLE From 5-8536 To 7-9160	1	1	1	1	
	621779	REAR AXLE ASSY / 4.56 RATIO / SUPER SINGLE From 7-9159			1	1	
	621665	REAR AXLE ASSY / 4.88 RATIO To Y-7335	1	1	1	1	B
	621679	REAR AXLE ASSY / 4.88 RATIO From Y-7336 To 2-7822	1	1	1	1	C
	621699	REAR AXLE ASSY / 4.88 RATIO From 2-7823 To 4-8176	1	1	1	1	
	621706	REAR AXLE ASSY / 4.88 RATIO From 4-8177 To 4-8306	1	1	1	1	D
	621735	REAR AXLE ASSY / 4.88 RATIO From 4-8307 To 5-8535	1	1	1	1	
	621747	REAR AXLE ASSY / 4.89 RATIO From 5-8536 To 7-9160	1	1	1	1	
	621787	REAR AXLE ASSY / 4.89 RATIO From 7-9159			1	1	
	621743	REAR AXLE ASSY / 4.89 RATIO / SUPER SINGLE From 5-8536 To 7-9160	1	1	1	1	
	621783	REAR AXLE ASSY / 4.89 RATIO / SUPER SINGLE From 7-9159			1	1	
1	621614	HOUSING ASSY W/BRACKET WELDED To 5-8535	1	1	1	1	E
1	621754	HOUSING ASSY W/BRACKET WELDED From 5-8536	1	1	1	1	
1	621752	HOUSING ASSY W/BRACKET WELDED / SUPER SINGLE	1	1	1	1	
NS	680053	. SILICONE TUBE RTV103 / BLACK / 3 oz	2	2	2	2	
2	621142	. PLUG FILLER	1	1	1	1	
3	620442	. BREATHER / (CURRENT 1 PIECE)	2	2	2	2	
3	621871	. BREATHER AND TUBE	1	1	1	1	S
4	621615	. PLUG MAGNETIC	1	1	1	1	
8	5001422	. SCREW CAP HEX 5/8-11x2 1/2 G8 ZP	12	12	12	12	
8	5001423	. SCREW CAP HEX 5/8-11x4 G8 ZP	4	4	4	4	
8	621221	. SCREW CAP HEX 5/8-11x1 3/4 G8 ZP	AR	AR	AR	AR	
9	620474	. WASHER HARDENED / 5/8" I.D.	18	18	18	18	
10	500742	. NUT HEX STO 7/8-14 ZP	18	18	18	18	
11	620351	. GASKET / AXLE SHAFT W/8 STUDS	2	2	2	2	
12	621626	. SHAFT, AXLE / 42" (stp 1537) (INSTALL RH CURBSIDE)	1	1	1	1	E
12	621755	. SHAFT, AXLE / 46.30" (stp 1998) / SUPER SINGLE (INSTALL RH CURBSIDE)	1	1	1	1	F
12	621692	. SHAFT, AXLE / (stp 9645) / W/DIFF LOCK	1	1	1	1	E
13	621625	. SHAFT, AXLE / 40 1/8" (stp 1536) (INSTALL LH STREET SIDE)	1	1	1	1	E
13	621756	. SHAFT, AXLE / 44.37"(stp 1999) / SUPER SINGLE (INSTALL LH STREET SIDE)	1	1	1	1	F

From Y-7046 To 8-9339		Date:07/2024	PAGE:Y2-1105-00

REAR AXLE - MODEL "RC23160"

Item#	Part	Description	XLII 45	XLII MTH40	XLII MTH45	XLII MTH45E	NOTES
13	621692	. SHAFT, AXLE / (stp 9645) / W/DIFF LOCK	1	1	1	1	E
NS	689949	OIL DIFERENTIAL S.A.E. 140 GL5 85-140W (VRAC)	AR	AR	AR	AR	
		NEXT FOLLOWING ITEMS ARE RELATED					
		WITH "OPTION" DIFFERENTIAL LOCK					
NS	624216	DECAL "CAUTION" DIFFERENTIAL LOCK..."	1	1	1	1	
NS	562697	SWITCH / ON-ON / D.P.D.T. / CH-OVER / W/RED & GREEN LED	1	1	1	1	
NS	564013	CAP / DIFFERENTIAL LOCK	1	1	1	1	
NS	142198	HOSE ASSY / DIFF & STRUCTURE / #6 875MM	1	1	1	1	
NS	172589	SUPPORT HOSE / (WELDED TO STRUCTURE)	1	1	1	1	
NS	641937	VALVE, 3 WAYS, 2 POSITIONS N.C. / W/MAN OVERRIDE	1	1	1	1	
. NS	641929	. COIL 24V	1	1	1	1	
. NS	641385	. CONNECTOR / SOCKET HOUSING ASSY 3C / PNEUMAC 54934-01	1	1	1	1	
NS	641934	SILENCER / MUFFLER / 3/8NPT-M	1	1	1	1	
NS	260862	PANEL TO FIX VALVE AT REAR COMPARTMENT			1		
30	621669	CALIPER MOUNTING BRACKET L.H. & R.H. To 7-9158	2	2	2	2	
. NS	621709	. CALIPER MOUNTING BRACKET L.H. & R.H. W/OUT BUSHING To 7-9158	1	1	1	1	
. NS	621684	. BUSHING ABS SENSOR MOUNTING DRIVE AXLE To 7-9158	1	1	1	1	
30	621868	CALIPER MOUNTING BRACKET L.H. & R.H. W/OUT BUSHING From 7-9159	2	2	2	2	
30	621869	BUSHING - ABS SENSOR From 7-9159	2	2	2	2	
31	621365	WASHER (HARD) .59IDX.97ODX.09	12	12	12	12	
32	621365	WASHER (HARD) .59IDX.97ODX.09	24	24	24	24	
33	621638	NUT HEX 9/16-18 GR8	12	12	12	12	
50	**Y2-1235-00**	**BRAKE PARTS - DRIVE AXLE "MERITOR" W/DISCS / SB7 SERIES**					
50	**Y2-1225-01**	**BRAKE PARTS "KNORR-BREMSE" SN7 SERIES**					
51	**Y2-1305-00**	**HUB & ROTOR - DRIVE AXLE**					
52	**Y2-1110-00**	**CARRIER ASSY**					
53	**Y2-0905-00**	**PROPELLER SHAFT**					
		B) W/ABS ON DRIVE WHEEL END / PLAIN DISC					
		C) W/ABS ON DRIVE WHEEL END / VENTED DISC					
		D) W/ABS PROTECTOR SHIELD					
		E) WITH DOUBLE WHEEL ONLY					
		F) WITH SUPER SINGLE ONLY					
		S) PRODUCT IMPROVEMENT					

From Y-7046 To 8-9339		Date:07/2024	PAGE:Y2-1110-00
CARRIER ASSY			

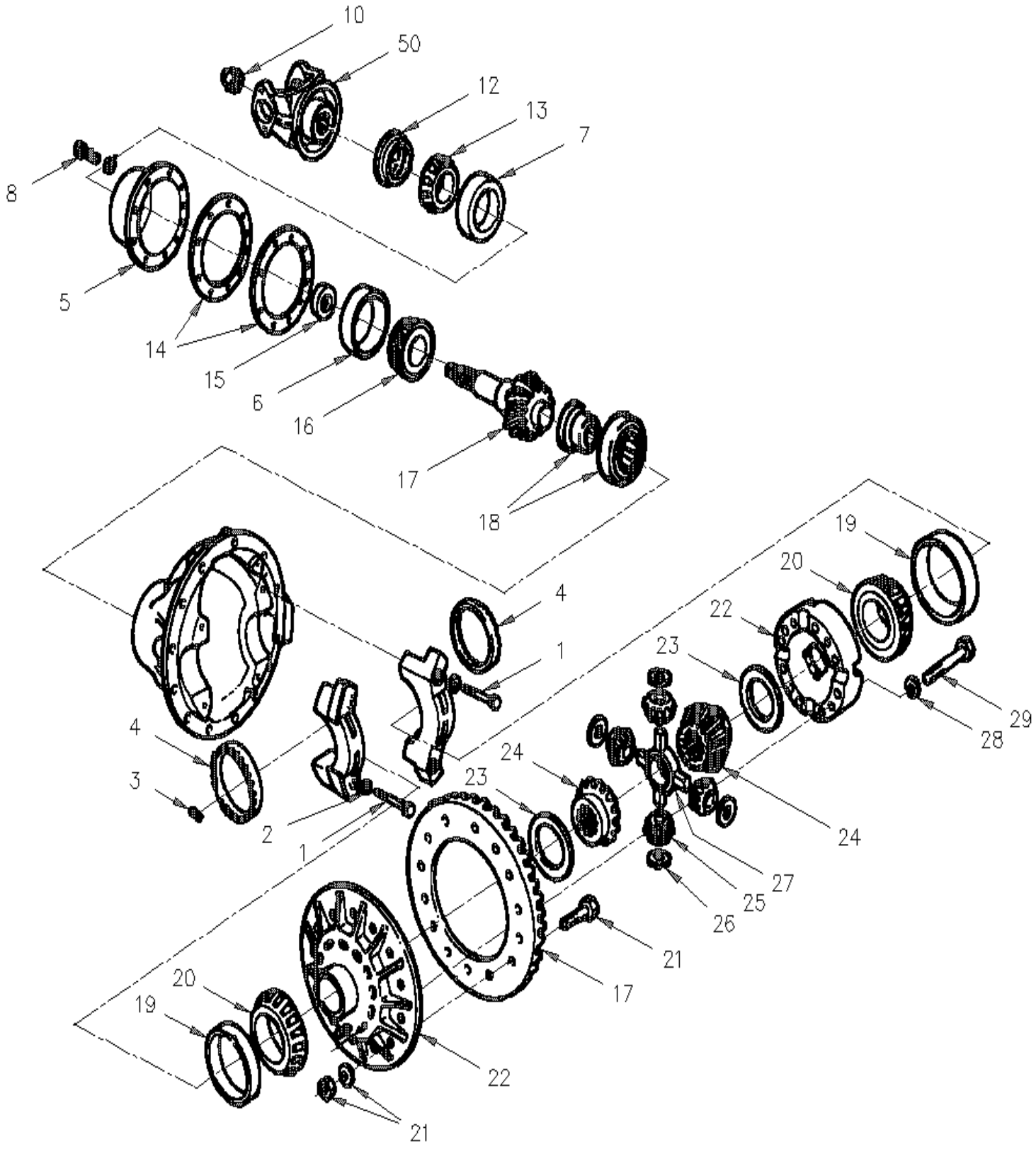

From Y-7046 To 8-9339		Date:07/2024	PAGE:Y2-1110-00

CARRIER ASSY

Item#	Part	Description	XLII 45	XLII MTH40	XLII MTH45	XLII MTH45E	NOTES
	621549	CARRIER ASSY / 3.07 RATIO To 2-7822	1				
	621714	CARRIER ASSY / 3.07 RATIO From 2-7823	1				
	621550	CARRIER ASSY / 3.21 RATIO To 2-7822	1				
	621715	CARRIER ASSY / 3.21 RATIO From 2-7823	1				
	621551	CARRIER ASSY / 3.42 RATIO To 2-7822					
	621722	CARRIER ASSY / 3.42 RATIO From 2-7823	1	1	1	1	
	621547	CARRIER ASSY / 3.58 RATIO To 2-7822	1	1	1	1	
	621728	CARRIER ASSY / 3.58 RATIO From 2-7823	1	1	1	1	
	621548	CARRIER ASSY / 3.73 RATIO To 2-7822	1	1	1	1	
	621723	CARRIER ASSY / 3.73 RATIO From 2-7823	1	1	1	1	
	621552	CARRIER ASSY / 4.10 RATIO To 2-7822	1	1	1	1	
	621724	CARRIER ASSY / 4.10 RATIO From 2-7823	1	1	1	1	
	621555	CARRIER ASSY / 4.30 RATIO To 2-7822	1	1	1	1	
	621725	CARRIER ASSY / 4.30 RATIO From 2-7823	1	1	1	1	
	621553	CARRIER ASSY / 4.56 RATIO To 2-7822	1	1	1	1	
	621726	CARRIER ASSY / 4.56 RATIO From 2-7823	1	1	1	1	
	621691	CARRIER ASSY / 4.56 RATIO To 2-7822	1	1	1	1	B
	621729	CARRIER ASSY / 4.56 RATIO / W/DIFF LOCK From 2-7823	1	1	1	1	B
	621554	CARRIER ASSY / 4.89 RATIO To 2-7822	1	1	1	1	
	621727	CARRIER ASSY / 4.89 RATIO From 2-7823	1	1	1	1	
	N.S.S.	. CASE CARRIER	1	1	1	1	1
1	621418	. . SCREW, CAP	2	2	2	2	
2	621417	. . WASHER	4	4	4	4	
3	505128	. SPRING, PIN 1/4 X 2	2	2	2	2	
4	621479	. RING, ADJUSTING / W/MODEL 3200-P-1706	2	2	2	2	
5	621419	. CASE & CUP ASSY / PINION BEARING	1	1	1	1	
6	621420	. . CUP BEARING / INNER BEARING	1	1	1	1	
7	621421	. . CUP BEARING / OUTER BEARING	1	1	1	1	
8	621439	. SCREW, CAP	8	8	8	8	
10	621418	. SCREW, CAP	4	4	4	4	
NS	621445	. NUT / DRIVE PINION	1	1	1	1	
12	621424	. SEAL, OIL	1	1	1	1	
NS	195671	SEAL INSTALLER TOOL / CARRIER DRIVE PINION (2731T1)	1	1	1	1	I
13	621423	. CONE BEARING / OUTER	1	1	1	1	
14	621438	. SHIM 0.020	AR	AR	AR	AR	
14	621437	. SHIM 0.008	AR	AR	AR	AR	
14	621436	. SHIM 0.005	AR	AR	AR	AR	
14	621435	. SHIM 0.003	AR	AR	AR	AR	
15	621434	. SPACER .263	AR	AR	AR	AR	
15	621433	. SPACER .262	AR	AR	AR	AR	
15	621432	. SPACER .261	AR	AR	AR	AR	
15	621431	. SPACER .260	AR	AR	AR	AR	

From Y-7046 To 8-9339		Date:07/2024	PAGE:Y2-1110-00

CARRIER ASSY

Item#	Part	Description	XLII 45	XLII MTH40	XLII MTH45	XLII MTH45E	NOTES
15	621430	. SPACER .256	AR	AR	AR	AR	
15	621429	. SPACER .254	AR	AR	AR	AR	
15	621428	. SPACER .253	AR	AR	AR	AR	
15	621427	. SPACER .252	AR	AR	AR	AR	
15	621426	. SPACER .251	AR	AR	AR	AR	
15	621425	. SPACER .250	AR	AR	AR	AR	
16	621422	. CONE BEARING / INNER	1	1	1	1	
17	621485	. SET, GEAR DRIVE & PINION / 3.07 RATIO To 2-7822	1	1	1	1	
17	621717	. SET, GEAR DRIVE & PINION / 3.07 RATIO From 2-7823	1	1	1	1	
17	621474	. SET, GEAR DRIVE & PINION / 3.21 RATIO To 2-7822	1	1	1	1	
17	621721	. SET, GEAR DRIVE & PINION / 3.21 RATIO From 2-7823	1	1	1	1	
17	621472	. SET, GEAR DRIVE & PINION / 3.42 RATIO To 2-7822	1	1	1	1	
17	621712	. SET, GEAR DRIVE & PINION / 3.42 RATIO From 2-7823	1	1	1	1	
17	621483	. SET, GEAR DRIVE & PINION / 3.58 RATIO To 2-7822	1	1	1	1	
17	621718	. SET, GEAR DRIVE & PINION / 3.58 RATIO From 2-7823	1	1	1	1	
17	621484	. SET, GEAR DRIVE & PINION / 3.73 RATIO To 2-7822	1	1	1	1	
17	621713	. SET, GEAR DRIVE & PINION / 3.73 RATIO From 2-7823	1	1	1	1	
17	621487	. SET, GEAR DRIVE & PINION / 4.10 RATIO To 2-7822	1	1	1	1	
17	621710	. SET, GEAR DRIVE & PINION / 4.10 RATIO From 2-7823	1	1	1	1	
17	621646	. SET, GEAR DRIVE & PINION / 4.30 RATIO To 2-7822	1	1	1	1	
17	621720	. SET, GEAR DRIVE & PINION / 4.30 RATIO From 2-7823	1	1	1	1	
17	621538	. SET, GEAR DRIVE & PINION / 4.56 RATIO To 2-7822	1	1	1	1	
17	621716	. SET, GEAR DRIVE & PINION / 4.56 RATIO From 2-7823	1	1	1	1	
17	621541	. SET, GEAR DRIVE & PINION / 4.89 RATIO To 2-7822	1	1	1	1	
17	621719	. SET, GEAR DRIVE & PINION / 4.89 RATIO From 2-7823	1	1	1	1	
18	621481	. BEARING SPIGOT / INNER & OUTER / W/3200-P-1706	1	1	1	1	
NS	621482	. RING, SNAP / TO FIX SPIGOT BEARING	1	1	1	1	
19	621210	. CUP BEARING	2	2	2	2	A
20	621209	. CONE BEARING	2	2	2	2	A
21	621444	. BOLT, NUT & WASHER / (KIT OF 12)	1	1	1	1	
22	621480	. CASE ASSY W/RATIO 3.07, 3.21, 3.42& 3.73	1	1	1	1	
22	621488	. CASE ASSY / W/RATIO 3.91, 4.10, 4.30 & 4.56	1	1	1	1	
22	621539	. CASE ASSY / W/RATIO 4.89	1	1	1	1	
23	621449	. . WASHER, THRUST / SIDE GEAR	2	2	2	2	
24	621450	. . GEAR, SIDE	2	2	2	2	
25	621452	. . GEAR, PINION	4	4	4	4	
26	621453	. . WASHER, GEAR PINION	4	4	4	4	
27	621451	. . SPIDER	1	1	1	1	
28	621447	. . WASHER	12	12	12	12	
29	621448	. . SCREW, CAP	12	12	12	12	
NS	621653	KIT, CUP & CONE	1	1	1	1	A
50	621403	YOKE (1810) FULL ROUND (46 SPL)	1	1	1	1	

From Y-7046 To 8-9339		Date:07/2024	PAGE:Y2-1110-00

CARRIER ASSY

Item#	Part	Description	XLII 45	XLII MTH40	XLII MTH45	XLII MTH45E	NOTES
. NS	621501	. DEFLECTOR, OIL	1	1	1	1	
. NS	621492	. SPEEDY SLEEVE 3.250" I.D. / TO REPAIR OIL LEAK ON YOKE	1	1	1	1	
NS	621501	. DEFLECTOR, OIL	1	1	1	1	
NS	621492	SPEEDY SLEEVE 3.250" I.D. / TO REPAIR OIL LEAK ON YOKE	1	1	1	1	
		A) ALSO SOLD IN KIT #621653					
		B) CARRIER WITH DIFFERENTIAL LOCK					
		I) THIS TOOL INSTALLER ARE USE WITH NEW SEAL STAMPED A1205A2731					
		1) NOT SOLD SEPARATELY					

		Date:07/2024	Y2-12
BRAKE			

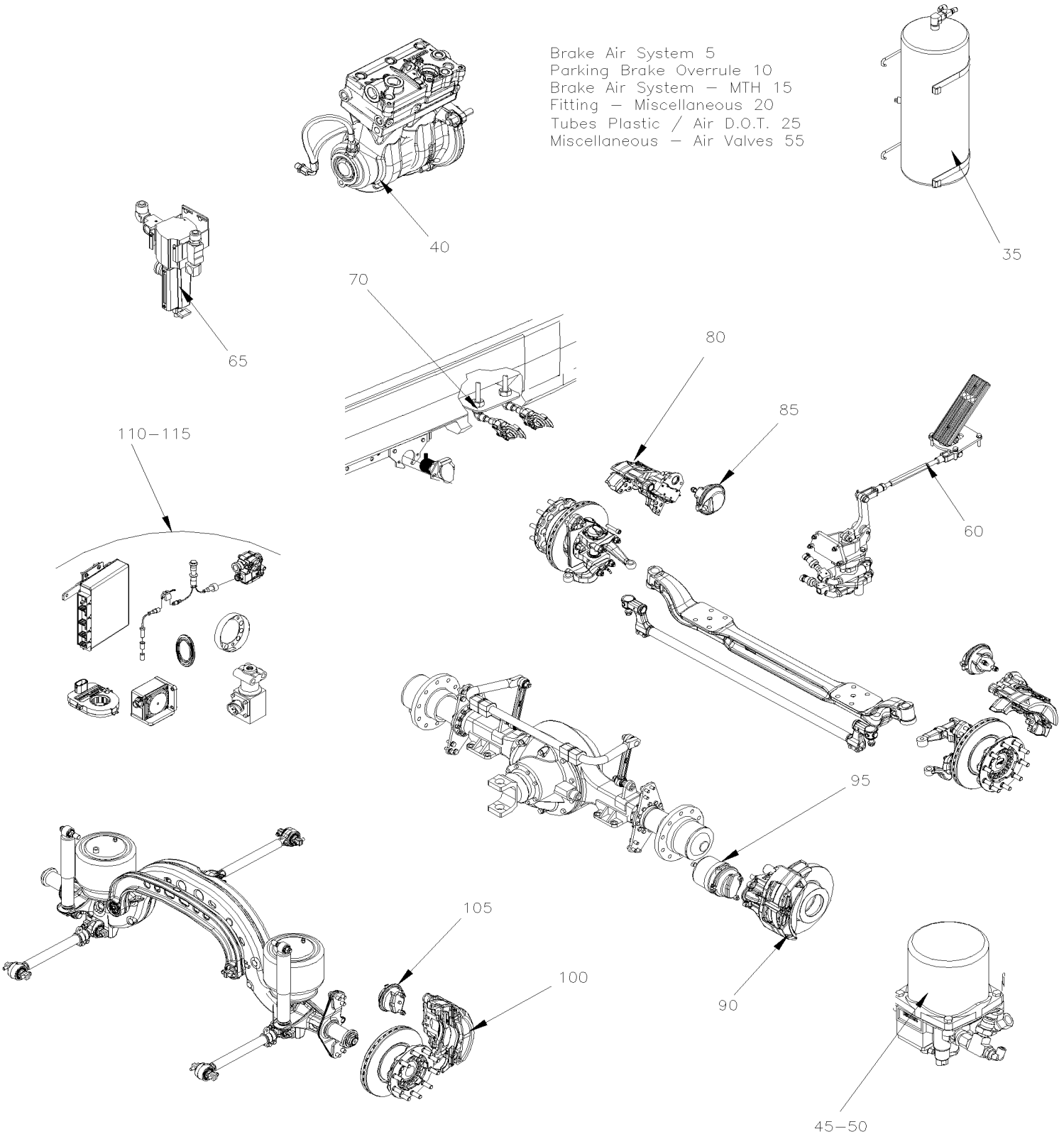

		Date:07/2024	Y2-12

BRAKE

Item#	Part	Description	XLII 45	XLII MTH40	XLII MTH45	XLII MTH45E	NOTES
5	Y2-1200-00	BRAKE AIR SYSTEM From Y-7046 To 7-9095					
10	Y2-1200-05	PARKING BRAKE OVERRULE From Y-7046 To 6-8906					
15	Y2-1200-50	BRAKE AIR SYSTEM - MTH From 7-9096 To 8-9339					
20	Y2-1201-00	FITTING - MISCELLANEOUS From Y-7046 To 8-9339					
25	Y2-1202-00	TUBES PLASTIC / AIR D.O.T. From Y-7046 To 8-9339					
35	Y2-1203-00	AIR TANK - INSTALLATION From Y-7046 To 2-7799					
35	Y2-1203-01	AIR TANK - INSTALLATION From 2-7800 To 8-9339					
40	Y2-1205-10	AIR COMPRESSOR - "TU-FLO 750" - WITH DETROIT S-60 From Y-7046 To 3-8164					
40	Y2-1205-11	AIR COMPRESSOR - "BA921" - WITH DETROIT S-60 From 4-8165 To 8-9339					
45	Y2-1215-00	AIR DRYER - "BENDIX" AD-9 From Y-7046 To 2-7799					
45	Y2-1215-01	AIR DRYER - "ROCKWELL WABCO" From Y-7046 To 2-7799					
45	Y2-1215-02	AIR DRYER - "HALDEX" From 2-7800 To 3-7992					
45	Y2-1215-03	AIR DRYER - "ROCKWELL WABCO" From 3-7993 To 3-8164					
45	Y2-1215-04	AIR DRYER - "HALDEX" From 4-8165 To 8-9339					
50	Y2-1215-10	AIR DRYER - "HALDEX" - INSTALLATION From 2-7800 To 8-9339					
50	Y2-1215-11	AIR DRYER TUBE - INSTALLATION From 2-7800 To 3-8164					
50	Y2-1215-12	AIR DRYER - INSTALLATION From 4-8165 To 6-8906					
50	Y2-1215-15	CHECK VALVE INSTALLATION WITH "WABCO" & AD-9 From 4-8165 To 6-8906					
55	Y2-1220-00	MISCELLANEOUS AIR VALVE From Y-7046 To 8-9339					
60	Y2-1220-10	BRAKE PEDAL VALVE - "BENDIX" From Y-7046 To 8-9339					
65	Y2-1220-15	AIR FILTER - ACCESSORIES From Y-7046 To 8-9339					
70	Y2-1220-50	TRAILER VALVE INSTALLATION From Y-7046 To 8-9339					
80	Y2-1225-00	BRAKE PARTS - FRONT AXLE - W/"KNORR-BREMSE" / SB7 SERIES From Y-7046 To 7-9159					
80	Y2-1225-01	BRAKE PARTS "KNORR-BREMSE" SN7 SERIES From 7-9160 To 8-9339					
80	Y2-1225-02	BRAKE PARTS "KNORR-BREMSE" SN7 SERIES W/NEW SLIDE PINS From Y-7046 To 8-9339					
85	Y2-1225-10	BRAKE CHAMBER - FRONT AXLE TYPE 22 From Y-7046 To 3-8164					
85	Y2-1225-11	BRAKE CHAMBER - FRONT AXLE TYPE 24 From Y-7046 To 8-9339					
85	Y2-1225-12	BRAKE CHAMBER - FRONT AXLE TYPE 27 From 4-8165 To 8-9339					
90	Y2-1235-00	BRAKE PARTS - DRIVE AXLE "MERITOR" W/DISCS / SB7 SERIES From Y-7046 To 7-9159					
95	Y2-1235-10	BRAKE CHAMBER - DRIVE AXLE "KNORR-BREMSE" From Y-7046 To 8-9339					
100	Y2-1245-00	BRAKE PARTS - TAG AXLE - W/"KNORR-BREMSE" / SB7 SERIES From Y-7046 To 7-9159					
105	Y2-1245-10	BRAKE CHAMBER - TAG AXLE TYPE 16/16 From Y-7046 To 3-8164					
105	Y2-1245-11	BRAKE CHAMBER - TAG AXLE TYPE 14/16 From 4-8165 To 8-9278					
105	Y2-1245-12	BRAKE CHAMBER - TAG AXLE TYPE 14 & 16 From 8-9279 To 8-9339					
110	Y2-1250-00	ANTI-LOCK BRAKING SYSTEM From Y-7046 To 8-9278					
115	Y2-1250-10	ABS BRAKE VALVE INSTALLATION From 4-8165 To 8-9339					

From Y-7046 To 7-9095		Date:07/2024	PAGE:Y2-1200-00
BRAKE AIR SYSTEM			

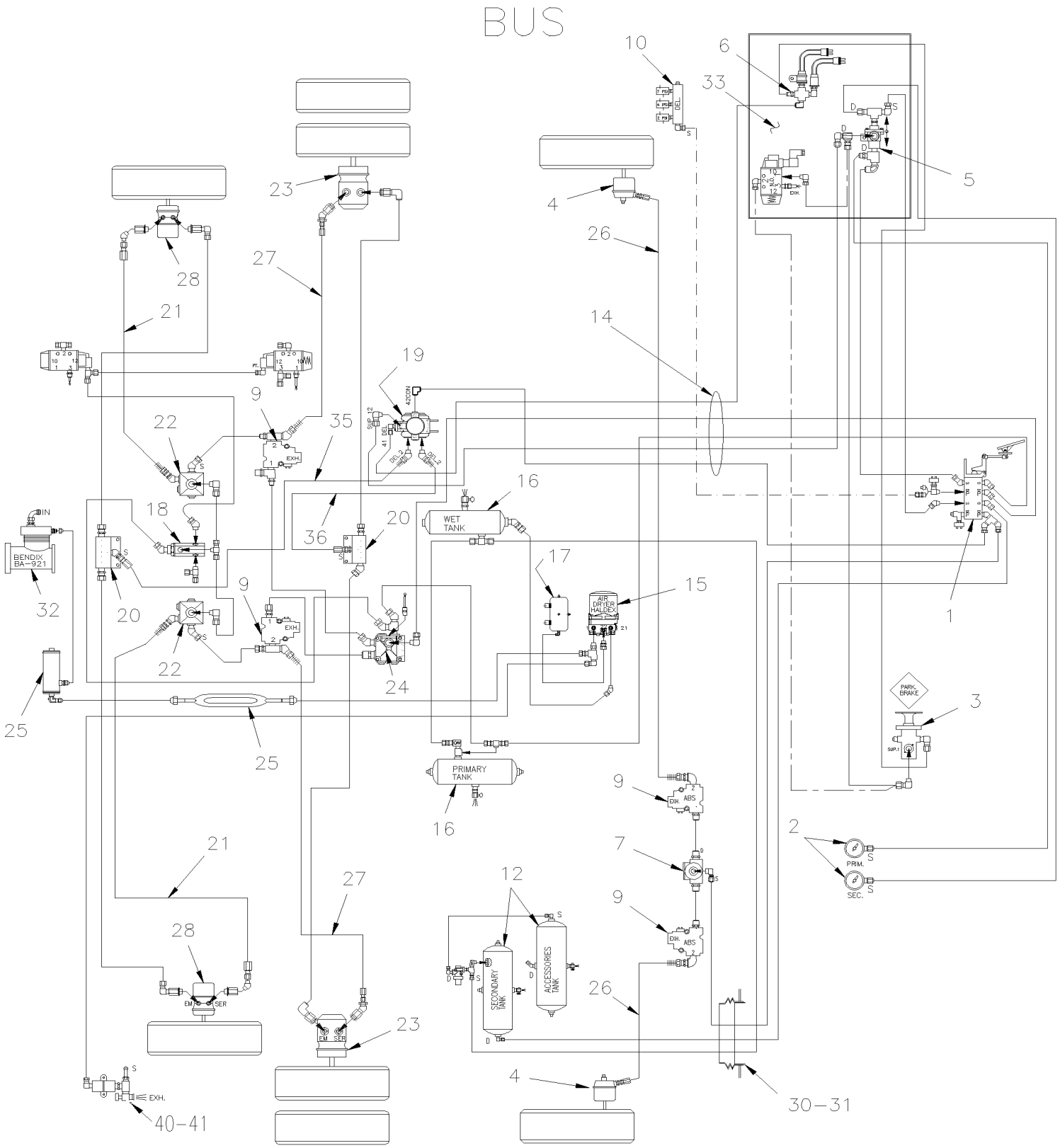

From Y-7046 To 7-9095		Date:07/2024	PAGE:Y2-1200-00
BRAKE AIR SYSTEM			

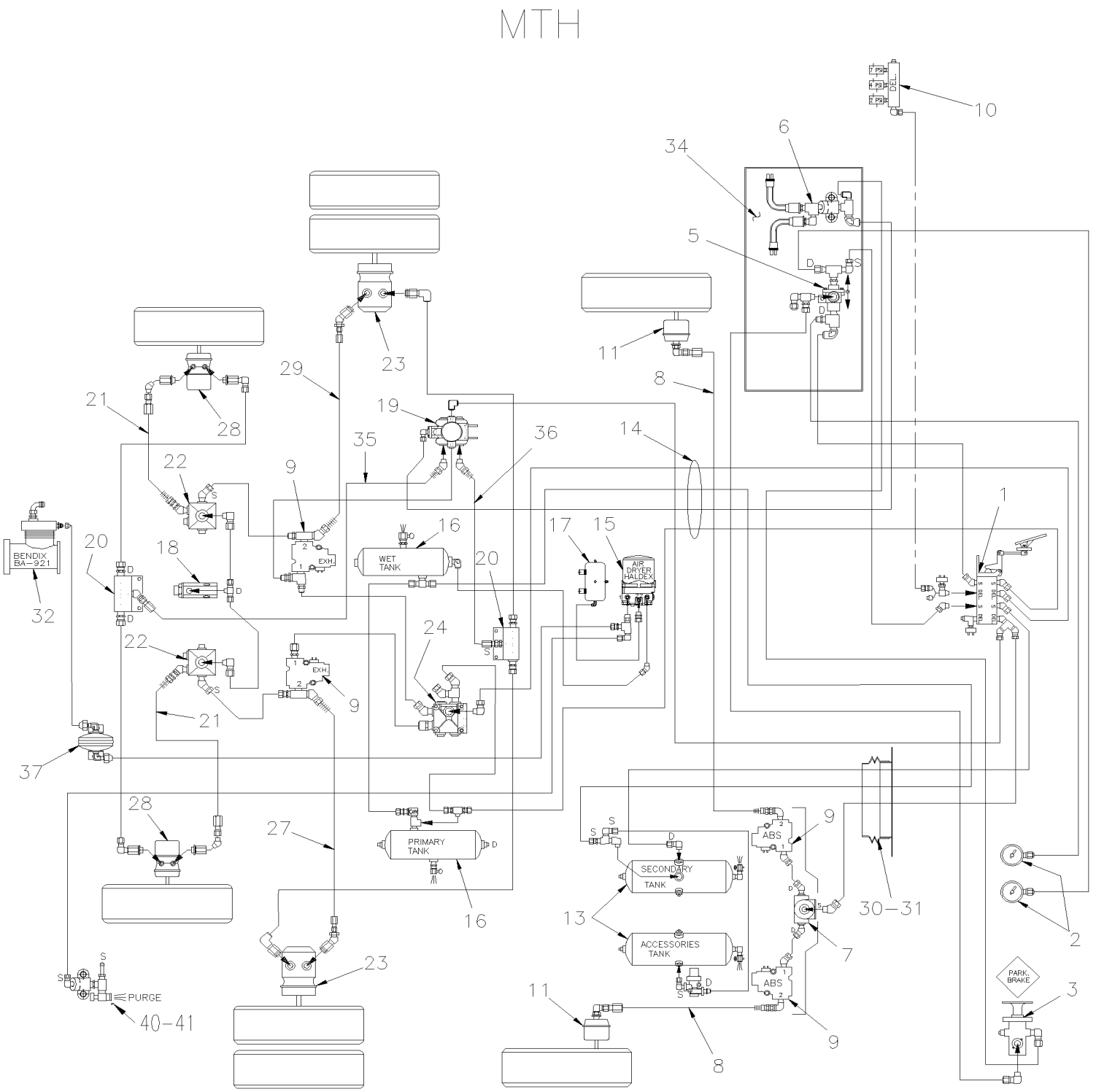

From Y-7046 To 7-9095		Date:07/2024	PAGE:Y2-1200-00

BRAKE AIR SYSTEM

Item#	Part	Description	XLII 45	XLII MTH40	XLII MTH45	XLII MTH45E	NOTES
1	**Y2-1220-10**	**BRAKE PEDAL VALVE - "BENDIX"**					
2	**Y2-0645-20**	**CENTER DASHBOARD PANEL**					
3	641128	VALVE, CONTROL VALVE PP-1 / 40PSI	1	1	1	1	
. NS	641154	. REPAIR KIT / PP-1 & RD-3	1	1	1	1	
4	**Y2-1225-10**	**BRAKE CHAMBER - FRONT AXLE TYPE 22**					
4	**Y2-1225-11**	**BRAKE CHAMBER - FRONT AXLE TYPE 24**					
4	**Y2-1225-12**	**BRAKE CHAMBER - FRONT AXLE TYPE 27**					
5	641564	VALVE, DOUBLE CHECK DC-4	1	1	1	1	
6	640870	VALVE / SPRING BRAKE SR-1 To 5-8358	1	1	1	1	
. NS	640921	. REPAIR KIT / SR-1 To 5-8358	1	1	1	1	
6	287234	PRESSURE SWITCH N.C. 30-10 20PS001AB030E010E From 5-8359	2	2	2	2	
7	641429	VALVE, QUICK RELEASE QR-1 / 3/8NPTx3/8NPTx3/8NPT	1	1	1	1	
. NS	640924	. REPAIR KIT / QR-1	1	1	1	1	
8	641903	HOSE BRAKE #8 1090MM (43")			2		
9	641951	VALVE, "ABS" 12VOLT	4	4	4	4	
10	**Y2-0750-01**	**AUTOMATIC TRANSMISSION - "WORLD" WITH DETROIT S-60**					
11	**Y2-1225-11**	**BRAKE CHAMBER - FRONT AXLE TYPE 24**					
11	**Y2-1225-12**	**BRAKE CHAMBER - FRONT AXLE TYPE 27**					
12	641583	AIR TANK / 1508 IN° / 9" 1/2 O.D. X 24"	2				
13	141834	AIR TANK / 1303 IN° / 8" O.D. X 27"1/2			2		
14	**Y2-1202-00**	**TUBES PLASTIC / AIR D.O.T.**					
15	**Y2-1215-10**	**AIR DRYER - "HALDEX" - INSTALLATION**					
16	140869	AIR TANK / 1791 IN° / 9 1/2" O.D. X 27"	2	2	2	2	
17	70307176	AIR TANK / 281 IN° / 6" O.D. X 12"	1	1	1	1	
18	640442	VALVE, INVERSION TR-2	1	1	1	1	
19	641120	VALVE, RELAY R-14 HORIZONTAL PORT To 5-8358	1	1	1	1	
. NS	10508267	. KIT, REPAIR To 5-8358	1	1	1	1	
19	642015	VALVE / SPRING BRAKE SR-7 From 5-8359	1	1	1	1	
19	643385	KIT CHECK VALVE CONVERSION SR-7	1	1	1	1	
19	643384	VALVE / SPRING BRAKE SR-7	1	1	1	1	
. NS	642119	. VALVE / SPRING BRAKE SR-7	1	1	1	1	
20	641136	ANCHOR TEE / PIPE FITTING / 3/8NPT-Fx3/8NPT-Fx3/8NPT-F ZP	2	2	2	2	
21	641903	HOSE BRAKE #8 1090MM (43")	2	2	2	2	
22	642067	VALVE, RELAY R-12 HORIZONTAL PORT	2	2	2	2	
23	**Y2-1235-10**	**BRAKE CHAMBER - DRIVE AXLE "KNORR-BREMSE"**					
24	642013	VALVE, RELAY R-12 DC To 5-8358	1	1	1	1	
24	641991	VALVE, RELAY R-14 "WABCO" From 5-8359	1	1	1	1	
25	**Y2-1215-12**	**AIR DRYER - INSTALLATION**					
26	641908	HOSE BRAKE #8 1300MM (51")	2				
27	641305	HOSE BRAKE #8 718MM (28 1/4")	1				
27	641305	HOSE BRAKE #8 718MM (28 1/4")			2		
28	**Y2-1245-10**	**BRAKE CHAMBER - TAG AXLE TYPE 16/16**					

From Y-7046 To 7-9095		Date:07/2024	PAGE:Y2-1200-00

BRAKE AIR SYSTEM

Item#	Part	Description	XLII 45	XLII MTH40	XLII MTH45	XLII MTH45E	NOTES
29	641302	HOSE BRAKE #8 610MM (24")	1				
30	504499	CUFF END BELLOW / 2 7/8" I.D. x 3 5/8" x 4 7/16	1	1	1	1	
31	141567	PROTECTOR RUBBER 100MM	1	1	1	1	
NS	509558	WEATHERSEAL SNAP-ON 1/8" / SINGLE LIP / WH / C.T.L.	AR	AR	AR	AR	
32	**Y2-1205-11**	**AIR COMPRESSOR - "BA921" - WITH DETROIT S-60**					
33	**Y2-1630-00**	**FRONT KNEELING - CONTROL PANEL To 2-7799**					
33	**Y2-1630-01**	**FRONT KNEELING - CONTROL PANEL From 2-7800 To 5-8558**					
33	**Y2-1630-02**	**FRONT KNEELING - CONTROL PANEL From 5-8559**					
34	**Y2-1640-50**	**LEVEL-LOW - CONTROL PANEL & VALVES To 2-7799**					
34	**Y2-1640-51**	**LEVEL-LOW - CONTROL PANEL & VALVES From 2-7800 To 5-8558**					
34	**Y2-1640-52**	**LEVEL-LOW - CONTROL PANEL & VALVES From 5-8559**					
35	641303	HOSE BRAKE #8 914MM (36") To 5-8358	1	1	1	1	
35	642020	HOSE BRAKE #8 914MM (36") From 5-8359	1	1	1	1	
36	641305	HOSE BRAKE #8 718MM (28 1/4") To 5-8358	1	1	1	1	
36	642019	HOSE BRAKE #8 718MM (28 1/4") From 5-8359	1	1	1	1	
37	032428	AIR TANK / 61 IN° / 6" O.D. X 4"			1		
40	640488	VALVE, AIR FILL 1/8" NPT	1	1	1	1	
. NS	650164	. CAP VALVE / CHROME	1	1	1	1	
41	5011129	NEEDLE VALVE 1/4 NPT M x 1/4 NPT F	1	1	1	1	

From Y-7046 To 6-8906		Date:07/2024	PAGE:Y2-1200-05
PARKING BRAKE OVERRULE			

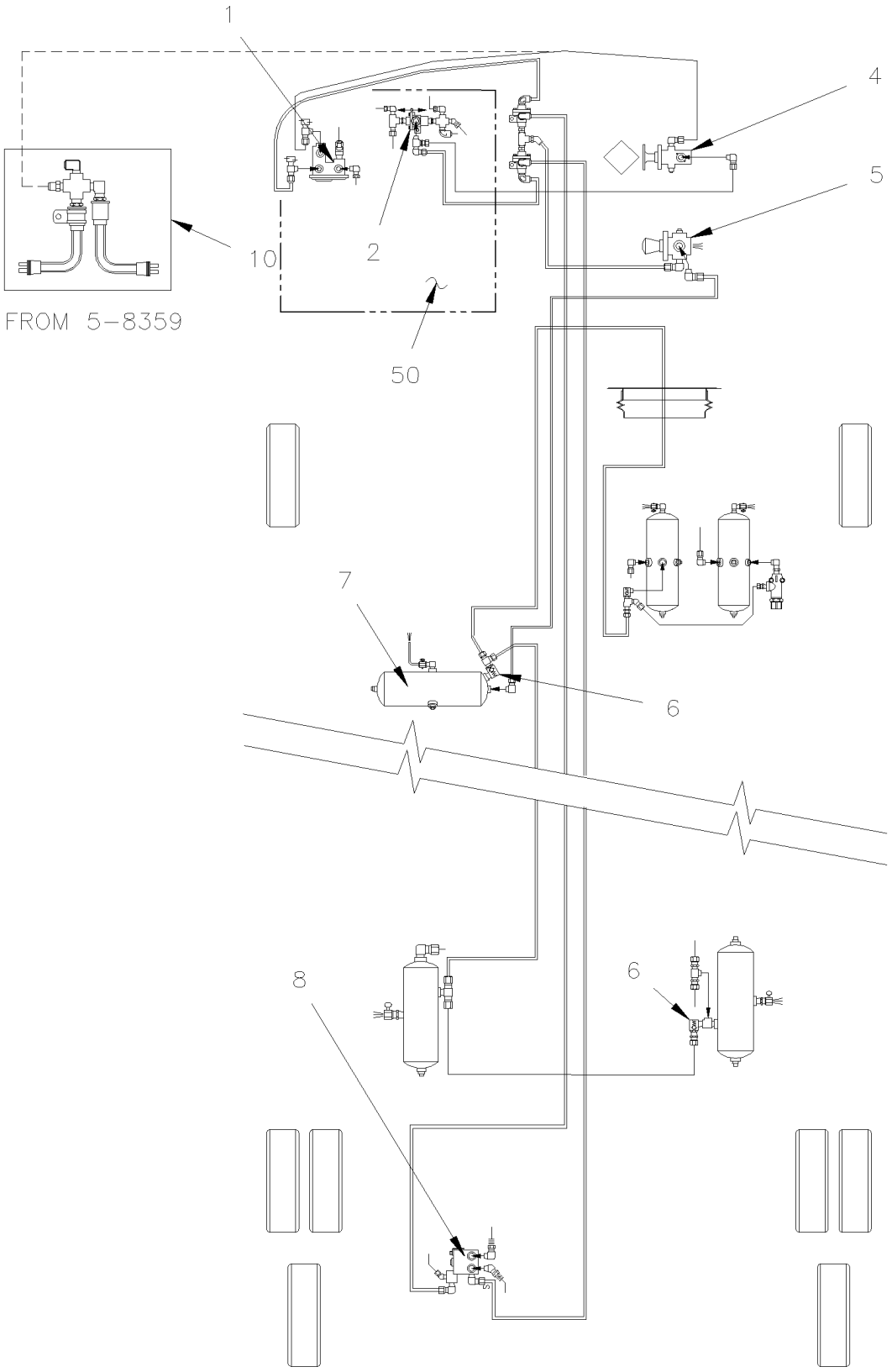

From Y-7046 To 6-8906		Date:07/2024	PAGE:Y2-1200-05
PARKING BRAKE OVERRULE			

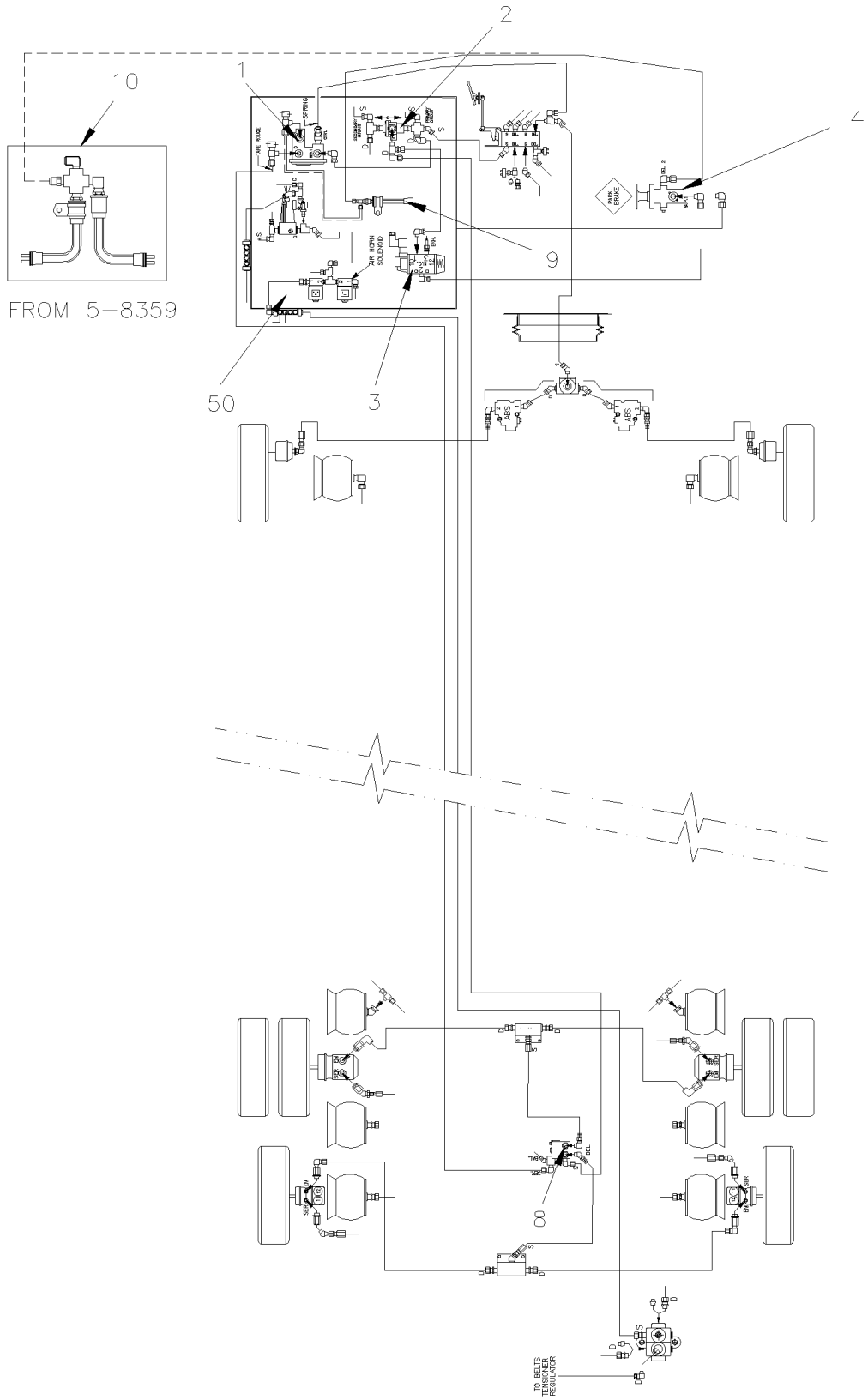

From Y-7046 To 6-8906		Date:07/2024	PAGE:Y2-1200-05
PARKING BRAKE OVERRULE			

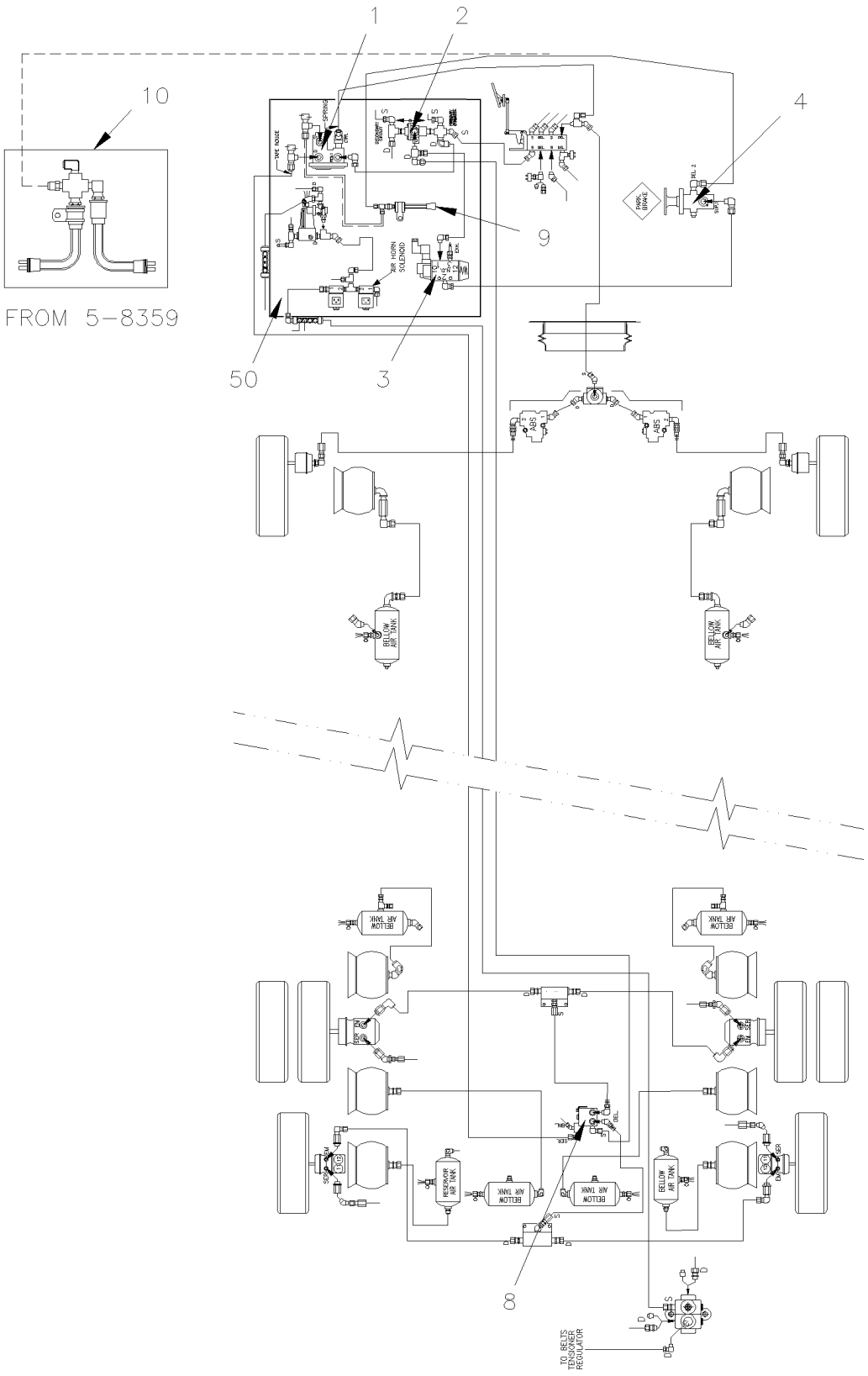

From Y-7046 To 6-8906		Date:07/2024	PAGE:Y2-1200-05

PARKING BRAKE OVERRULE

Item#	Part	Description	XLII 45	XLII MTH40	XLII MTH45	XLII MTH45E	NOTES
1	640870	VALVE / SPRING BRAKE SR-1 To 5-8358	1				
. NS	640921	. REPAIR KIT / SR-1 To 5-8358	1				
2	641564	VALVE, DOUBLE CHECK DC-4	1				
3	641528	VALVE, 3 WAYS, 2 POSITIONS N.O.	1				
. NS	641929	. COIL 24V	1				
. NS	641169	. SPOOL	1				
. NS	641385	. CONNECTOR / SOCKET HOUSING ASSY 3C / PNEUMAC 54934-01	1				
4	641128	VALVE, CONTROL VALVE PP-1 / 40PSI	1				
. NS	641154	. REPAIR KIT / PP-1 & RD-3	1				
5	640472	VALVE, CONTROL / RD-3	1				
. NS	641154	. REPAIR KIT / PP-1 & RD-3	1				
6	641172	VALVE, CHECK ELBOW 90º 1/2 NPT	2				
7	641411	AIR TANK / 2370 IN° / 12" O.D. X 24"	1				
7	641583	AIR TANK / 1508 IN° / 9" 1/2 O.D. X 24"	1				
8	641120	VALVE, RELAY R-14 HORIZONTAL PORT To 5-8358	1				
. NS	10508267	. KIT, REPAIR To 5-8358	1				
8	642015	VALVE / SPRING BRAKE SR-7 From 5-8359	1				
8	643385	KIT CHECK VALVE CONVERSION SR-7	1				
8	643384	VALVE / SPRING BRAKE SR-7	1				
. NS	642119	. VALVE / SPRING BRAKE SR-7	1				
9	452082	PRESSURE SWITCH N.O. 30-15 20SP001AA030C015C To 5-8358	1				
10	287234	PRESSURE SWITCH N.C. 30-10 20PS001AB030E010E From 5-8359	1				
50	**Y2-1630-00**	**FRONT KNEELING - CONTROL PANEL To 2-7799**					
50	**Y2-1630-01**	**FRONT KNEELING - CONTROL PANEL From 2-7800 To 5-8558**					
50	**Y2-1630-02**	**FRONT KNEELING - CONTROL PANEL From 5-8559**					

From 7-9096 To 8-9339		Date:07/2024	PAGE:Y2-1200-50
BRAKE AIR SYSTEM - MTH			

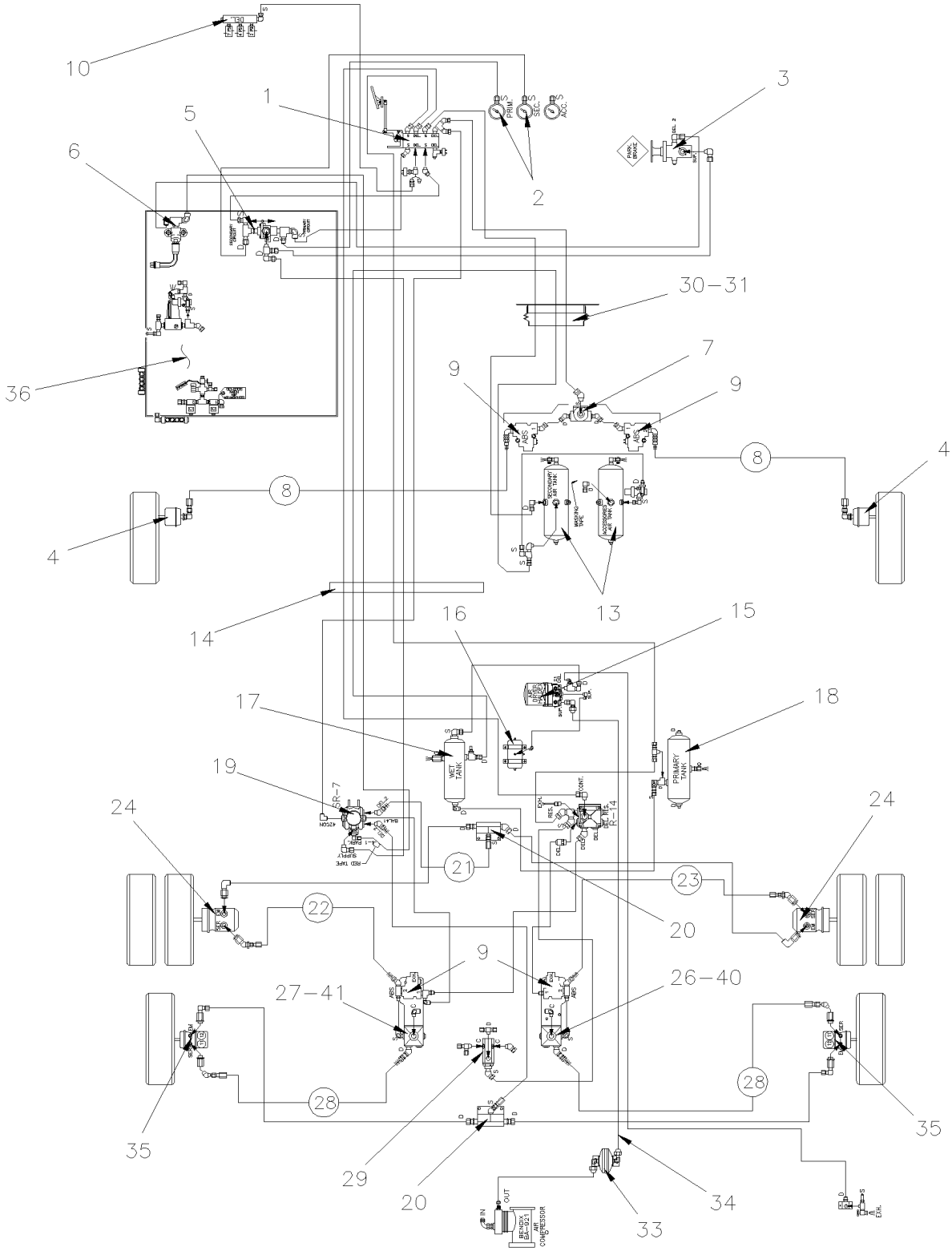

From 7-9096 To 8-9339		Date:07/2024	PAGE:Y2-1200-50
BRAKE AIR SYSTEM - MTH			

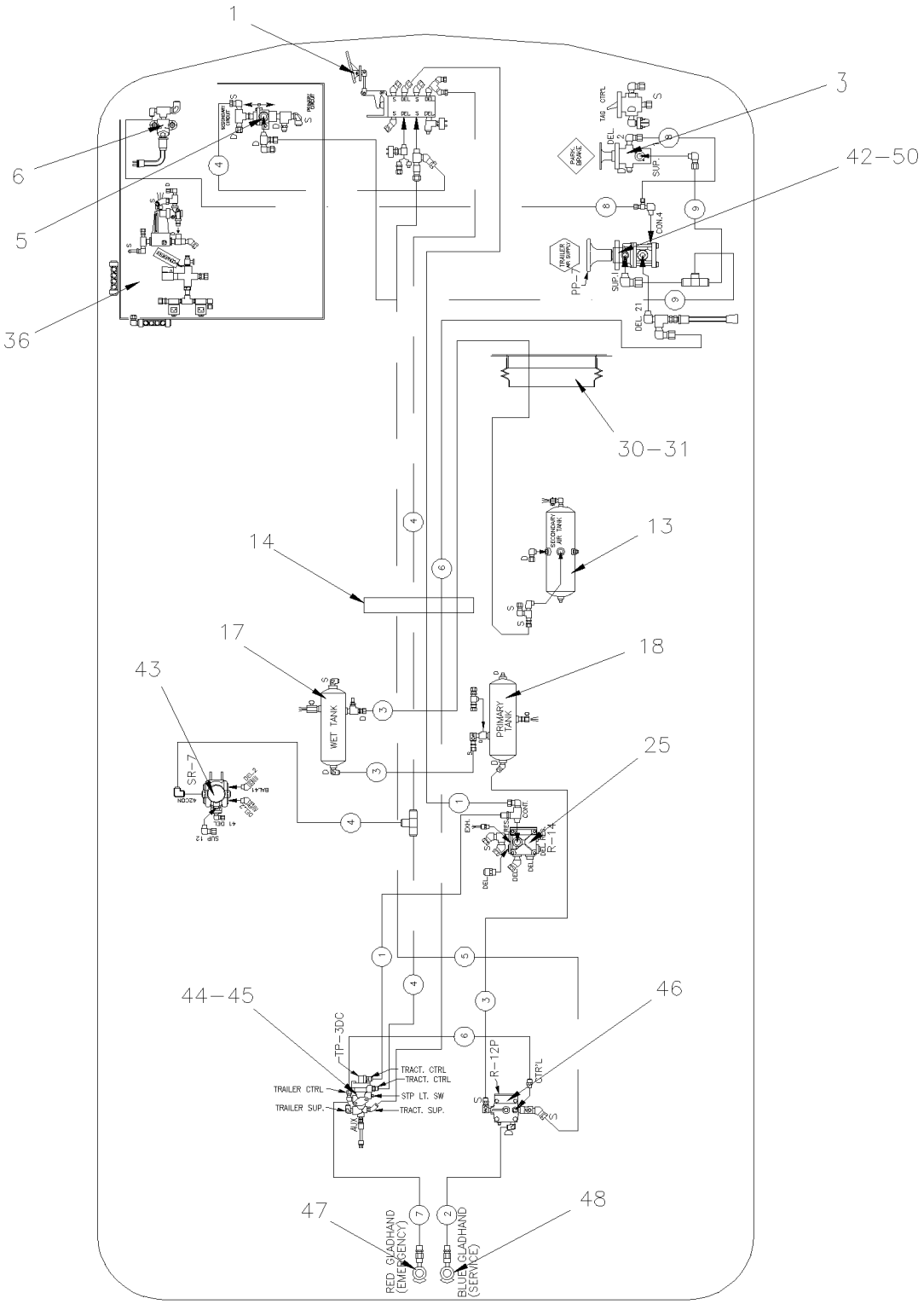

MTH–40' & MTH 45 ENT
WITH OPTION TRAILER HITCH AIR BRAKE

From 7-9096 To 8-9339		Date:07/2024	PAGE:Y2-1200-50

BRAKE AIR SYSTEM - MTH

Item#	Part	Description	XLII 45	XLII MTH40	XLII MTH45	XLII MTH45E	NOTES
1	**Y2-1220-10**	**BRAKE PEDAL VALVE - "BENDIX"**					
2	**Y2-0645-20**	**CENTER DASHBOARD PANEL**					
3	641128	VALVE, CONTROL VALVE PP-1 / 40PSI		1		1	
. NS	641154	. REPAIR KIT / PP-1 & RD-3		1		1	
4	**Y2-1225-12**	**BRAKE CHAMBER - FRONT AXLE TYPE 27**					
5	641564	VALVE, DOUBLE CHECK DC-4		1		1	
6	287234	PRESSURE SWITCH N.C. 30-10 20PS001AB030E010E		1		1	
7	641429	VALVE, QUICK RELEASE QR-1 / 3/8NPTx3/8NPTx3/8NPT		1		1	
. NS	640924	. REPAIR KIT / QR-1		1		1	
8	641903	HOSE BRAKE #8 1090MM (43")		2		2	
9	641951	VALVE, "ABS" 12VOLT		4		4	
10	**Y2-0750-01**	**AUTOMATIC TRANSMISSION - "WORLD" WITH DETROIT S-60**					
11	**Y2-1225-12**	**BRAKE CHAMBER - FRONT AXLE TYPE 27**					
12	641583	AIR TANK / 1508 IN° / 9" 1/2 O.D. X 24"		1		1	
13	141834	AIR TANK / 1303 IN° / 8" O.D. X 27"1/2		1		1	
14	**Y2-1202-00**	**TUBES PLASTIC / AIR D.O.T.**					
15	**Y2-1215-10**	**AIR DRYER - "HALDEX" - INSTALLATION**					
16	70307176	AIR TANK / 281 IN° / 6" O.D. X 12"		1		1	
17	144848	AIR TANK / 1791 IN° / 9 1/2" O.D. X 27"		1		1	
18	140869	AIR TANK / 1791 IN° / 9 1/2" O.D. X 27"		1		1	
19	642015	VALVE / SPRING BRAKE SR-7		1		1	
19	643385	KIT CHECK VALVE CONVERSION SR-7		1		1	
192	643384	VALVE / SPRING BRAKE SR-7		1		1	
. NS	642119	. VALVE / SPRING BRAKE SR-7		1		1	
20	641136	ANCHOR TEE / PIPE FITTING / 3/8NPT-Fx3/8NPT-Fx3/8NPT-F ZP		1		1	
21	642019	HOSE BRAKE #8 718MM (28 1/4")		1		1	
22	641302	HOSE BRAKE #8 610MM (24")		1		1	
23	641305	HOSE BRAKE #8 718MM (28 1/4")		1		1	
24	**Y2-1235-10**	**BRAKE CHAMBER - DRIVE AXLE "KNORR-BREMSE"**					
25	641991	VALVE, RELAY R-14 "WABCO"		1		1	
26	641088	VALVE, RELAY R-12 HORIZONTAL PORT		1		1	
26	642067	VALVE, RELAY R-12 HORIZONTAL PORT		1		1	
27	642068	VALVE, RELAY R-12 HORIZONTAL PORT / W/OUT SUPPORT		1		1	
28	641902	HOSE BRAKE #8 737MM (29")		2		2	
29	640442	VALVE, INVERSION TR-2		1		1	
30	504499	CUFF END BELLOW / 2 7/8" I.D. x 3 5/8" x 4 7/16		1		1	
31	141567	PROTECTOR RUBBER 100MM		1		1	
32	**Y2-1205-11**	**AIR COMPRESSOR - "BA921" - WITH DETROIT S-60**					
33	032428	AIR TANK / 61 IN° / 6" O.D. X 4"		1		1	
34	142550	HOSE ASSY TEFLON #12 2593MM TO VERIFIED		1		1	
35	**Y2-1245-11**	**BRAKE CHAMBER - TAG AXLE TYPE 14/16 To 8-9278**					
35	**Y2-1245-12**	**BRAKE CHAMBER - TAG AXLE TYPE 14 & 16 From 8-9279**					

From 7-9096 To 8-9339		Date:07/2024	PAGE:Y2-1200-50

BRAKE AIR SYSTEM - MTH

Item#	Part	Description	XLII 45	XLII MTH40	XLII MTH45	XLII MTH45E	NOTES
36	**Y2-1640-52**	**LEVEL-LOW - CONTROL PANEL & VALVES**					
40	144861	SUPPORT R.H. / VALVE ABS & RELAY VALVE		1		1	
41	144862	SUPPORT L.H. / VALVE ABS & RELAY VALVE		1		1	
42	641397	TRAILER SUPPLY VALVE PP-7		1		1	
43	642015	VALVE / SPRING BRAKE SR-7		1		1	
43	643385	KIT CHECK VALVE CONVERSION SR-7		1		1	
43	643384	VALVE / SPRING BRAKE SR-7		1		1	
. NS	642119	. VALVE / SPRING BRAKE SR-7		1		1	
44	641495	TRACTOR PROTECTION VALVE TP-3 DC		1		1	
45	950245	PRESSURE SWITCH N.C. 20-30 LO-UNLOAD W/WIRE BLACK		1		1	
46	641399	VALVE, RELAY R-12 P SUPPERSEEDED 642097		1		1	
47	641938	GLANDHAND W/DUST COVER "RED"		1		1	
48	641939	GLANDHAND W/DUST COVER "BLUE"		1		1	
50	**Y2-1806-10**	**L.H. CONSOLE - BUS**					

From Y-7046 To 8-9339		Date:07/2024	PAGE:Y2-1201-00
FITTING - MISCELLANEOUS			

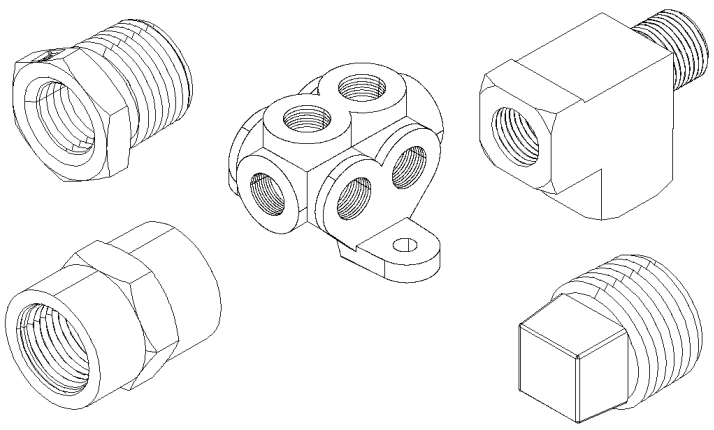

FITTING PIPE ''NPT''
1

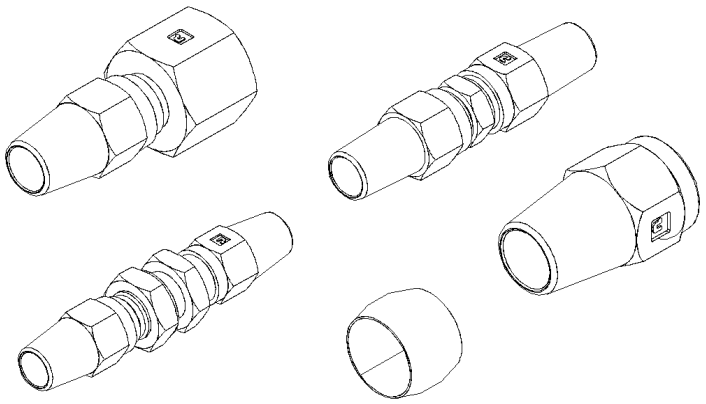

FITTING BRAKE ''AB''
2

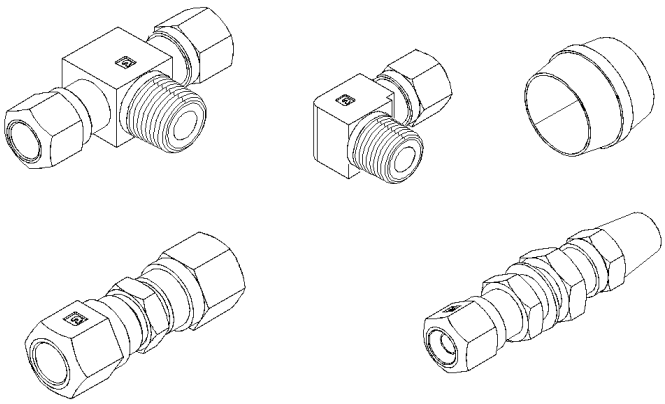

FITTING BRAKE ''NTA''
3

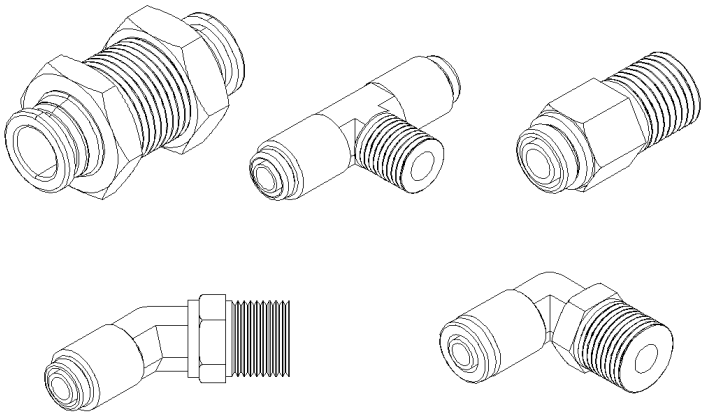

FITTING BRAKE ''PUSH-IN''
4

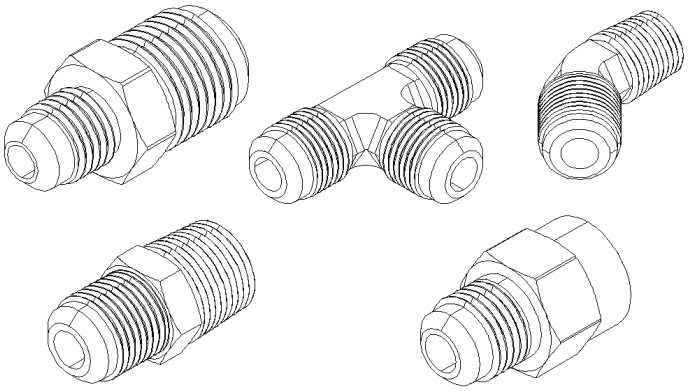

FITTING ''SAE 45°''
5

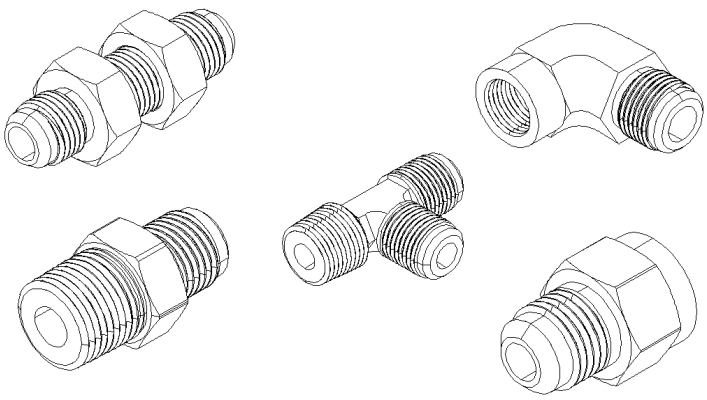

FITTING ''JIC 37°''
6

From Y-7046 To 8-9339		Date:07/2024	PAGE:Y2-1201-00
FITTING - MISCELLANEOUS			

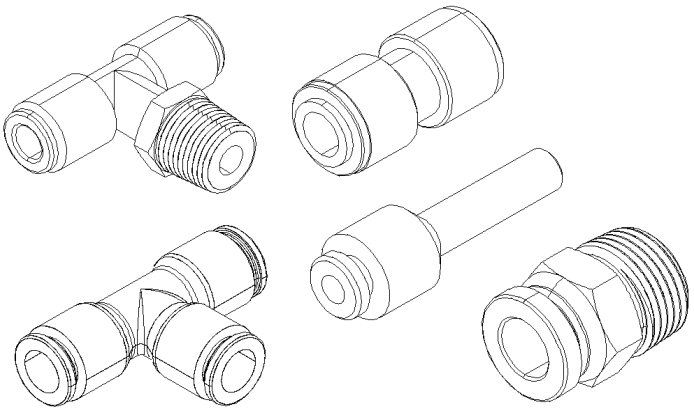

FITTING ''PUSH-IN''
7

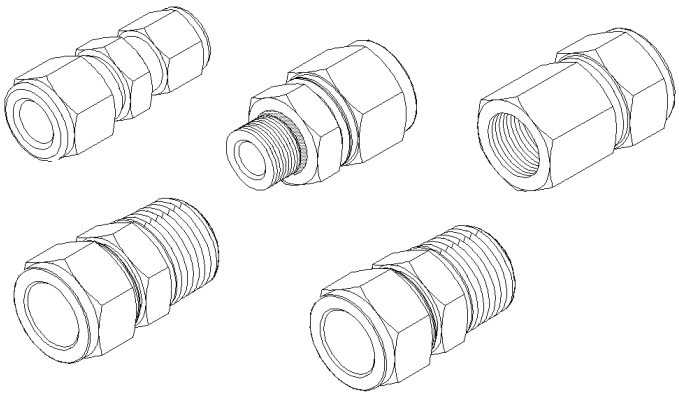

FITTING ''A-LOK''
8

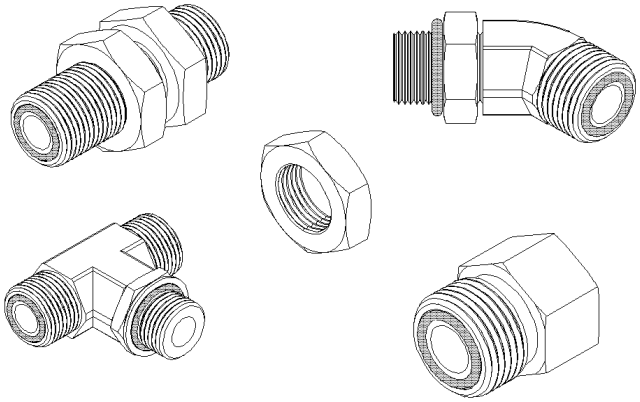

FITTING ''ORS''
9

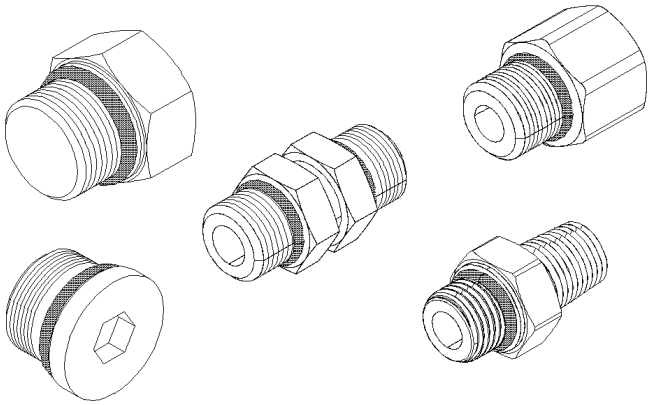

FITTING ''ORB''
10

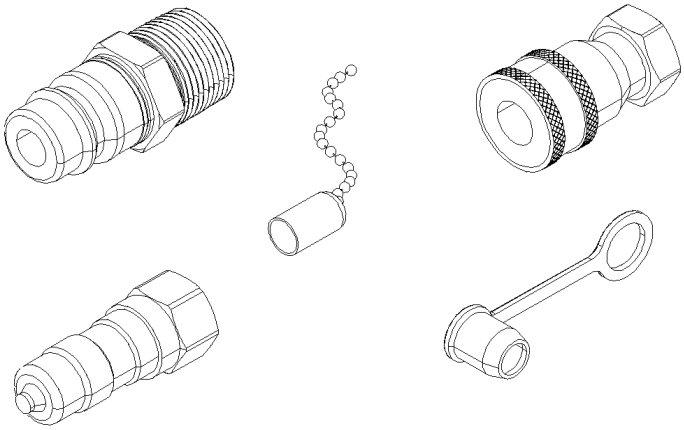

FITTING ''QUICK DISCONNECT''
11

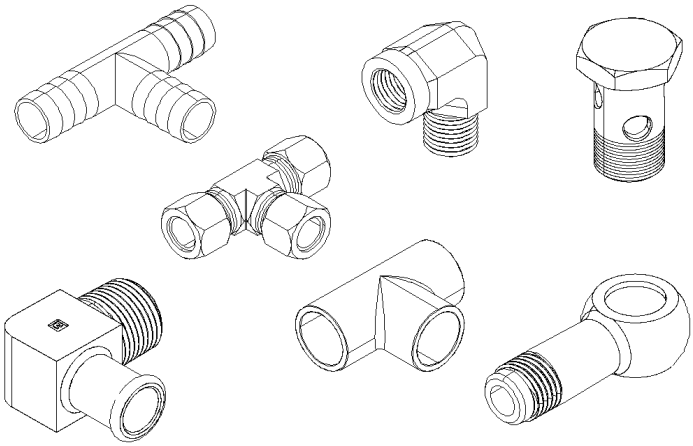

FITTING ''MISCELANOUS''
12

From Y-7046 To 8-9339		Date:07/2024	PAGE:Y2-1201-00
FITTING - MISCELLANEOUS			

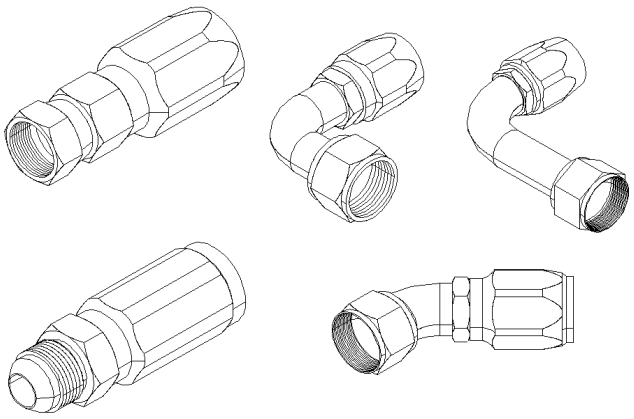

FITTING "HOSE END REUSABLE"
13

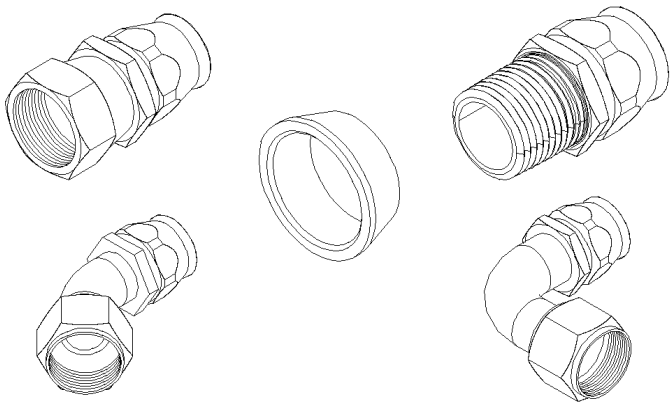

FITTING "HOSE END REUSABLE"
TEFLON
14

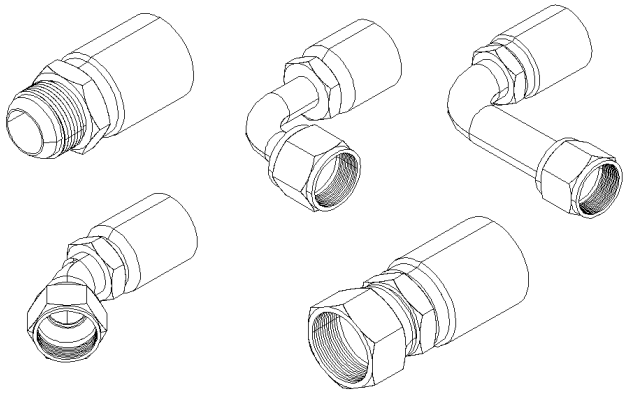

FITTING "HOSE END CRIMP"
15

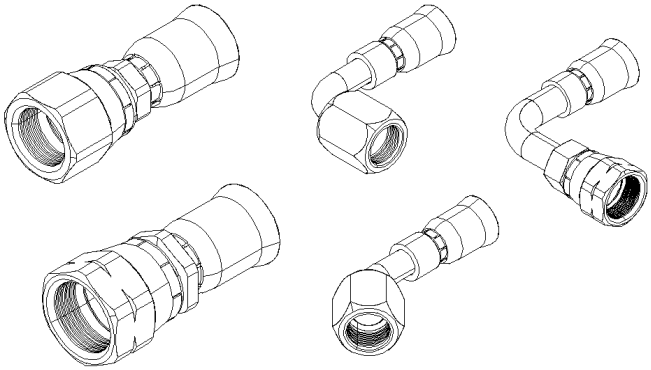

FITTING "HOSE END CRIMP"
TEFLON
16

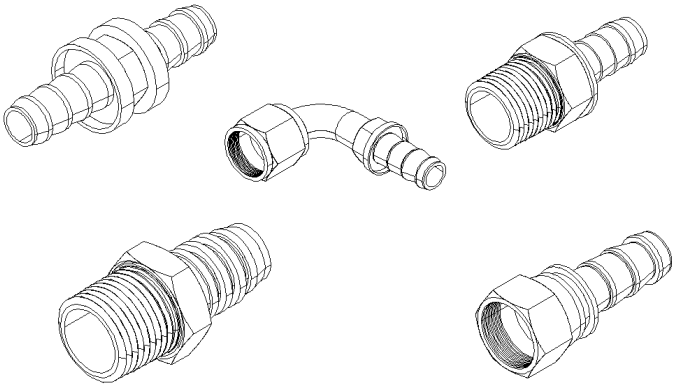

FITTING "HOSE END"
"PUSH-LOK & COLLAR"
17

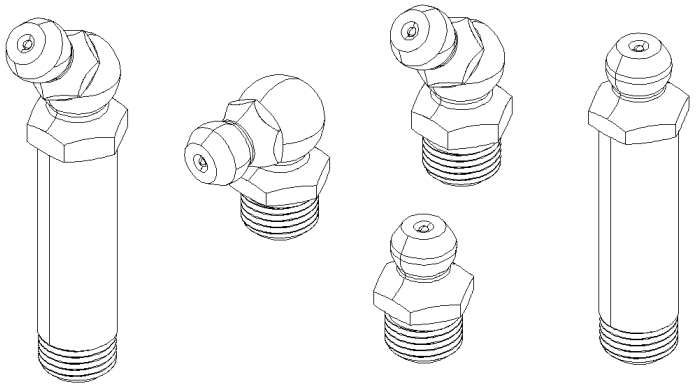

FITTING "GREASE"
30

From Y-7046 To 8-9339		Date:07/2024	PAGE:Y2-1201-00

FITTING - MISCELLANEOUS

Item#	Part	Description	XLII 45	XLII MTH40	XLII MTH45	XLII MTH45E	NOTES
		. . . . BRAKE					
1	**FM-00FM-00**	**FITTING NPT PIPE - MISCELANOUS**					
2	**FM-00FM-01**	**FITTING BRAKE "AB" - MISCELANOUS (D.O.T.)**					
3	**FM-00FM-02**	**FITTING BRAKE "NTA" - MISCELANOUS (D.O.T.)**					
4	**FM-00FM-03**	**FITTING BRAKE "PUSH-IN" - MISCELANOUS (D.O.T.)**					
		. . . . SAE & JIC					
5	**FM-00FM-04**	**FITTING "SAE 45º" - MISCELANOUS**					
6	**FM-00FM-05**	**FITTING "JIC 37º" - MISCELANOUS**					
7	**FM-00FM-06**	**FITTING "PUSH-IN" - MISCELANOUS**					
8	**FM-00FM-07**	**FITTING "A-LOK" - MISCELANOUS (SWAGLELOK)**					
		. . . . ORS & ORB					
9	**FM-00FM-08**	**FITTING "ORS" - MISCELANOUS**					
10	**FM-00FM-09**	**FITTING "ORB" - MISCELANOUS**					
		. . . . QUICK DISCONNECT					
11	**FM-00FM-10**	**FITTING "QUICK DISCONNECT" - MISCELANOUS**					
12	**FM-00FM-11**	**FITTING "MISCELANOUS"**					
		. . . . HOSE END FITTING					
13	**FM-00FM-12**	**FITTING "HOSE END REUSABLE" - MISCELANOUS**					
14	**FM-00FM-13**	**FITTING "HOSE END REUSABLE TEFLON" - MISCELANOUS**					
15	**FM-00FM-14**	**FITTING "HOSE END CRIMP" - MISCELANOUS**					
16	**FM-00FM-15**	**FITTING "HOSE END CRIMP TEFLON" - MISCELANOUS**					
17	**FM-00FM-16**	**FITTING "HOSE END" - "PUSH-LOK & COLLAR"**					
30	**FM-00GF-00**	**GREASE FITTING**					

From Y-7046 To 8-9339		Date:07/2024	PAGE:Y2-1202-00
TUBES PLASTIC / AIR D.O.T.			

From Y-7046 To 8-9339		Date:07/2024	PAGE:Y2-1202-00

TUBES PLASTIC / AIR D.O.T.

Item#	Part	Description	XLII 45	XLII MTH40	XLII MTH45	XLII MTH45E	NOTES
	503747	TUBE, NYLON 6MM O.D. / BLACK S.L.					
	503529	TUBE, NYLON 8MM O.D. / BLACK S.L.					
	503563	TUBE, NYLON 6MM O.D. / WHITE S.L.					
	503566	TUBE, NYLON 1/4 O.D. / BLUE S.L.					
	503471	TUBE, NYLON 3/8 O.D. / BLUE S.L.					
	503517	TUBE, NYLON 1/2 O.D. / BLUE S.L.					
	503536	TUBE, NYLON 1/8 O.D. / BLACK S.L.					
	503402	TUBE, NYLON 1/4 O.D. / BLACK S.L.					
	503404	TUBE, NYLON 3/8 O.D. / BLACK S.L.					
	503488	TUBE, NYLON 1/2 O.D. / BLACK S.L./					
	503540	TUBE, NYLON 5/8 O.D. / BLACK S.L.					
	503541	TUBE, NYLON 3/4" O.D. / BLACK S.L					
	503548	TUBE, NYLON 1/4 O.D. / YELLOW S.L.					
	503470	TUBE, NYLON 3/8 O.D. / YELLOW S.L.					
	503533	TUBE, NYLON 1/2 O.D. / YELLOW S.L.					
. NS	19514092	. TUBE, NYLON 1/2 O.D. / YELLOW / 100FT ROLL					
	503466	TUBE, NYLON 1/4 O.D. / RED S.L.					
	503467	TUBE, NYLON 3/8 O.D. / RED S.L.					
	503468	TUBE, NYLON 1/2 O.D. / RED S.L.					
	503469	TUBE, NYLON 5/8 O.D. / RED S.L.					
	503464	TUBE, NYLON 1/4 O.D. / GREEN S.L.					
	503463	TUBE, NYLON 3/8 O.D. / GREEN S.L.					
	503406	TUBE, NYLON 1/2 O.D. / GREEN S.L.					
	503408	TUBE, NYLON 5/8 O.D. / GREEN S.L.					
	503465	TUBE, NYLON 3/4 O.D. / GREEN S.L.					
	503472	TUBE, NYLON 3/8 O.D. / GREY S.L.					
	503638	TUBE, NYLON 1/2 O.D. / BROWN S.L.					
NS	683355	TOOL PLASTIC TUBE CUTTER / PLASTIC	1	1	1	1	
NS	681625	TOOL PLASTIC TUBE CUTTER / METAL	1	1	1	1	

From Y-7046 To 2-7799		Date:07/2024	PAGE:Y2-1203-00
AIR TANK - INSTALLATION			

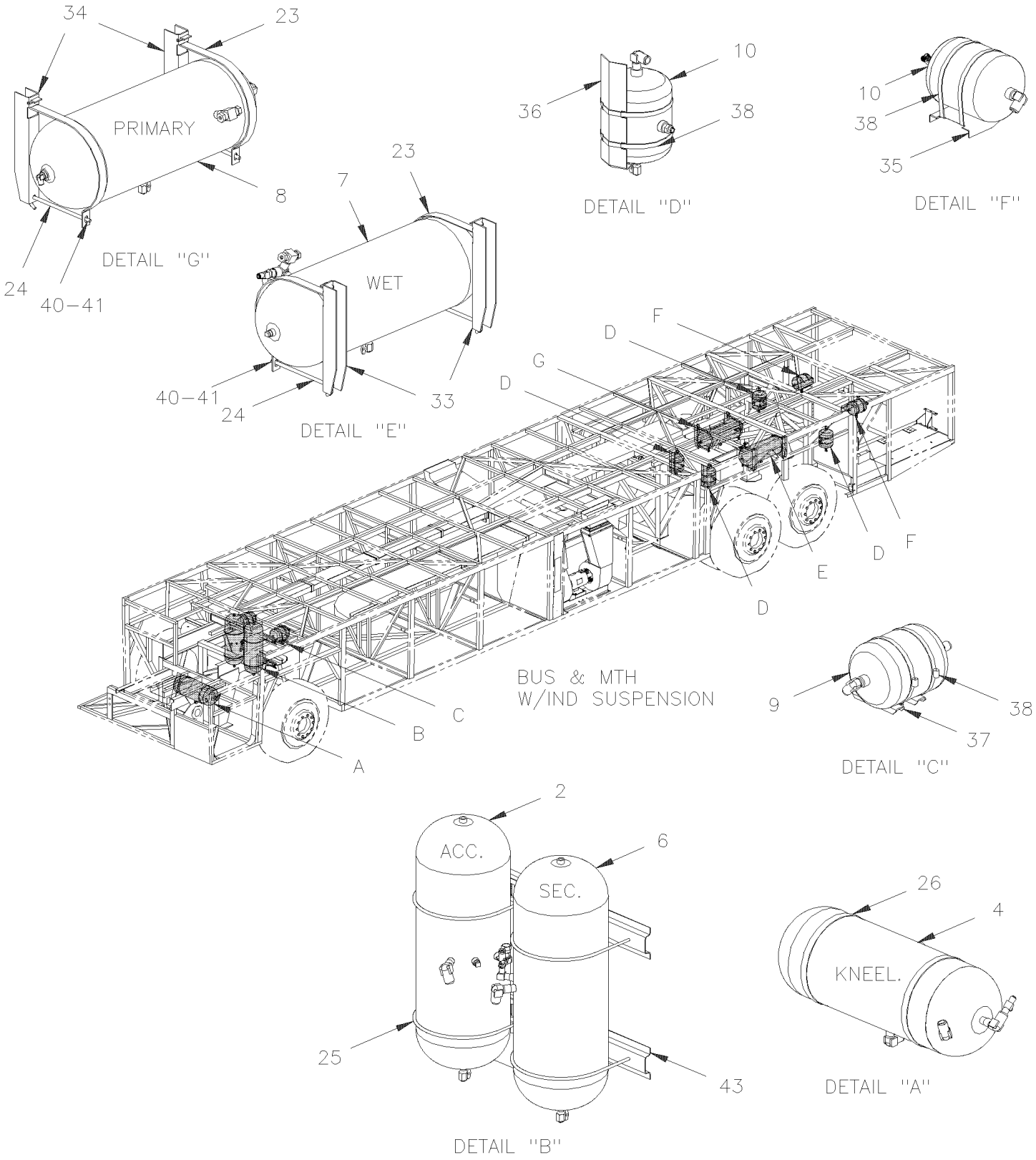

From Y-7046 To 2-7799		Date:07/2024	PAGE:Y2-1203-00
AIR TANK - INSTALLATION			

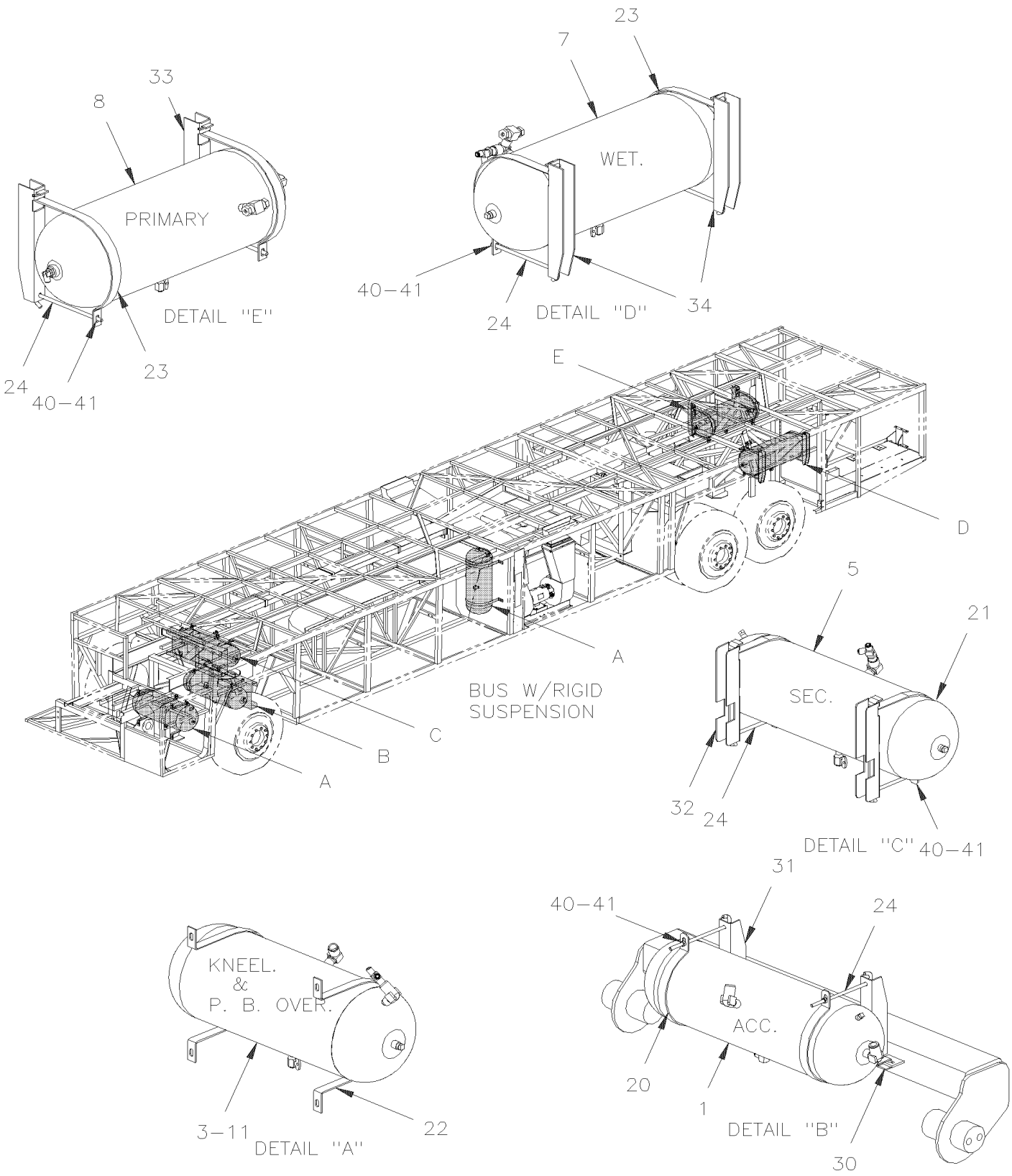

From Y-7046 To 2-7799		Date:07/2024	PAGE:Y2-1203-00

AIR TANK - INSTALLATION

Item#	Part	Description	XLII 45	XLII MTH40	XLII MTH45	XLII MTH45E	NOTES
		ACCESSORIES AIR TANK					
1	641583	AIR TANK / 1508 IN° / 9" 1/2 O.D. X 24"	1				
2	141834	AIR TANK / 1303 IN° / 8" O.D. X 27"1/2	1	1	1	1	
NS	641137	VALVE, PRESSURE PROTECTION TYPE PR-4 70PSI	1	1	1	1	
		KNEELING AIR TANK					
3	641411	AIR TANK / 2370 IN° / 12" O.D. X 24"	1				
4	140868	AIR TANK / W/END LOWER DRAIN 1228 IN° / 8" O.D. X 26" To Y-7235	1				
4	641583	AIR TANK / 1508 IN° / 9" 1/2 O.D. X 24" From Y-7236	1				
		SECONDARY AIR TANK					
5	641583	AIR TANK / 1508 IN° / 9" 1/2 O.D. X 24"	1				
6	141834	AIR TANK / 1303 IN° / 8" O.D. X 27"1/2	1	1	1	1	
		WET AIR TANK					
7	140869	AIR TANK / 1791 IN° / 9 1/2" O.D. X 27"	1	1	1	1	
		PRIMARY AIR TANK					
8	140869	AIR TANK / 1791 IN° / 9 1/2" O.D. X 27"	1	1	1	1	
		AIR BELLOW EXPANSION TANK					
9	131403	AIR TANK / 434 IN° / 7" O.D. X 13 1/4"	2	2	2	2	
10	641424	AIR TANK / 288 IN° / 7" O.D. X 9 1/4" / W/(3) 1/2" NPT		6	6	6	
		PARKING BRAKE OVERULE					
11	641583	AIR TANK / 1508 IN° / 9" 1/2 O.D. X 24"	1				
20	142100	STRAP / TO USE W/9" O.D. TANK / "J" SHAPE	2				
21	142029	STRAP / TO USE W/9"1/2 O.D. TANK / "J" SHAPE	2				
22	131590	STRAP / TO USE W/12" O.D. TANK / "U" SHAPE	2	2	2	2	
23	141816	STRAP / TO USE W/9"1/2 O.D. TANK / "J" SHAPE	4	4	4	4	
24	141409	J-HOOK / 220 MM / M8-1.25 SS	4	4	4	4	
25	141835	ROD / TO USE W/8" O.D. TANK / "U" SHAPE	4				
26	131523	STRAP / TO USE W/8" O.D. TANK / "O" SHAPE To Y-7235	2				
26	131610	STRAP / TO USE W/9"1/2 O.D. TANK / "O" SHAPE From Y-7236	2				

From Y-7046 To 2-7799		Date:07/2024	PAGE:Y2-1203-00

AIR TANK - INSTALLATION

Item#	Part	Description	XLII 45	XLII MTH40	XLII MTH45	XLII MTH45E	NOTES
30	141649	ATTACHMENT / (WELDED TO FRAME)	2				
31	172489	SUPPORT AIR TANK / WELDED TO STRUCTURE	2				
32	172478	SUPPORT / SECONDAIRY AIR TANK / (WELDED TO FRAME)	2				
33	172147	SUPPORT "U" / AIR TANK / 263MM	2	2	2	2	
34	171600	SUPPORT "U" / AIR TANK / 250MM	2	2	2	2	
35	171974	SUPPORT / (WELDED TO FRAME)	2	2	2	2	
36	171973	SUPPORT AIR TANK	2	2	2	2	
37	131378	SUPPORT / (WELDED TO FRAME)	2	2	2	2	
38	504649	HOSE CLAMP / 4"5/8-7"1/2 SS	4	4	4	4	
40	500868	NUT HEX NYRT M8-1.25 Z050	2	2	2	2	
41	500874	WASHER FL 8.4x17.0x1.6 Z050	AR	AR	AR	AR	
42	502600	NUT HEX NYRT 5/16-18 Z050	AR	AR	AR	AR	
43	500778	NUT HEX 5/16-18 N500	AR	AR	AR	AR	
44	500476	WASHER LO SPT .317x.586x.078 Z050	AR	AR	AR	AR	
45	5001319	SCREW CAP HEX M8-1.25x40 SS	2				

From 2-7800 To 8-9339		Date:07/2024	PAGE:Y2-1203-01

AIR TANK - INSTALLATION

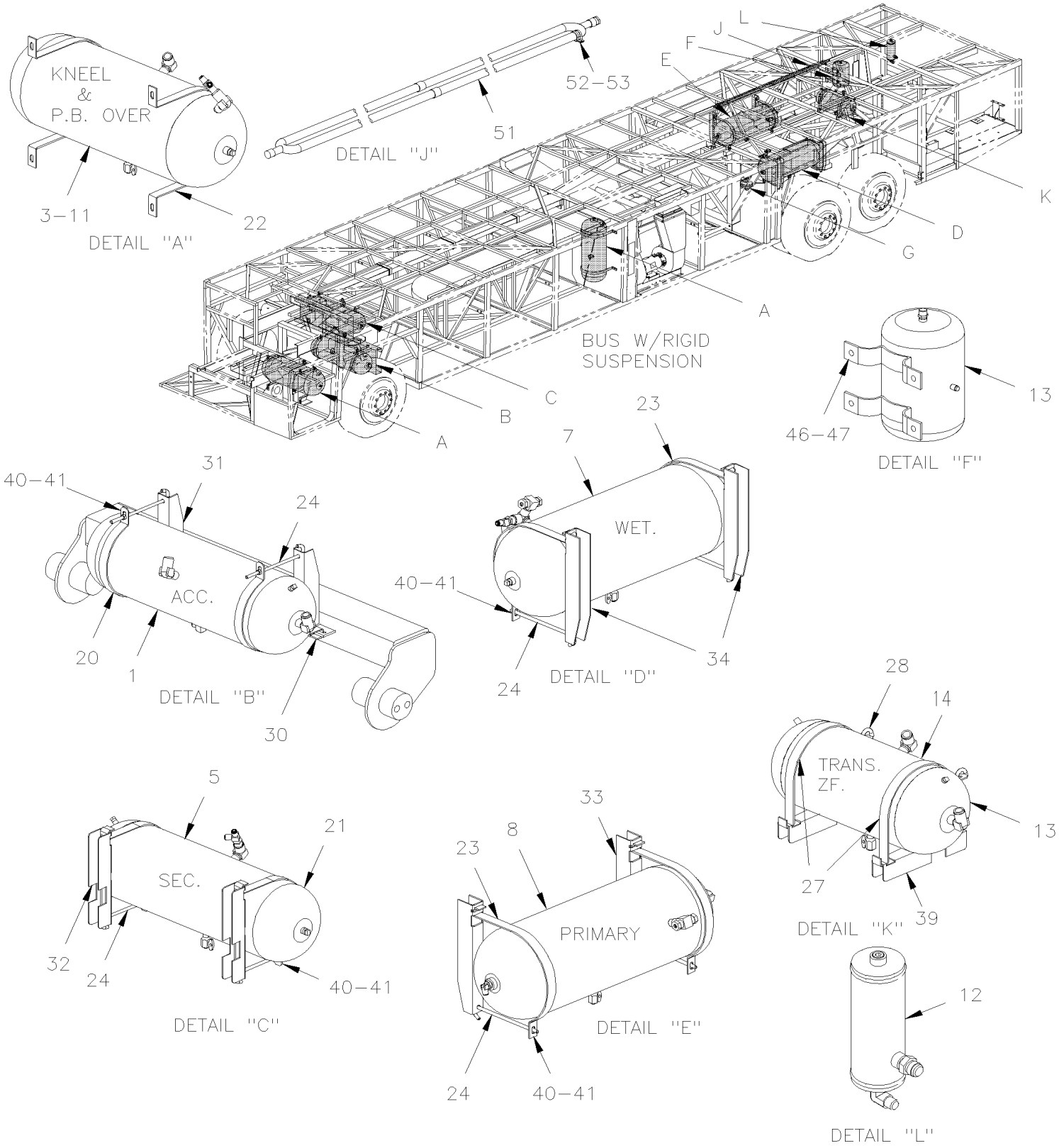

From 2-7800 To 8-9339		Date:07/2024	PAGE:Y2-1203-01

AIR TANK - INSTALLATION

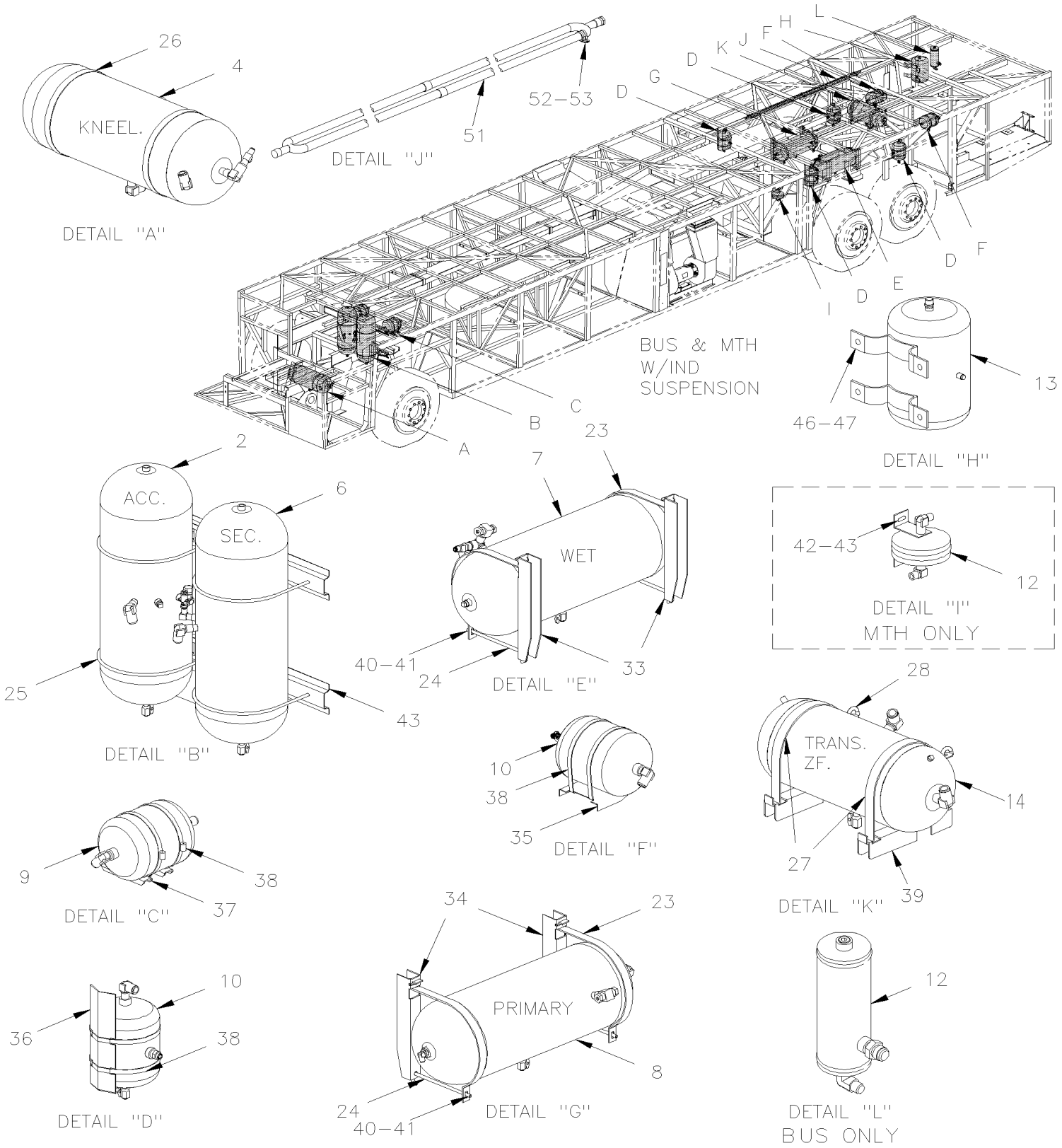

From 2-7800 To 8-9339		Date:07/2024	PAGE:Y2-1203-01

AIR TANK - INSTALLATION

Item#	Part	Description	XLII 45	XLII MTH40	XLII MTH45	XLII MTH45E	NOTES
		ACCESSORIES AIR TANK					
1	641583	AIR TANK / 1508 IN° / 9" 1/2 O.D. X 24"	1				
2	141834	AIR TANK / 1303 IN° / 8" O.D. X 27"1/2	1	1	1	1	
NS	641137	VALVE, PRESSURE PROTECTION TYPE PR-4 70PSI	1	1	1	1	
		KNEELING AIR TANK					
3	641411	AIR TANK / 2370 IN° / 12" O.D. X 24"	1				
4	641583	AIR TANK / 1508 IN° / 9" 1/2 O.D. X 24"	1				
		SECONDARY AIR TANK					
5	641583	AIR TANK / 1508 IN° / 9" 1/2 O.D. X 24"	1				
6	141834	AIR TANK / 1303 IN° / 8" O.D. X 27"1/2	1	1	1	1	
		WET AIR TANK					
7	140869	AIR TANK / 1791 IN° / 9 1/2" O.D. X 27"	1		1		
7	140869	AIR TANK / 1791 IN° / 9 1/2" O.D. X 27" To 7-9095		1		1	
7	144848	AIR TANK / 1791 IN° / 9 1/2" O.D. X 27" From 7-9096		1		1	
NS	642022	SAFETY VALVE 150 PSI X 3/8 NPT / ST-3	1	1	1	1	
		PRIMARY AIR TANK					
8	140869	AIR TANK / 1791 IN° / 9 1/2" O.D. X 27"	1	1	1	1	
		AIR BELLOW EXPANSION TANK					
9	131403	AIR TANK / 434 IN° / 7" O.D. X 13 1/4"	2	2	2	2	
10	641424	AIR TANK / 288 IN° / 7" O.D. X 9 1/4" / W/(3) 1/2" NPT	6	6	6	6	
10	642110	AIR TANK / 290 IN° / 6" O.D. X 12" / W/(3) 1/2" NPT From 7-9096	6			6	
		PARKING BRAKE OVERULE					
11	641583	AIR TANK / 1508 IN° / 9" 1/2 O.D. X 24"	1				
		PING AIR TANK					
12	032428	AIR TANK / 61 IN° / 6" O.D. X 4"		1	1	1	
NS	142221	HOSE ASSY TEFLON #12 1805MM			1		A

From 2-7800 To 8-9339		Date:07/2024	PAGE:Y2-1203-01

AIR TANK - INSTALLATION

Item#	Part	Description	XLII 45	XLII MTH40	XLII MTH45	XLII MTH45E	NOTES
12	142222	HOSE ASSY TEFLON #12 1175MM		1		1	A
12	142277	HOSE ASSY TEFLON #12 970MM From 4-8165	1				A
12	641982	AIR TANK / 96 IN° / 3 1/2" O.D. X 10" From 4-8165	1				
		PURGE TANK					
13	70307176	AIR TANK / 281 IN° / 6" O.D. X 12"	1	1	1	1	
NS	142195	HOSE ASSY TEFLON #12 3275MM	1	1	1	1	B
13	**Y2-1215-10**	**AIR DRYER - "HALDEX" - INSTALLATION**					
		MANUAL TRANSMISSION "ZF" AIR TANK					
14	641978	AIR TANK / 610 IN° / 7" O.D.X 18"	1				
20	142100	STRAP / TO USE W/9" O.D. TANK / "J" SHAPE	2				
21	142029	STRAP / TO USE W/9"1/2 O.D. TANK / "J" SHAPE	2				
22	131590	STRAP / TO USE W/12" O.D. TANK / "U" SHAPE	2	2	2	2	
23	141816	STRAP / TO USE W/9"1/2 O.D. TANK / "J" SHAPE	4	4	4	4	
24	141409	J-HOOK / 220 MM / M8-1.25 SS	4	4	4	4	
25	141835	ROD / TO USE W/8" O.D. TANK / "U" SHAPE	4				
26	131610	STRAP / TO USE W/9"1/2 O.D. TANK / "O" SHAPE	2				
27	141859	STRAP / TO USE W/8" O.D. TANK / "J" SHAPE	2				
28	141815	J-HOOK / 194 MM / M8-1.25 SS	2				
30	141649	ATTACHMENT / (WELDED TO FRAME)	2				
31	172489	SUPPORT AIR TANK / WELDED TO STRUCTURE	2				
32	172478	SUPPORT / SECONDAIRY AIR TANK / (WELDED TO FRAME)	2				
33	172147	SUPPORT "U" / AIR TANK / 263MM	2	2	2	2	
34	171600	SUPPORT "U" / AIR TANK / 250MM	2	2	2	2	
35	171974	SUPPORT / (WELDED TO FRAME)		2	2	2	
36	171973	SUPPORT AIR TANK		2	2	2	
37	131378	SUPPORT / (WELDED TO FRAME) To 3-8164		2	2	2	
37	131746	SUPPORT AIR TANK / BELLOW From 4-8165 To 5-8805		2	2	2	
37	Call order desk	SUPPORT CURBSIDE From 5-8806		1	1	1	P
37	Call order desk	SUPPORT STREET SIDE From 5-8806		1	1	1	P
38	504649	HOSE CLAMP / 4"5/8-7"1/2 SS		4	4	4	
38	504324	HOSE CLAMP / 4"1/2-6"1/2 SS / HS-96 From 7-9096				4	
39	172727	SUPPORT / (WELDED TO FRAME) To 5-8369	2				
39	172976	SUPPORT / (WELDED TO FRAME) From 5-8370	2				
40	500868	NUT HEX NYRT M8-1.25 Z050	2	2	2	2	
41	500874	WASHER FL 8.4x17.0x1.6 Z050	AR	AR	AR	AR	
42	502600	NUT HEX NYRT 5/16-18 Z050	AR	AR	AR	AR	
43	500778	NUT HEX 5/16-18 N500	AR	AR	AR	AR	

From 2-7800 To 8-9339		Date:07/2024	PAGE:Y2-1203-01

AIR TANK - INSTALLATION

Item#	Part	Description	XLII 45	XLII MTH40	XLII MTH45	XLII MTH45E	NOTES
44	500476	WASHER LO SPT .317x.586x.078 Z050	AR	AR	AR	AR	
45	5001319	SCREW CAP HEX M8-1.25x40 SS	2				
46	500476	WASHER LO SPT .317x.586x.078 Z050	4	4	4	4	
47	500778	NUT HEX 5/16-18 N500	4	4	4	4	
NS	5001164	WASHER FL 8.4x25.0x2.0 Z050	4	4	4	4	
51	142279P	AIR DRYER TUBE ASSY To 3-8164	1				
51	142342P	AIR DRYER TUBE ASSY From 4-8165	1				
52	500613	SCREW TP PAN PH #10x1/2 Z050	AR				
53	952633	CLAMP / 7/8" I.D.	6				
60	**Y2-1215-10**	**AIR DRYER - "HALDEX" - INSTALLATION**					
		A) TO AIR COMPRESSOR					
		B) BETWEEN PING & PURGE TANK					
		P) CALL ORDER DESK FOR SPECIFIC APPLICATION (V.I.N.)					

From Y-7046 To 3-8164		Date:07/2024	PAGE:Y2-1205-10
AIR COMPRESSOR - "TU-FLO 750" - WITH DETROIT S-60			

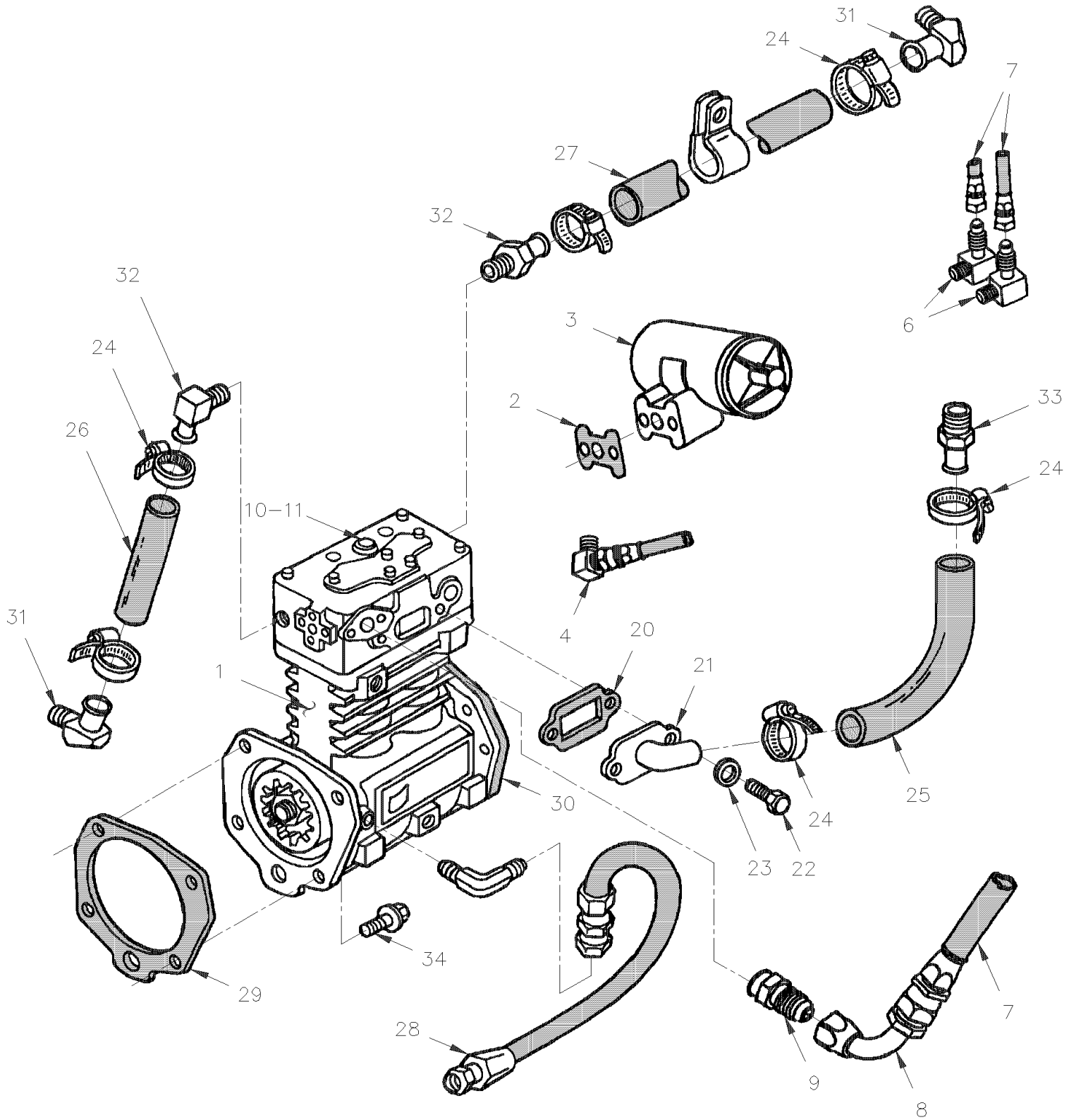

From Y-7046 To 3-8164		Date:07/2024	PAGE:Y2-1205-10

AIR COMPRESSOR - "TU-FLO 750" - WITH DETROIT S-60

Item#	Part	Description	XLII 45	XLII MTH40	XLII MTH45	XLII MTH45E	NOTES
1	641362	COMPRESSOR, AIR (SUPPLY W/ENGINE)	1	1	1	1	
NS	641335	KIT REPAIR, UNLOADER	1	1	1	1	
2	640638	GASKET, AIR GOVERNOR	1	1	1	1	
3	640964	GOVERNOR, AIR / D-2 / (105/125PSI)	1				
. NS	640965	. REPAIR KIT / GOVERNOR D-2	1				
. NS	640638	. GASKET, AIR GOVERNOR	1				
. NS	500187	. SCREW CAP HEX 5/16-18x3 G5 Z050	2				
. NS	500942	. WASHER LO SPT 8.1x14.8x2.0 N500	2				
3	641933	GOVERNOR, AIR / D-2 / (110/130PSI)		1	1	1	
. NS	640965	. REPAIR KIT / GOVERNOR D-2		1	1	1	
. NS	640638	. GASKET, AIR GOVERNOR		1	1	1	
. NS	500187	. SCREW CAP HEX 5/16-18x3 G5 Z050		2	2	2	
. NS	500942	. WASHER LO SPT 8.1x14.8x2.0 N500		2	2	2	
NS	640965	REPAIR KIT / GOVERNOR D-2	1	1	1	1	
NS	500187	SCREW CAP HEX 5/16-18x3 G5 Z050	2	2	2	2	
NS	500476	WASHER LO SPT .317x.586x.078 Z050	2	2	2	2	
4	640996	MALE ELBOW 90º / NTA FITTING / #4x1/8NPT-M BR	1	1	1	1	
6	501036	MALE ELBOW 90º / SAE 45º FITTING / #4FL-Mx1/8NPT-M BR	2	2	2	2	
7	**Y2-1215-00**	**AIR DRYER - "BENDIX" AD-9**					
7	**Y2-1215-01**	**AIR DRYER - "ROCKWELL WABCO"**					
8	507544	SWIVEL NUT ELBOW 90º SHORT / JIC 37° FITTING/ #12JIC-Fx#12JIC-Mx1.82 STL	1	1	1	1	
9	501600	MALE CONNECTOR / JIC 37° FITTING / #12JIC-Mx1/2NPT-M STL	1	1	1	1	
10	501316	BUSHING REDUCER / PIPE FITTING / 1/2NPT-Mx1/4NPT-F BR	1	1	1	1	
11	501037	MALE ELBOW 90º / SAE 45º FITTING / #4FL-Mx1/4NPT-M BR	1	1	1	1	
20	640256	GASKET, ADAPTOR AIR INLET	1	1	1	1	A
21	N.S.P.	ADAPTOR AIR INLET / (23506346)	1	1	1	1	2 A
22	500179	SCREW CAP HEX 5/16-18x3/4 G5 Z050	2	2	2	2	A
23	500476	WASHER LO SPT .317x.586x.078 Z050	2	2	2	2	A
24	504019	HOSE CLAMP / 9/16"-1"1/16 SS / HS-10	6	6	6	6	A
25	N.S.P.	HOSE SILICONE 75MM X 18" / (23508340)	1	1	1	1	2 A
26	N.S.P.	HOSE SILICONE 3/4" X 3.1/2" / (8929764)	1	1	1	1	2 A
27	N.S.P.	HOSE SILICONE 3/4" X 28" / (23509550)	1	1	1	1	2 A
NS	503523	HOSE SILICONE 1PLY 3/4" I.D. x 100' / S.L.	AR	AR	AR	AR	A
28	N.S.P.	HOSE ASSY 14 7/8" / OIL FEED FROM GALLERY / (23505202)	1	1	1	1	2 A
28	N.S.P.	HOSE ASSY TEFLON / OIL TO ALTERNATOR / (23504343)	1	1	1	1	2 A
29	510615	GASKET COMPRESSOR	1	1	1	1	A
30	N.S.P.	GASKET / COMPRESSOR & FUEL PUMP / (23505248)	1	1	1	1	2 A
31	N.S.P.	ELBOW 45° 3/4" HOSE / (23505202)	2	2	2	2	2 A
32	N.S.P.	ELBOW 90° 3/4 TUBE 1/2" NPT / (8929749)	2	2	2	2	2 A
33	N.S.P.	CONNECTOR / (23506345)	1	1	1	1	2 A
34	N.S.P.	BOLT M12-1.75 X 47MM FLANGE HEAD	4	4	4	4	2 A

From Y-7046 To 3-8164		Date:07/2024	PAGE:Y2-1205-10

AIR COMPRESSOR - "TU-FLO 750" - WITH DETROIT S-60

Item#	Part	Description	XLII 45	XLII MTH40	XLII MTH45	XLII MTH45E	NOTES
		A) THOSE ITEMS ARE SUPPLIED WITH ENGINE ASSY SEE YOUR DETROIT DIESEL DEALER FOR INFORMATIONS.					
		2) NOT SOLD BY PREVOST (SEE MANUFACTURING PART NUMBER AT END OF DESCRIPTION LINE)					

From 4-8165 To 8-9339		Date:07/2024	PAGE:Y2-1205-11
AIR COMPRESSOR - "BA921" - WITH DETROIT S-60			

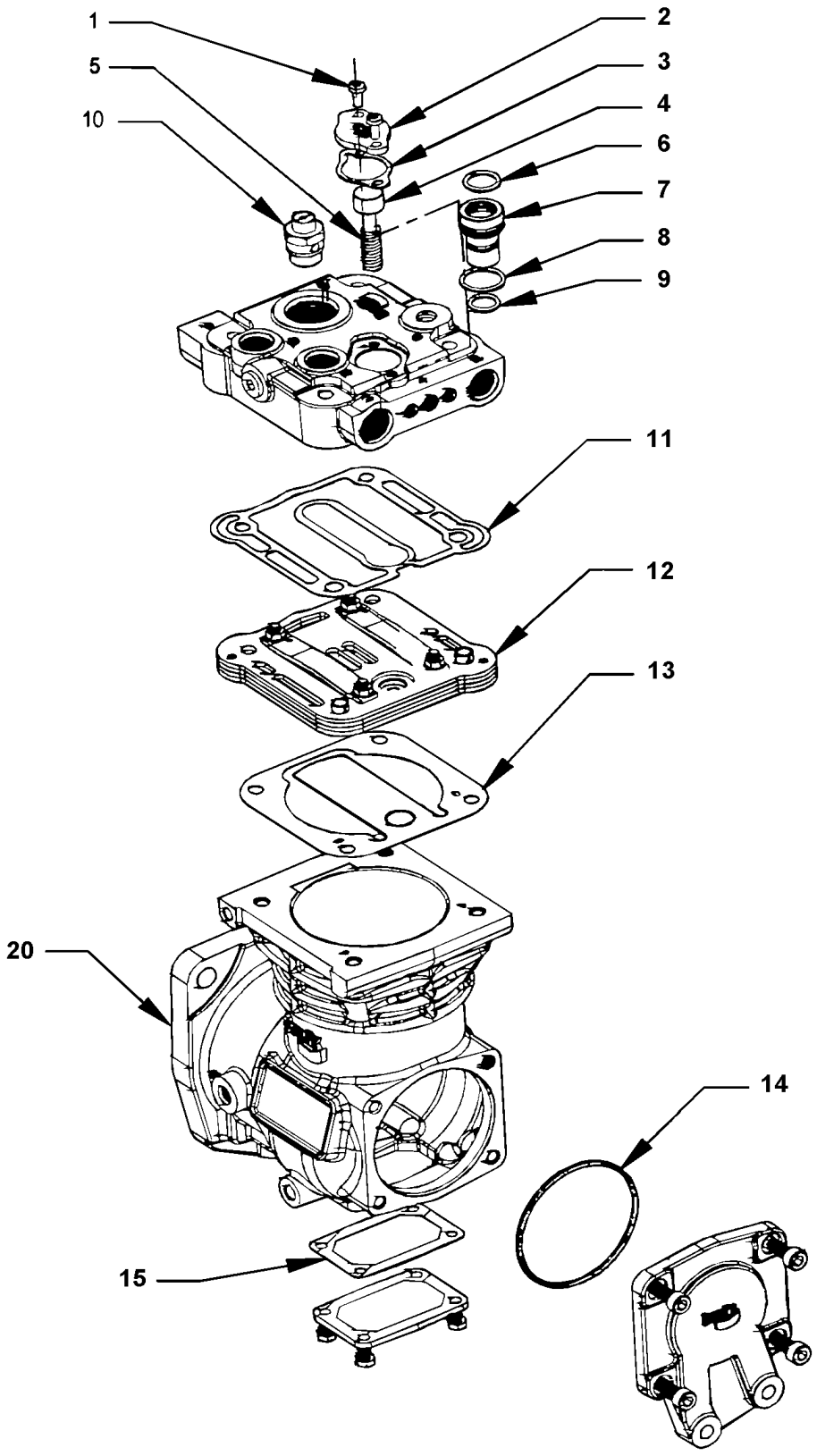

From 4-8165 To 8-9339		Date:07/2024	PAGE:Y2-1205-11

AIR COMPRESSOR - "BA921" - WITH DETROIT S-60

Item#	Part	Description	XLII 45	XLII MTH40	XLII MTH45	XLII MTH45E	NOTES
1	641990	COMPRESSOR, AIR (SUPPLY W/ENGINE)	1	1	1	1	
2	N.S.S.	. COVER	1	1	1	1	1 A
3	N.S.S.	. GASKET	1	1	1	1	1 A
4	N.S.S.	. BALANCE PISTON	1	1	1	1	1 A
5	N.S.S.	. SPRING	1	1	1	1	1 A
6	N.S.S.	. O-RING	1	1	1	1	1 A
7	N.S.S.	. PISTON	1	1	1	1	1 A
8	N.S.S.	. O-RING	1	1	1	1	1 A
9	N.S.S.	. O-RING	1	1	1	1	1 A
10	641989	. SAFETY VALVE ST-A / M16x1.5	1	1	1	1	
11	641986	. CYLINER HEAD SEAL KIT	1	1	1	1	B
12		. REED VALVE ASSY	1	1	1	1	
13		. INLET REED VALVE GASKET	1	1	1	1	
14	641987	. COMPRESSOR SEAL KIT	1	1	1	1	C
15		. BOTTOM COVER	1	1	1	1	
20	641988	. ENGINE INTERFACE SEAL KIT	1	1	1	1	D
		A) NOT REQUIRE WITH AIR DRYER "HALDEX"					
		B) INCLUDES ITEMS# 11 & 13					
		C) INCLUDES ITEMS# 14 & 20					
		D) USE ONLY WITH VEHICLE EQUIPPED WITH AIR DRYER AD-9					
		1) NOT SOLD SEPARATELY					

From Y-7046 To 2-7799		Date:07/2024	PAGE:Y2-1215-00
AIR DRYER - "BENDIX" AD-9			

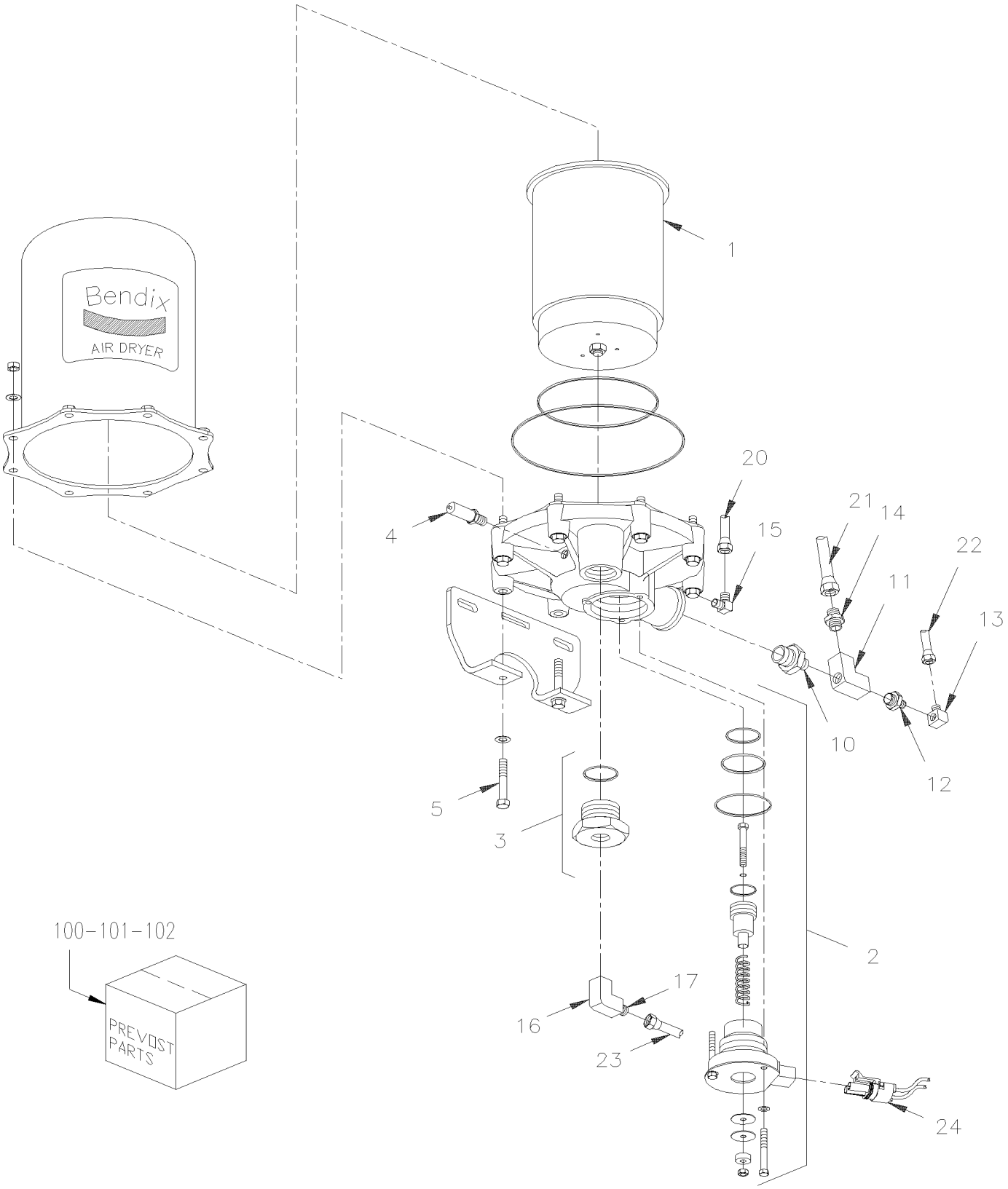

From Y-7046 To 2-7799		Date:07/2024	PAGE:Y2-1215-00

AIR DRYER - "BENDIX" AD-9

Item#	Part	Description	XLII 45	XLII MTH40	XLII MTH45	XLII MTH45E	NOTES
	641243	AIR DRYER ASSY AD-9 24 VOLTS	1				
1	641244	. DESICANT CARTRIDGE / "BENDIX" AD-9	1				
. NS	MI04-12	. . SEE MAINTENANCE INFORMATION	1				
2	641245	. PURGE VALVE ASSY W/HEATER	1				
3	641246	. CHECK VALVE MAINTENANCE KIT 3/4 NPT	1				
4	N.S.P.	. SAFETY VALVE (285849)	1				2
5	5001173	. SCREW CAP HEX 5/16-18x4 1/2 G8 ZP	2				
10	501462	BUSHING REDUCER / PIPE FITTING / 3/4NTP-Mx1/2NPT-F BR	1				
11	507556	MALE BRANCHE TEE / PIPE FITTING / 1/2NPT-Fx1/2NPT-Fx1/2NPT-M BR	1				
12	501316	BUSHING REDUCER / PIPE FITTING / 1/2NPT-Mx1/4NPT-F BR	1				
13	641371	MALE ELBOW 90° NON-SWIVEL / PUSH-IN FITTING / #4x1/4NPT-M BR	1				
14	501600	MALE CONNECTOR / JIC 37° FITTING / #12JIC-Mx1/2NPT-M STL	1				
15	501037	MALE ELBOW 90º / SAE 45º FITTING / #4FL-Mx1/4NPT-M BR	1				
16	507339	STREET ELBOW 90º / PIPE FITTING / 3/4NPT-Mx3/4NPT-F BR	1				
17	641029	MALE CONNECTOR / NTA FITTING / #12x3/4NPT-M BR	1				
20	141888	HOSE ASSY TEFLON #4 4431MM	1				A
21	141830	HOSE ASSY TEFLON #12 4157MM	1				C
22	503402	TUBE, NYLON 1/4 O.D. / BLACK S.L.	AR				
23	503465	TUBE, NYLON 3/4 O.D. / GREEN S.L.	AR				
24	562251	CONNECTOR / METRI-PACK 280 / SH 2C / PED 12020599	1				
NS	562287	SECONDARY LOCK / METRI-PACK 280 / 2C / BLACK / PED 12034446	1				
NS	562101	SOCKET TERMINAL / 14-12 / PED 12129493	2				
NS	562106	SEAL CONNECTOR / METRI-PACK / 3C / BLACK / PED 12048370	2				
100	641464	PURGE VALVE ASSY W/HEATER 24V	1				
. NS	109579	. HEATER ELEMENT 24V -109579	1				
101	109579	HEATER ELEMENT 24V -109579	1				
102	641358	KIT REPAIR / PURGE VALVE	1				
		A) DRYER & GOVERNOR					
		C) DRYER & COMPRESSOR					
		2) NOT SOLD BY PREVOST (SEE MANUFACTURING PART NUMBER AT END OF DESCRIPTION LINE)					

From Y-7046 To 2-7799		Date:07/2024	PAGE:Y2-1215-01
AIR DRYER - "ROCKWELL WABCO"			

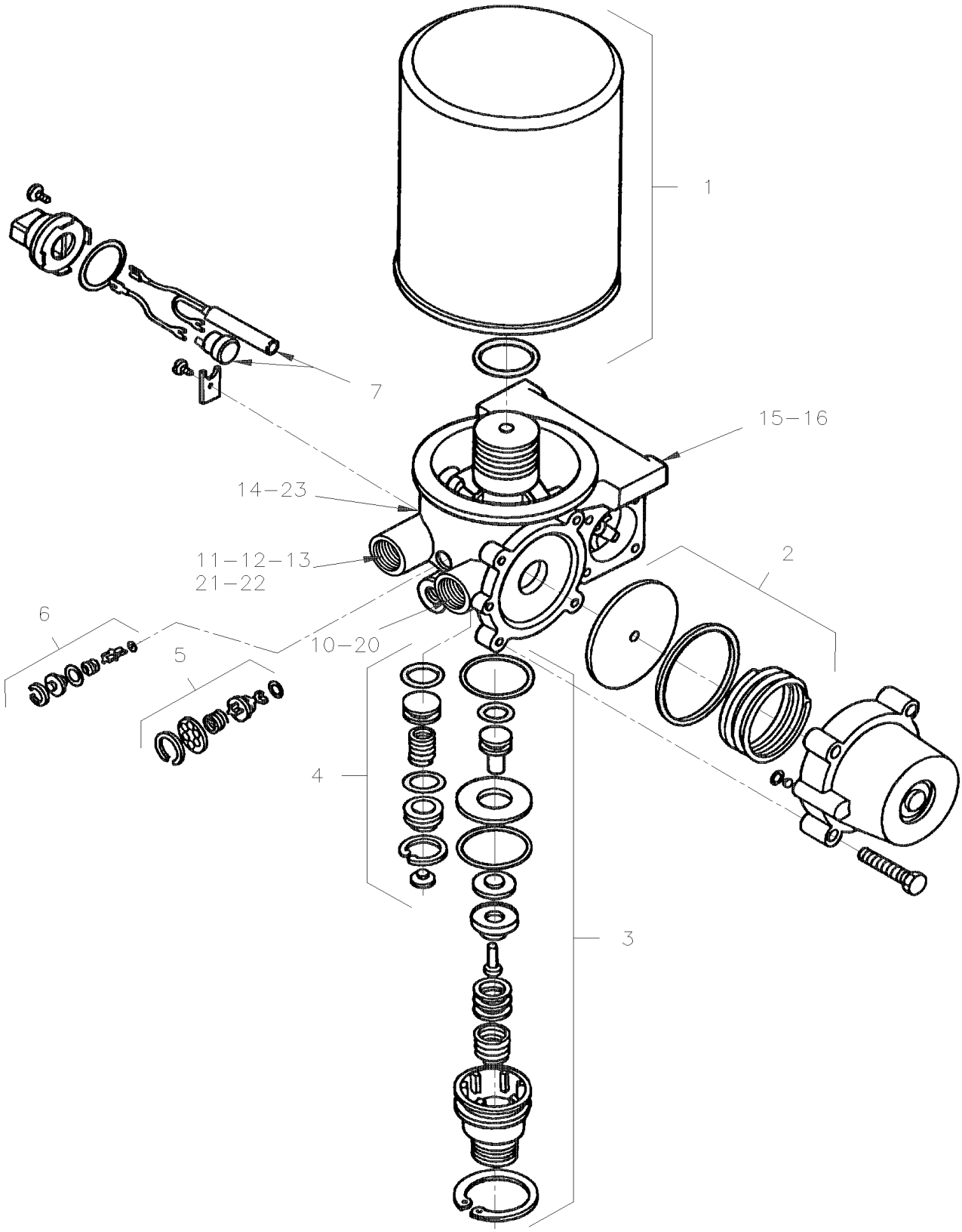

From Y-7046 To 2-7799		Date:07/2024	PAGE:Y2-1215-01

AIR DRYER - "ROCKWELL WABCO"

Item#	Part	Description	XLII 45	XLII MTH40	XLII MTH45	XLII MTH45E	NOTES
	641337	AIR DRYER "WABCO" / S-1200 / 24V HEATER		1	1	1	
1	641278	. DESICANT CARTRIDGE / "WABCO"		1	1	1	
. NS	MI04-12	. . SEE MAINTENANCE INFORMATION		1	1	1	
2	641284	. REGENERATION VALVE KIT		1	1	1	
3	641283	. PURGE VALVE KIT		1	1	1	
4	641282	. TURBO CUT-OFF VALVE KIT		1	1	1	
5	641281	. OUTLET CHECK VALVE KIT		1	1	1	
6	641280	. BY-PASS VALVE KIT		1	1	1	
7	641279	. HEATER ASSY KIT 24 VOLTS		1	1	1	
. NS	562251	. . CONNECTOR / METRI-PACK 280 / SH 2C / PED 12020599		1	1	1	
. NS	562101	. . SOCKET TERMINAL / 14-12 / PED 12129493		2	2	2	
10	641134	MALE ELBOW 90º / NTA FITTING / #12x1/2NPT-M BR		1	1	1	
11	507556	MALE BRANCHE TEE / PIPE FITTING / 1/2NPT-Fx1/2NPT-Fx1/2NPT-M BR		1	1	1	
12	501600	MALE CONNECTOR / JIC 37° FITTING / #12JIC-Mx1/2NPT-M STL		1	1	1	
NS	501316	BUSHING REDUCER / PIPE FITTING / 1/2NPT-Mx1/4NPT-F BR		1	1	1	
13	641371	MALE ELBOW 90° NON-SWIVEL / PUSH-IN FITTING / #4x1/4NPT-M BR		1	1	1	
14	501037	MALE ELBOW 90º / SAE 45º FITTING / #4FL-Mx1/4NPT-M BR		1	1	1	
15	500214	SCREW CAP HEX 1/2-13x1 1/4 G5 Z050		3	3	3	
NS	500482	WASHER LO SPT .506x.873x.125 Z050		3	3	3	
16	141877	SUPPORT AIR DRYER "WABCO"		1	1	1	
20	503465	TUBE, NYLON 3/4 O.D. / GREEN S.L.		AR	AR	AR	
21	503402	TUBE, NYLON 1/4 O.D. / BLACK S.L.		AR	AR	AR	
22	141889	HOSE ASSY TEFLON /DRYER&COMPRESSOR / #12 5698MM			1		
22	141891	HOSE ASSY TEFLON /DRYER&COMPRESSOR / #12 5013MM		1		1	
23	141890	HOSE ASSY TEFLON #4 5875MM			1		
23	141892	HOSE ASSY TEFLON #4 5190MM		1		1	
NS	141888	HOSE ASSY TEFLON #4 4431MM			1		A
NS	141887	HOSE ASSY TEFLON #4 3607MM		1		1	A
		A) BETWEEN GOVERNOR & WET TANK					

From 2-7800 To 3-7992		Date:07/2024	PAGE:Y2-1215-02
AIR DRYER - "HALDEX"			

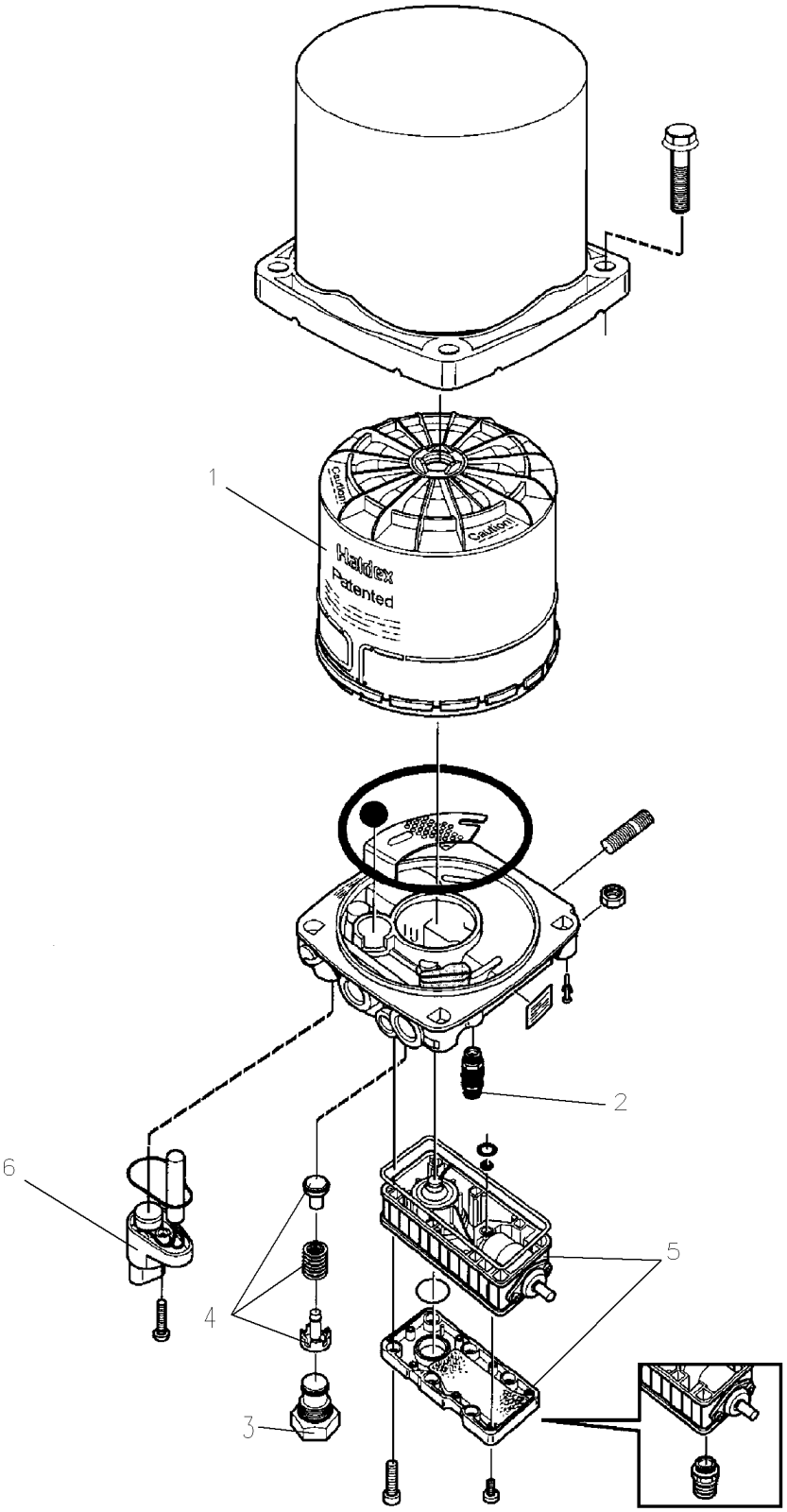

From 2-7800 To 3-7992		Date:07/2024	PAGE:Y2-1215-02

AIR DRYER - "HALDEX"

Item#	Part	Description	XLII 45	XLII MTH40	XLII MTH45	XLII MTH45E	NOTES
	70303498	AIR DRYER "HALDEX" / WITH GOVERNOR	1	1	1	1	A
	642001	AIR DRYER "HALDEX" / WITH GOVERNOR / 24V HEATER	1	1	1	1	
1	3097369	. DESICANT CARTRIDGE / "HALDEX"	1	1	1	1	
2	641953	. SAFETY VALVE	1	1	1	1	
3	N8885277	. REGENERATION VALVE BLACK PLASTIC M22-1.5	1	1	1	1	
4	N8894693	. . KIT CHECK VALVE	1	1	1	1	
5	641954	. VALVE PACK / W/INTEGRATED GOVERNOR 8.5BAR	1	1	1	1	
6	N8882161	HEATER ELEMENT 24VOLT / W/ PIG TAIL CONNECTOR	1	1	1	1	C
. NS	562251	. CONNECTOR / METRI-PACK 280 / SH 2C / PED 12020599	1	1	1	1	C
NS	141949	KIT, RETROFIT "HALDEX" / "XL-II" SERIES	1		1		
. NS	WB04-01	. SEE WARRANTY BULLETIN	1		1		
NS	141950	KIT, RETROFIT "HALDEX" / "XL-II" SERIES		1		1	
. NS	WB04-01	. SEE WARRANTY BULLETIN		1		1	
NS	141951	. HOSE ASSY TEFLON #4 5100MM		1		1	B
NS	141952	. HOSE ASSY TEFLON #4 5500MM	1		1		B
		A) FOR PRODUCT IMPROVEMENT SEE KIT 141949 & 141950					
		B) USE ONLY WITH KIT 141949 OR 141950					
		C) USE ONLY WITH 642001					

From 3-7993 To 3-8164		Date:07/2024	PAGE:Y2-1215-03
AIR DRYER - "ROCKWELL WABCO"			

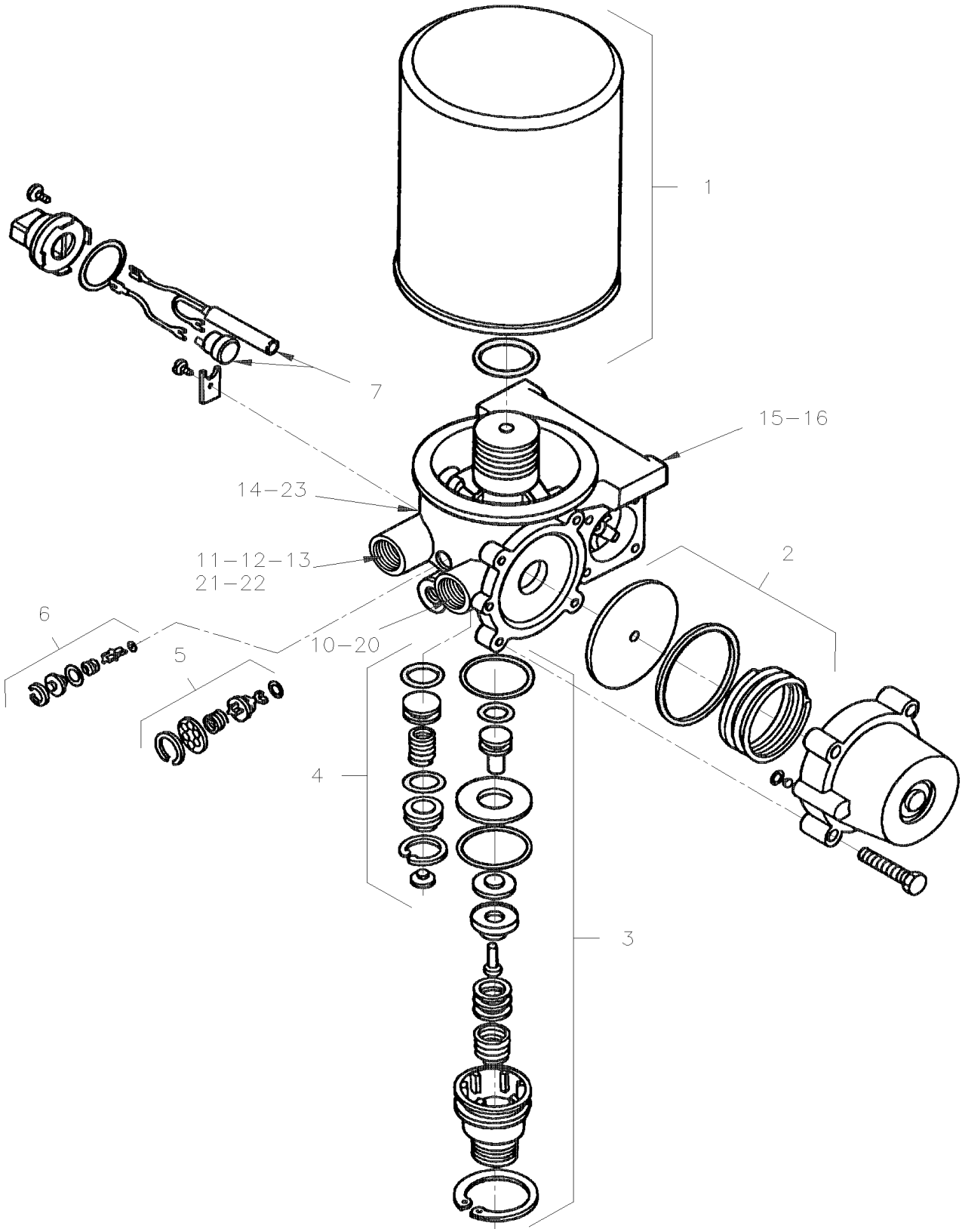

From 3-7993 To 3-8164		Date:07/2024	PAGE:Y2-1215-03

AIR DRYER - "ROCKWELL WABCO"

Item#	Part	Description	XLII 45	XLII MTH40	XLII MTH45	XLII MTH45E	NOTES
	641337	AIR DRYER "WABCO" / S-1200 / 24V HEATER	1	1	1	1	
1	641278	. DESICANT CARTRIDGE / "WABCO"	1	1	1	1	
. NS	MI04-12	. . SEE MAINTENANCE INFORMATION	1	1	1	1	
2	641284	. REGENERATION VALVE KIT	1	1	1	1	
3	641283	. PURGE VALVE KIT	1	1	1	1	
4	641282	. TURBO CUT-OFF VALVE KIT	1	1	1	1	
5	641281	. OUTLET CHECK VALVE KIT	1	1	1	1	
6	641280	. BY-PASS VALVE KIT	1	1	1	1	
7	641279	. HEATER ASSY KIT 24 VOLTS	1	1	1	1	
. NS	562251	. . CONNECTOR / METRI-PACK 280 / SH 2C / PED 12020599	1	1	1	1	
. NS	562101	. . SOCKET TERMINAL / 14-12 / PED 12129493	2	2	2	2	
NS	641319	SNUBBLER AIR DISCHARGE / BLACK PLASTIC	1	1	1	1	
10	641134	MALE ELBOW 90º / NTA FITTING / #12x1/2NPT-M BR	1	1	1	1	
NS	501473	MALE RUN TEE / PIPE FITTING / 1/2NPT-Mx1/2NPT-Fx1/2NPT-F BR	1	1	1	1	
11	507556	MALE BRANCHE TEE / PIPE FITTING / 1/2NPT-Fx1/2NPT-Fx1/2NPT-M BR		1	1	1	
12	501600	MALE CONNECTOR / JIC 37° FITTING / #12JIC-Mx1/2NPT-M STL	1	1	1	1	
NS	501316	BUSHING REDUCER / PIPE FITTING / 1/2NPT-Mx1/4NPT-F BR		1	1	1	
13	641371	MALE ELBOW 90° NON-SWIVEL / PUSH-IN FITTING / #4x1/4NPT-M BR		1	1	1	
14	501037	MALE ELBOW 90º / SAE 45º FITTING / #4FL-Mx1/4NPT-M BR		1	1	1	
15	500214	SCREW CAP HEX 1/2-13x1 1/4 G5 Z050	3	3	3	3	
NS	500482	WASHER LO SPT .506x.873x.125 Z050	3	3	3	3	
16	141877	SUPPORT AIR DRYER "WABCO"		1	1	1	
NS	500086	SCREW CAP HEX 1/2-20x1 1/4 G5 Z050	2	2	2	2	
NS	500718	NUT HEX STO 1/2-20 Z050	2	2	2	2	
20	503465	TUBE, NYLON 3/4 O.D. / GREEN S.L.		AR	AR	AR	
21	503404	TUBE, NYLON 3/8 O.D. / BLACK S.L.		AR	AR	AR	
22	141889	HOSE ASSY TEFLON /DRYER&COMPRESSOR / #12 5698MM			1		
22	141891	HOSE ASSY TEFLON /DRYER&COMPRESSOR / #12 5013MM		1		1	
NS	142277	HOSE ASSY TEFLON #12 970MM	1				O
NS	142278	HOSE ASSY / DRYER TUBE & AIR DRYER / #12 1050MM	1				O
NS	142279P	AIR DRYER TUBE ASSY	1				O
23	141890	HOSE ASSY TEFLON #4 5875MM	1		1		
23	141892	HOSE ASSY TEFLON #4 5190MM		1		1	
NS	141888	HOSE ASSY TEFLON #4 4431MM	1		1		
NS	141887	HOSE ASSY TEFLON #4 3607MM		1		1	
		O) OPTION					

From 4-8165 To 8-9339		Date:07/2024	PAGE:Y2-1215-04
AIR DRYER - "HALDEX"			

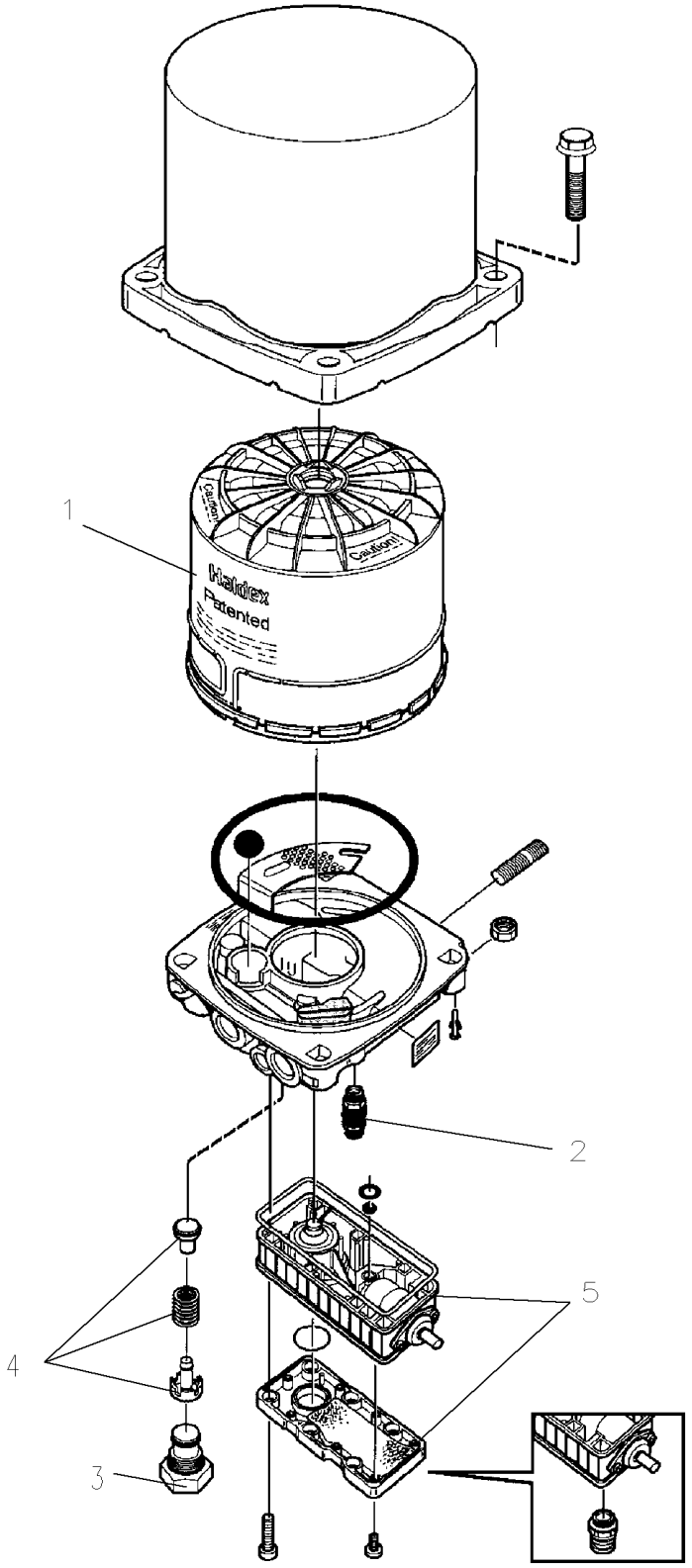

From 4-8165 To 8-9339		Date:07/2024	PAGE:Y2-1215-04

AIR DRYER - "HALDEX"

Item#	Part	Description	XLII 45	XLII MTH40	XLII MTH45	XLII MTH45E	NOTES
	70303498	AIR DRYER "HALDEX" / WITH GOVERNOR To 5-8435	1	1	1	1	
	642016	AIR DRYER "HALDEX" / WITH GOVERNOR 8.5 Bar From 5-8436 To 7-9032	1	1	1	1	
	642070	AIR DRYER "HALDEX" / WITH GOVERNOR 9.0 Bar From 7-9033			1	1	
1	3097369	. DESICANT CARTRIDGE / "HALDEX"	1	1	1	1	
2	641953	SAFETY VALVE	1	1	1	1	
3	N8885277	. REGENERATION VALVE BLACK PLASTIC M22-1.5	1	1	1	1	
4	N8894693	. . KIT CHECK VALVE	1	1	1	1	
5	641954	. VALVE PACK / W/INTEGRATED GOVERNOR 8.5BAR To 5-8435	1	1	1	1	
5	642017	. VALVE PACK / W/INTEGRATED GOVERNOR 8.5BAR From 5-8436	1	1	1	1	
5	642071	. VALVE PACK / W/INTEGRATED GOVERNOR 9.0BAR	1	1	1	1	

From 2-7800 To 8-9339		Date:07/2024	PAGE:Y2-1215-10
AIR DRYER - "HALDEX" - INSTALLATION			

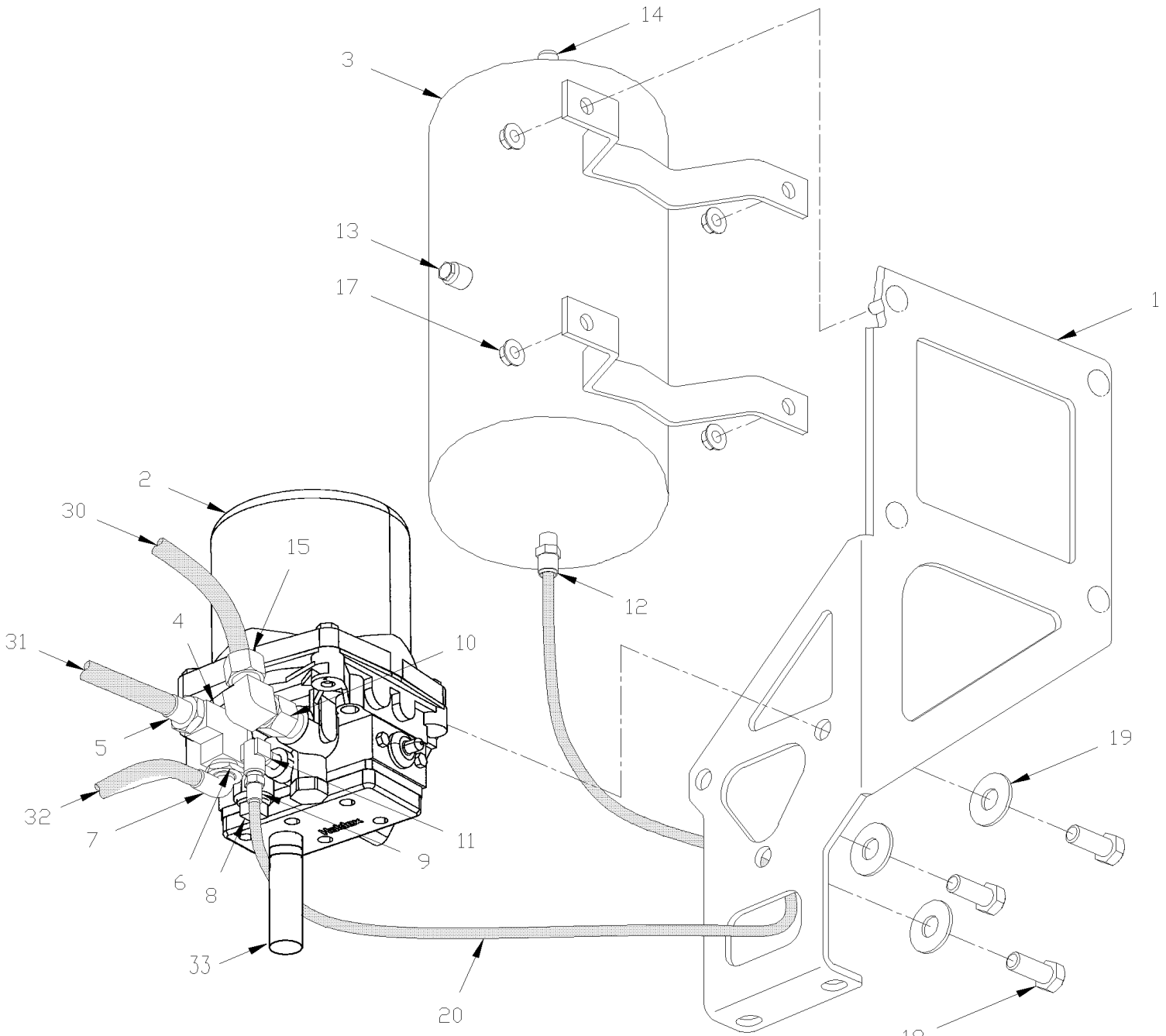

From 2-7800 To 8-9339		Date:07/2024	PAGE:Y2-1215-10

AIR DRYER - "HALDEX" - INSTALLATION

Item#	Part	Description	XLII 45	XLII MTH40	XLII MTH45	XLII MTH45E	NOTES
1	142188	SUPPORT, AIR DRYER	1	1	1	1	
2	**Y2-1215-02**	**AIR DRYER - "HALDEX"**					
2	**Y2-1215-04**	**AIR DRYER - "HALDEX"**					
3	70307176	AIR TANK / 281 IN° / 6" O.D. X 12"	1	1	1	1	
4	501473	MALE RUN TEE / PIPE FITTING / 1/2NPT-Mx1/2NPT-Fx1/2NPT-F BR	1	1	1	1	
5	501600	MALE CONNECTOR / JIC 37° FITTING / #12JIC-Mx1/2NPT-M STL	1	1	1	1	
6	501316	BUSHING REDUCER / PIPE FITTING / 1/2NPT-Mx1/4NPT-F BR	1	1	1	1	
7	641371	MALE ELBOW 90° NON-SWIVEL / PUSH-IN FITTING / #4x1/4NPT-M BR	1	1	1	1	
8	501517	PLUG SQUARE HEAD / PIPE FITTING / 3/4NPT-M BR	1	1	1	1	
9	641366	MALE ELBOW 45° NON-SWIVEL / PUSH-IN FITTING / #6x1/4NPT-M BR	1	1	1	1	
10	5011119	ADAPTER / PIPE FITTING / 1/2NPT-Fx1/2NPT-M BR	1	1	1	1	
11	501332	STREET ELBOW 90º / PIPE FITTING / 1/4NPT-Mx1/4NPT-F BR	1	1	1	1	
12	641331	MALE CONNECTOR / PUSH-IN FITTING / #6x1/4NPT-M BR	1	1	1	1	
13	501800	PLUG HEXS / PIPE FITTING / 1/4NPT-M STL	2	2	2	2	
14	501449	PLUG HEXS / PIPE FITTING / 3/8NPT-M STL	1	1	1	1	
15	641134	MALE ELBOW 90º / NTA FITTING / #12x1/2NPT-M BR	1	1	1	1	
17	5001083	NUT HEXF NYRT 5/16-18 Z050	2	2	2	2	
18	500850	SCREW CAP HEX M12-1.75X25 G8.8 Z050	3	3	3	3	
19	500482	WASHER LO SPT .506x.873x.125 Z050	3	3	3	3	
20	503472	TUBE, NYLON 3/8 O.D. / GREY S.L.	AR	AR	AR	AR	
30	503465	TUBE, NYLON 3/4 O.D. / GREEN S.L.	AR	AR	AR	AR	
31	142271	HOSE ASSY / W/COIL / #12 3275MM To 3-8164	1				
31	142271	HOSE ASSY / W/COIL / #12 3275MM To 7-9095			1		
31	144868	HOSE ASSY / W/COIL / #12 3275MM From 7-9096			1		
NS	142221	HOSE ASSY TEFLON #12 1805MM	1		1		A
NS	142222	HOSE ASSY TEFLON #12 1175MM		1		1	A
32	503402	TUBE, NYLON 1/4 O.D. / BLACK S.L.	AR	AR	AR	AR	
33	503523	HOSE SILICONE 1PLY 3/4" I.D. x 100' / S.L. From 5-8415	AR	AR	AR	AR	B
NS	504018	HOSE CLAMP / 7/16"-1" SS / HS-8 From 5-8415	1	1	1	1	B
		A) FROM "PING TANK" TO COMPRESSOR					
		B) FIXED AT "EXHAUST"					

From 2-7800 To 3-8164		Date:07/2024	PAGE:Y2-1215-11
AIR DRYER TUBE - INSTALLATION			

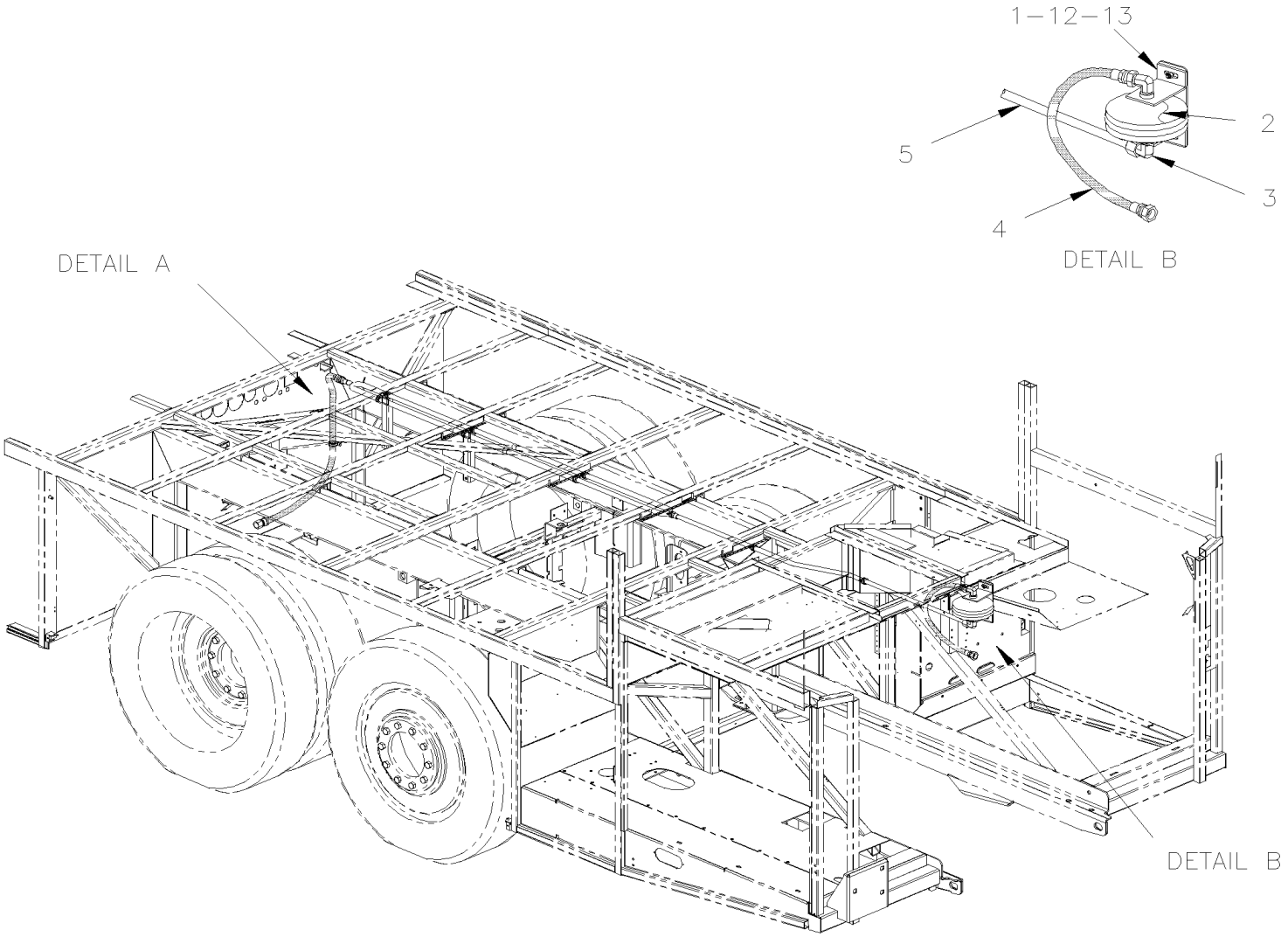

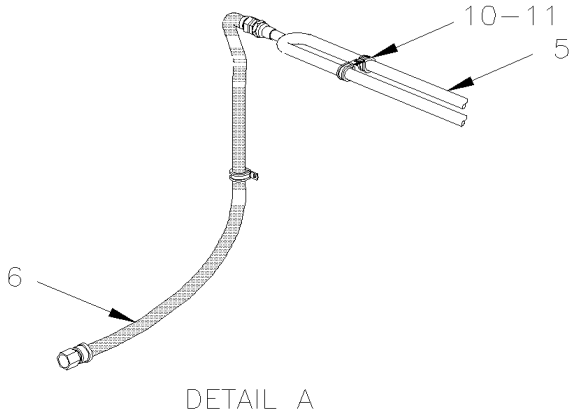

From 2-7800 To 3-8164		Date:07/2024	PAGE:Y2-1215-11

AIR DRYER TUBE - INSTALLATION

Item#	Part	Description	XLII 45	XLII MTH40	XLII MTH45	XLII MTH45E	NOTES
1	142280	SUPPORT PING AIR TANK To 3-8164	1				O
1	142280	SUPPORT PING AIR TANK		1	1	1	
2	032428	AIR TANK / 61 IN° / 6" O.D. X 4" To 3-8164	1				O
2	032428	AIR TANK / 61 IN° / 6" O.D. X 4"		1	1	1	
3	5011233	MALE ELBOW 90° / JIC 37° FITTING / #12JIC-Mx1/2NPT-M SS To 3-8164	2				O
3	5011233	MALE ELBOW 90° / JIC 37° FITTING / #12JIC-Mx1/2NPT-M SS		1	1	1	
4	142277	HOSE ASSY TEFLON #12 970MM	1				O
4	142221	HOSE ASSY TEFLON #12 1805MM From 2-7800 To 3-7992	1		1		
4	142222	HOSE ASSY TEFLON #12 1175MM From 2-7800 To 3-7992		1		1	
4	142221	HOSE ASSY TEFLON #12 1805MM From 4-8165			1		
4	142222	HOSE ASSY TEFLON #12 1175MM From 4-8165		1		1	
5	142279P	AIR DRYER TUBE ASSY To 3-8164	1				O
5	142271	HOSE ASSY / W/COIL / #12 3275MM From 2-7800 To 3-7992		1	1	1	
6	142278	HOSE ASSY / DRYER TUBE & AIR DRYER / #12 1050MM To 3-8164	1				O
6	142300	HOSE ASSY / #12 1390MM	1				
10	952631	CLAMP / 3/4" I.D.	AR				
10	952633	CLAMP / 7/8" I.D.	AR				
11	500613	SCREW TP PAN PH #10x1/2 Z050	AR				
NS	500964	WASHER FL .203x.500x.047 Z050	AR				
12	5001083	NUT HEXF NYRT 5/16-18 Z050	2				
13	5011215	WASHER FL .328x.875x.062 Z050	2				
		O) OPTION SPECIAL ON BUS					

From 4-8165 To 6-8906		Date:07/2024	PAGE:Y2-1215-12
AIR DRYER - INSTALLATION			

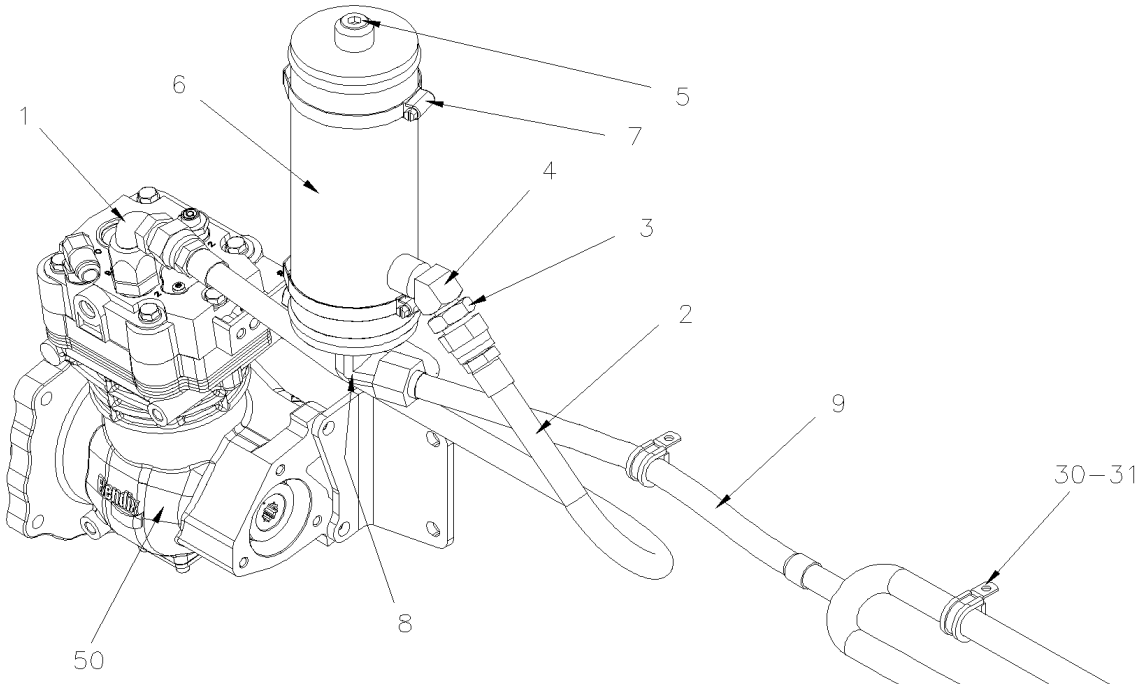

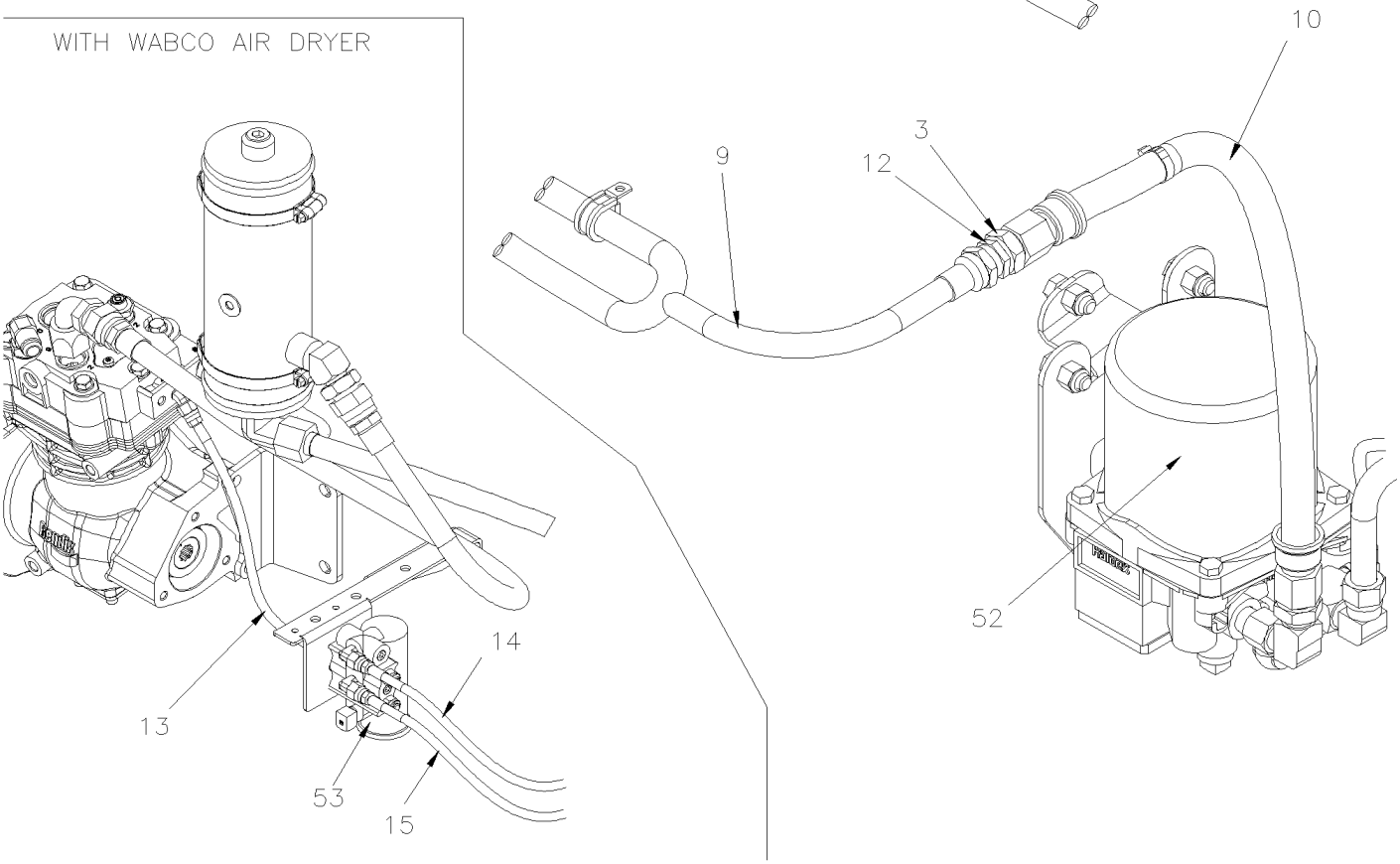

From 4-8165 To 6-8906		Date:07/2024	PAGE:Y2-1215-12

AIR DRYER - INSTALLATION

Item#	Part	Description	XLII 45	XLII MTH40	XLII MTH45	XLII MTH45E	NOTES
1	5011257	MALE CONNECTOR / JIC 37° FITTING / #12JIC-MxM22-1.5-M STL	1				
. NS	N.P.N.	. O-RING	1				4
. NS	507341	. WASHER RET M22x1.5	1				
2	142277	HOSE ASSY TEFLON #12 970MM	1				
3	501600	MALE CONNECTOR / JIC 37° FITTING / #12JIC-Mx1/2NPT-M STL	2				
4	501528	STREET ELBOW 45º / PIPE FITTING / 1/2NPT-Mx1/2NPT-F BR	1				
5	501966	PLUG HEXS / PIPE FITTING / 1/2NPT-M STL	1				
6	641982	AIR TANK / 96 IN° / 3 1/2" O.D. X 10"	1				
7	504235	HOSE CLAMP / 3"9/16"-4"1/2 SS / HS-64	2				
9	142342P	AIR DRYER TUBE ASSY	1				
10	142278	HOSE ASSY / DRYER TUBE & AIR DRYER / #12 1050MM	1				
13	148039	HOSE ASSY TEFLON #4 290MM					
14	141890	HOSE ASSY TEFLON #4 5875MM	1				
15	141888	HOSE ASSY TEFLON #4 4431MM	1				
30	952631	CLAMP / 3/4" I.D.	3				
30	952633	CLAMP / 7/8" I.D.	6				
31	500613	SCREW TP PAN PH #10x1/2 Z050	AR				
50	**Y2-1205-11**	**AIR COMPRESSOR - "BA921" - WITH DETROIT S-60**					
52	**Y2-1215-04**	**AIR DRYER - "HALDEX"**					
52	**Y2-1215-10**	**AIR DRYER - "HALDEX" - INSTALLATION**					
		4) NO PARTS NUMBER					

From 4-8165 To 6-8906		Date:07/2024	PAGE:Y2-1215-15
CHECK VALVE INSTALLATION WITH "WABCO" & AD-9			

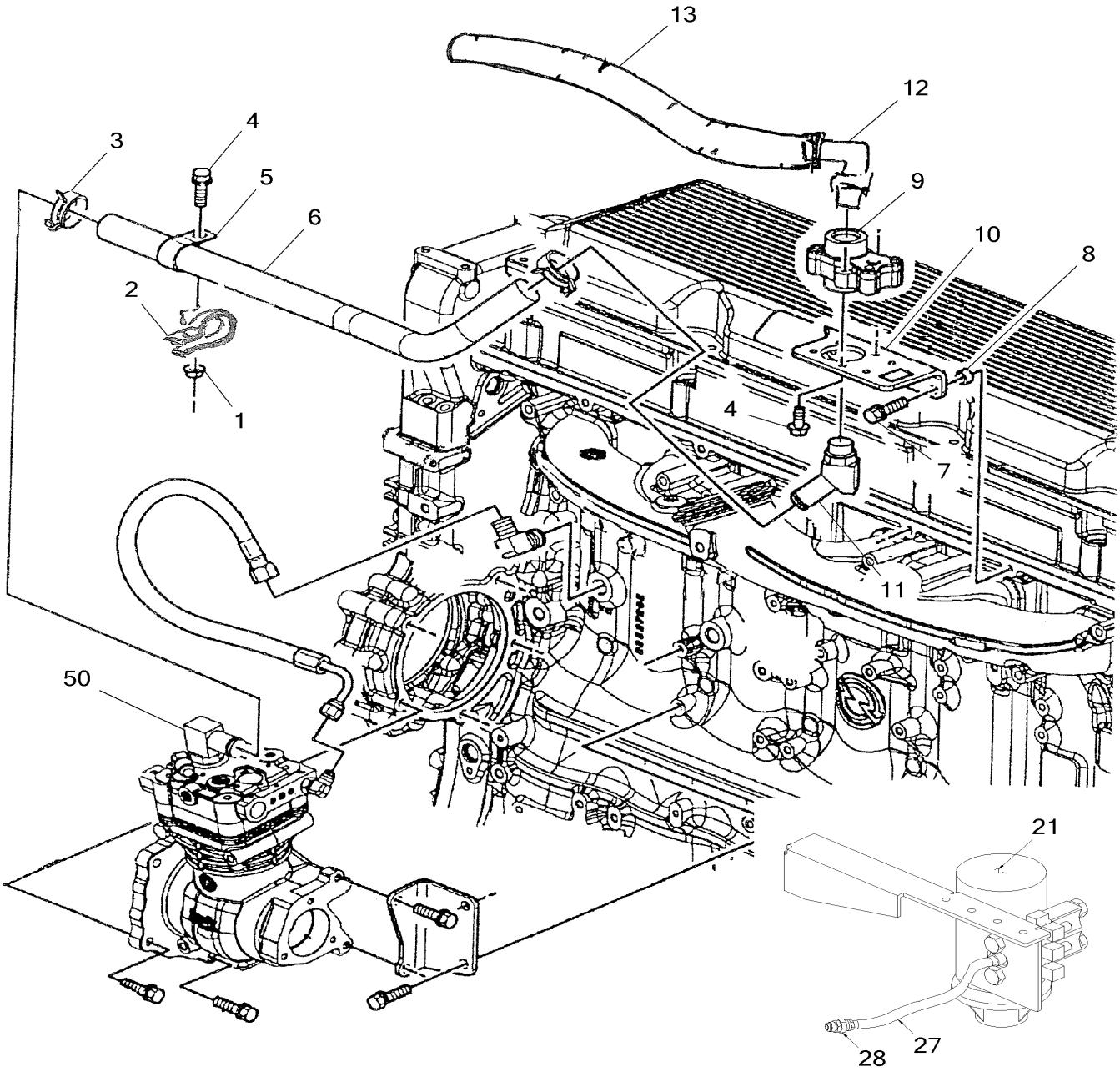

From 4-8165 To 6-8906		Date:07/2024	PAGE:Y2-1215-15
CHECK VALVE INSTALLATION WITH "WABCO" & AD-9			

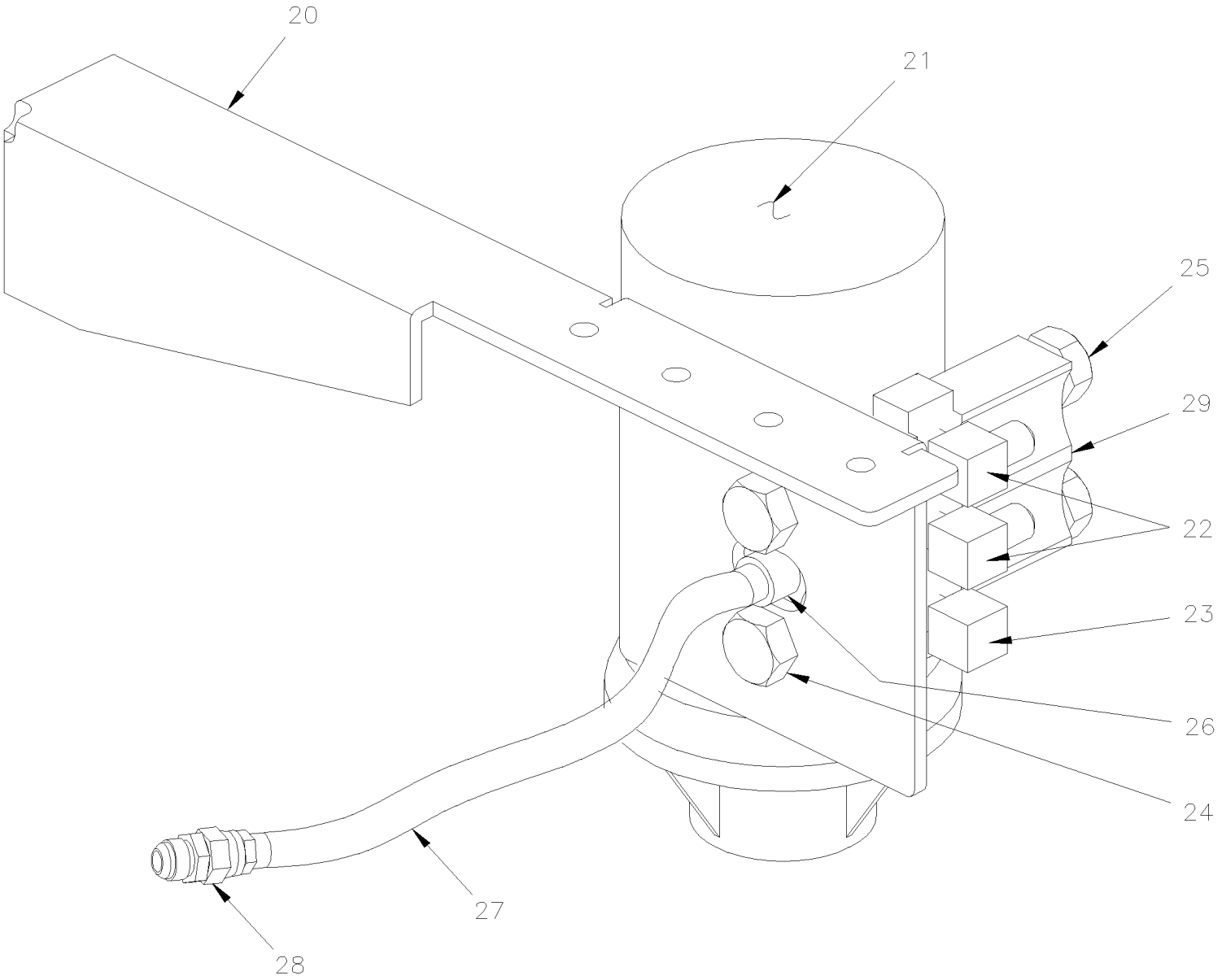

From 4-8165 To 6-8906		Date:07/2024	PAGE:Y2-1215-15

CHECK VALVE INSTALLATION WITH "WABCO" & AD-9

Item#	Part	Description	XLII 45	XLII MTH40	XLII MTH45	XLII MTH45E	NOTES
1	507636	NUT HEXF M8-1.25	1				
2	952625	CLAMP / 3/8" I.D.	1				
3	504319	HOSE CLAMP / 1"-1"1/2 SS / E.T. 16	1				
4	507637	SCREW CAP HEXF M8-1.25x20 G10.9 PHC	3				
5	507638	CLAMP 1"1/4 I.D. X .531	1				
6	510870	HOSE 1" I.D. X 29.38"	1				
7	507639	SCREW CAP HEXF M8-1.25x30 G10.9 PHC	2				
8	507640	SPACER 13/32" I.D. X 7/8" O.D. X 1/4"	2				
9	510866	INTAKE CHECK VALVE	1				
10	510867	SUPPORT CHECK VALVE	1				
11	510868	HOSE ADAPTOR 45 DEG M27 X 1"	1				
12	510869	HOSE ADAPTOR 90 DEG M27 X 1"	1				
13	142290	HOSE / (SUCTION AIR COMPRESSOR) / #16 870MM	1				
20	066059	SUPPORT / AIR GOUVERNOR D-2	1				A
21	641933	GOVERNOR, AIR / D-2 / (110/130PSI)	1				A
. NS	640965	. REPAIR KIT / GOVERNOR D-2	1				A
. NS	640638	. GASKET, AIR GOVERNOR	1				A
. NS	500187	. SCREW CAP HEX 5/16-18x3 G5 Z050	2				A
. NS	500942	. WASHER LO SPT 8.1x14.8x2.0 N500	2				A
22	501036	MALE ELBOW 90º / SAE 45º FITTING / #4FL-Mx1/8NPT-M BR	2				A
23	501331	STREET ELBOW 90º / PIPE FITTING / 1/8NPT-Mx1/8NPT-F BR	1				A
24	502258	SCREW CAP HEX M8-1.25x75 G8.8 FT Z050	2				A
25	966171	NUT HEX NYRT M8x1.25 SS	2				A
26	501026	MALE CONNECTOR / SAE 45º FITTING / #4FL-Mx1/8NPT-M BR	1				A
27	148039	HOSE ASSY TEFLON #4 290MM	1				A
28	501808	MALE ELBOW 45º / SAE 45º FITTING / #4FL-Mx1/8NPT-M BR	1				A
29	501072	PLUG HEXS / PIPE FITTING / 1/8NPT-M STL	2				A
50	**Y2-1205-11**	**AIR COMPRESSOR - "BA921" - WITH DETROIT S-60**					
		A) FIXED UNDER ENGINE AIR INLET MANIFOLD					

From Y-7046 To 8-9339		Date:07/2024	PAGE:Y2-1220-00
MISCELLANEOUS AIR VALVE			

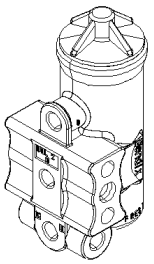
5

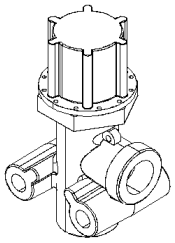
10

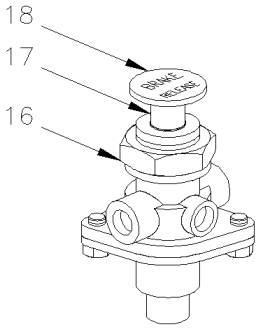

15

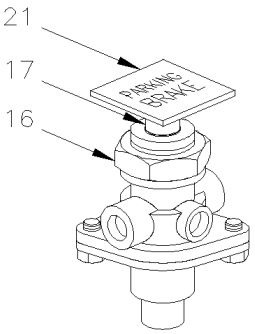

20

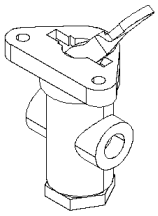
25

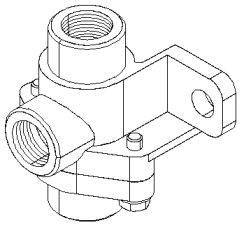
30

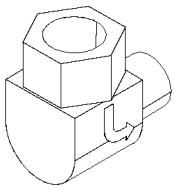
35

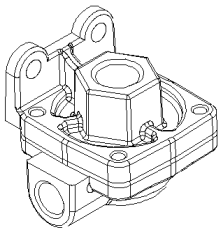
40

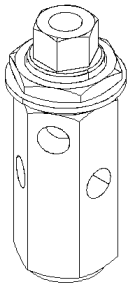
45

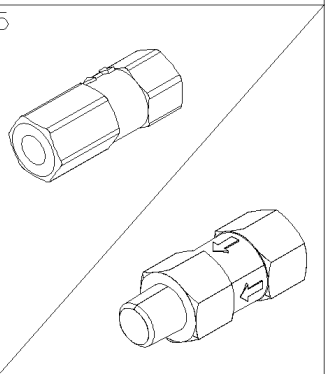

50

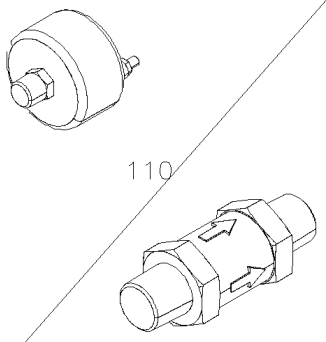

60

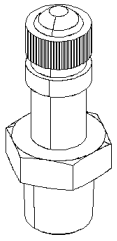
70

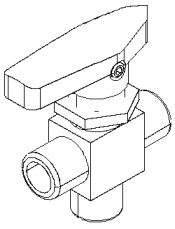
75

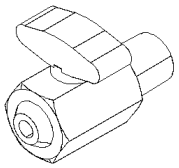
90

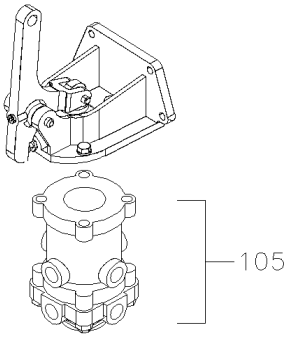

100

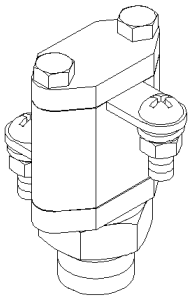
85

From Y-7046 To 8-9339		Date:07/2024	PAGE:Y2-1220-00

MISCELLANEOUS AIR VALVE

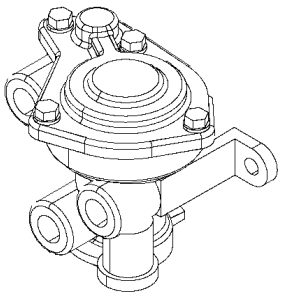

140

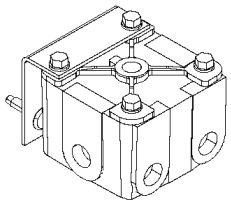

125

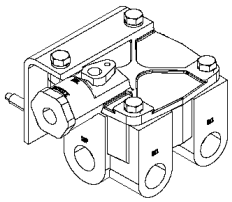

130

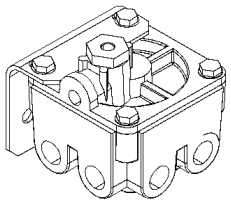

135

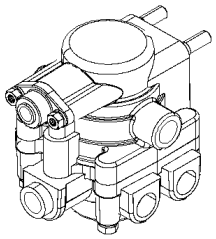

145

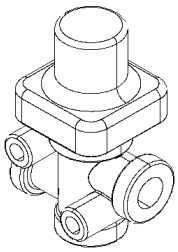

150

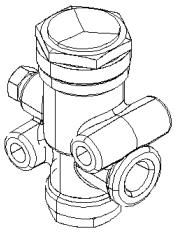

155

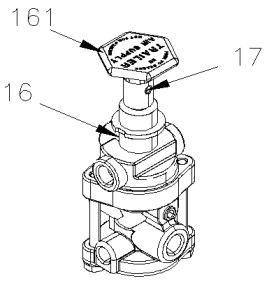

160

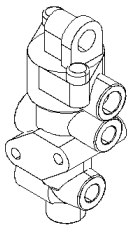

170

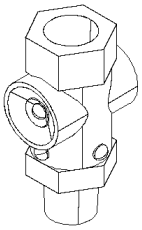

175

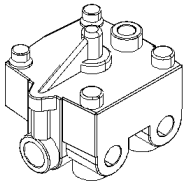

180

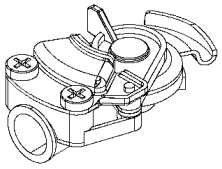

185

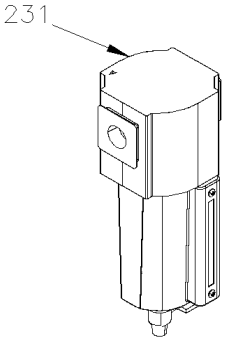

230

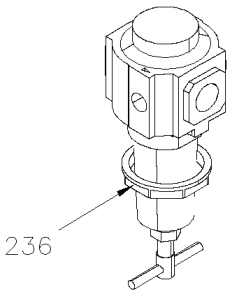

235

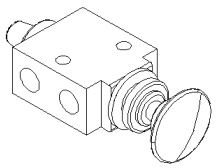

240

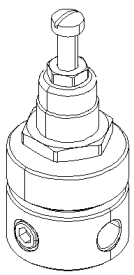

245

From Y-7046 To 8-9339		Date:07/2024	PAGE:Y2-1220-00
MISCELLANEOUS AIR VALVE			

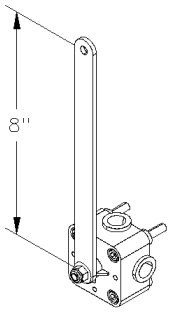

350

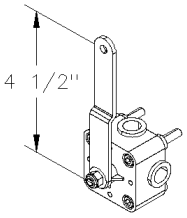

355

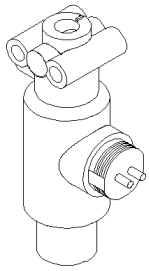

305

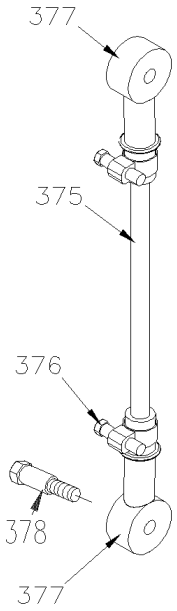

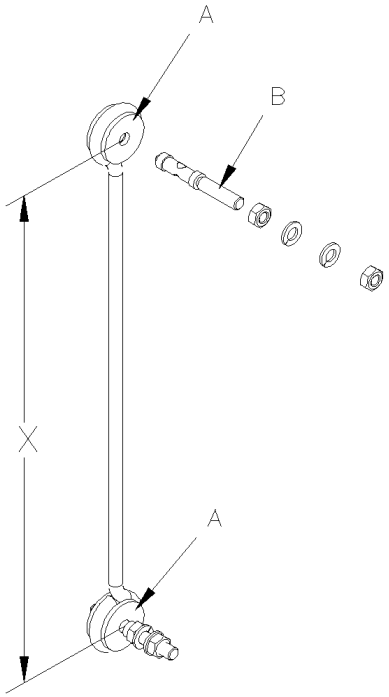

385

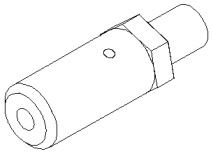

250

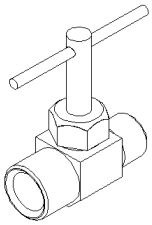

260

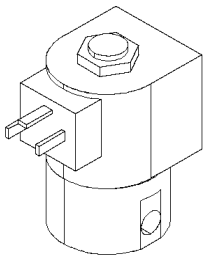

275

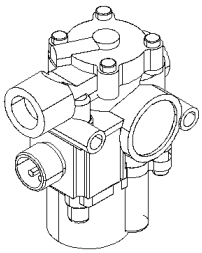

300

From Y-7046 To 8-9339		Date:07/2024	PAGE:Y2-1220-00
MISCELLANEOUS AIR VALVE			

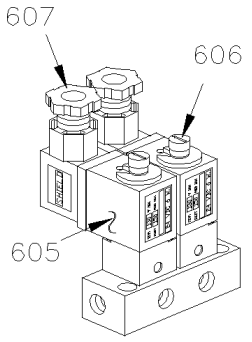

600

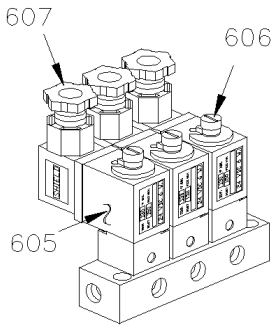

601

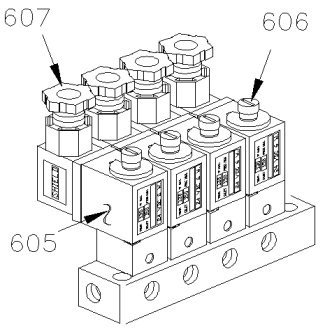

602

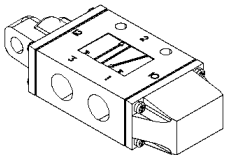
610

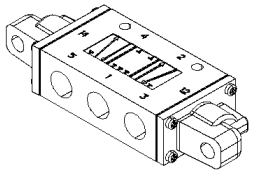
615

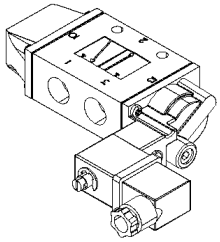
620

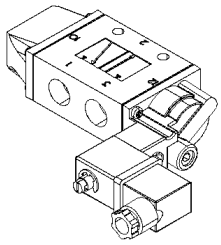
625

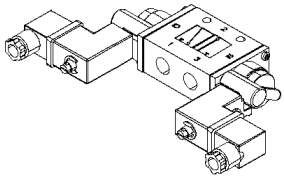
630

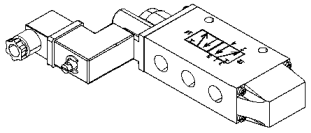
635

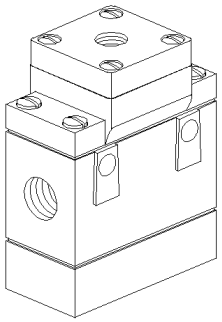
640

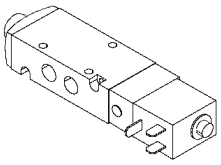
650

From Y-7046 To 8-9339		Date:07/2024	PAGE:Y2-1220-00

MISCELLANEOUS AIR VALVE

Item#	Part	Description	XLII 45	XLII MTH40	XLII MTH45	XLII MTH45E	NOTES
5	641933	GOVERNOR, AIR / D-2 / (110/130PSI)	1	1	1	1	
. NS	640965	. REPAIR KIT / GOVERNOR D-2	1	1	1	1	
. NS	640638	. GASKET, AIR GOVERNOR	1	1	1	1	
. NS	500187	. SCREW CAP HEX 5/16-18x3 G5 Z050	2	2	2	2	
. NS	500942	. WASHER LO SPT 8.1x14.8x2.0 N500	2	2	2	2	
10	640439	VALVE, PRESSURE PROTECTION / PR-2 75PSI	1	1	1	1	
15	640472	VALVE, CONTROL / RD-3	1	1	1	1	
. NS	641154	. REPAIR KIT / PP-1 & RD-3	1	1	1	1	
16	640297	NUT	1	1	1	1	
17	640286	PIN ROLLER	1	1	1	1	
18	641155	BUTTON, OVERRULE ROUND BLACK	1	1	1	1	
NS	640394	BUTTON, PARKING BRAKE ROUND BLACK / 1"	1	1	1	1	
20	641128	VALVE, CONTROL VALVE PP-1 / 40PSI	1	1	1	1	
. NS	641154	. REPAIR KIT / PP-1 & RD-3	1	1	1	1	
21	641149	BUTTON, PARKING BRAKE DIAMOND YELLOW / 1"	1	1	1	1	
25	640136	VALVE, CONTROL TW-1	1	1	1	1	
. NS	641156	. REPAIR KIT / TW-1	1	1	1	1	
30	641015	VALVE, DOUBLE CHECK DC-4	1	1	1	1	
30	641564	VALVE, DOUBLE CHECK DC-4	1	1	1	1	
35	641172	VALVE, CHECK ELBOW 90º 1/2 NPT	1	1	1	1	
40	641429	VALVE, QUICK RELEASE QR-1 / 3/8NPTx3/8NPTx3/8NPT	1	1	1	1	
. NS	640924	. REPAIR KIT / QR-1	1	1	1	1	
45	640442	VALVE, INVERSION TR-2	1	1	1	1	
50	640135	VALVE, CHECK 1/4 NPT	1	1	1	1	
55	640123	VALVE, CHECK 1/2 NPT SC-1	1	1	1	1	
. NS	641401	. VALVE, CHECK 1/2 NPT SC-1	1	1	1	1	
55	641401	VALVE, CHECK 1/2 NPT SC-1	1	1	1	1	
60	530175	VALVE, CHECK 1/8 NPT	1	1	1	1	
70	640488	VALVE, AIR FILL 1/8" NPT	1	1	1	1	
. NS	650164	. CAP VALVE / CHROME	1	1	1	1	
75	641417	VALVE, 3 WAYS 1/8NPT-Fx1/8NPT-Fx1/8NPT-F BR	1	1	1	1	
. NS	642014	. HANDLE / RED	1	1	1	1	
75	642161	VALVE, 3 WAYS 1/8NPT-Fx1/8NPT-Fx1/8NPT-F BR / SERVICE	1	1	1	1	
. NS	642014	. HANDLE / RED	1	1	1	1	
85	640975	PRESSURE SWITCH N.C. 66PSI / ¼NPT LP-3	1	1	1	1	
85	641174	PRESSURE SWITCH N.C. 30PSI / ¼NPT LP-2	1	1	1	1	
90	641043	DRAIN VALVE 1/4 NPT M	1	1	1	1	
100	641856	BRAKE VALVE ASSY W/BRACKET / MODEL E-10P	1	1	1	1	
. NS	19507993	. BOOT PLUNGER	1	1	1	1	
. NS	19510779	. PLUNGER	1	1	1	1	
. NS	2222120	. MOUNTING BRACKET COUPLING D-1	1	1	1	1	
105	641925	. VALVE SUB ASSY / MODEL E-10P	1	1	1	1	

From Y-7046 To 8-9339		Date:07/2024	PAGE:Y2-1220-00

MISCELLANEOUS AIR VALVE

Item#	Part	Description	XLII 45	XLII MTH40	XLII MTH45	XLII MTH45E	NOTES
110	641462	PRESSURE SWITCH N.O. 4PSI / ¼NPT W/10-32 / SL-5 BRAKE	1	1	1	1	
125	641088	VALVE, RELAY R-12 HORIZONTAL PORT	1	1	1	1	
125	642068	VALVE, RELAY R-12 HORIZONTAL PORT / W/OUT SUPPORT	1	1	1	1	
130	641120	VALVE, RELAY R-14 HORIZONTAL PORT 4psi Crack	1	1	1	1	
. NS	10508267	. KIT, REPAIR	1	1	1	1	
135	641991	VALVE, RELAY R-14 "WABCO"	1	1	1	1	
140	640870	VALVE / SPRING BRAKE SR-1	1	1	1	1	
. NS	640921	. REPAIR KIT / SR-1	1	1	1	1	
145	642015	VALVE / SPRING BRAKE SR-7	1	1	1	1	
145	643384	VALVE / SPRING BRAKE SR-7	1	1	1	1	
. NS	642119	. VALVE / SPRING BRAKE SR-7	1	1	1	1	
150	641137	VALVE, PRESSURE PROTECTION TYPE PR-4 70PSI	1	1	1	1	
155	640471	VALVE, INVERSION TR-3 25-40LBS	1	1	1	1	
160	641397	TRAILER SUPPLY VALVE PP-7	1	1	1	1	
161	641935	BUTTON RED / FOR TRAILER VALVE PP-7	1	1	1	1	
170	641495	TRACTOR PROTECTION VALVE TP-3 DC	1	1	1	1	
175	642088	VALVE, QUICK RELEASE QR-L / IN LINE	1	1	1	1	
180	641399	VALVE, RELAY R-12 P SUPPERSEEDED 642097	1	1	1	1	
185	641939	GLANDHAND W/DUST COVER "BLUE"	1	1	1	1	
185	641938	GLANDHAND W/DUST COVER "RED"	1	1	1	1	
230	641338	AIR FILTER ASSY	1	1	1	1	
231	641339	SUPPORT / AIR FILTER	1	1	1	1	
235	641352	AIR PRESSURE REGULATOR 1/2" NPT	1	1	1	1	
236	641506	NUT RING / AIR REGULATOR RETAINING	1	1	1	1	
NS	142025	SUPPORT / AIR REGULATOR	1	1	1	1	A
240	641445	VALVE, 3 WAYS, 2 POSITIONS MECHANICAL	1	1	1	1	
. NS	641992	. KNOB	1	1	1	1	
245	641472	AIR PRESSURE REGULATOR 1/4" NPT / COPPER	1	1	1	1	
250	642022	SAFETY VALVE 150 PSI X 3/8 NPT / ST-3	1	1	1	1	
260	501354	NEEDLE VALVE 1/8 NPT M x 1/8 NPT F	1	1	1	1	
275	562804	VALVE, 2 WAYS N.C.	1	1	1	1	
. NS	562848	. CONNECTOR / SOCKET HOUSING ASSY 3C / PNEUMAC 54933-05	1	1	1	1	
300	641537	VALVE, "ABS" 24VOLT To 2-7832	1	1	1	1	
300	641951	VALVE, "ABS" 12VOLT From 2-7833	1	1	1	1	
305	641460	VALVE, "ATC" 24VOLT To 2-7832	1	1	1	1	
305	641950	VALVE, "ATC" 12VOLT From 2-7833	1	1	1	1	
350	630156	VALVE, HEIGHT CONTROL "BARKSDALE" 8"	1	1	1	1	
355	630157	VALVE, HEIGHT CONTROL "BARKSDALE" / FRONT 4½"	1	1	1	1	
355	630237	VALVE, HEIGHT CONTROL "BARKSDALE" / FRONT 4½"	1	1	1	1	
375	131351	ROD LINK / 140MM	1	1	1	1	
376	504014	HOSE CLAMP / 1/4"-5/8" SS / HM-4	AR	AR	AR	AR	
377	630117	ROD END / BLACK RUBBER 5/16" I.D.	AR	AR	AR	AR	

From Y-7046 To 8-9339		Date:07/2024	PAGE:Y2-1220-00

MISCELLANEOUS AIR VALVE

Item#	Part	Description	XLII 45	XLII MTH40	XLII MTH45	XLII MTH45E	NOTES
378	630137	SCREW SHR CAP HEX 5/16" I.D. x 1/4-20	AR	AR	AR	AR	
385	630231	LINK ASSY 185MM C/C 7 1/4"	1	1	1	1	
. A	N8889244	. GROMMET / LINK	2	2	2	2	
. B	630250	. STUD RETAINER 1/4-20 X 1"	2	2	2	2	
. C	500247	. NUT HEX 1/4-20 N500	4	4	4	4	
. D	500473	. WASHER LO SPT .262x.489x.062 Z050	4	4	4	4	
385	630232	LINK ASSY 265MM C/C 10 1/2"	1	1	1	1	
. A	N8889244	. GROMMET / LINK	2	2	2	2	
. B	630250	. STUD RETAINER 1/4-20 X 1"	2	2	2	2	
. NS	500479	. WASHER LO INT .448x.789x.040 Z050	4	4	4	4	
. NS	500473	. WASHER LO SPT .262x.489x.062 Z050	4	4	4	4	
385	630263	LINK ASSY 317MM C/C 11 1/2"	1	1	1	1	
. A	N8889244	. GROMMET / LINK	2	2	2	2	
. B	630250	. STUD RETAINER 1/4-20 X 1"	2	2	2	2	
. NS	500769	. NUT HEX 1/4-20 Z050	4	4	4	4	
. NS	500473	. WASHER LO SPT .262x.489x.062 Z050	4	4	4	4	
600	641130	MANIFOLD VALVE / W/2 SOLENOID	1	1	1	1	
600	641412	MANIFOLD VALVE / W/2 SOLENOID	1	1	1	1	
. NS	641107	. COIL 24V	2	2	2	2	
601	641180	MANIFOLD VALVE / W/3 SOLENOID	1	1	1	1	
. NS	641928	. KIT, MANIFOLD REPAIR / N.C.	3	3	3	3	
. NS	641107	. COIL 24V	1	1	1	1	
602	641906	MANIFOLD VALVE / W/4 SOLENOID	1	1	1	1	
. NS	641927	. KIT, MANIFOLD REPAIR / N.O.	1	1	1	1	
. NS	641928	. KIT, MANIFOLD REPAIR / N.C.	3	3	3	3	
. NS	641107	. COIL 24V	1	1	1	1	
. NS	642213	. MALE ELBOW 90° SWIVEL / PUSH-IN FITTING / #2x10-32 NP	1	1	1	1	
. NS	990143	. MALE CONNECTOR / PUSH-IN FITTING / W/O-RING / #2x#10-32-M BR	1	1	1	1	
. NS	641385	. CONNECTOR / SOCKET HOUSING ASSY 3C / PNEUMAC 54934-01	1	1	1	1	
. NS	641455	. REDUCER STEM / PUSH-IN FITTING / #2x#4 PLAS	1	1	1	1	
605	641107	. COIL 24V	AR	AR	AR	AR	
606	641353	. PLUNGER REPAIR KIT / MANIFOLD VALVE (1)	AR	AR	AR	AR	
607	641385	. CONNECTOR / SOCKET HOUSING ASSY 3C / PNEUMAC 54934-01	AR	AR	AR	AR	
610	641274	VALVE, 3 WAYS, 2 POSITIONS N.C.	1	1	1	1	
615	641531	VALVE, 5 WAYS, 3 POSITIONS	1	1	1	1	
. NS	641186	. SPOOL	1	1	1	1	
620	641937	VALVE, 3 WAYS, 2 POSITIONS N.C. / W/MAN OVERRIDE	1	1	1	1	
. NS	641929	. COIL 24V	1	1	1	1	
. NS	641385	. CONNECTOR / SOCKET HOUSING ASSY 3C / PNEUMAC 54934-01	1	1	1	1	
625	641528	VALVE, 3 WAYS, 2 POSITIONS N.O.	1	1	1	1	
. NS	641929	. COIL 24V	1	1	1	1	
. NS	641169	. SPOOL	1	1	1	1	

From Y-7046 To 8-9339		Date:07/2024	PAGE:Y2-1220-00

MISCELLANEOUS AIR VALVE

Item#	Part	Description	XLII 45	XLII MTH40	XLII MTH45	XLII MTH45E	NOTES
. NS	641385	. CONNECTOR / SOCKET HOUSING ASSY 3C / PNEUMAC 54934-01	1	1	1	1	
630	641530	VALVE, 3 WAYS, 2 POSITIONS / 2 SOLONOIDS	1	1	1	1	
. NS	641929	. COIL 24V	1	1	1	1	
. NS	641169	. SPOOL	1	1	1	1	
. NS	641385	. CONNECTOR / SOCKET HOUSING ASSY 3C / PNEUMAC 54934-01	1	1	1	1	
635	641527	VALVE, 4 WAYS, 2 POSITIONS	1	1	1	1	
. NS	641929	. COIL 24V	1	1	1	1	
. NS	641186	. SPOOL	1	1	1	1	
. NS	641385	. CONNECTOR / SOCKET HOUSING ASSY 3C / PNEUMAC 54934-01	1	1	1	1	
640	641357	VALVE, 3 WAYS, 2 POSITIONS N.C. / W/SPRING	1	1	1	1	
640	641356	VALVE, 3 WAYS, 2 POSITIONS N.O. / W/SPRING	1	1	1	1	
650	642023	VALVE, 5 WAYS, 2 POSITIONS 24V / MODEL V19	1	1	1	1	
. NS	641385	. CONNECTOR / SOCKET HOUSING ASSY 3C / PNEUMAC 54934-01	1	1	1	1	
		A) LOCATED IN SPARE COMPARTMENT NEAR DRIVER'S FLOOR					

From Y-7046 To 8-9339		Date:07/2024	PAGE:Y2-1220-10
BRAKE PEDAL VALVE - "BENDIX"			

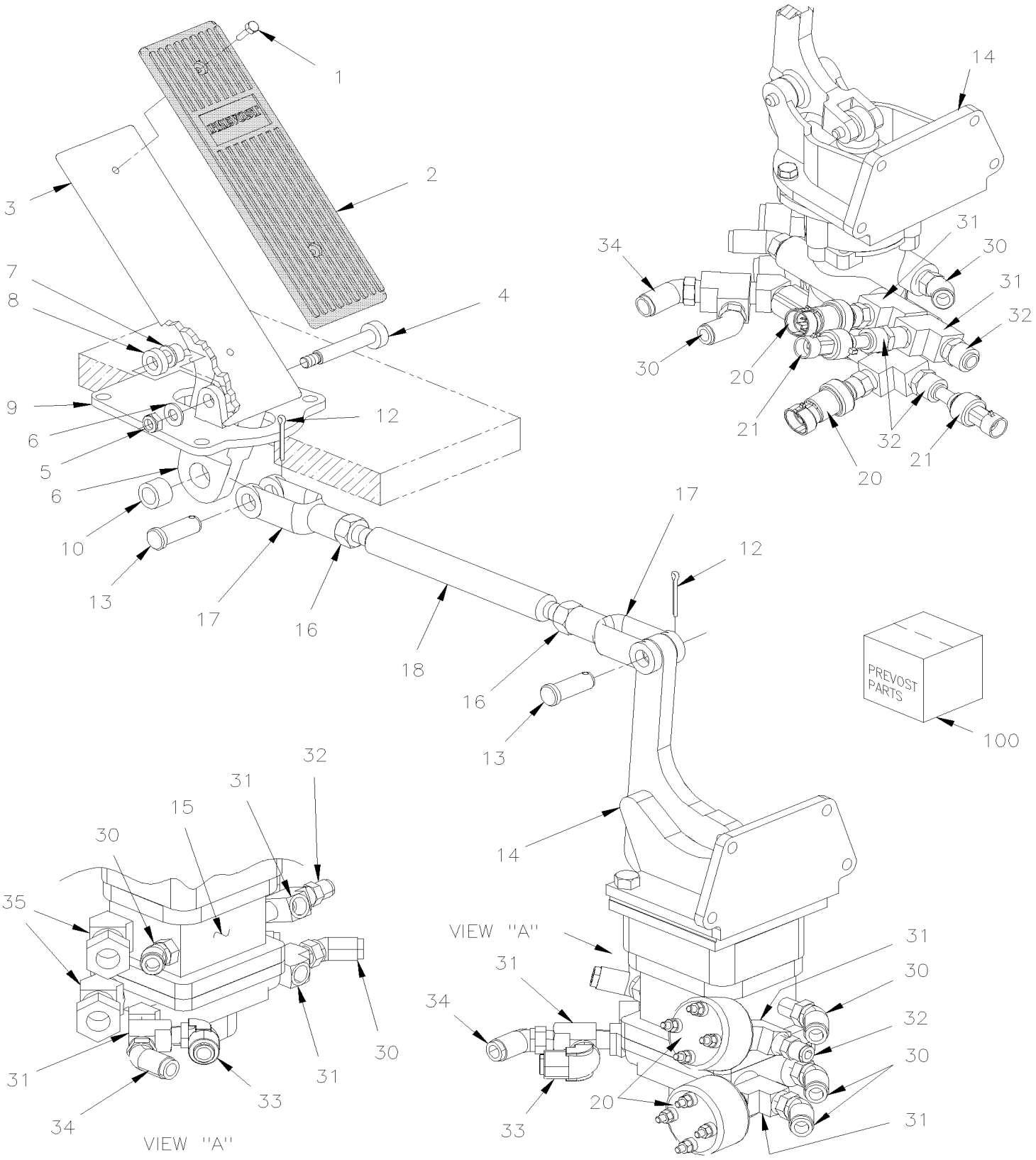

From Y-7046 To 8-9339		Date:07/2024	PAGE:Y2-1220-10

BRAKE PEDAL VALVE - "BENDIX"

Item#	Part	Description	XLII 45	XLII MTH40	XLII MTH45	XLII MTH45E	NOTES
1	500416	. SCREW MA PAN PH #10-32x1/2 BK	2	2	2	2	
2	141212	. THREADLE COVER / W/STEEL BACKING	1	1	1	1	
3	141207	. PEDAL BRAKE	1	1	1	1	
4	502575	. SCREW SHR HEXS 10x50 {M8-1.25	1	1	1	1	
5	500868	. NUT HEX NYRT M8-1.25 Z050	1	1	1	1	
6	500874	. WASHER FL 8.4x17.0x1.6 Z050	1	1	1	1	
7	507297	. FLANGE BUSHING	2	2	2	2	
8	141211	. SPACER	1	1	1	1	
9	141996	. SUPPORT ASSY / TO FIX BRAKE PEDAL	1	1	1	1	
10	507307	. BUSHING OIL 1/2 I.D. X 3/4 O.D. X 1/2	1	1	1	1	
12	502102	PIN, COTTER 1/8 x 1	1	1	1	1	
13	502035	PIN, CLEVIS 1/2 x 1 3/8 Z050	1	1	1	1	
14	641856	BRAKE VALVE ASSY W/BRACKET / MODEL E-10P	1	1	1	1	
. NS	19507993	. BOOT PLUNGER	1	1	1	1	
. NS	19510779	. PLUNGER	1	1	1	1	
. NS	2222120	. MOUNTING BRACKET COUPLING D-1	1	1	1	1	
15	641925	. VALVE SUB ASSY / MODEL E-10P	1	1	1	1	
16	500716	NUT HEX 1/2-20 Z050	2	2	2	2	
17	020317	YOKE 1/2-20x1 15/16 C/Lx9/16Wx1/2	2	2	2	2	
18	141178	SHAFT THREADED W/R.H. THREAD 260MM	1	1	1	1	
20	641462	PRESSURE SWITCH N.O. 4PSI / ¼NPT W/10-32 / SL-5 BRAKE	2	2	2	2	
21	642075	TRANSDUCER PRESSURE	2	2	2	2	
. NS	563159	. CONNECTOR / METRI-PACK 150 / SH 3C / PED 12065287	1	1	1	1	
30	641367	MALE ELBOW 45° NON-SWIVEL / PUSH-IN FITTING / #6x3/8NPT-M BR	4	4	4	4	
31	501699	MALE RUN TEE / PIPE FITTING / 3/8NPT-Mx3/8NPT-Fx3/8NPT-F BR	AR	AR	AR	AR	
32	641330	MALE CONNECTOR / PUSH-IN FITTING / #6x3/8NPT-M BR	AR	AR	AR	AR	
33	641375	MALE ELBOW 90° NON-SWIVEL / PUSH-IN FITTING / #6x3/8NPT-M BR	AR	AR	AR	AR	
34	641368	MALE ELBOW 45° NON-SWIVEL / PUSH-IN FITTING / #8x3/8NPT-M BR	AR	AR	AR	AR	
35	641602	MALE CONNECTOR / PUSH-IN FITTING / #10x3/8NPT-M BR	AR	AR	AR	AR	
36	501330	STREET ELBOW 45º / PIPE FITTING / 3/8NPT-Mx3/8NPT-F BR	AR	AR	AR	AR	
37	501305	PLUG SQUARE HEAD / PIPE FITTING / 3/8NPT-M BR	1	1	1	1	
100	640949	KIT, REPAIR / BRAKE VALVE E-10	1	1	1	1	

From Y-7046 To 8-9339		Date:07/2024	PAGE:Y2-1220-15
AIR FILTER - ACCESSORIES			

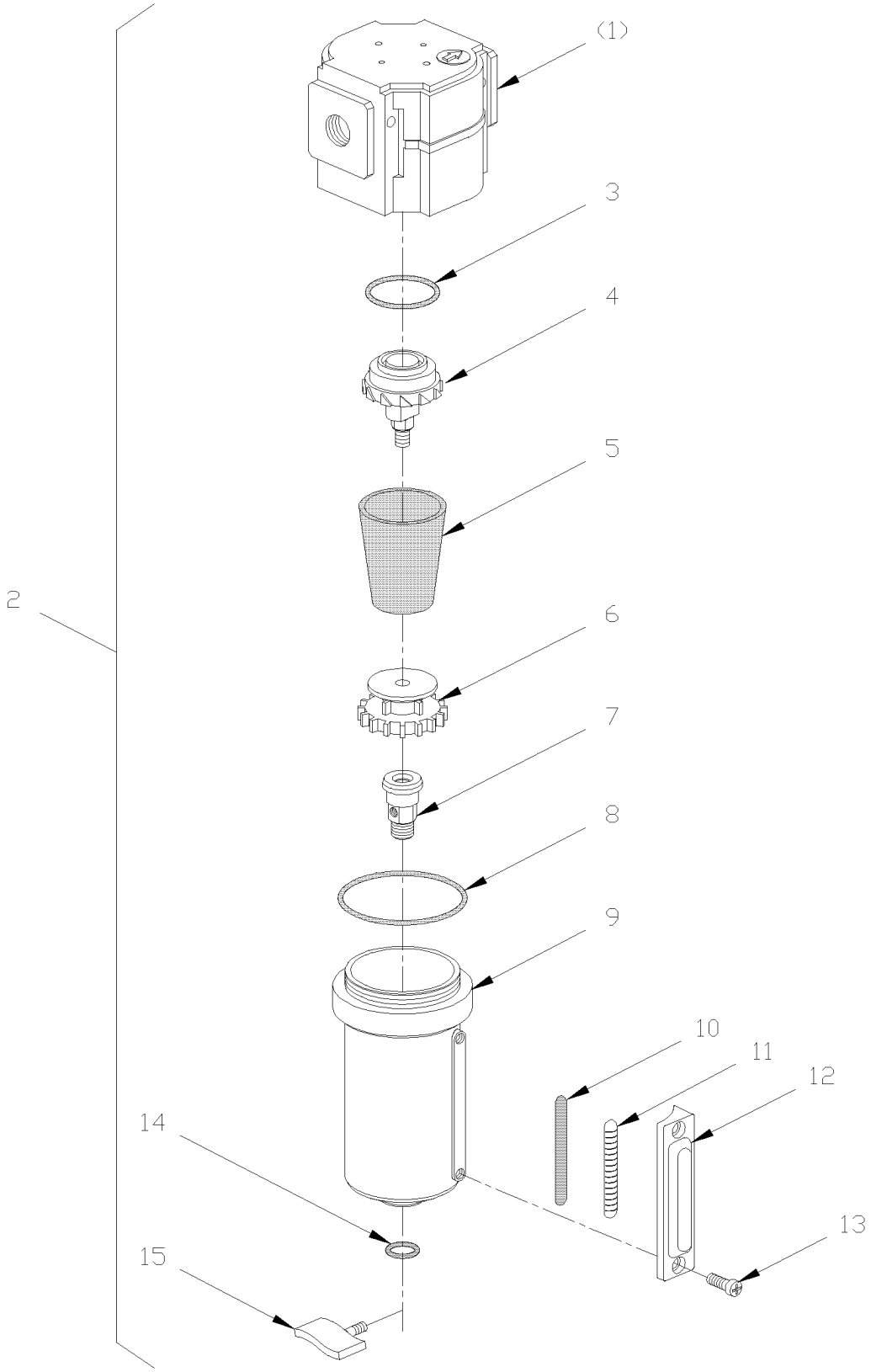

From Y-7046 To 8-9339		Date:07/2024	PAGE:Y2-1220-15

AIR FILTER - ACCESSORIES

Item#	Part	Description	XLII 45	XLII MTH40	XLII MTH45	XLII MTH45E	NOTES
1	641339	SUPPORT / AIR FILTER	1	1	1	1	
2	641338	AIR FILTER ASSY	1	1	1	1	
3	N.S.S.	. O-RING / UPPER CENTER POST	1	1	1	1	1
4	641969	. CENTER POST	1	1	1	1	
5	641340	. FILTER ELEMENT	1	1	1	1	
6	641970	. SCREW BAFFLE	1	1	1	1	
7	641971	. DRAIN VALVE BODY	1	1	1	1	
8	N.S.S.	. O-RING / UPPER BOWL	1	1	1	1	1
9	N.S.S.	. BOWL METAL	1	1	1	1	1
10	N.S.S.	. INDICATOR FILTER	1	1	1	1	1
11	N.S.S.	. GLASS / INDICATOR	1	1	1	1	1
12	N.S.S.	. RETAINER / GLASS	1	1	1	1	1
13	N.S.S.	. SCREW / TO FIX RETAINER	2	2	2	2	1
14	N.S.S.	. O-RING / LOWER BOWL	1	1	1	1	1
15	641972	. DRAIN VALVE	1	1	1	1	
16	N.S.S.	. NUT RETAINER / DRAIN VALVE	1	1	1	1	1
NS	641354	KIT, O-RING	AR	AR	AR	AR	A
NS	641355	KIT, LEVEL INDICATOR	AR	AR	AR	AR	B
NS	7770058	KIT, DRAIN VALVE	AR	AR	AR	AR	C
		A) INCLUDE ITEMS #3,8 & 14					
		B) INCLUDE ITEMS #8,10,11 & 13					
		C) INCLUDE ITEMS #7,14 & 15					
		1) NOT SOLD SEPARATELY					

From Y-7046 To 8-9339		Date:07/2024	PAGE:Y2-1220-50
TRAILER VALVE INSTALLATION			

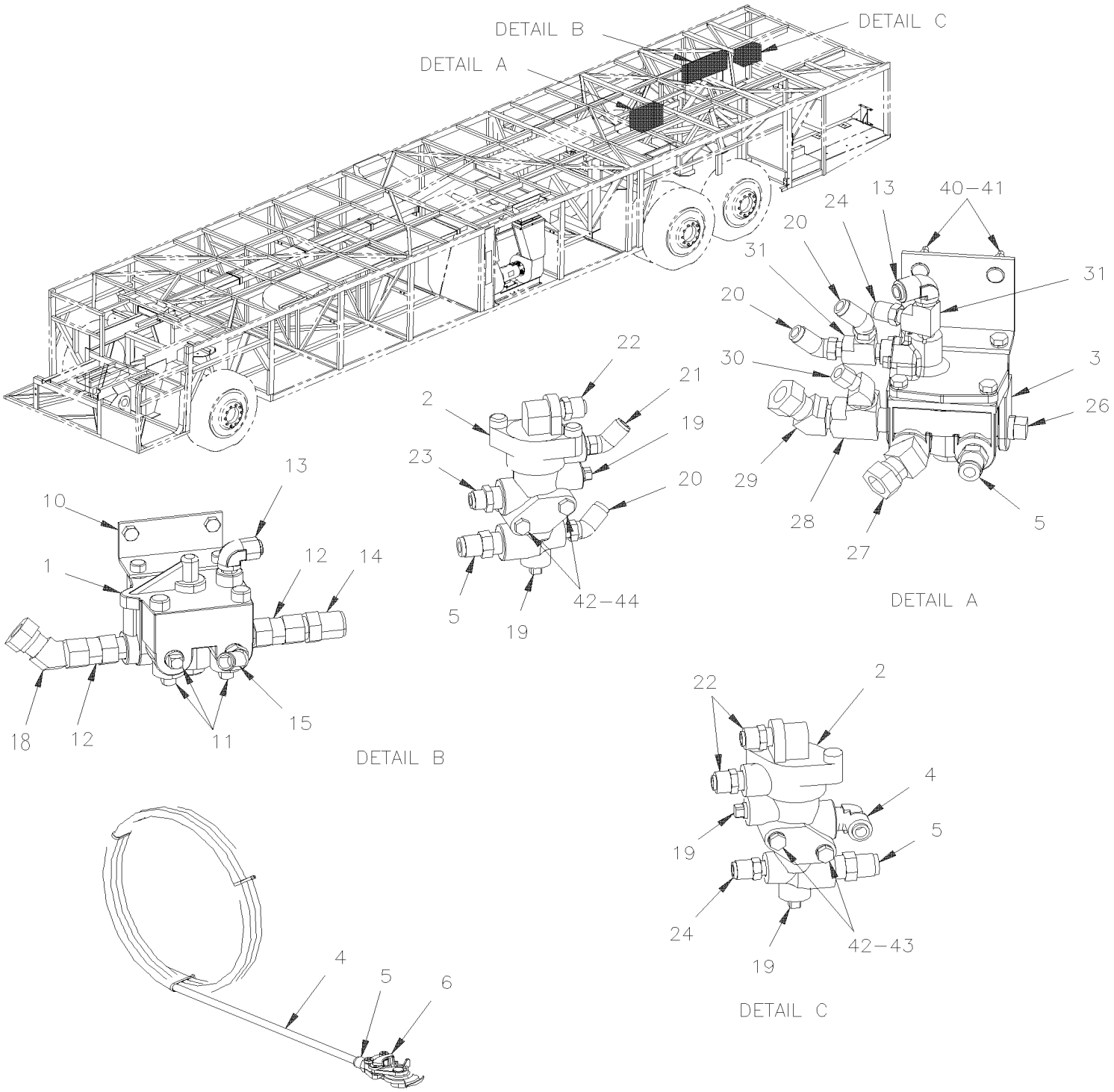

From Y-7046 To 8-9339		Date:07/2024	PAGE:Y2-1220-50
TRAILER VALVE INSTALLATION			

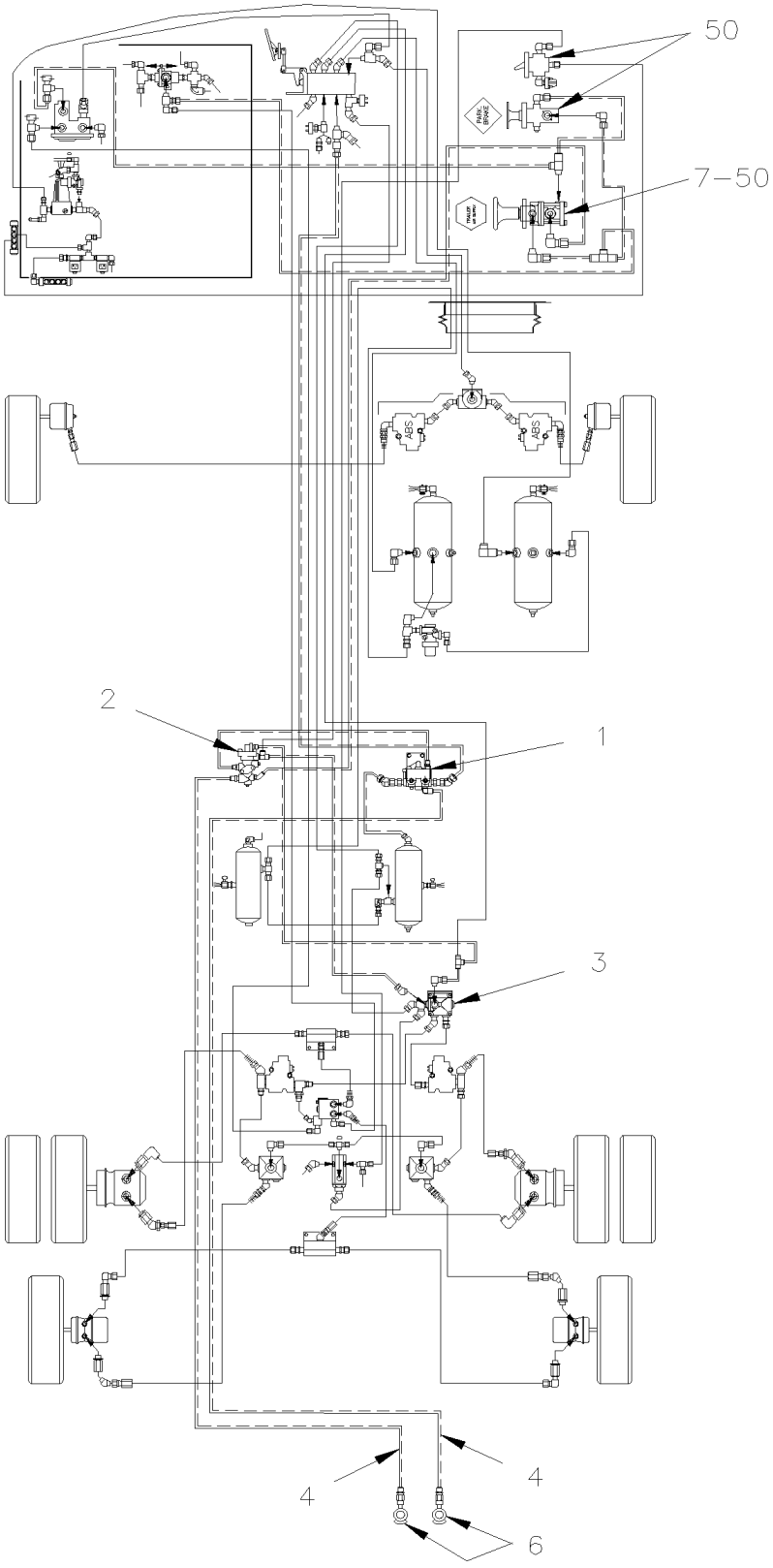

From Y-7046 To 8-9339		Date:07/2024	PAGE:Y2-1220-50

TRAILER VALVE INSTALLATION

Item#	Part	Description	XLII 45	XLII MTH40	XLII MTH45	XLII MTH45E	NOTES
1	641399	VALVE, RELAY R-12 P SUPPERSEEDED 642097	1	1	1	1	
2	641495	TRACTOR PROTECTION VALVE TP-3 DC	1	1	1	1	
3	642013	VALVE, RELAY R-12 DC	1	1	1	1	
4	503638	TUBE, NYLON 1/2 O.D. / BROWN S.L.	AR	AR	AR	AR	
4	503406	TUBE, NYLON 1/2 O.D. / GREEN S.L.	AR	AR	AR	AR	
5	640992	MALE CONNECTOR / NTA FITTING / #8x1/2NPT-M BR	AR	AR	AR	AR	
6	641938	GLANDHAND W/DUST COVER "RED"	1	1	1	1	
6	641939	GLANDHAND W/DUST COVER "BLUE"	1	1	1	1	
7	641397	TRAILER SUPPLY VALVE PP-7	1	1	1	1	
10	142312	SUPPORT VALVE R-12P "XL-II OPTION"	1				A
10	142164	SUPPORT VALVE R-12P		1	1	1	
11	501305	PLUG SQUARE HEAD / PIPE FITTING / 3/8NPT-M BR	3	3	3	3	
12	641401	VALVE, CHECK 1/2 NPT SC-1	2	2	2	2	
13	641372	MALE ELBOW 90° NON-SWIVEL / PUSH-IN FITTING / #6x1/4NPT-M BR	AR	AR	AR	AR	
14	641384	MALE CONNECTOR / PUSH-IN FITTING / #10x1/2NPT-M BR	AR	AR	AR	AR	
15	641368	MALE ELBOW 45° NON-SWIVEL / PUSH-IN FITTING / #8x3/8NPT-M BR	AR	AR	AR	AR	
16	641376	MALE ELBOW 90° NON-SWIVEL / PUSH-IN FITTING / #8x3/8NPT-M BR	AR	AR	AR	AR	
17	507557	STREET ELBOW 90º / PIPE FITTING / 1/2NPT-Mx1/2NPT-F BR	AR	AR	AR	AR	
18	641027	MALE ELBOW 45º / NTA FITTING / #10x1/2NPT-M BR	1	1	1	1	
19	501304	PLUG SQUARE HEAD / PIPE FITTING / 1/4NPT-M BR	AR	AR	AR	AR	
NS	950245	PRESSURE SWITCH N.C. 20-30 LO-UNLOAD W/WIRE BLACK	AR	AR	AR	AR	
20	641366	MALE ELBOW 45° NON-SWIVEL / PUSH-IN FITTING / #6x1/4NPT-M BR	AR	AR	AR	AR	
21	641367	MALE ELBOW 45° NON-SWIVEL / PUSH-IN FITTING / #6x3/8NPT-M BR	AR	AR	AR	AR	
22	641330	MALE CONNECTOR / PUSH-IN FITTING / #6x3/8NPT-M BR	AR	AR	AR	AR	
23	641382	MALE CONNECTOR / PUSH-IN FITTING / #6x1/2NPT-M BR	AR	AR	AR	AR	
24	641331	MALE CONNECTOR / PUSH-IN FITTING / #6x1/4NPT-M BR	AR	AR	AR	AR	
25	641175	MALE ELBOW 90º / NTA FITTING / #6x1/2NPT-M BR	AR	AR	AR	AR	
26	501306	PLUG SQUARE HEAD / PIPE FITTING / 1/2NPT-M BR	AR	AR	AR	AR	
27	641089	MALE ELBOW 45º / NTA FITTING / #8x1/2NPT-M BR	AR	AR	AR	AR	
28	501473	MALE RUN TEE / PIPE FITTING / 1/2NPT-Mx1/2NPT-Fx1/2NPT-F BR	AR	AR	AR	AR	
29	641027	MALE ELBOW 45º / NTA FITTING / #10x1/2NPT-M BR	AR	AR	AR	AR	
30	641119	MALE ELBOW 45º / NTA FITTING / #6x1/2NPT-M BR	AR	AR	AR	AR	
31	501338	MALE RUN TEE / PIPE FITTING / 1/4NPT-Mx1/4NPT-Fx1/4NPT-F BR	AR	AR	AR	AR	
40	500778	NUT HEX 5/16-18 N500	AR	AR	AR	AR	
41	500476	WASHER LO SPT .317x.586x.078 Z050	AR	AR	AR	AR	
42	502650	SCREW CAP HEX M8-1.25x80 G8.8 Z050	2	2	2	2	
43	502507	WASHER LO SPT 8.1x14.8x2.0 Z050	2	2	2	2	
44	500069	SCREW CAP HEX M8-1.25x16 G10.9 DP	2	2	2	2	
50	**Y2-1806-10**	**L.H. CONSOLE - BUS**					

From Y-7046 To 8-9339		Date:07/2024	PAGE:Y2-1220-50

TRAILER VALVE INSTALLATION

Item#	Part	Description	XLII 45	XLII MTH40	XLII MTH45	XLII MTH45E	NOTES
		A) WITH VALVE LOCATED SIDE OF AIR DRYER					

From Y-7046 To 7-9159		Date:07/2024	PAGE:Y2-1225-00
BRAKE PARTS - FRONT AXLE - W/"KNORR-BREMSE" / SB7 SERIES			

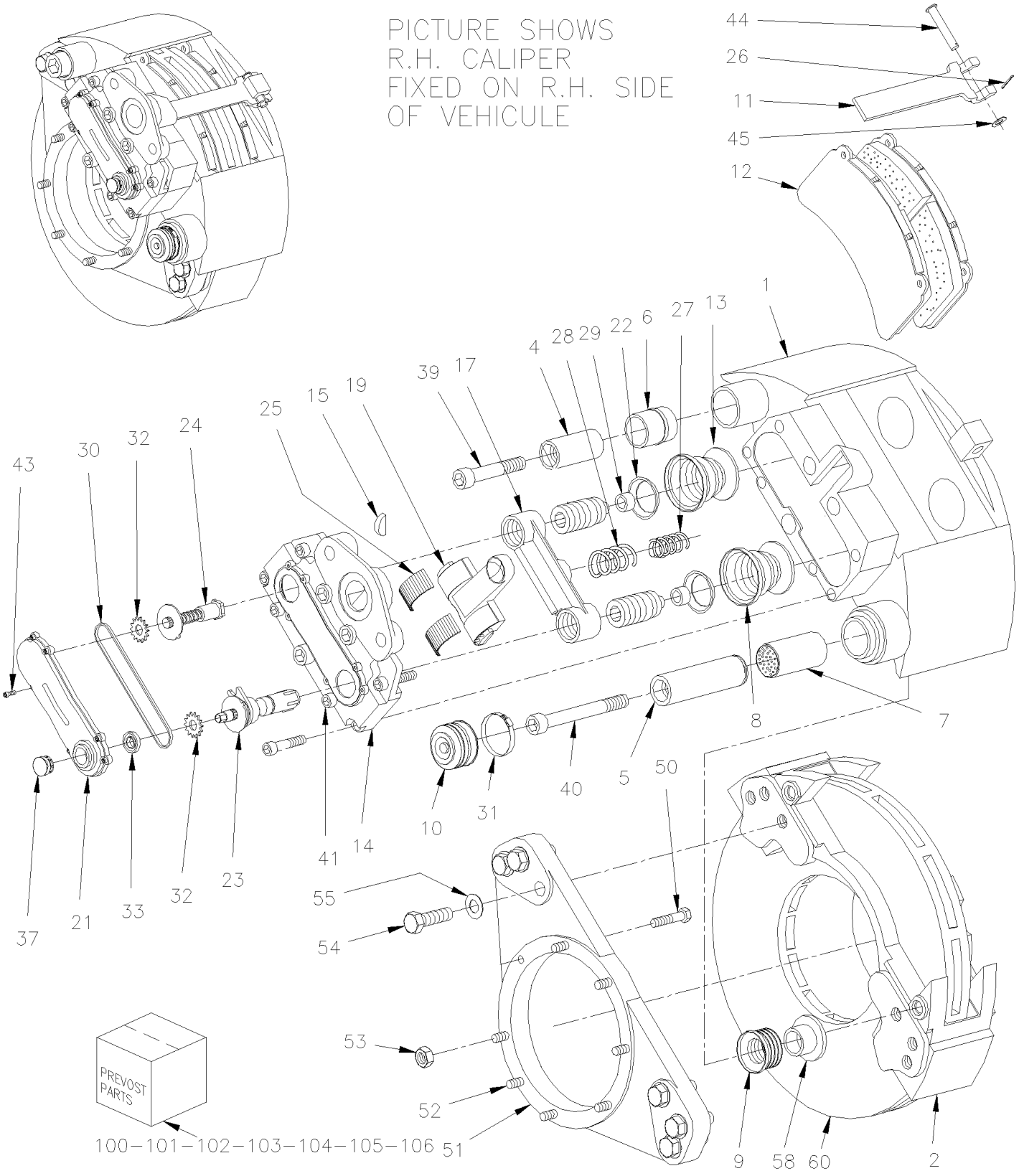

From Y-7046 To 7-9159		Date:07/2024	PAGE:Y2-1225-00

BRAKE PARTS - FRONT AXLE - W/"KNORR-BREMSE" / SB7 SERIES

Item#	Part	Description	XLII 45	XLII MTH40	XLII MTH45	XLII MTH45E	NOTES
	N.S.A.	CALIPER ASSY R.H. / W/BOOSTER TYPE 24 / (SB7703)	1	1	1	1	3
	N.S.A.	CALIPER ASSY L.H. / W/BOOSTER TYPE 24 / (SB7713)	1	1	1	1	3
NS	611184	. CALIPER ASSY R.H. / W/O BOOSTER / SB7	1	1	1	1	A
NS	611185	. CALIPER ASSY L.H. / W/O BOOSTER / SB7	1	1	1	1	A
1	N.S.S.	. . CALIPER HOUSING	1	1	1	1	1
2	611340	. . BRAKE CARRIER / W/6 HOLES BOLT RETAINERS M20-2.5	1	1	1	1	
4	N.S.S.	. . GUIDE BUSHING / SHORT	1	1	1	1	1
5	N.S.S.	. . GUIDE BUSHING / LONG	1	1	1	1	1
6	611245	. . GUIDE SLEEVE / RUBBER SB 7 SERIES	1	1	1	1	
7	611107	. . BUSHING / BRASS	1	1	1	1	
8	N.S.S.	. . BOOT RUBBER / WHITE	2	2	2	2	1
9	N.S.S.	. . BELLOW GUIDE BUSHING / RED	1	1	1	1	1
10	641421	. . BELLOW CAP / RUBBER	1	1	1	1	
11	N.S.S.	. . BRAKE PAD BRACKET	1	1	1	1	1
12	611049	. . LINING SET STD /	1	1	1	1	B
. 11	N.S.S.	. . . BRAKE PAD BRACKET	1	1	1	1	1 B
. 26	N.S.S.	. . . SPRING SPLIT PIN	1	1	1	1	1 B
. 37	641313	. . . PLUG CAP / ADJUSTING DEVICE / PLASTIC INTERIOR GRIP	1	1	1	1	B
. 44	N.S.S.	. . . CLEVIS PIN	1	1	1	1	1 B
. 45	N.S.S.	. . . WASHER	1	1	1	1	1 B
. 61	N.S.S.	. . . SHEAR ADAPTER	1	1	1	1	1 B
13	N.S.S.	. . THRUST MEMBER / INCLUDED ITEM #8	2	2	2	2	1
14	N.S.S.	. . SYNCHRONIZING HOUSING	1	1	1	1	1
15	N.S.S.	. . PLUG HALF / RUBBER	1	1	1	1	1
17	N.S.S.	. . BEAM	1	1	1	1	1
18	N.S.S.	. . O-RING	1	1	1	1	1
19	N.S.S.	. . LEVER	1	1	1	1	1
21	N.S.S.	. . COVER SYNCHRONIZING HOUSING	1	1	1	1	1
22	N.S.S.	. . BOOT	2	2	2	2	1
23	N.S.S.	. . CLEARANCE ADJUSTER	1	1	1	1	1
24	N.S.S.	. . DRIVER	1	1	1	1	1
25	N.S.S.	. . LEVER BEARING	1	1	1	1	1
26	N.S.S.	. . SPRING SPLINT PIN	1	1	1	1	1
27	N.S.S.	. . COMPRESSION SPRING	1	1	1	1	1
28	N.S.S.	. . COMPRESSION SPRING	1	1	1	1	1
29	N.S.S.	. . RING RETAINING	2	2	2	2	1
30	N.S.S.	. . ROLLER CHAIN	1	1	1	1	1
31	641420	. . PERFORATED CLIP	1	1	1	1	
32	N.S.S.	. . CHAIN DRIVE WHEEL	2	2	2	2	1
33	N.S.S.	. . SHAFT SEALING RING	1	1	1	1	1
37	641313	. . PLUG CAP / ADJUSTING DEVICE / PLASTIC INTERIOR GRIP	1	1	1	1	
38	N.S.S.	. . DOWEL	4	4	4	4	1

From Y-7046 To 7-9159		Date:07/2024	PAGE:Y2-1225-00

BRAKE PARTS - FRONT AXLE - W/"KNORR-BREMSE" / SB7 SERIES

Item#	Part	Description	XLII 45	XLII MTH40	XLII MTH45	XLII MTH45E	NOTES
39	N.S.S.	. . SCREW CAP HEXS M16-1.5x140 G10.9 ZP	1	1	1	1	1
40	N.S.S.	. . SCREW CAP HEXS M16-1.5x90 G10.9 ZP	1	1	1	1	1
41	N.S.S.	. . SOCKET HEAD CAP SCREW M14 X 60MM GR 12.9	3	3	3	3	1
43	N.S.S.	. . SOCKET HEAD CAP SCREW M5 X 12MM	8	8	8	8	1
44	N.S.S.	. . CLEVIS PIN	1	1	1	1	1
45	N.S.S.	. . WASHER	1	1	1	1	1
50	500091	SCREW CAP HEX 1/2-20x1 3/4 G5 ZP To 3-8164	3	3	3	3	O
51	611097	CALIPER MOUNTING BRACKET L.H. To 3-8164	1	1	1	1	
NS	611098	CALIPER MOUNTING BRACKET R.H. To 3-8164	1	1	1	1	
51	**Y2-1005-02**	**FRONT AXLE - I BEAM RIGID MODEL "S84U"**					
51	**Y2-1005-51**	**FRONT AXLE - INDEPENDENT MODEL "NDIFS80P" / 18000LBS**					
52	611030	STUD 1/2-20 X 1 11/16" To 3-8164	5	5	5	5	O
53	500718	NUT HEX STO 1/2-20 Z050 To 3-8164	8	8	8	8	O
54	5001193	SCREW CAP HEX M20-2.5x65 G10.9 ZP	6	6	6	6	
54	611309	SCREW CAP HEX M20-2.5x60 G10.9 DP From 4-8165		2	2	2	
55	502558	WASHER FL 21.0x37.0x3.0 G500	6	6	6	6	
58	N.S.P.	BOOT RETAINER	1	1	1	1	2
60	**Y2-1300-00**	**HUB & ROTOR - FRONT AXLE MODEL "S-84" & "IS84" To 3-8164**					
60	**Y2-1300-02**	**HUB & ROTOR - FRONT AXLE MODEL "S84U" & "NDIFS80P" From 4-8165**					
70	110786	BRAKE WEAR INDICATOR MECHANICAL / 44MM	AR	AR	AR	AR	
99	**FMBS-0BPK-10**	**BRAKE PARTS - "KNORR-BREMSE" / SB7 & SN7 "AFTERMARKET"**					
100	611054	KIT, TAPPET W/BOOT	AR	AR	AR	AR	D
. 08	N.S.S.	. BOOT RUBBER / WHITE	2	2	2	2	1 D
. 13	N.S.S.	. TAPPET	2	2	2	2	1 D
101	611168	KIT, GUIDANCE PINS & BELLOW	AR	AR	AR	AR	E
. 04	N.S.S.	. GUIDE BUSHING / SHORT	1	1	1	1	1 E
. 05	N.S.S.	. GUIDE BUSHING / LONG	1	1	1	1	1 E
. 06	611245	. GUIDE SLEEVE / RUBBER SB 7 SERIES	1	1	1	1	E
. 07	611107	. BUSHING / BRASS	1	1	1	1	E
. 09	N.S.S.	. BELLOW GUIDE BUSHING / RUBBER RED	1	1	1	1	1 E
. 10	641421	. BELLOW CAP / RUBBER	1	1	1	1	E
. 31	641420	. PERFORATED CLIP	1	1	1	1	E
. 39	N.S.S.	. SCREW CAP HEXS	1	1	1	1	1 E
. 40	N.S.S.	. SCREW CAP HEXS	1	1	1	1	1 E
. 58	N.S.S.	. PLASTIC RING / BOOT RETAINER	1	1	1	1	1 E
102	611177	KIT, BOOT PROTECTOR & TAPPET	AR	AR	AR	AR	F
. 08	N.S.S.	. BOOT RUBBER / WHITE	1	1	1	1	1 F
. 13	N.S.S.	. TAPPET	1	1	1	1	1 F
. 29	N.S.S.	. RING RETAINING / TAPPET	1	1	1	1	1 F
103	611179	KIT, CARRIER & GUIDING PIN	AR	AR	AR	AR	G
. 02	611340	. BRAKE CARRIER / W/6 HOLES BOLT RETAINERS M20-2.5	1	1	1	1	G
. 04	N.S.S.	. GUIDE BUSHING / SHORT	1	1	1	1	1 G

From Y-7046 To 7-9159		Date:07/2024	PAGE:Y2-1225-00

BRAKE PARTS - FRONT AXLE - W/"KNORR-BREMSE" / SB7 SERIES

Item#	Part	Description	XLII 45	XLII MTH40	XLII MTH45	XLII MTH45E	NOTES
. 05	N.S.S.	. GUIDE BUSHING / LONG	1	1	1	1	1 G
. 39	N.S.S.	. SCREW CAP HEXS	1	1	1	1	1 G
. 40	N.S.S.	. SCREW CAP HEXS	1	1	1	1	1 G
104	641402	KIT, PAD HOLDER	AR	AR	AR	AR	H
. 26	N.S.S.	. SPRING SPLIT PIN	1	1	1	1	1 H
. 44	N.S.S.	. CLEVIS PIN	1	1	1	1	1 H
. 45	N.S.S.	. WASHER	1	1	1	1	1 H
105	611199	KIT, BOOT & SEAL	AR	AR	AR	AR	I
. 09	N.S.S.	. BELLOW GUIDE BUSHING / RUBBER RED	1	1	1	1	1 I
. 10	641421	. BELLOW CAP / RUBBER	1	1	1	1	I
. 31	641420	. PERFORATED CLIP	1	1	1	1	I
. 37	641313	. PLUG CAP / ADJUSTING DEVICE / PLASTIC INTERIOR GRIP	1	1	1	1	I
. 58	N.S.S.	. PLASTIC RING / BOOT RETAINER	1	1	1	1	1 I
105	683344	GREASE GREEN / 5GR	AR	AR	AR	AR	J
105	641931	GREASE GREEN / 500GR	AR	AR	AR	AR	J
105	683345	GREASE WHITE / 5GR	AR	AR	AR	AR	K
105	641930	GREASE WHITE / 500GR	AR	AR	AR	AR	K
105	641321	TOOL / THRUST MEMBER W/BELLOW	AR	AR	AR	AR	L
105	641322	TOOL / CALIPER INNER BELLOW	AR	AR	AR	AR	M
105	641323	TOOL / BUSHING INSTALLER / SERIES SB	AR	AR	AR	AR	N
105	641444	TOOL / GROOVING BUSHING	AR	AR	AR	AR	N
105	641435	TOOL / FORK (FOR BELLOW CAP)	AR	AR	AR	AR	L
106	611246	KIT,GUIDANCE PIN & RUBBER BUSHING / SHORT PIN	AR	AR	AR	AR	C
. 04	N.S.S.	. GUIDE BUSHING / SHORT	1	1	1	1	1 C
. 06	611245	. GUIDE SLEEVE / RUBBER SB 7 SERIES	1	1	1	1	C
. 39	N.S.S.	. SCREW CAP HEXS	1	1	1	1	1 C
107	641427	KIT BOOT & CLIP	AR	AR	AR	AR	P
. 10	641421	. BELLOW CAP / RUBBER	1	1	1	1	P
. 31	641420	. PERFORATED CLIP	1	1	1	1	P
		A) INCLUDES ITEM #2 BUT NOT ITEM # 12					
		B) INCLUDES ITEMS #11, 26, 37, 44, 45 & 61					
		C) INCLUDE ITEMS #4,6 & 39					
		D) INCLUDE 2 OF ITEMS #8 & 13					
		E) INCLUDE ITEMS #4,5,6,7,9,10,31,39,40 & 58					
		F) INCLUDE ITEMS #8,13 & 29					
		G) INCLUDE ITEMS #2,4,5,39 & 40					
		H) INCLUDES ITEMS #11,26,44 & 45					
		I) INCLUDE ITEMS #9,10,31,37 & 58					
		J) FOR ITEM #4 & 6					

From Y-7046 To 7-9159		Date:07/2024	PAGE:Y2-1225-00

BRAKE PARTS - FRONT AXLE - W/"KNORR-BREMSE" / SB7 SERIES

Item#	Part	Description	XLII 45	XLII MTH40	XLII MTH45	XLII MTH45E	NOTES
		K) FOR ITEMS #5 & 7					
		L) TO USE W/ITEMS #8 & 13					
		M) TO USE W/ITEM #9					
		N) TO USE W/ITEM #7					
		O) TO FIX SPIDER					
		P) INCLUDE ITEM #10 & 31					
		1) NOT SOLD SEPARATELY					
		2) NOT SOLD BY PREVOST (SEE MANUFACTURING PART NUMBER AT END OF DESCRIPTION LINE)					
		3) NOT SOLD ASSEMBLY					
		1) NOT SOLD SEPARATELY					

From 7-9160 To 8-9339		Date:07/2024	PAGE:Y2-1225-01
BRAKE PARTS "KNORR-BREMSE" SN7 SERIES			

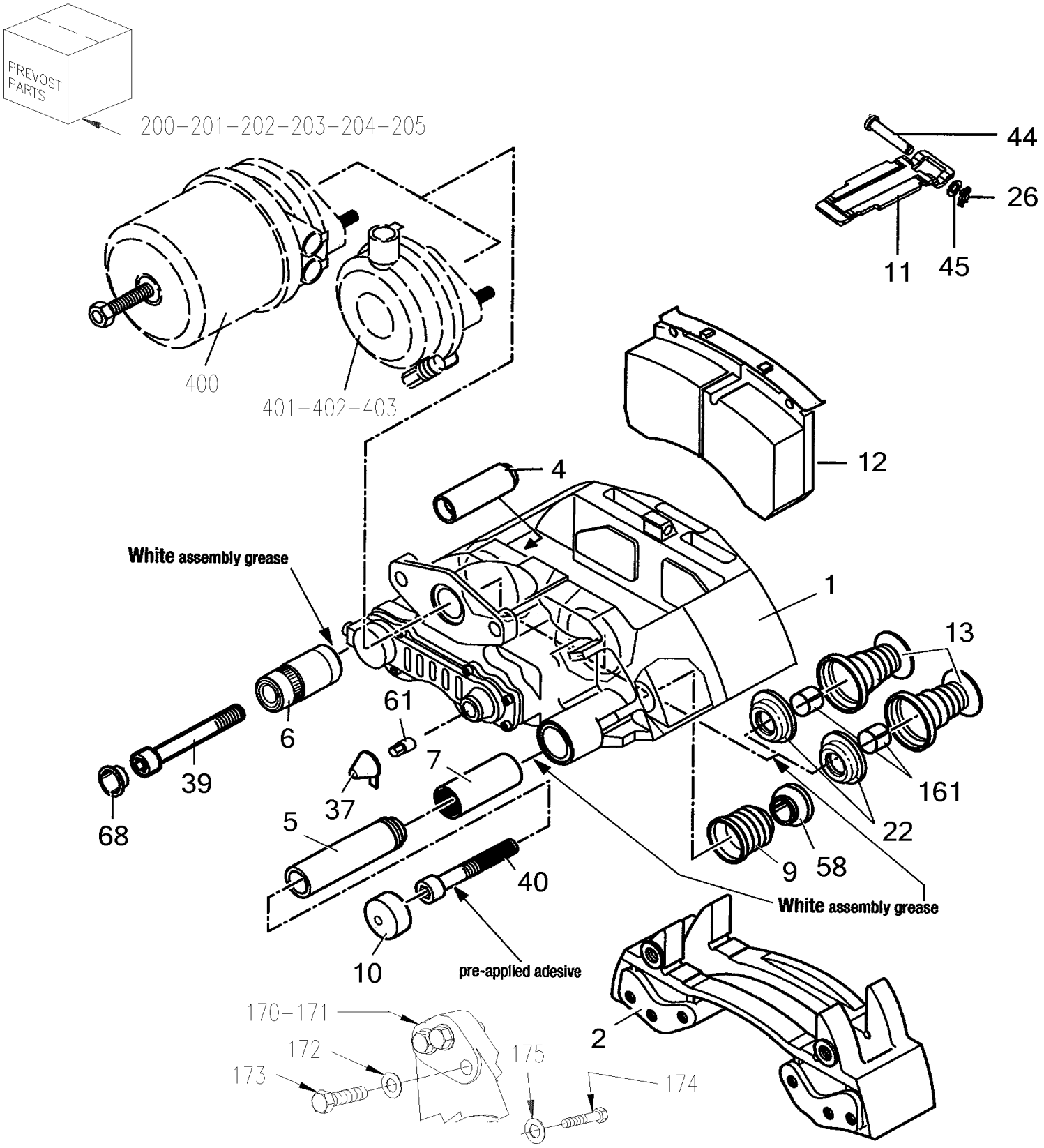

From 7-9160 To 8-9339		Date:07/2024	PAGE:Y2-1225-01

BRAKE PARTS "KNORR-BREMSE" SN7 SERIES

Item#	Part	Description	XLII 45	XLII MTH40	XLII MTH45	XLII MTH45E	NOTES
	611341	CALIPER ASSY R.H. / W/O BOOSTER / SN7	1	1	1	1	A
	611342	CALIPER ASSY L.H. / W/O BOOSTER / SN7	1	1	1	1	A
1	N.S.S.	. CALIPER HOUSING	1	1	1	1	1
2	611960	. BRAKE CARRIER / W/6 HOLES BOLT RETAINERS M20-1.5	1	1	1	1	
4	N.S.S.	. . GUIDE BUSHING / SHORT	1	1	1	1	1
5	N.S.S.	. . GUIDE BUSHING / LONG	1	1	1	1	1
6	N.S.S.	. . GUIDE SLEEVE	1	1	1	1	1
7	611107	. . BUSHING / BRASS	1	1	1	1	
8	N.S.S.	. . BOOT RUBBER / WHITE	2	2	2	2	1
9	N.S.S.	. . BELLOW GUIDE BUSHING / RED	1	1	1	1	1
10	N.S.S.	. . STEEL CAP	1	1	1	1	1
11	N.S.S.	. . BRAKE PAD BRACKET	1	1	1	1	1
12	611049	. . LINING SET STD /	1	1	1	1	B
. 11	N.S.S.	. . . BRAKE PAD BRACKET	1	1	1	1	1 B
. 26	N.S.S.	. . . SPRING SPLIT PIN	1	1	1	1	1 B
. 37	641313	. . . PLUG CAP / ADJUSTING DEVICE / PLASTIC INTERIOR GRIP	1	1	1	1	B
. 44	N.S.S.	. . . CLEVIS PIN	1	1	1	1	1 B
. 45	N.S.S.	. . . WASHER	1	1	1	1	1 B
. 61	N.S.S.	. . . SHEAR ADAPTER	1	1	1	1	1 B
13	N.S.S.	. . TAPPET WITH BOOT ASSY	2	2	2	2	1
22	N.S.S.	. . BOOT	2	2	2	2	1
26	N.S.S.	. . SPRING SPLINT PIN	1	1	1	1	1
37	N.S.S.	. . PLUG CAP / ADJUSTING DEVICE	1	1	1	1	1
39	N.S.S.	. . SCREW CAP HEXS ZP M16-1.5 GR10.9	1	1	1	1	1
40	N.S.S.	. . SCREW CAP HEXS ZP M16-1.5 GR10.9	1	1	1	1	1
44	N.S.S.	. . CLEVIS PIN	1	1	1	1	1
45	N.S.S.	. . WASHER	1	1	1	1	1
58	N.S.S.	. . RING	1	1	1	1	1
61	N.S.S.	. . SHEAR ADAPTER	1	1	1	1	1
68	N.S.S.	. . CAP	1	1	1	1	1
70	110786	BRAKE WEAR INDICATOR MECHANICAL / 44MM	AR	AR	AR	AR	
99	**FMBS-0BPK-10**	**BRAKE PARTS - "KNORR-BREMSE" / SB7 & SN7 "AFTERMARKET"**					
161	N.S.S.	. RING RETAINING	2	2	2	2	1
170	**Y2-1005-00**	**FRONT AXLE - I BEAM RIGID MODEL "S-84" To 3-8164**					
170	**Y2-1005-01**	**FRONT AXLE - I BEAM RIGID MODEL "NSD80" From 1-7455 To 1-7455**					
170	**Y2-1005-02**	**FRONT AXLE - I BEAM RIGID MODEL "S84U" From 4-8165**					
170	**Y2-1005-50**	**FRONT AXLE - INDEPENDENT MODEL "IS-84" / 16500LBS To 3-8164**					
170	**Y2-1005-51**	**FRONT AXLE - INDEPENDENT MODEL "NDIFS80P" / 18000LBS From 4-8165**					
170	**Y2-1105-00**	**REAR AXLE - MODEL "RC23160"**					
170	**Y2-1615-00**	**TAG AXLE - INSTALL SUSPENSION**					
171	621709	CALIPER MOUNTING BRACKET L.H. & R.H. W/OUT BUSHING	1	1	1	1	D
172	502558	WASHER FL 21.0x37.0x3.0 G500	6	6	6	6	

From 7-9160 To 8-9339		Date:07/2024	PAGE:Y2-1225-01

BRAKE PARTS "KNORR-BREMSE" SN7 SERIES

Item#	Part	Description	XLII 45	XLII MTH40	XLII MTH45	XLII MTH45E	NOTES
173	5001529	SCREW CAP HEX M20-1.5x60 G10.9 G500	6	6	6	6	
174	621636	SCREW CAP HEX / TO FIX BRACKET TO AXLE 9/16-18 X 2 GR 8	24	24	24	24	D
175	621365	WASHER (HARD) .59IDX.97ODX.09	24	24	24	24	D
200	642032	KIT, TAPPET W/BOOT	AR	AR	AR	AR	C
201	642031	KIT, GUIDANCE PINS & BELLOW / SN W/39MM BUSHING END	AR	AR	AR	AR	E
202	642034	KIT, PLUG CAP W/AJUSTING DEVICE (PACK of 10x #37, #37a & 61)	AR	AR	AR	AR	S
203	641402	KIT, PAD HOLDER	AR	AR	AR	AR	H
. 26	N.S.S.	. SPRING SPLIT PIN	1	1	1	1	1 H
. 44	N.S.S.	. CLEVIS PIN	1	1	1	1	1 H
. 45	N.S.S.	. WASHER	1	1	1	1	1 H
205	683345	GREASE WHITE / 5GR	AR	AR	AR	AR	K
205	641930	GREASE WHITE / 500GR	AR	AR	AR	AR	K
NS	641321	TOOL / THRUST MEMBER W/BELLOW	AR	AR	AR	AR	L
NS	641322	TOOL / CALIPER INNER BELLOW	AR	AR	AR	AR	M
NS	642074	TOOL / BUSHING INSTALLER / SERIES SN	AR	AR	AR	AR	N
NS	641435	TOOL / FORK (FOR BELLOW CAP)	AR	AR	AR	AR	L
NS	641993	TOOL / PRESS IN COVER	AR	AR	AR	AR	X
NS	641994	TOOL / BUSHING - INSTALLER	AR	AR	AR	AR	Y
NS	641998	TOOL / RUBBER BUSHING - INSTALLER	AR	AR	AR	AR	Z
NS	642035	KIT TOOL BOX "KNORR BREMSE" SERIE SN7	AR	AR	AR	AR	
400	**Y2-1235-10**	**BRAKE CHAMBER - DRIVE AXLE "KNORR-BREMSE"**					
401	**Y2-1225-11**	**BRAKE CHAMBER - FRONT AXLE TYPE 24**					
402	**Y2-1245-12**	**BRAKE CHAMBER - TAG AXLE TYPE 14 & 16**					
500	Y006471_000_EN	MAINTENANCE MANUAL / ENGLISH KNORR-BREMSE					
NS	Y006471_000_FF	MANUEL D'ENTRETIEN / FRANÇAIS KNORR-BREMSE					
		A) DO NOT INCLUDE ITEM #2 & #12					
		B) INCLUDES ITEMS #11, 26, 37, 44, 45 & 61					
		C) INCLUDES 2 OF ITEMS #13, 22 & 161					
		D) ON DRIVE AXLE ONLY					
		E) INCLUDES ITEMS #4, 5, 6, 7, 9, 10, 39, 40, 58 & 68					
		H) INCLUDES ITEMS #11,26,44 & 45					
		K) FOR ITEMS #5 & 7					
		L) TO USE W/ITEMS #13					
		M) TO USE W/ITEM #9					
		N) TO USE W/ITEM #7					
		S) INCLUDES 10 ITEMS #37 AND 61					
		X) TO USE WITH ITEM #10					
		Y) TO USE WITH ITEM 6					
		Z) TO USE WITH ITEM #68					

From 7-9160 To 8-9339		Date:07/2024	PAGE:Y2-1225-01

BRAKE PARTS "KNORR-BREMSE" SN7 SERIES

Item#	Part	Description	XLII 45	XLII MTH40	XLII MTH45	XLII MTH45E	NOTES
		1) NOT SOLD SEPARATELY					
		1) NOT SOLD SEPARATELY					

From 7-9160 To 8-9339		Date:07/2024	PAGE:Y2-1005-02
FRONT AXLE - I BEAM RIGID MODEL "S84U"			

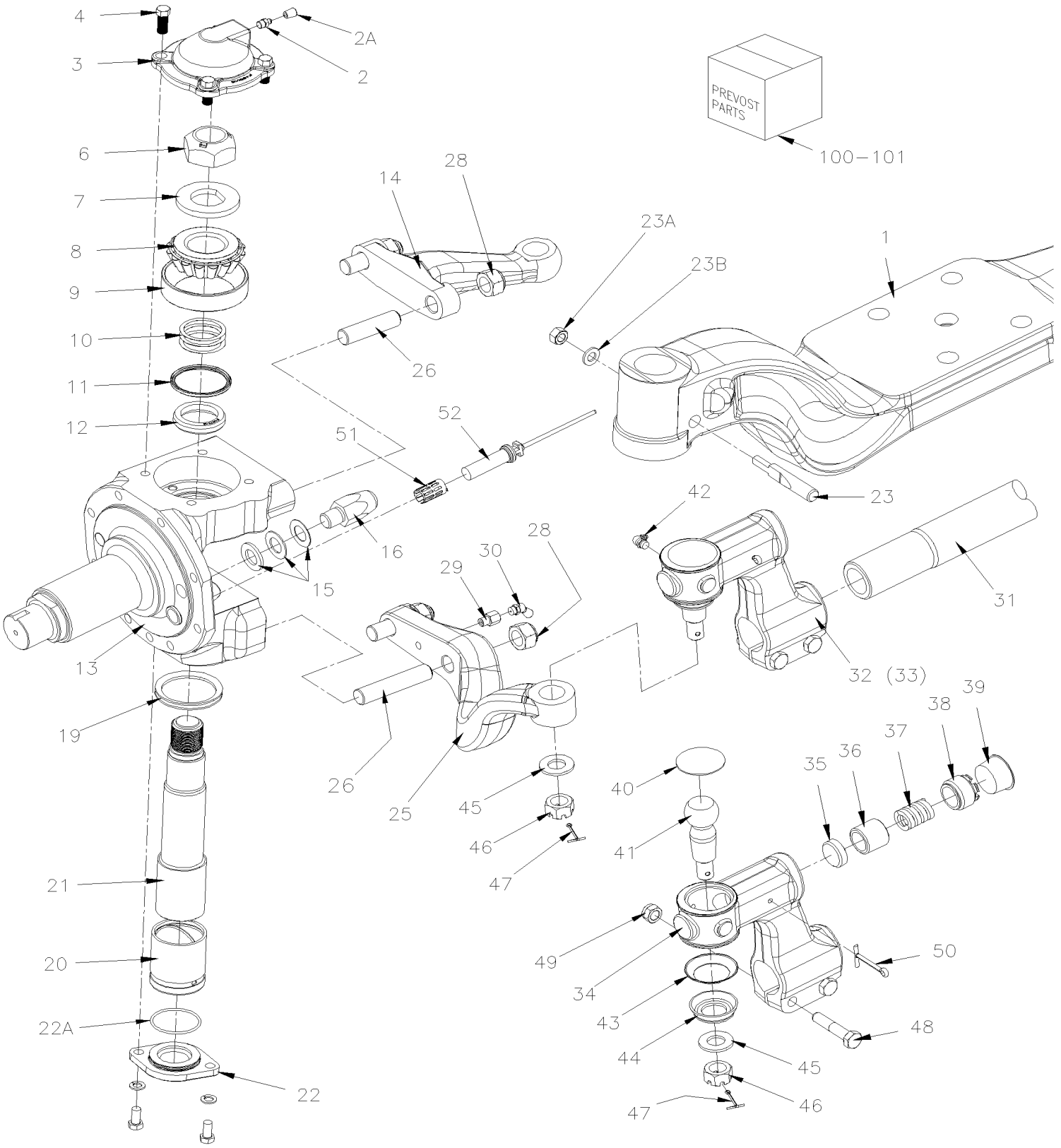

From 7-9160 To 8-9339		Date:07/2024	PAGE:Y2-1005-02

FRONT AXLE - I BEAM RIGID MODEL "S84U"

Item#	Part	Description	XLII 45	XLII MTH40	XLII MTH45	XLII MTH45E	NOTES
	611269	AXLE ASSY W/ABS / MODEL "S84U" W/TYPE 27 BOOSTER To 6-8906	1				
	612350	AXLE ASSY W/ABS / MODEL "S84U" W/TYPE 24 BOOSTER	1				
1	611454	. AXLE BEAM	1				
2	501491	. GREASE FITTING / 1/8 NPTx3/4"	2				
2A	504615	. PROTECTOR CAP / BLACK / .313 I.D. x .500	2				
3	611008	. CAP COVER	2				
4	500067	. SCREW CAP HEX 7/16-20x1 G5 Z050	4				
4	680404	. . CAP PLUG	1				
4	500447	. WASHER FL .562x1.375x.109 ZP	4				
6	611153	. NUT HEX STO 1 3/8"-12	2				
7	611010	. WASHER 38.23x69.85x7	2				
8	611011	. CONE BEARING	2				
9	611012	. CUP BEARING	2				
10	611017	. WASHER SHIM / .015"	AR				
10	611016	. WASHER SHIM / .010"	AR				
10	611015	. WASHER SHIM / .008"	AR				
10	611014	. WASHER SHIM / .006"	AR				
10	611013	. WASHER SHIM / .005"	AR				
11	611145	. OIL SEAL	2				
12	611154	. SLEEVE	2				
13	611290	. KNUCKLE R.H. CURBSIDE	1				
13	611289	. KNUCKLE L.H. STREET SIDE	1				
14	611031	. STEERING ARM UPPER L.H. STREET SIDE	1				
14	161033	. STEERING ARM UPPER R.H. CURBSIDE	1				
15	611042	. WASHER SHIM / 1/32" TH	AR				
15	611041	. WASHER SHIM / 1/16" TH	AR				
15	611040	. WASHER SHIM / 1/8" TH	AR				
16	611170	. SWIVEL STOP SCREW 43MM	2				
NS	611296	. SWIVEL STOP SCREW 54MM	2				
19	611020	. V-SEAL	2				
NS	611152	. SEAL RING	2				
20	611144	. BUSHING LOWER KING PIN	2				
21	611148	. KING PIN	2				
22	611155	. CAP LOWER / KING PIN	2				
22	612364	. SCREW 3/8-24	4				
22	612363	. WASHER	4				
22A	611156	. O-RING	2				
23	611258	. SWIVEL PIN LOCK	2				
23A	610029	. NUT 7/16 UNF	1				
23B	5001200	. WASHER FL .453x.875x.090	1				
25	611032	. STEERING ARM LOWER L.H. STREET SIDE	1				
NS	611033	. STEERING ARM LOWER R.H. CURBSIDE	1				

From 7-9160 To 8-9339		Date:07/2024	PAGE:Y2-1005-02

FRONT AXLE - I BEAM RIGID MODEL "S84U"

Item#	Part	Description	XLII 45	XLII MTH40	XLII MTH45	XLII MTH45E	NOTES
26	611291	. STUD 3/4-16 X 4"	4				
26	611028	. STUD / STREET SIDE / 3/4-16 X 3"	2				
26	611029	. STUD / TO FIX LOWER ARM 3/4-16 X 3 5/8"	2				
28	5001196	. NUT HEX SLT 3/4-16	8				
29	611062	. ADAPTER / BSP FITTING / 1/8BSP-Mx1/8NPT-F	2				
30	501493	. GREASE FITTING 45º / 1/8 NPT	2				
NS	504615	. PROTECTOR CAP / BLACK / .313 I.D. x .500	2				
31	611292	. ROD	1				
32	611024	. TIE ROD ASSY / 5" OFFSET / R.H. THREAD M48-2 CURB SIDE	1				
33	611025	. TIE ROD ASSY / 5" OFFSET / L.H. THREAD M48-2 STREET SIDE	1				
34	N.S.S.	. . HOUSING / OFFSET L.H. THREAD	1				1
34	N.S.S.	. . HOUSING / OFFSET R.H. THREAD	1				1
35	N.S.P.	. . RUBBING PAD / (7157/156)	1				2
36	N.S.P.	. . THRUST CUP / (7157/153)	1				2
37	N.S.P.	. . COMPRESSION SPRING / (5443/4)	1				2
38	N.S.P.	. . ADJUSTER PIECE / (5443/154)	1				2
39	680404	. . CAP PLUG	1				
40	N.S.P.	. . PLUG / (5247/155)	1				2
40	N.S.P.	. . SNAP RING / (ML7544/55N)	1				2
41	N.S.P.	. . BALL STUD / (F4223/11)	1				2
42	501495	. . GREASE FITTING 90º / 1/8 NPT	2				
43	611056	. . DIRT SEAL PRESSING	1				
44	611057	. . RUBBER SEAL BOOT	1				
45	500420	. . WASHER FL .938x1.750x.134 ZP	1				
46	5001196	. . NUT HEX SLT 3/4-16	1				
47	502111	. . PIN, COTTER 1/8 x 1 1/2 SS	1				
48	5001861	. . SCREW CAP HEX M12-1.75x60 G10.9 N500	2				
49	500811	. . NUT HEX STO M12-1.75 G500	2				
50	502115	. . PIN, COTTER 3/16 x 2 1/2	1				
51	641096	. CLIP, SPRING / TO FIX SENSOR	2				
52	641288	. SENSOR ABS (ON FRONT AXLE) 90° ANGLE	2				
100	611966	KIT REPAIR / STEERING KNUCKLE BUSHING (PARALLEL) / (REQUIRES 2 KITS)	AR				B
101	611101	KIT REPAIR / TIE ROD END	2				A
102	IS18091	TIE ROD 610052 FIRST INSTALLATION INSTRUCTIONS	1				
. NS	610052	. TIE ROD ASSY	1				
. NS	610051	. NUT HEX SLO / SINGLE USE M24-1.5	2				
. NS	IS-18091	. SEE INSTRUCTION SHEET	1				
. NS	FI-18091	. VOIR FEUILLE D'INSTRUCTION	1				

From 7-9160 To 8-9339		Date:07/2024	PAGE:Y2-1005-02

FRONT AXLE - I BEAM RIGID MODEL "S84U"

Item#	Part	Description	XLII 45	XLII MTH40	XLII MTH45	XLII MTH45E	NOTES
		A) INCLUDING ITEMS #35 TO 50					
		B) INCLUDING ITEMS # 4 TO 12 & # 19 TO 21 & 23					
		1) NOT SOLD SEPARATELY					
		2) NOT SOLD BY PREVOST (SEE MANUFACTURING PART NUMBER AT END OF DESCRIPTION LINE)					

From Y-7046 To 8-9339		Date:07/2024	PAGE:Y2-1225-02
BRAKE PARTS "KNORR-BREMSE" SN7 SERIES W/NEW SLIDE PINS			

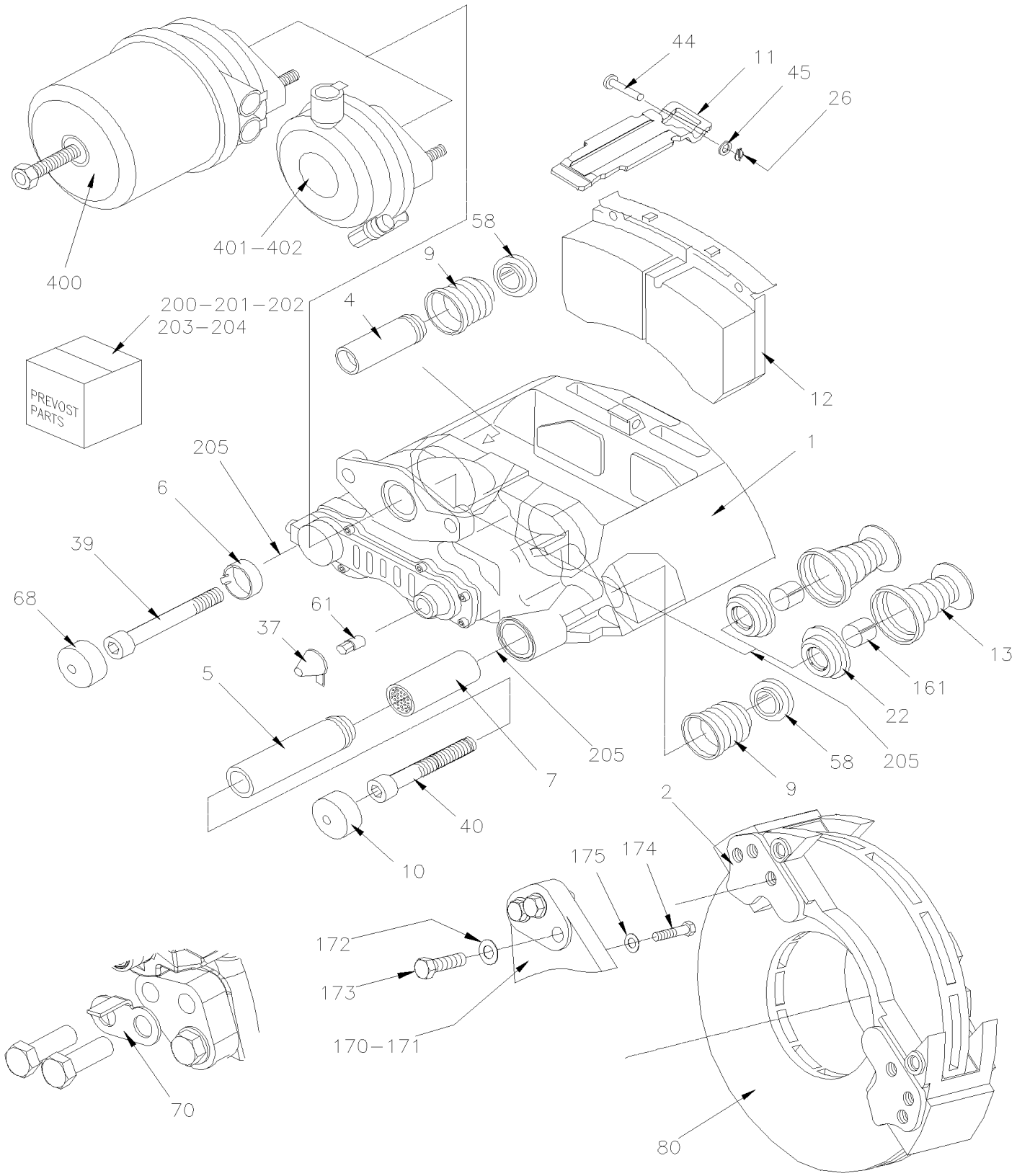

From Y-7046 To 8-9339		Date:07/2024	PAGE:Y2-1225-02

BRAKE PARTS "KNORR-BREMSE" SN7 SERIES W/NEW SLIDE PINS

Item#	Part	Description	XLII 45	XLII MTH40	XLII MTH45	XLII MTH45E	NOTES
	642134	CALIPER ASSY R.H. FRONT & TAG OR L.H. DRIVE AXLE / W/O BOOSTER SN7	1	1	1	1	
	642139	CALIPER ASSY L.H. FRONT & TAG OR R.H. DRIVE AXLE / W/O BOOSTER SN7	1	1	1	1	
1	N.S.S.	. CALIPER HOUSING	1	1	1	1	1
2	611960	. BRAKE CARRIER / W/6 HOLES BOLT RETAINERS M20-1.5	1	1	1	1	
4	N.S.S.	. . GUIDE BUSHING / SHORT	1	1	1	1	1
5	N.S.S.	. . GUIDE BUSHING / LONG	1	1	1	1	1
6	N.S.S.	. . GUIDE BUSHING / DU	1	1	1	1	1
7		. . BUSHING / BRASS	1	1	1	1	
8	N.S.S.	. . BOOT RUBBER / WHITE	2	2	2	2	1
9	N.S.S.	. . BELLOW GUIDE BUSHING / RED	2	2	2	2	1
10	N.S.S.	. . STEEL CAP	1	1	1	1	1
11	N.S.S.	. . BRAKE PAD BRACKET	1	1	1	1	1
12	611049	. . LINING SET STD /	1	1	1	1	B
. 11	N.S.S.	. . . BRAKE PAD BRACKET	1	1	1	1	1 B
. 26	N.S.S.	. . . SPRING SPLIT PIN	1	1	1	1	1 B
. 37	641313	. . . PLUG CAP / ADJUSTING DEVICE / PLASTIC INTERIOR GRIP	1	1	1	1	B
. 44	N.S.S.	. . . CLEVIS PIN	1	1	1	1	1 B
. 45	N.S.S.	. . . WASHER	1	1	1	1	1 B
. 61	N.S.S.	. . . SHEAR ADAPTER	1	1	1	1	1 B
13	N.S.S.	. . TAPPET WITH BOOT ASSY	2	2	2	2	1
22	N.S.S.	. . BOOT	2	2	2	2	1
26	N.S.S.	. . SPRING SPLINT PIN	1	1	1	1	1
37	N.S.S.	. . PLUG CAP / ADJUSTING DEVICE	1	1	1	1	1
39	N.S.S.	. . SCREW CAP HEXS ZP M16-1.5 GR10.9	1	1	1	1	1
40	N.S.S.	. . SCREW CAP HEXS ZP M16-1.5 GR10.9	1	1	1	1	1
44	N.S.S.	. . CLEVIS PIN	1	1	1	1	1
45	N.S.S.	. . WASHER	1	1	1	1	1
58	N.S.S.	. . RING	2	2	2	2	1
61	N.S.S.	. . SHEAR ADAPTER	1	1	1	1	1
68	N.S.S.	. . CAP	1	1	1	1	1
70	110786	BRAKE WEAR INDICATOR MECHANICAL / 44MM	AR	AR	AR	AR	
80	**Y2-1300-00**	**HUB & ROTOR - FRONT AXLE MODEL "S-84" & "IS84" From Y-7046 To 3-8164**					
80	**Y2-1300-01**	**HUB & ROTOR - FRONT AXLE MODEL "NSD80" From 1-7455 To 1-7455**					
80	**Y2-1300-02**	**HUB & ROTOR - FRONT AXLE MODEL "S84U" & "NDIFS80P" From 4-8165 To 8-9339**					
80	**Y2-1305-00**	**HUB & ROTOR - DRIVE AXLE**					
80	**Y2-1310-00**	**HUB & ROTOR - TAG AXLE TYPE TS6**					
161	N.S.S.	. RING RETAINING	2	2	2	2	1
170	**Y2-1005-00**	**FRONT AXLE - I BEAM RIGID MODEL "S-84" To 3-8164**					
170	**Y2-1005-01**	**FRONT AXLE - I BEAM RIGID MODEL "NSD80" From 1-7455 To 1-7455**					
170	**Y2-1005-02**	**FRONT AXLE - I BEAM RIGID MODEL "S84U" From 4-8165**	1	1	1	1	
170	**Y2-1005-50**	**FRONT AXLE - INDEPENDENT MODEL "IS-84" / 16500LBS To 3-8164**					

From Y-7046 To 8-9339		Date:07/2024	PAGE:Y2-1225-02

BRAKE PARTS "KNORR-BREMSE" SN7 SERIES W/NEW SLIDE PINS

Item#	Part	Description	XLII 45	XLII MTH40	XLII MTH45	XLII MTH45E	NOTES
170	**Y2-1005-51**	**FRONT AXLE - INDEPENDENT MODEL "NDIFS80P" / 18000LBS From 4-8165**					
170	**Y2-1105-00**	**REAR AXLE - MODEL "RC23160"**					
170	**Y2-1615-00**	**TAG AXLE - INSTALL SUSPENSION**					
171	621709	CALIPER MOUNTING BRACKET L.H. & R.H. W/OUT BUSHING	1	1	1	1	D
172	502558	WASHER FL 21.0x37.0x3.0 G500	6	6	6	6	
173	5001529	SCREW CAP HEX M20-1.5x60 G10.9 G500	6	6	6	6	
174	621636	SCREW CAP HEX / TO FIX BRACKET TO AXLE 9/16-18 X 2 GR 8	24	24	24	24	D
175	621365	WASHER (HARD) .59IDX.97ODX.09	24	24	24	24	D
200	642032	KIT, TAPPET W/BOOT	AR	AR	AR	AR	C
201	642141	KIT, GUIDANCE PINS & BELLOW / SN W/ GUIDE SLEEVE BUSHING END	AR	AR	AR	AR	E
202	642034	KIT, PLUG CAP W/AJUSTING DEVICE (PACK of 10x #37, #37a & 61)	AR	AR	AR	AR	S
203	641402	KIT, PAD HOLDER	AR	AR	AR	AR	H
. 26	N.S.S.	. SPRING SPLIT PIN	1	1	1	1	1 H
. 44	N.S.S.	. CLEVIS PIN	1	1	1	1	1 H
. 45	N.S.S.	. WASHER	1	1	1	1	1 H
205	683345	GREASE WHITE / 5GR	AR	AR	AR	AR	K
205	641930	GREASE WHITE / 500GR	AR	AR	AR	AR	K
NS	641321	TOOL / THRUST MEMBER W/BELLOW	AR	AR	AR	AR	L
NS	641322	TOOL / CALIPER INNER BELLOW	AR	AR	AR	AR	M
NS	19400416	TOOL / PUSH-IN INNER BOOT (9)	AR	AR	AR	AR	M
NS	642074	TOOL / BUSHING INSTALLER / SERIES SN	AR	AR	AR	AR	N
NS	641435	TOOL / FORK (FOR BELLOW CAP)	AR	AR	AR	AR	L
305	N.P.N.	TOOL / PRESS IN COVER / K015825	AR	AR	AR	AR	4 X
306	N.P.N.	TOOL / BUSHING - INSTALLER & REMOVER KIT / K005986	AR	AR	AR	AR	4 Y
307	N.P.N.	TOOL / RUBBER BUSHING - INSTALLER / K016743	AR	AR	AR	AR	4 Z
NS	642035	KIT TOOL BOX "KNORR BREMSE" SERIE SN7	AR	AR	AR	AR	
400	**Y2-1235-10**	**BRAKE CHAMBER - DRIVE AXLE "KNORR-BREMSE"**					
401	**Y2-1225-10**	**BRAKE CHAMBER - FRONT AXLE TYPE 22 From Y-7046 To 3-8164**					
401	**Y2-1225-11**	**BRAKE CHAMBER - FRONT AXLE TYPE 24 From Y-7046 To 8-9339**					
401	**Y2-1225-12**	**BRAKE CHAMBER - FRONT AXLE TYPE 27 From 4-8165 To 8-9339**					
402	**Y2-1245-10**	**BRAKE CHAMBER - TAG AXLE TYPE 16/16 From Y-7046 To 3-8164**					
402	**Y2-1245-11**	**BRAKE CHAMBER - TAG AXLE TYPE 14/16 From 4-8165 To 8-9278**					
402	**Y2-1245-12**	**BRAKE CHAMBER - TAG AXLE TYPE 14 & 16 From 8-9279 To 8-9339**					
500	Y006471_000_EN	MAINTENANCE MANUAL / ENGLISH KNORR-BREMSE					
NS	Y006471_000_FF	MANUEL D'ENTRETIEN / FRANÇAIS KNORR-BREMSE					
		B) INCLUDES ITEMS #11, 26, 37, 44, 45 & 61					
		C) INCLUDES 2 OF ITEMS #13, 22 & 161					
		D) ON DRIVE AXLE ONLY					
		E) INCLUDES ITEMS #4, 5, 6, 7, 9, 10, 39, 40, 58 & 68					

From Y-7046 To 8-9339		Date:07/2024	PAGE:Y2-1225-02

BRAKE PARTS "KNORR-BREMSE" SN7 SERIES W/NEW SLIDE PINS

Item#	Part	Description	XLII 45	XLII MTH40	XLII MTH45	XLII MTH45E	NOTES
		H) INCLUDES ITEMS #11,26,44 & 45					
		K) FOR ITEMS #5 & 7					
		L) TO USE W/ITEMS #13					
		M) TO USE W/ITEM #9					
		N) TO USE W/ITEM #7					
		S) INCLUDES 10 ITEMS #37 AND 61					
		X) TO USE WITH ITEM #10					
		Y) TO USE WITH ITEM 6					
		Z) TO USE WITH ITEM #68					
		1) NOT SOLD SEPARATELY					
		4) NO PARTS NUMBER					
		1) NOT SOLD SEPARATELY					

From Y-7046 To 3-8164		Date:07/2024	PAGE:Y2-1225-10
BRAKE CHAMBER - FRONT AXLE TYPE 22			

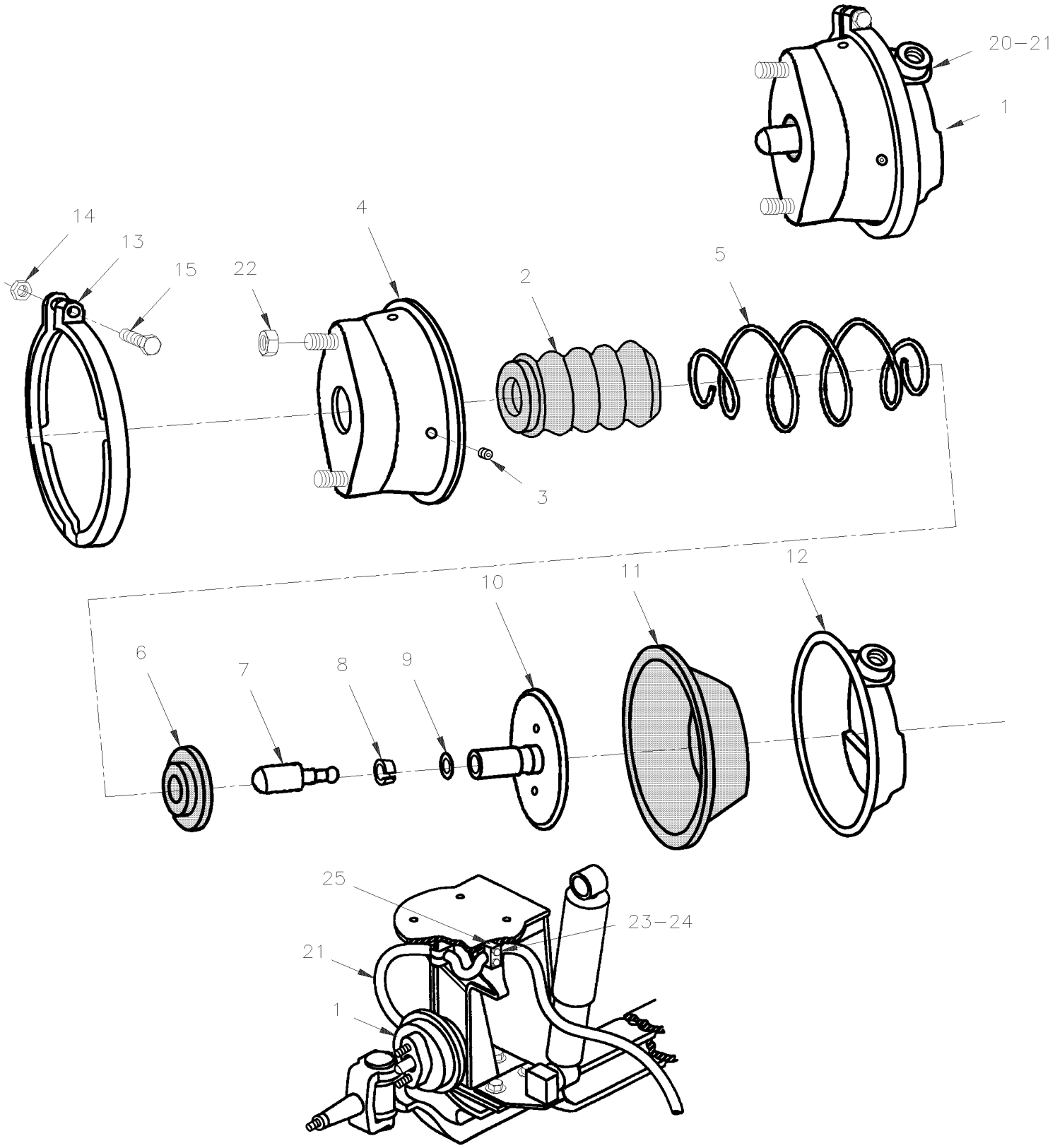

From Y-7046 To 3-8164		Date:07/2024	PAGE:Y2-1225-10

BRAKE CHAMBER - FRONT AXLE TYPE 22

Item#	Part	Description	XLII 45	XLII MTH40	XLII MTH45	XLII MTH45E	NOTES
1	641414	BRAKE CHAMBER ASSY R.H. / TYPE 22	1				
NS	641413	BRAKE CHAMBER ASSY L.H. / TYPE 22	1				
2	N.S.S.	. BOOT	1				1
3	N.S.S.	. HOLE PLUG	1				1
4	N.S.S.	. CHAMBER , NO-PRESSURE	1				1
5	N.S.S.	. SPRING	1				1
6	N.S.S.	. SPRING SEAT	1				1
7	N.S.S.	. PUSH ROD END	1				1
8	N.S.S.	. RETAINER	1				1
9	N.S.S.	. RING	1				1
10	N.S.S.	. PUSH ROD	1				1
11	N.S.S.	. DIAPHRAMG / TYPE 22	1				1
12	N.S.S.	. CHAMBER PRESSURE PLATE	1				1
13	N.S.S.	. CLAMP W/BOLT & NUT	1				1
14	502543	. . NUT HEX M8-1.25 Z050	1				
15	5001021	. . SCREW CAP HEXS M8-1.25x60 G8.8 PT	1				
NS	641423	KIT REPAIR / TYPE 22	1				
20	641294	MALE CONNECTOR / JIC 37° FITTING / #8JIC-MxM16-1.5-M STL	AR				
. NS	641297	. O-RING 13.1MM I.D. X 2.6 TH	1				
. NS	641298	. WASHER FL 17MM I.D x 22MM O.D. x 1.5MM	1				
21	641908	HOSE BRAKE #8 1300MM (51")	2				
22	5001253	NUT HEX STO M16-1.5 G500	1				
23	504612	COLLAR 13/16" I.D. / TO FIX HOSE	2				
24	504614	PLATE RETAINING / COLLAR	2				
25	110738	HOSE SUPPORT L.H. & R.H. / FIXED AT SHOCK END /	2				
		1) NOT SOLD SEPARATELY					

From Y-7046 To 8-9339		Date:07/2024	PAGE:Y2-1225-11
BRAKE CHAMBER - FRONT AXLE TYPE 24			

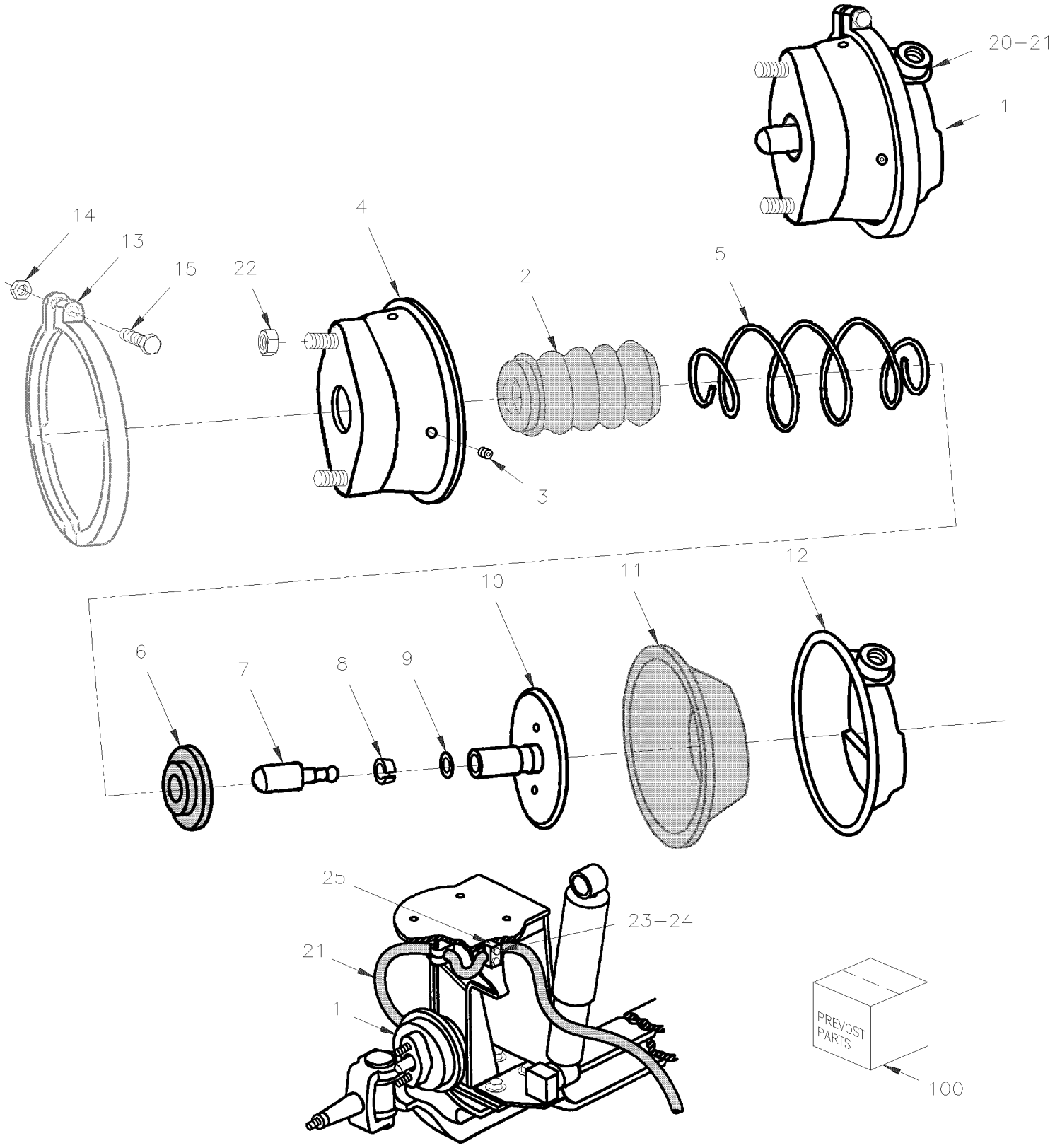

From Y-7046 To 8-9339		Date:07/2024	PAGE:Y2-1225-11

BRAKE CHAMBER - FRONT AXLE TYPE 24

Item#	Part	Description	XLII 45	XLII MTH40	XLII MTH45	XLII MTH45E	NOTES
1	641309	BRAKE CHAMBER ASSY R.H. / TYPE 24 To 3-8164		1	1	1	C
NS	641312	BRAKE CHAMBER ASSY L.H. / TYPE 24 To 3-8164		1	1	1	C
1	641309	BRAKE CHAMBER ASSY R.H. / TYPE 24 From 4-8165 To 8-9278	1				B
1	641312	BRAKE CHAMBER ASSY L.H. / TYPE 24 From 4-8165 To 8-9278	1				B
1	612353	BRAKE CHAMBER ASSY R.H. / TYPE 24 From 8-9279		1	1	1	
1	612354	BRAKE CHAMBER ASSY L.H. / TYPE 24 From 8-9279		1	1	1	
2	N.S.S.	. BOOT	1	1	1	1	1
3	N.S.S.	. HOLE PLUG	1	1	1	1	1
4	N.S.S.	. CHAMBER , NO-PRESSURE	1	1	1	1	1
5	640231	. SPRING, COMP.	1	1	1	1	
6	N.S.S.	. SPRING SEAT	1	1	1	1	1
7	N.S.S.	. PUSH ROD END	1	1	1	1	1
8	N.S.S.	. RETAINER	1	1	1	1	1
9	N.S.S.	. RING	1	1	1	1	1
10	N.S.S.	. PUSH ROD	1	1	1	1	1
11	640229	. DIAPHRAGM / TYPE 24	1	1	1	1	
12	N.S.S.	. CHAMBER PRESSURE PLATE	1	1	1	1	1
13	N.S.S.	. CLAMP W/BOLT & NUT	1	1	1	1	1
14	502543	. . NUT HEX M8-1.25 Z050	1	1	1	1	
15	5001021	. . SCREW CAP HEXS M8-1.25x60 G8.8 PT	1	1	1	1	
20	641294	MALE CONNECTOR / JIC 37° FITTING / #8JIC-MxM16-1.5-M STL To 3-8164	1	1	1	1	
. NS	641297	. O-RING 13.1MM I.D. X 2.6 TH To 3-8164	1	1	1	1	
. NS	641298	. WASHER FL 17MM I.D x 22MM O.D. x 1.5MM To 3-8164	1	1	1	1	
20	660914	MALE ELBOW 90° / JIC 37° FITTING / #8JIC-MxM16-1.5-M STL From 3-8165	1				
. NS	641297	. O-RING 13.1MM I.D. X 2.6 TH From 3-8165	1				
. NS	641298	. WASHER FL 17MM I.D x 22MM O.D. x 1.5MM From 3-8165	1				
21	641908	HOSE BRAKE #8 1300MM (51")	1				B
21	141836	HOSE BRAKE #8 864MM (34") To Y-7220	1	1	1	1	C
21	641905	HOSE BRAKE #8 952MM (37 1/2") From Y-7221 To 3-8164	1	1	1	1	C
22	5001253	NUT HEX STO M16-1.5 G500	2	2	2	2	
23	504612	COLLAR 13/16" I.D. / TO FIX HOSE	2	2	2	2	
24	504614	PLATE RETAINING / COLLAR	2	2	2	2	
25	110765	HOSE SUPPORT L.H. & R.H. / FIXED AT SHOCK END /	2	2	2	2	B
NS	500169	SCREW CAP HEX 1/4-20x1 1/2 G5 PT ZP	4	4	4	4	B
25	141837	HOSE SUPPORT L.H. To 3-8164	1	1	1	1	C
NS	502656	SCREW CAP HEX M6-1.0x50 SS To 3-8164	4	4	4	4	C
25	141845	HOSE SUPPORT R.H. To 3-8164	1	1	1	1	C
NS	502570	WASHER LO SPT 6.1x11.8x1.6 SS To 3-8164	4	4	4	4	C
NS	502565	NUT HEX M6-1.0 SS To 3-8164	4	4	4	4	C
100	641422	KIT REPAIR / TYPE 24	1	1	1	1	A

From Y-7046 To 8-9339		Date:07/2024	PAGE:Y2-1225-11

BRAKE CHAMBER - FRONT AXLE TYPE 24

Item#	Part	Description	XLII 45	XLII MTH40	XLII MTH45	XLII MTH45E	NOTES
		A) INCLUDED ITEMS #2,3,6,8,9 & 11					
		B) WITH I BEAM RIGID SUSPENSION					
		C) WITH INDEPENDANTE SUSPENSION					
		1) NOT SOLD SEPARATELY					

From 4-8165 To 8-9339		Date:07/2024	PAGE:Y2-1225-12
BRAKE CHAMBER - FRONT AXLE TYPE 27			

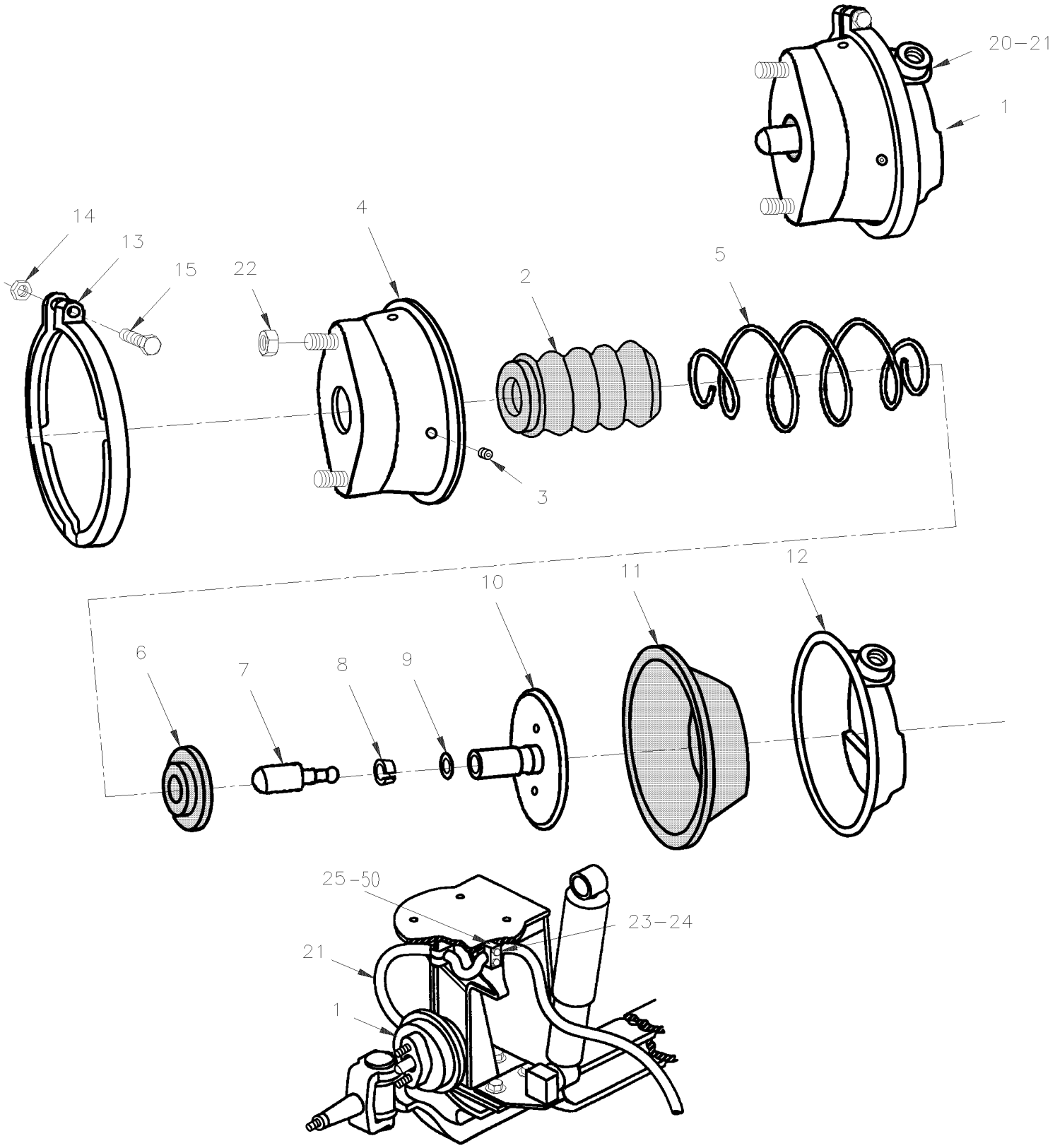

From 4-8165 To 8-9339		Date:07/2024	PAGE:Y2-1225-12

BRAKE CHAMBER - FRONT AXLE TYPE 27

Item#	Part	Description	XLII 45	XLII MTH40	XLII MTH45	XLII MTH45E	NOTES
1	611276	BRAKE CHAMBER ASSY R.H. / TYPE 27		1	1	1	
NS	611277	BRAKE CHAMBER ASSY L.H. / TYPE 27		1	1	1	
2	N.S.S.	. BOOT		1	1	1	1
3	N.S.S.	. HOLE PLUG		1	1	1	1
4	N.S.S.	. CHAMBER , NO-PRESSURE		1	1	1	1
5	N.S.S.	. SPRING		1	1	1	1
6	N.S.S.	. SPRING SEAT		1	1	1	1
7	N.S.S.	. PUSH ROD END		1	1	1	1
8	N.S.S.	. RETAINER		1	1	1	1
9	N.S.S.	. RING		1	1	1	1
10	N.S.S.	. PUSH ROD		1	1	1	1
11	N.S.S.	. DIAPHRAMG / TYPE 27		1	1	1	1
12	N.S.S.	. CHAMBER PRESSURE PLATE		1	1	1	1
13	N.S.S.	. CLAMP W/BOLT & NUT		1	1	1	1
14	502543	. . NUT HEX M8-1.25 Z050		1	1	1	
15	5001021	. . SCREW CAP HEXS M8-1.25x60 G8.8 PT		1	1	1	
15	N.S.S.	KIT REPAIR / TYPE 27		1	1	1	1
20	660914	MALE ELBOW 90° / JIC 37° FITTING / #8JIC-MxM16-1.5-M STL		AR	AR	AR	
. NS	641297	. O-RING 13.1MM I.D. X 2.6 TH		1	1	1	
. NS	641298	. WASHER FL 17MM I.D x 22MM O.D. x 1.5MM		1	1	1	
21	641903	HOSE BRAKE #8 1090MM (43")		2	2	2	
22	5001253	NUT HEX STO M16-1.5 G500		1	1	1	
23	504612	COLLAR 13/16" I.D. / TO FIX HOSE		2	2	2	
24	504614	PLATE RETAINING / COLLAR		2	2	2	
25	142305	HOSE SUPPORT L.H. To 4-8193		1	1	1	
25	142306	HOSE SUPPORT R.H. To 4-8193		1	1	1	
25	142352	HOSE SUPPORT R.H. From 4-8194		1	1	1	
25	142353	HOSE SUPPORT L.H. From 4-8194		1	1	1	
50	**Y2-1250-10**	**ABS BRAKE VALVE INSTALLATION**					
		1) NOT SOLD SEPARATELY					

From Y-7046 To 7-9159		Date:07/2024	PAGE:Y2-1235-00
BRAKE PARTS - DRIVE AXLE "MERITOR" W/DISCS / SB7 SERIES			

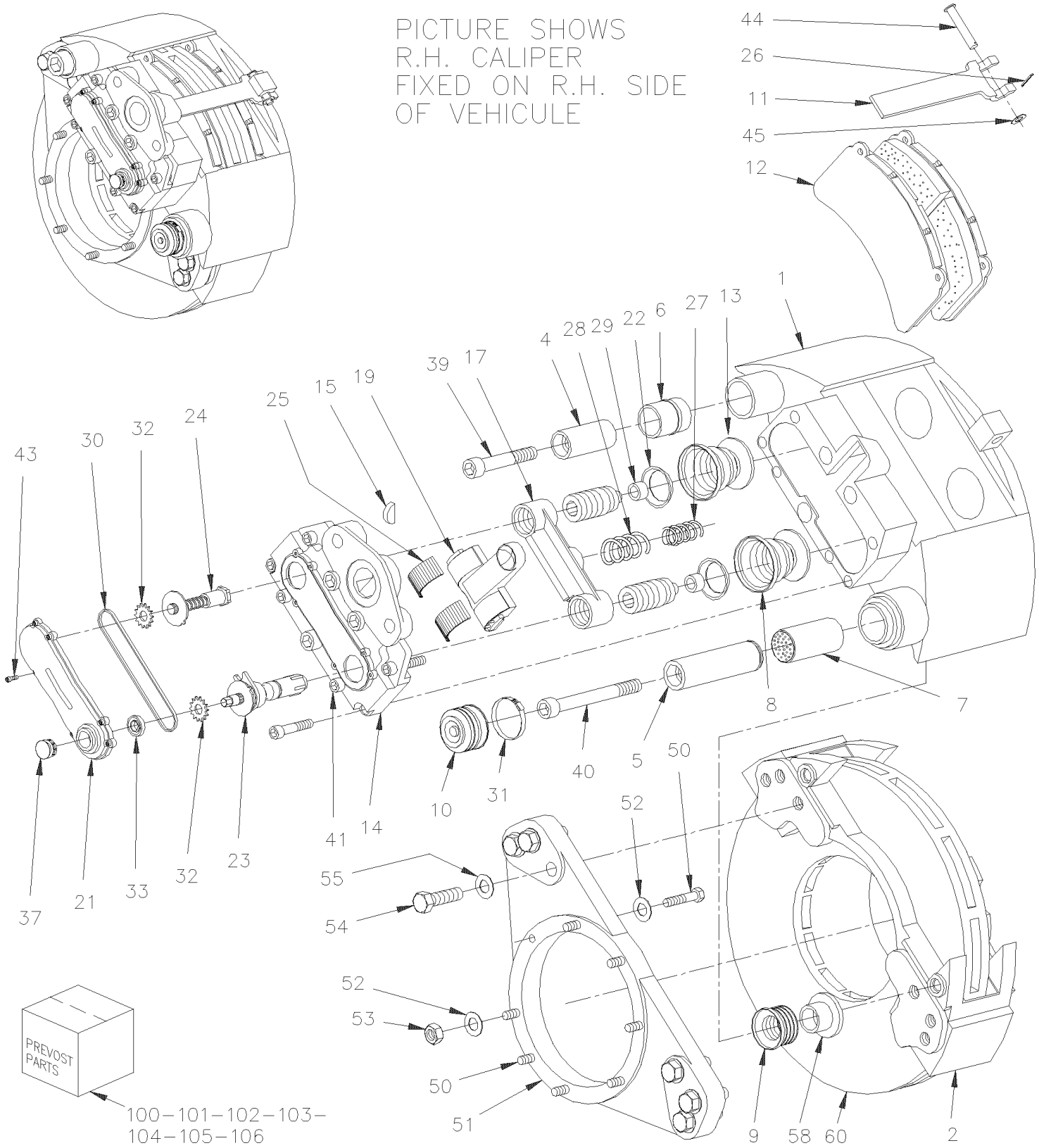

From Y-7046 To 7-9159		Date:07/2024	PAGE:Y2-1235-00

BRAKE PARTS - DRIVE AXLE "MERITOR" W/DISCS / SB7 SERIES

Item#	Part	Description	XLII 45	XLII MTH40	XLII MTH45	XLII MTH45E	NOTES
	621631	CALIPER ASSY R.H. / W/BOOSTER TYPE 24/24 / SB7	1	1	1	1	
	621630	CALIPER ASSY L.H. / W/BOOSTER TYPE 24/24 / SB7	1	1	1	1	
	611184	. CALIPER ASSY R.H. / W/O BOOSTER / SB7	1	1	1	1	A
	611185	. CALIPER ASSY L.H. / W/O BOOSTER / SB7	1	1	1	1	A
1	N.S.S.	. . CALIPER HOUSING	1	1	1	1	1
2	611340	. . BRAKE CARRIER / W/6 HOLES BOLT RETAINERS M20-2.5	1	1	1	1	
4	N.S.S.	. . GUIDE BUSHING / SHORT	1	1	1	1	1
5	N.S.S.	. . GUIDE BUSHING / LONG	1	1	1	1	1
6	611245	. . GUIDE SLEEVE / RUBBER SB 7 SERIES	1	1	1	1	
7	611107	. . BUSHING / BRASS	1	1	1	1	
8	N.S.S.	. . BOOT RUBBER / WHITE	2	2	2	2	1
9	N.S.S.	. . BELLOW GUIDE BUSHING / RED	1	1	1	1	1
10	641421	. . BELLOW CAP / RUBBER	1	1	1	1	
11	N.S.S.	. . BRAKE PAD BRACKET	1	1	1	1	1
12	611105	. . LINING SET STD / (FERODO)	1	1	1	1	B
. 11	N.S.S.	. . . BRAKE PAD BRACKET	1	1	1	1	1 B
. 26	N.S.S.	. . . SPRING SPLIT PIN	1	1	1	1	1 B
. 37	641313	. . . PLUG CAP / ADJUSTING DEVICE / PLASTIC INTERIOR GRIP	1	1	1	1	B
. 44	N.S.S.	. . . CLEVIS PIN	1	1	1	1	1 B
. 45	N.S.S.	. . . WASHER	1	1	1	1	1 B
. 61	N.S.S.	. . . SHEAR ADAPTER	1	1	1	1	1 B
12	611049	. . LINING SET STD /	1	1	1	1	B
. 11	N.S.S.	. . . BRAKE PAD BRACKET	1	1	1	1	1 B
. 26	N.S.S.	. . . SPRING SPLIT PIN	1	1	1	1	1 B
. 37	641313	. . . PLUG CAP / ADJUSTING DEVICE / PLASTIC INTERIOR GRIP	1	1	1	1	B
. 44	N.S.S.	. . . CLEVIS PIN	1	1	1	1	1 B
. 45	N.S.S.	. . . WASHER	1	1	1	1	1 B
. 61	N.S.S.	. . . SHEAR ADAPTER	1	1	1	1	1 B
13	N.S.S.	. . TAPPET	2	2	2	2	1
14	N.S.S.	. . SYNCHRONIZING HOUSING	1	1	1	1	1
15	N.S.S.	. . PLUG HALF / RUBBER	1	1	1	1	1
17	N.S.S.	. . BEAM	1	1	1	1	1
18	N.S.S.	. . O-RING	1	1	1	1	1
19	N.S.S.	. . LEVER	1	1	1	1	1
21	N.S.S.	. . COVER SYNCHRONIZING HOUSING	1	1	1	1	1
22	N.S.S.	. . BOOT	2	2	2	2	1
23	N.S.S.	. . CLEARANCE ADJUSTER	1	1	1	1	1
24	N.S.S.	. . DRIVER	1	1	1	1	1
25	N.S.S.	. . LEVER BEARING	1	1	1	1	1
26	N.S.S.	. . SPRING SPLINT PIN	1	1	1	1	1
27	N.S.S.	. . COMPRESSION SPRING	1	1	1	1	1
28	N.S.S.	. . COMPRESSION SPRING	1	1	1	1	1

From Y-7046 To 7-9159		Date:07/2024	PAGE:Y2-1235-00

BRAKE PARTS - DRIVE AXLE "MERITOR" W/DISCS / SB7 SERIES

Item#	Part	Description	XLII 45	XLII MTH40	XLII MTH45	XLII MTH45E	NOTES
29	N.S.S.	. . RING RETAINING / TAPPET	2	2	2	2	1
30	N.S.S.	. . ROLLER CHAIN	1	1	1	1	1
31	641420	. . PERFORATED CLIP	1	1	1	1	
32	N.S.S.	. . CHAIN DRIVE WHEEL	2	2	2	2	1
33	N.S.S.	. . SHAFT SEALING RING	1	1	1	1	1
37	641313	. . PLUG CAP / ADJUSTING DEVICE / PLASTIC INTERIOR GRIP	1	1	1	1	
38	N.S.S.	. . DOWEL	4	4	4	4	1
39	N.S.S.	. . SCREW CAP HEXS M16-1.5x140 G10.9 ZP	1	1	1	1	1
40	N.S.S.	. . SCREW CAP HEXS M16-1.5x90 G10.9 ZP	1	1	1	1	1
41	N.S.S.	. . SOCKET HEAD CAP SCREW M14 X 60MM GR 12.9	3	3	3	3	1
43	N.S.S.	. . SOCKET HEAD CAP SCREW M5 X 12MM	8	8	8	8	1
44	N.S.S.	. . CLEVIS PIN	1	1	1	1	1
45	N.S.S.	. . WASHER	1	1	1	1	1
NS	**Y2-1235-10**	**. BRAKE CHAMBER - DRIVE AXLE "KNORR-BREMSE"**					
50	621636	SCREW CAP HEX / TO FIX BRACKET TO AXLE 9/16-18 X 2 GR 8	12	12	12	12	
51	621669	CALIPER MOUNTING BRACKET L.H. & R.H.	2	2	2	2	
. NS	621709	. CALIPER MOUNTING BRACKET L.H. & R.H. W/OUT BUSHING	1	1	1	1	
. NS	621684	. BUSHING ABS SENSOR MOUNTING DRIVE AXLE	1	1	1	1	
52	621365	WASHER (HARD) .59IDX.97ODX.09	24	24	24	24	
53	621638	NUT HEX 9/16-18 GR8	12	12	12	12	
54	5001358	SCREW CAP HEX M20-2.5x50 G10.9 ZP	6	6	6	6	
54	611309	SCREW CAP HEX M20-2.5x60 G10.9 DP	6	6	6	6	
55	N8889049	WASHER	6	6	6	6	
58	N.S.S.	PLASTIC RING, BOOT RETAINER	1	1	1	1	1
60	**Y2-1305-00**	**HUB & ROTOR - DRIVE AXLE**					
70	110786	BRAKE WEAR INDICATOR MECHANICAL / 44MM	AR	AR	AR	AR	
99	**FMBS-0BPK-10**	**BRAKE PARTS - "KNORR-BREMSE" / SB7 & SN7 "AFTERMARKET"**					
100	611054	KIT, TAPPET W/BOOT	AR	AR	AR	AR	C
. 08	N.S.S.	. BOOT RUBBER / WHITE	2	2	2	2	1 C
. 13	N.S.S.	. TAPPET	2	2	2	2	1 C
101	611168	KIT, GUIDANCE PINS & BELLOW	AR	AR	AR	AR	D
. 04	N.S.S.	. GUIDE BUSHING / SHORT	1	1	1	1	1 D
. 05	N.S.S.	. GUIDE BUSHING / LONG	1	1	1	1	1 D
. 06	611245	. GUIDE SLEEVE / RUBBER SB 7 SERIES	1	1	1	1	D
. 07	611107	. BUSHING / BRASS	1	1	1	1	D
. 09	N.S.S.	. BELLOW GUIDE BUSHING / RUBBER RED	1	1	1	1	1 D
. 10	641421	. BELLOW CAP / RUBBER	1	1	1	1	D
. 31	641420	. PERFORATED CLIP	1	1	1	1	D
. 39	N.S.S.	. SCREW CAP HEXS	1	1	1	1	1 D
. 40	N.S.S.	. SCREW CAP HEXS	1	1	1	1	1 D
. 58	N.S.S.	. PLASTIC RING / BOOT RETAINER	1	1	1	1	1 D

From Y-7046 To 7-9159		Date:07/2024	PAGE:Y2-1235-00

BRAKE PARTS - DRIVE AXLE "MERITOR" W/DISCS / SB7 SERIES

Item#	Part	Description	XLII 45	XLII MTH40	XLII MTH45	XLII MTH45E	NOTES
102	611177	KIT, BOOT PROTECTOR & TAPPET	AR	AR	AR	AR	E
. 08	N.S.S.	. BOOT RUBBER / WHITE	1	1	1	1	1 E
. 13	N.S.S.	. TAPPET	1	1	1	1	1 E
. 29	N.S.S.	. RING RETAINING / TAPPET	1	1	1	1	1 E
103	611179	KIT, CARRIER & GUIDING PIN	AR	AR	AR	AR	F
. 02	611340	. BRAKE CARRIER / W/6 HOLES BOLT RETAINERS M20-2.5	1	1	1	1	F
. 04	N.S.S.	. GUIDE BUSHING / SHORT	1	1	1	1	1 F
. 05	N.S.S.	. GUIDE BUSHING / LONG	1	1	1	1	1 F
. 39	N.S.S.	. SCREW CAP HEXS	1	1	1	1	1 F
. 40	N.S.S.	. SCREW CAP HEXS	1	1	1	1	1 F
104	641402	KIT, PAD HOLDER	AR	AR	AR	AR	G
. 26	N.S.S.	. SPRING SPLIT PIN	1	1	1	1	1 G
. 44	N.S.S.	. CLEVIS PIN	1	1	1	1	1 G
. 45	N.S.S.	. WASHER	1	1	1	1	1 G
104	641444	TOOL / GROOVING BUSHING	AR	AR	AR	AR	M
105	611199	KIT, BOOT & SEAL	AR	AR	AR	AR	H
. 09	N.S.S.	. BELLOW GUIDE BUSHING / RUBBER RED	1	1	1	1	1 H
. 10	641421	. BELLOW CAP / RUBBER	1	1	1	1	H
. 31	641420	. PERFORATED CLIP	1	1	1	1	H
. 37	641313	. PLUG CAP / ADJUSTING DEVICE / PLASTIC INTERIOR GRIP	1	1	1	1	H
. 58	N.S.S.	. PLASTIC RING / BOOT RETAINER	1	1	1	1	1 H
105	683344	GREASE GREEN / 5GR	AR	AR	AR	AR	I
105	641931	GREASE GREEN / 500GR	AR	AR	AR	AR	I
105	683345	GREASE WHITE / 5GR	AR	AR	AR	AR	J
105	641930	GREASE WHITE / 500GR	AR	AR	AR	AR	J
105	641321	TOOL / THRUST MEMBER W/BELLOW	AR	AR	AR	AR	K
105	641322	TOOL / CALIPER INNER BELLOW	AR	AR	AR	AR	L
105	641323	TOOL / BUSHING INSTALLER / SERIES SB	AR	AR	AR	AR	M
105	641435	TOOL / FORK (FOR BELLOW CAP)	AR	AR	AR	AR	N
106	611246	KIT,GUIDANCE PIN & RUBBER BUSHING / SHORT PIN	AR	AR	AR	AR	O
. 04	N.S.S.	. GUIDE BUSHING / SHORT	1	1	1	1	1 O
. 06	611245	. GUIDE SLEEVE / RUBBER SB 7 SERIES	1	1	1	1	O
. 39	N.S.S.	. SCREW CAP HEXS	1	1	1	1	1 O
107	641427	KIT BOOT & CLIP	AR	AR	AR	AR	P
. 10	641421	. BELLOW CAP / RUBBER	1	1	1	1	P
. 31	641420	. PERFORATED CLIP	1	1	1	1	P
		A) INCLUDES ITEM #2 BUT NOT ITEM # 12					
		B) INCLUDES ITEMS #11, 26, 37, 44, 45 & 61					
		C) INCLUDES 2 OF ITEMS #8 & 13					

From Y-7046 To 7-9159		Date:07/2024	PAGE:Y2-1235-00

BRAKE PARTS - DRIVE AXLE "MERITOR" W/DISCS / SB7 SERIES

Item#	Part	Description	XLII 45	XLII MTH40	XLII MTH45	XLII MTH45E	NOTES
		D) INCLUDES ITEMS #4,5,6,7,9,10,31,39,40 & 58					
		E) INCLUDES ITEMS #8,13 & 29					
		F) INCLUDES ITEMS #2,4,5,39 & 40					
		G) INCLUDES ITEMS #11,26,44 & 45					
		H) INCLUDES ITEMS 39,10,31,37 & 58					
		I) FOR ITEMS #4 & 6					
		J) FOR ITEMS #5 & 7					
		K) TO USE W/ITEMS #8 & 13					
		L) TO USE W/ITEM #9					
		M) TO USE W/ITEM #7					
		N) TO USE W/ITEMS #8 & 13					
		O) INCLUDES ITEMS #4,6 & 39					
		P) INCLUDES ITEM #10 & 31					
		1) NOT SOLD SEPARATELY					
		1) NOT SOLD SEPARATELY					

From Y-7046 To 8-9339		Date:07/2024	PAGE:Y2-1235-10
BRAKE CHAMBER - DRIVE AXLE "KNORR-BREMSE"			

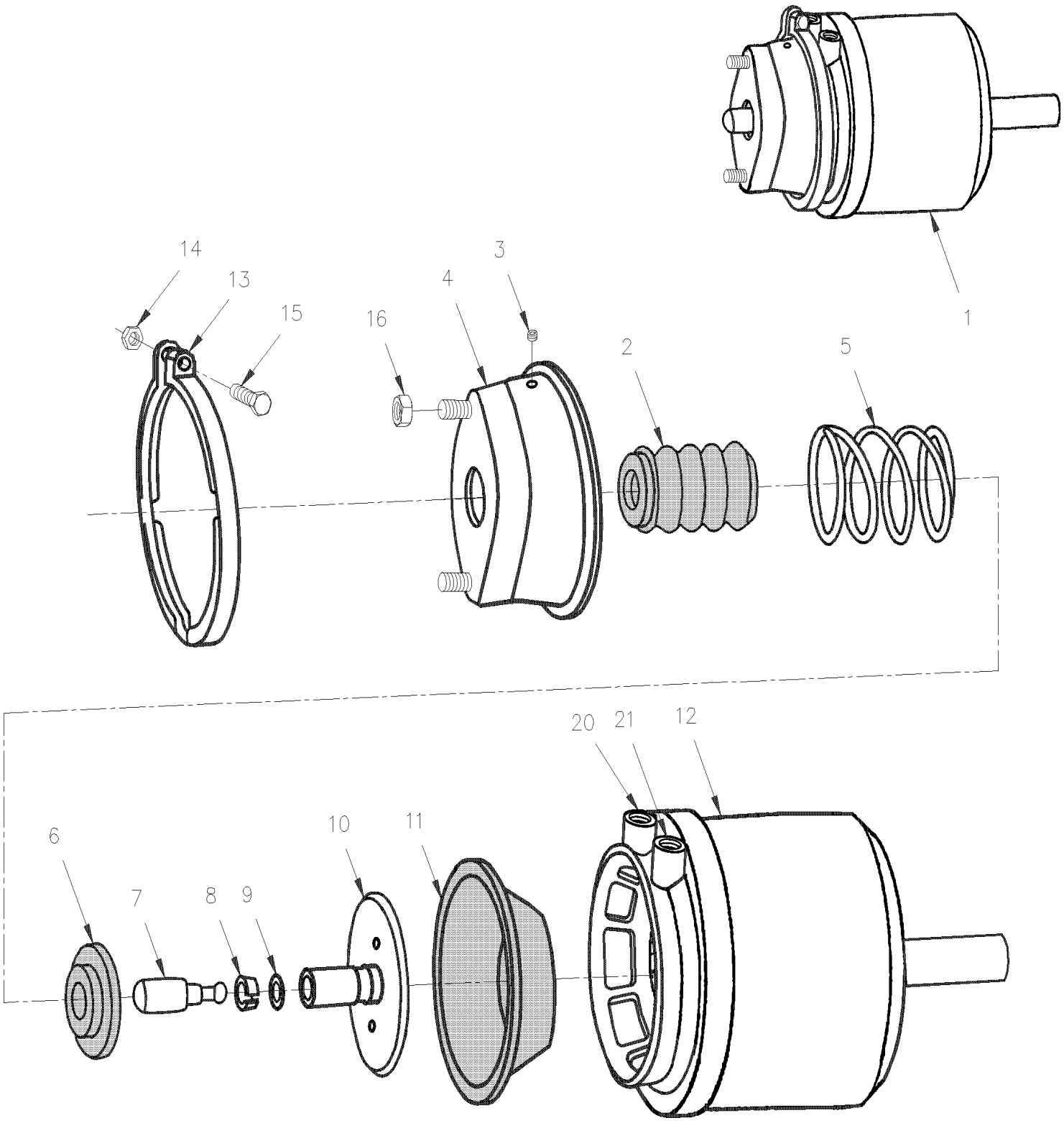

From Y-7046 To 8-9339		Date:07/2024	PAGE:Y2-1235-10

BRAKE CHAMBER - DRIVE AXLE "KNORR-BREMSE"

Item#	Part	Description	XLII 45	XLII MTH40	XLII MTH45	XLII MTH45E	NOTES
1	641432	BRAKE CHAMBER ASSY L.H. & R.H. / TYPE 24/24 To 7-9159	2	2	2	2	
1	642057	BRAKE CHAMBER ASSY L.H. / TYPE 24/24 (SEALED) From 7-9160			1	1	
1	642058	BRAKE CHAMBER ASSY R.H. / TYPE 24/24 (SEALED) From 7-9160			1	1	
2	N.S.S.	. BOOT	1	1	1	1	1
3	N.S.S.	. HOLE PLUG	1	1	1	1	1
4	N.S.S.	. CHAMBER , NO-PRESSURE	1	1	1	1	1
5	N.S.S.	. SPRING	1	1	1	1	1
6	N.S.S.	. SPRING SEAT	1	1	1	1	1
7	N.S.S.	. PUSH ROD END	1	1	1	1	1
8	N.S.S.	. RETAINER	1	1	1	1	1
9	N.S.S.	. RING	1	1	1	1	1
10	N.S.S.	. PUSH ROD	1	1	1	1	1
11	640229	. DIAPHRAGM / TYPE 24 To 7-9159	1	1	1	1	
12	641433	. CHAMBER SUB ASSY / TYPE 24/24 To 7-9159	1	1	1	1	
13	N.S.S.	. CLAMP W/BOLT & NUT To 7-9159	1	1	1	1	1
14	502543	. . NUT HEX M8-1.25 Z050 To 7-9159	1	1	1	1	
15	5001021	. . SCREW CAP HEXS M8-1.25x60 G8.8 PT To 7-9159	1	1	1	1	
16	5001253	NUT HEX STO M16-1.5 G500	2	2	2	2	
NS	641443	KIT REPAIR / TYPE 24/24 To 7-9159	AR	AR	AR	AR	B
		HOSE SERVICE BRAKE					
20	641303	HOSE BRAKE #8 914MM (36")	2	2	2	2	A
20	5011205	FEMALE CONNECTOR / PIPE @ METRIC / 3/8NPT-FxM16-1.5-M ZP	2	2	2	2	
. NS	641297	. O-RING 13.1MM I.D. X 2.6 TH	1	1	1	1	
. NS	641298	. WASHER FL 17MM I.D x 22MM O.D. x 1.5MM	1	1	1	1	
NS	501842	ADAPTER / AIR BRAKE HOSE FITTING / 3/4-20-Mx3/8NPT-M STL	1	1	1	1	
NS	501330	STREET ELBOW 45º / PIPE FITTING / 3/8NPT-Mx3/8NPT-F BR	1	1	1	1	
20	641040	MALE ELBOW 90º / NTA FITTING / #8x3/8NPT-M BR	1	1	1	1	
		HOSE EMERGENCY BRAKE					
21	503488	TUBE, NYLON 1/2 O.D. / BLACK S.L./	AR	AR	AR	AR	
NS	641010	MALE ELBOW 45º / NTA FITTING / #8x3/8NPT-M BR	1	1	1	1	
NS	141804	HOSE BRAKE #8 895MM To Y-7220	1	1	1	1	
21	641901	HOSE BRAKE #8 952MM (37 1/2") From Y-7221	1	1	1	1	
NS	5011205	FEMALE CONNECTOR / PIPE @ METRIC / 3/8NPT-FxM16-1.5-M ZP	2	2	2	2	
. NS	641297	. O-RING 13.1MM I.D. X 2.6 TH	1	1	1	1	
. NS	641298	. WASHER FL 17MM I.D x 22MM O.D. x 1.5MM	1	1	1	1	
NS	641297	O-RING 13.1MM I.D. X 2.6 TH	2	2	2	2	
NS	641298	WASHER FL 17MM I.D x 22MM O.D. x 1.5MM	2	2	2	2	

From Y-7046 To 8-9339		Date:07/2024	PAGE:Y2-1235-10

BRAKE CHAMBER - DRIVE AXLE "KNORR-BREMSE"

Item#	Part	Description	XLII 45	XLII MTH40	XLII MTH45	XLII MTH45E	NOTES
		A) L.H. & R.H.					
		B) INCLUDING ITEM 2,4,6,8,9 & 11					
		1) NOT SOLD SEPARATELY					

From Y-7046 To 7-9159		Date:07/2024	PAGE:Y2-1245-00
BRAKE PARTS - TAG AXLE - W/"KNORR-BREMSE" / SB7 SERIES			

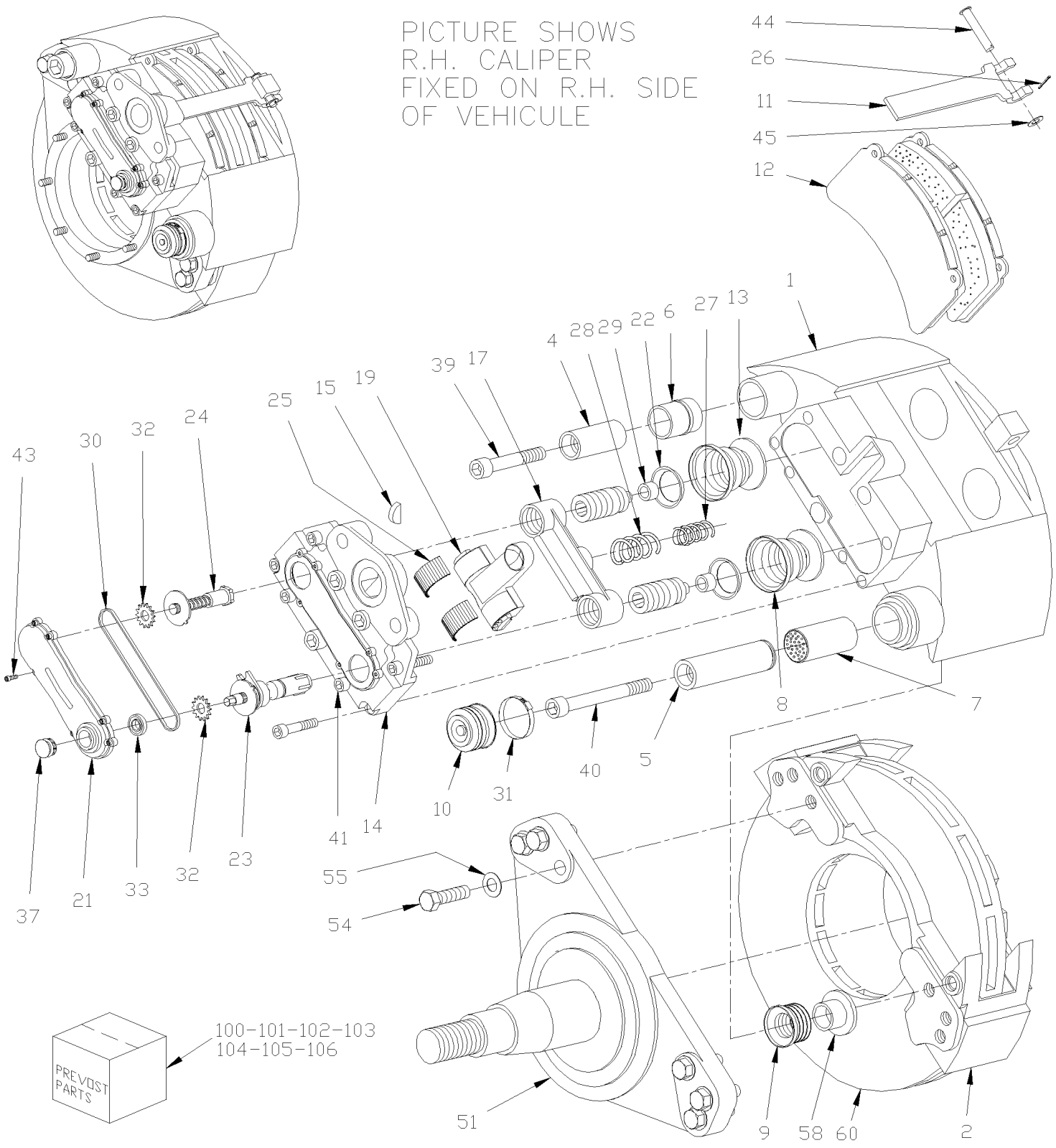

From Y-7046 To 7-9159		Date:07/2024	PAGE:Y2-1245-00

BRAKE PARTS - TAG AXLE - W/"KNORR-BREMSE" / SB7 SERIES

Item#	Part	Description	XLII 45	XLII MTH40	XLII MTH45	XLII MTH45E	NOTES
	N.S.A.	CALIPER ASSY R.H. / W/BOOSTER TYPE 16/16 / (SB7704)	1	1	1	1	3
	N.S.A.	CALIPER ASSY L.H. / W/BOOSTER TYPE 16/16 / (SB7714)	1	1	1	1	3
NS	611184	. CALIPER ASSY R.H. / W/O BOOSTER / SB7	1	1	1	1	A
NS	611185	. CALIPER ASSY L.H. / W/O BOOSTER / SB7	1	1	1	1	A
1	N.S.S.	. . CALIPER HOUSING	1	1	1	1	1
2	611340	. . BRAKE CARRIER / W/6 HOLES BOLT RETAINERS M20-2.5	1	1	1	1	
4	N.S.S.	. . GUIDE BUSHING / SHORT	1	1	1	1	1
5	N.S.S.	. . GUIDE BUSHING / LONG	1	1	1	1	1
6	611245	. . GUIDE SLEEVE / RUBBER SB 7 SERIES	1	1	1	1	
7	611107	. . BUSHING / BRASS	1	1	1	1	
8	N.S.S.	. . BOOT RUBBER / WHITE	2	2	2	2	1
9	N.S.S.	. . BELLOW GUIDE BUSHING / RUBBER RED	1	1	1	1	1
10	641421	. . BELLOW CAP / RUBBER	1	1	1	1	
11	N.S.S.	. . BRAKE PAD BRACKET	1	1	1	1	1
12	611049	. . LINING SET STD /	1	1	1	1	B
. 11	N.S.S.	. . . BRAKE PAD BRACKET	1	1	1	1	1 B
. 26	N.S.S.	. . . SPRING SPLIT PIN	1	1	1	1	1 B
. 37	641313	. . . PLUG CAP / ADJUSTING DEVICE / PLASTIC INTERIOR GRIP	1	1	1	1	B
. 44	N.S.S.	. . . CLEVIS PIN	1	1	1	1	1 B
. 45	N.S.S.	. . . WASHER	1	1	1	1	1 B
. 61	N.S.S.	. . . SHEAR ADAPTER	1	1	1	1	1 B
13	N.S.S.	. . TAPPET	2	2	2	2	1
14	N.S.S.	. . SYNCHRONIZING HOUSING	1	1	1	1	1
15	N.S.S.	. . PLUG HALF / RUBBER	1	1	1	1	1
17	N.S.S.	. . BEAM	1	1	1	1	1
18	N.S.S.	. . O-RING	1	1	1	1	1
19	N.S.S.	. . LEVER	1	1	1	1	1
21	N.S.S.	. . COVER SYNCHRONIZING HOUSING	1	1	1	1	1
22	N.S.S.	. . BOOT	2	2	2	2	1
23	N.S.S.	. . CLEARANCE ADJUSTER	1	1	1	1	1
24	N.S.S.	. . DRIVER	1	1	1	1	1
25	N.S.S.	. . LEVER BEARING	2	2	2	2	1
26	N.S.S.	. . SPRING SPLINT PIN	1	1	1	1	1
27	N.S.S.	. . COMPRESSION SPRING	1	1	1	1	1
28	N.S.S.	. . COMPRESSION SPRING	1	1	1	1	1
29	N.S.S.	. . RING RETAINING / TAPPET	2	2	2	2	1
30	N.S.S.	. . ROLLER CHAIN	1	1	1	1	1
31	641420	. . PERFORATED CLIP	1	1	1	1	
32	N.S.S.	. . CHAIN DRIVE WHEEL	2	2	2	2	1
33	N.S.S.	. . SHAFT SEALING RING	1	1	1	1	1
37	641313	. . PLUG CAP / ADJUSTING DEVICE / PLASTIC INTERIOR GRIP	1	1	1	1	
38	N.S.S.	. . DOWEL	4	4	4	4	1

From Y-7046 To 7-9159		Date:07/2024	PAGE:Y2-1245-00

BRAKE PARTS - TAG AXLE - W/"KNORR-BREMSE" / SB7 SERIES

Item#	Part	Description	XLII 45	XLII MTH40	XLII MTH45	XLII MTH45E	NOTES
39	N.S.S.	. . SCREW CAP HEXS M16-1.5x140 G10.9 ZP	1	1	1	1	1
40	N.S.S.	. . SCREW CAP HEXS M16-1.5x90 G10.9 ZP	1	1	1	1	1
41	N.S.S.	. . SOCKET HEAD CAP SCREW M14 X 60MM GR 12.9	3	3	3	3	1
43	N.S.S.	. . SOCKET HEAD CAP SCREW M5 X 12MM	8	8	8	8	1
44	N.S.S.	. . CLEVIS PIN	1	1	1	1	1
45	N.S.S.	. . WASHER	1	1	1	1	1
51	611216	SPINDLE / WITH MODEL "G.K.N." (TS6) To 3-8164	2	2	2	2	
51	611302	SPINDLE / WITH MODEL "G.K.N." (TS8U UNITISED) From 4-8165	2	2	2	2	
NS	611048	STUD / M16-2.0 x 60MM	8	8	8	8	
54	5001193	SCREW CAP HEX M20-2.5x65 G10.9 ZP	6	6	6	6	
55	502558	WASHER FL 21.0x37.0x3.0 G500	6	6	6	6	
58	N.S.S.	PLASTIC RING, BOOT RETAINER	1	1	1	1	1
60	**Y2-1310-00**	**HUB & ROTOR - TAG AXLE TYPE TS6 To 3-8164**					
60	**Y2-1310-01**	**HUB & ROTOR - TAG AXLE TYPE TS8U From 4-8165**					
70	110786	BRAKE WEAR INDICATOR MECHANICAL / 44MM	AR	AR	AR	AR	
99	**FMBS-0BPK-10**	**BRAKE PARTS - "KNORR-BREMSE" / SB7 & SN7 "AFTERMARKET"**					
100	611054	KIT, TAPPET W/BOOT	AR	AR	AR	AR	C
. 08	N.S.S.	. BOOT RUBBER / WHITE	2	2	2	2	1 C
. 13	N.S.S.	. TAPPET	2	2	2	2	1 C
101	611168	KIT, GUIDANCE PINS & BELLOW	AR	AR	AR	AR	D
. 04	N.S.S.	. GUIDE BUSHING / SHORT	1	1	1	1	1 D
. 05	N.S.S.	. GUIDE BUSHING / LONG	1	1	1	1	1 D
. 06	611245	. GUIDE SLEEVE / RUBBER SB 7 SERIES	1	1	1	1	D
. 07	611107	. BUSHING / BRASS	1	1	1	1	D
. 09	N.S.S.	. BELLOW GUIDE BUSHING / RUBBER RED	1	1	1	1	1 D
. 10	641421	. BELLOW CAP / RUBBER	1	1	1	1	D
. 31	641420	. PERFORATED CLIP	1	1	1	1	D
. 39	N.S.S.	. SCREW CAP HEXS	1	1	1	1	1 D
. 40	N.S.S.	. SCREW CAP HEXS	1	1	1	1	1 D
. 58	N.S.S.	. PLASTIC RING / BOOT RETAINER	1	1	1	1	1 D
102	611177	KIT, BOOT PROTECTOR & TAPPET	AR	AR	AR	AR	E
. 08	N.S.S.	. BOOT RUBBER / WHITE	1	1	1	1	1 E
. 13	N.S.S.	. TAPPET	1	1	1	1	1 E
. 29	N.S.S.	. RING RETAINING / TAPPET	1	1	1	1	1 E
103	611179	KIT, CARRIER & GUIDING PIN	AR	AR	AR	AR	F
. 02	611340	. BRAKE CARRIER / W/6 HOLES BOLT RETAINERS M20-2.5	1	1	1	1	F
. 04	N.S.S.	. GUIDE BUSHING / SHORT	1	1	1	1	1 F
. 05	N.S.S.	. GUIDE BUSHING / LONG	1	1	1	1	1 F
. 39	N.S.S.	. SCREW CAP HEXS	1	1	1	1	1 F
. 40	N.S.S.	. SCREW CAP HEXS	1	1	1	1	1 F
104	641402	KIT, PAD HOLDER	AR	AR	AR	AR	G

From Y-7046 To 7-9159		Date:07/2024	PAGE:Y2-1245-00

BRAKE PARTS - TAG AXLE - W/"KNORR-BREMSE" / SB7 SERIES

Item#	Part	Description	XLII 45	XLII MTH40	XLII MTH45	XLII MTH45E	NOTES
. 26	N.S.S.	. SPRING SPLIT PIN	1	1	1	1	1 G
. 44	N.S.S.	. CLEVIS PIN	1	1	1	1	1 G
. 45	N.S.S.	. WASHER	1	1	1	1	1 G
105	611199	KIT, BOOT & SEAL	AR	AR	AR	AR	H
. 09	N.S.S.	. BELLOW GUIDE BUSHING / RUBBER RED	1	1	1	1	1 H
. 10	641421	. BELLOW CAP / RUBBER	1	1	1	1	H
. 31	641420	. PERFORATED CLIP	1	1	1	1	H
. 37	641313	. PLUG CAP / ADJUSTING DEVICE / PLASTIC INTERIOR GRIP	1	1	1	1	H
. 58	N.S.S.	. PLASTIC RING / BOOT RETAINER	1	1	1	1	1 H
105	683344	GREASE GREEN / 5GR	AR	AR	AR	AR	I
105	641931	GREASE GREEN / 500GR	AR	AR	AR	AR	I
105	683345	GREASE WHITE / 5GR	AR	AR	AR	AR	J
105	641930	GREASE WHITE / 500GR	AR	AR	AR	AR	J
105	641321	TOOL / THRUST MEMBER W/BELLOW	AR	AR	AR	AR	K
105	641322	TOOL / CALIPER INNER BELLOW	AR	AR	AR	AR	L
105	641323	TOOL / BUSHING INSTALLER / SERIES SB	AR	AR	AR	AR	N
105	641435	TOOL / FORK (FOR BELLOW CAP)	AR	AR	AR	AR	O
105	641444	TOOL / GROOVING BUSHING	AR	AR	AR	AR	N
106	611246	KIT,GUIDANCE PIN & RUBBER BUSHING / SHORT PIN	AR	AR	AR	AR	P
. 04	N.S.S.	. GUIDE BUSHING / SHORT	1	1	1	1	1 P
. 06	611245	. GUIDE SLEEVE / RUBBER SB 7 SERIES	1	1	1	1	P
. 39	N.S.S.	. SCREW CAP HEXS	1	1	1	1	1 P
107	641427	KIT BOOT & CLIP	AR	AR	AR	AR	Q
. 10	641421	. BELLOW CAP / RUBBER	1	1	1	1	Q
. 31	641420	. PERFORATED CLIP	1	1	1	1	Q
		A) INCLUDES ITEM #2 BUT NOT ITEM # 12					
		B) INCLUDES ITEMS #11, 26, 37, 44, 45 & 61					
		C) INCLUDES 2 OF ITEMS #8 & 13					
		D) INCLUDE ITEMS #4,5,6,7,9,10,31,39,40 & 58					
		E) INCLUDE ITEMS #8, 13 & 29					
		F) INCLUDE ITEMS #2,4,5,39,40 & 58					
		G) INCLUDE ITEMS #11,26,44 & 45					
		H) INCLUDE ITEMS #9,10,31,37 & 58					
		I) FOR ITEMS #4 & 6					
		J) FOR ITEMS #5 & 7					
		K) TO USE W/ITEMS #8 & 13					
		L) TO USE W/ITEMS #9					
		N) TO USE W/ITEM #7					
		O) TO USE WITH ITEMS #8 & 13					

From Y-7046 To 7-9159		Date:07/2024	PAGE:Y2-1245-00

BRAKE PARTS - TAG AXLE - W/"KNORR-BREMSE" / SB7 SERIES

Item#	Part	Description	XLII 45	XLII MTH40	XLII MTH45	XLII MTH45E	NOTES
		P) INCLUDE ITEMS #4,6 & 39					
		Q) INCLUDE ITEM #10 & 31					
		1) NOT SOLD SEPARATELY					
		3) NOT SOLD ASSEMBLY					
		1) NOT SOLD SEPARATELY					

From Y-7046 To 7-9159		Date:07/2024	PAGE:Y2-1310-01
HUB & ROTOR - TAG AXLE TYPE TS8U			

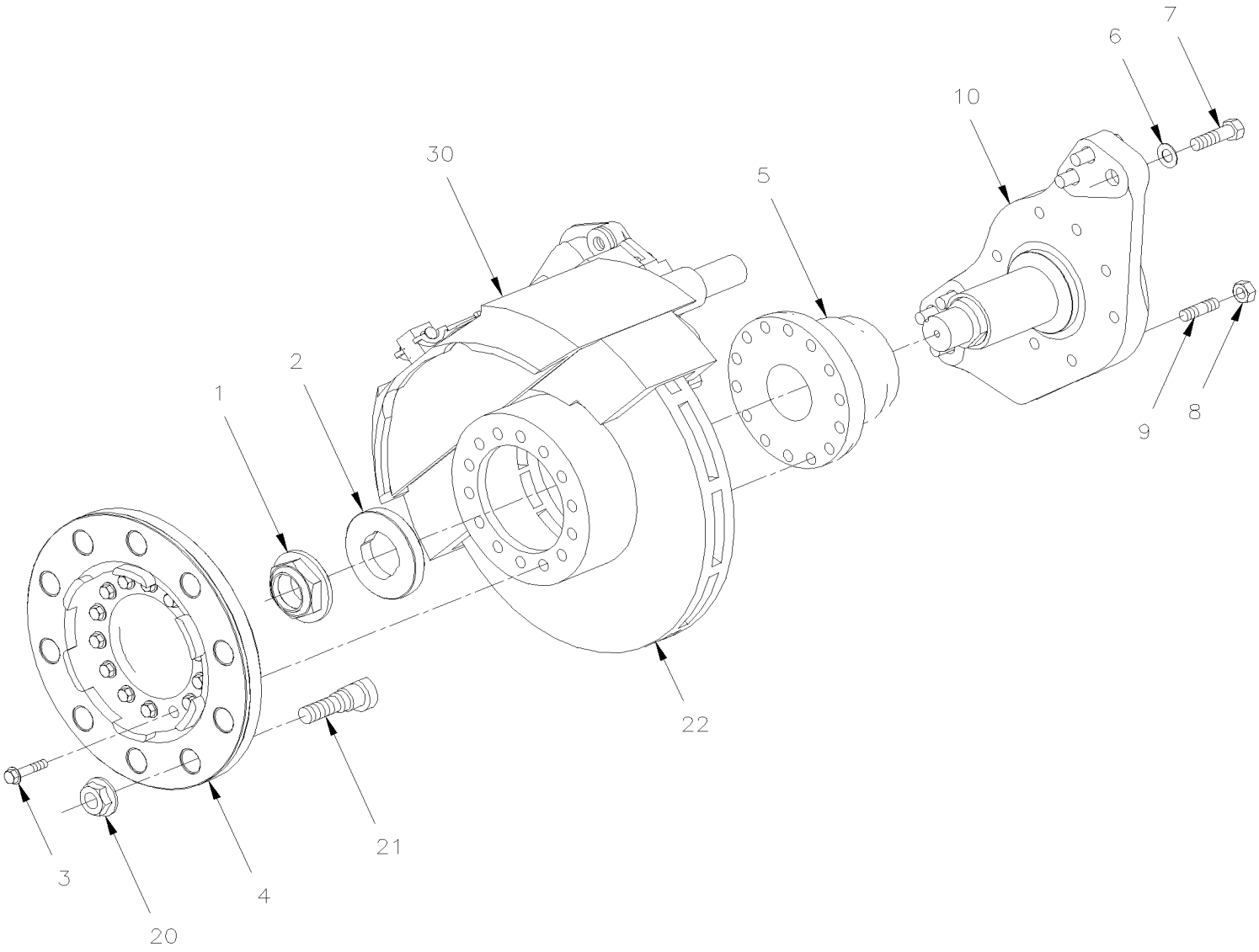

From Y-7046 To 7-9159		Date:07/2024	PAGE:Y2-1310-01

HUB & ROTOR - TAG AXLE TYPE TS8U

Item#	Part	Description	XLII 45	XLII MTH40	XLII MTH45	XLII MTH45E	NOTES
1	611949	HUB NUT 1 3/4-8	1	1	1	1	
2	611948	THRUST WASHER	1	1	1	1	
3	611955	SCREW CAP HEXF M14-1.5x78 G12.9 N500	14	14	14	14	S
4	611301	HUB FLANGE	1	1	1	1	
5	611953	HUB ASSY / UNITISED L.H. & R.H. "TIMKEN"	1	1	1	1	S
5	611471	HUB ASSY / UNITISED L.H. & R.H. "FAG" ASSY W/"ABS" RING SERVICE	1	1	1	1	S
. NS	N.S.S.	. TOOTH WHEEL	1	1	1	1	1 S
. NS	509939	. SCREW DRV RND #4x1/4 SS	3	3	3	3	S
NS	491115	TOOL, HUB INSTALLER W/UNITISED BEARING / 70MM	1	1	1	1	
. NS	NDS8	. MAINTENANCE INSTRUCTION	1	1	1	1	
6	611044	WASHER FL HARD 21.0x37.0x3.0 N500	1	1	1	1	
7	5001193	SCREW CAP HEX M20-2.5x65 G10.9 ZP To 7-9159	6	6	6	6	
8	502588	NUT HEX M16-2.0 ZP	8	8	8	8	
NS	502584	WASHER LO SERR 8.2x26.3x1.8 Z050	8	8	8	8	
9	611048	STUD / M16-2.0 x 60MM	8	8	8	8	
10	611302	SPINDLE / WITH MODEL "G.K.N." (TS8U UNITISED)	1	1	1	1	
20	20434082	NUT R.H. / W/HUB-MOUNT WHEEL M22-1.5 / 27 MM TH	10	10	10	10	
21	611207	STUD / R.H. / W/HUB-MOUNT WHEEL M22-1.5 x 81MM	10	10	10	10	
22	611300	ROTOR VENTED	10	10	10	10	
30	**Y2-1245-00**	**BRAKE PARTS - TAG AXLE - W/"KNORR-BREMSE" / SB7 SERIES To 7-9159**					
30	**Y2-1225-01**	**BRAKE PARTS "KNORR-BREMSE" SN7 SERIES From 7-9160**					
30	**Y2-1225-02**	**BRAKE PARTS "KNORR-BREMSE" SN7 SERIES W/NEW SLIDE PINS**					
NS	MI08-04	SEE MAINTENANCE INFORMATION	1	1	1	1	
		S) REPLACED ALL BOLTS EACH TIME WHEN YOU DISASSEMBLED OR UNSCREWED THE HUB					
		1) NOT SOLD SEPARATELY					

From Y-7046 To 3-8164		Date:07/2024	PAGE:Y2-1245-10
BRAKE CHAMBER - TAG AXLE TYPE 16/16			

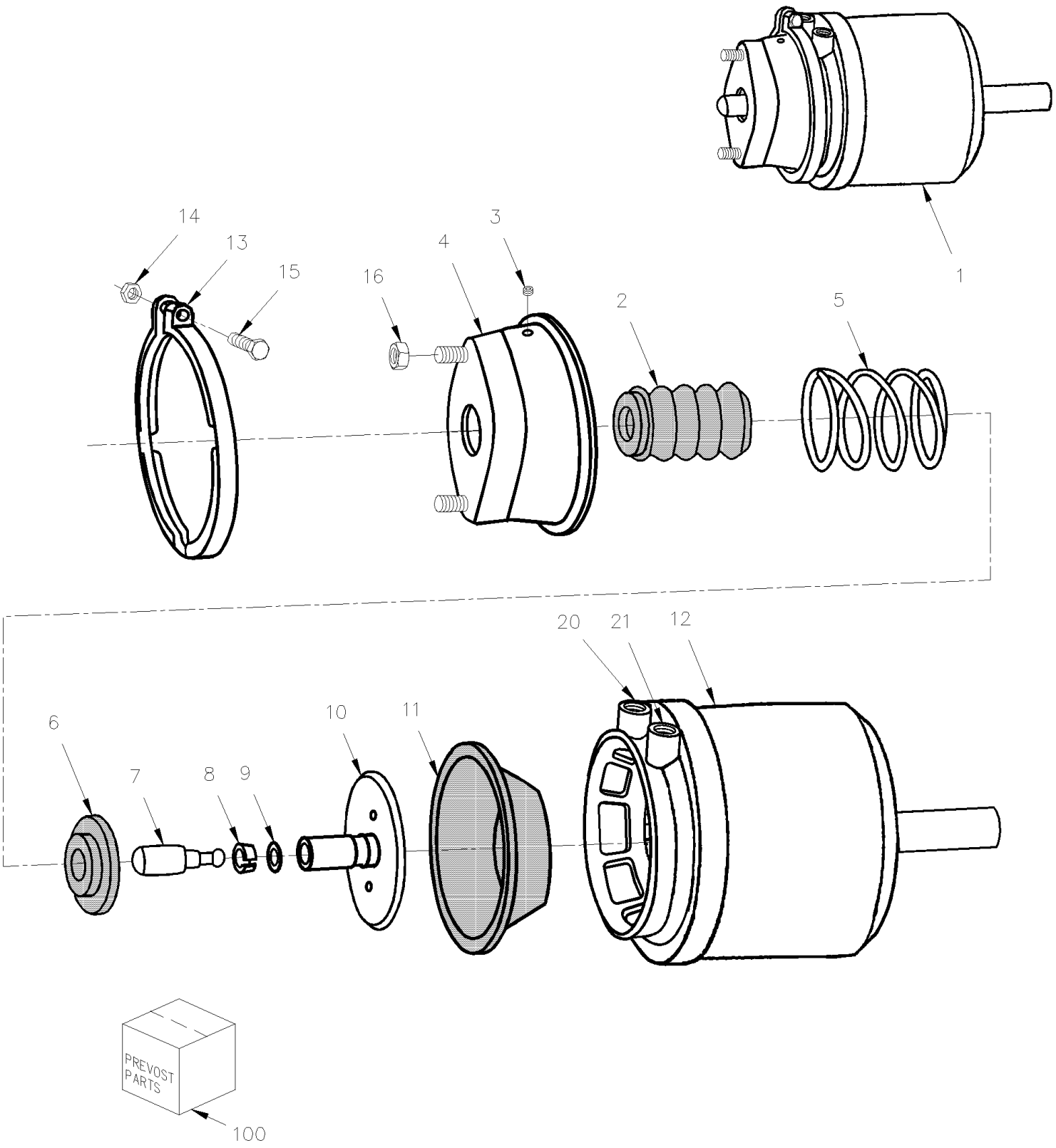

From Y-7046 To 3-8164		Date:07/2024	PAGE:Y2-1245-10

BRAKE CHAMBER - TAG AXLE TYPE 16/16

Item#	Part	Description	XLII 45	XLII MTH40	XLII MTH45	XLII MTH45E	NOTES
1	641308	BRAKE CHAMBER ASSY L.H. & R.H / TYPE 16/16	2	2	2	2	
2	N.S.S.	. BOOT	1	1	1	1	1
3	N.S.S.	. HOLE PLUG	1	1	1	1	1
4	N.S.S.	. CHAMBER , NO-PRESSURE	1	1	1	1	1
5	N.S.S.	. SPRING	1	1	1	1	1
6	N.S.S.	. SPRING SEAT	1	1	1	1	1
7	N.S.S.	. PUSH ROD END	1	1	1	1	1
8	N.S.S.	. RETAINER	1	1	1	1	1
9	N.S.S.	. RING	1	1	1	1	1
10	N.S.S.	. PUSH ROD	1	1	1	1	1
11	641046	. DIAPHRAGM / TYPE 16	1	1	1	1	
12	641431	. CHAMBER SUB ASSY / TYPE 16/16	1	1	1	1	
13	N.S.S.	. CLAMP W/BOLT & NUT	1	1	1	1	1
14	502543	. NUT HEX M8-1.25 Z050	1	1	1	1	
15	5001021	. SCREW CAP HEXS M8-1.25x60 G8.8 PT	1	1	1	1	
16	5001253	NUT HEX STO M16-1.5 G500	2	2	2	2	
		HOSE SERVICE BRAKE					
20	141812	HOSE BRAKE #8 1012MM (40") To Y-7220	1	1	1	1	A
20	641903	HOSE BRAKE #8 1090MM (43") From Y-7221	1	1	1	1	
NS	501291	MALE ELBOW 45° / JIC 37° FITTING / #8JIC-Mx3/8NPT-M STL	1	1	1	1	A
		HOSE EMERGENCY BRAKE					
21	503488	TUBE, NYLON 1/2 O.D. / BLACK S.L./	AR	AR	AR	AR	
NS	641381	MALE CONNECTOR / PUSH-IN FITTING / #8x3/8NPT-M BR	1	1	1	1	
NS	141804	HOSE BRAKE #8 895MM To Y-7220	1	1	1	1	
21	641901	HOSE BRAKE #8 952MM (37 1/2") From Y-7221	1	1	1	1	
NS	5011205	FEMALE CONNECTOR / PIPE @ METRIC / 3/8NPT-FxM16-1.5-M ZP	2	2	2	2	
. NS	641297	. O-RING 13.1MM I.D. X 2.6 TH	1	1	1	1	
. NS	641298	. WASHER FL 17MM I.D x 22MM O.D. x 1.5MM	1	1	1	1	
NS	641297	O-RING 13.1MM I.D. X 2.6 TH	2	2	2	2	B
NS	641298	WASHER FL 17MM I.D x 22MM O.D. x 1.5MM	2	2	2	2	B
100	641430	KIT REPAIR	1	1	1	1	C
		A) SERVICE					
		B) SERVICE & EMERGENCY					
		C) INCLUDING ITEMS #2,3,6,8,9 & 11					

From Y-7046 To 3-8164		Date:07/2024	PAGE:Y2-1245-10

BRAKE CHAMBER - TAG AXLE TYPE 16/16

Item#	Part	Description	XLII 45	XLII MTH40	XLII MTH45	XLII MTH45E	NOTES
		1) NOT SOLD SEPARATELY					

From 4-8165 To 8-9278		Date:07/2024	PAGE:Y2-1245-11
BRAKE CHAMBER - TAG AXLE TYPE 14/16			

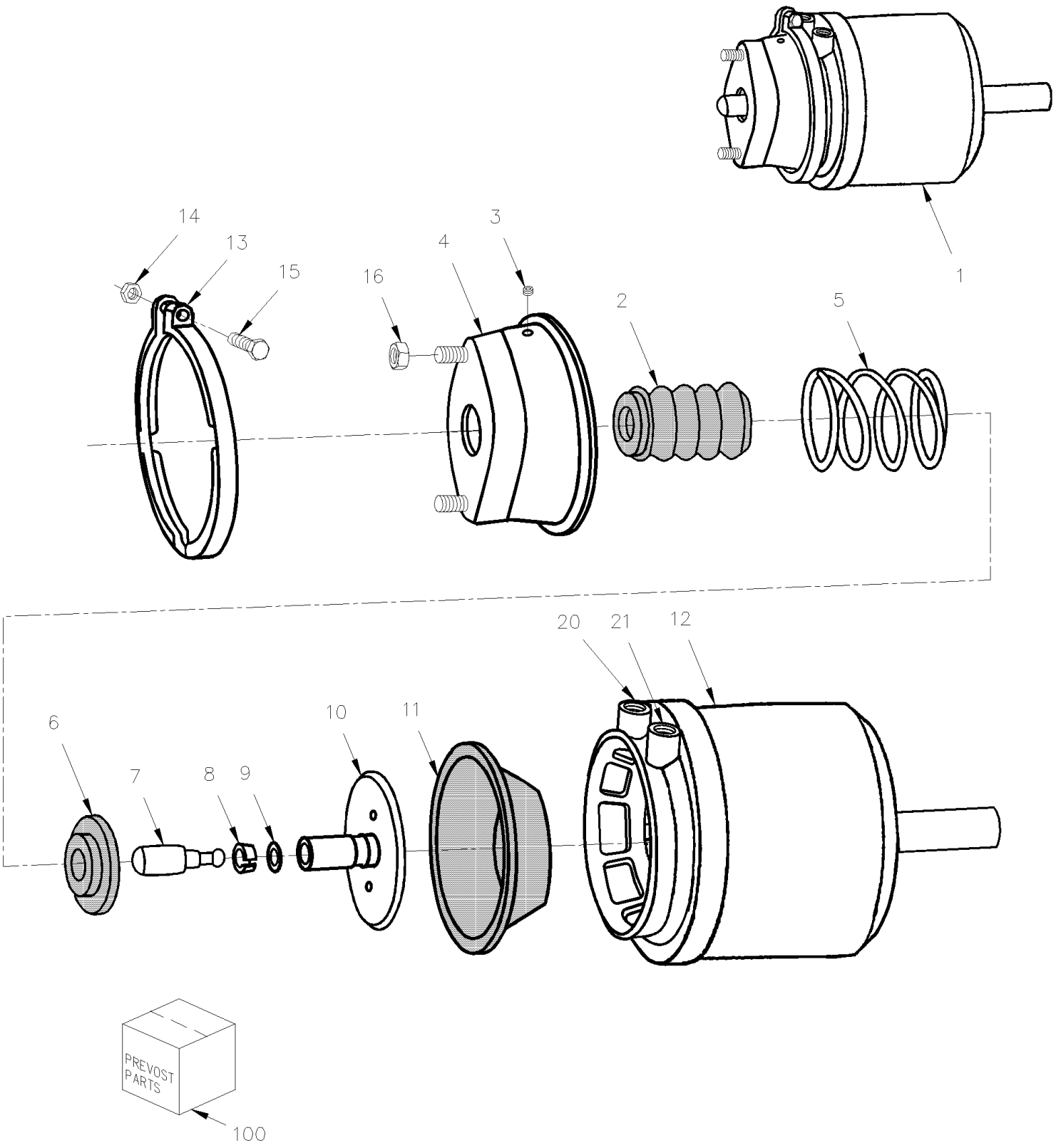

From 4-8165 To 8-9278		Date:07/2024	PAGE:Y2-1245-11

BRAKE CHAMBER - TAG AXLE TYPE 14/16

Item#	Part	Description	XLII 45	XLII MTH40	XLII MTH45	XLII MTH45E	NOTES
1	641980	BRAKE CHAMBER ASSY L.H. & R.H / TYPE 14/16	2	2	2	2	
2	N.S.S.	. BOOT	1	1	1	1	1
3	N.S.S.	. HOLE PLUG	1	1	1	1	1
4	N.S.S.	. CHAMBER , NO-PRESSURE	1	1	1	1	1
5	N.S.S.	. SPRING	1	1	1	1	1
6	N.S.S.	. SPRING SEAT	1	1	1	1	1
7	N.S.S.	. PUSH ROD END	1	1	1	1	1
8	N.S.S.	. RETAINER	1	1	1	1	1
9	N.S.S.	. RING	1	1	1	1	1
10	N.S.S.	. PUSH ROD	1	1	1	1	1
11	N.P.N.	. DIAPHRAGM / TYPE 14	1	1	1	1	4
12	N.P.N.	. CHAMBER SUB ASSY / TYPE 14/16	1	1	1	1	4
13	N.S.S.	. CLAMP W/BOLT & NUT	1	1	1	1	1
14	502543	. NUT HEX M8-1.25 Z050	1	1	1	1	
15	5001021	. SCREW CAP HEXS M8-1.25x60 G8.8 PT	1	1	1	1	
16	5001253	NUT HEX STO M16-1.5 G500	2	2	2	2	
		HOSE SERVICE BRAKE					
20	641903	HOSE BRAKE #8 1090MM (43")	1	1	1	1	
NS	501291	MALE ELBOW 45º / JIC 37° FITTING / #8JIC-Mx3/8NPT-M STL	1	1	1	1	A
		HOSE EMERGENCY BRAKE					
21	503488	TUBE, NYLON 1/2 O.D. / BLACK S.L./	AR	AR	AR	AR	
NS	641381	MALE CONNECTOR / PUSH-IN FITTING / #8x3/8NPT-M BR	1	1	1	1	
21	641901	HOSE BRAKE #8 952MM (37 1/2")	1	1	1	1	
NS	5011205	FEMALE CONNECTOR / PIPE @ METRIC / 3/8NPT-FxM16-1.5-M ZP	2	2	2	2	
. NS	641297	. O-RING 13.1MM I.D. X 2.6 TH	1	1	1	1	
. NS	641298	. WASHER FL 17MM I.D x 22MM O.D. x 1.5MM	1	1	1	1	
NS	641297	O-RING 13.1MM I.D. X 2.6 TH	2	2	2	2	B
NS	641298	WASHER FL 17MM I.D x 22MM O.D. x 1.5MM	2	2	2	2	B
		A) SERVICE					
		B) SERVICE & EMERGENCY					
		1) NOT SOLD SEPARATELY					
		4) NO PARTS NUMBER					

From 8-9279 To 8-9339		Date:07/2024	PAGE:Y2-1245-12
BRAKE CHAMBER - TAG AXLE TYPE 14 & 16			

SEALED TYPE NO SERVICING PART AVALIABLE

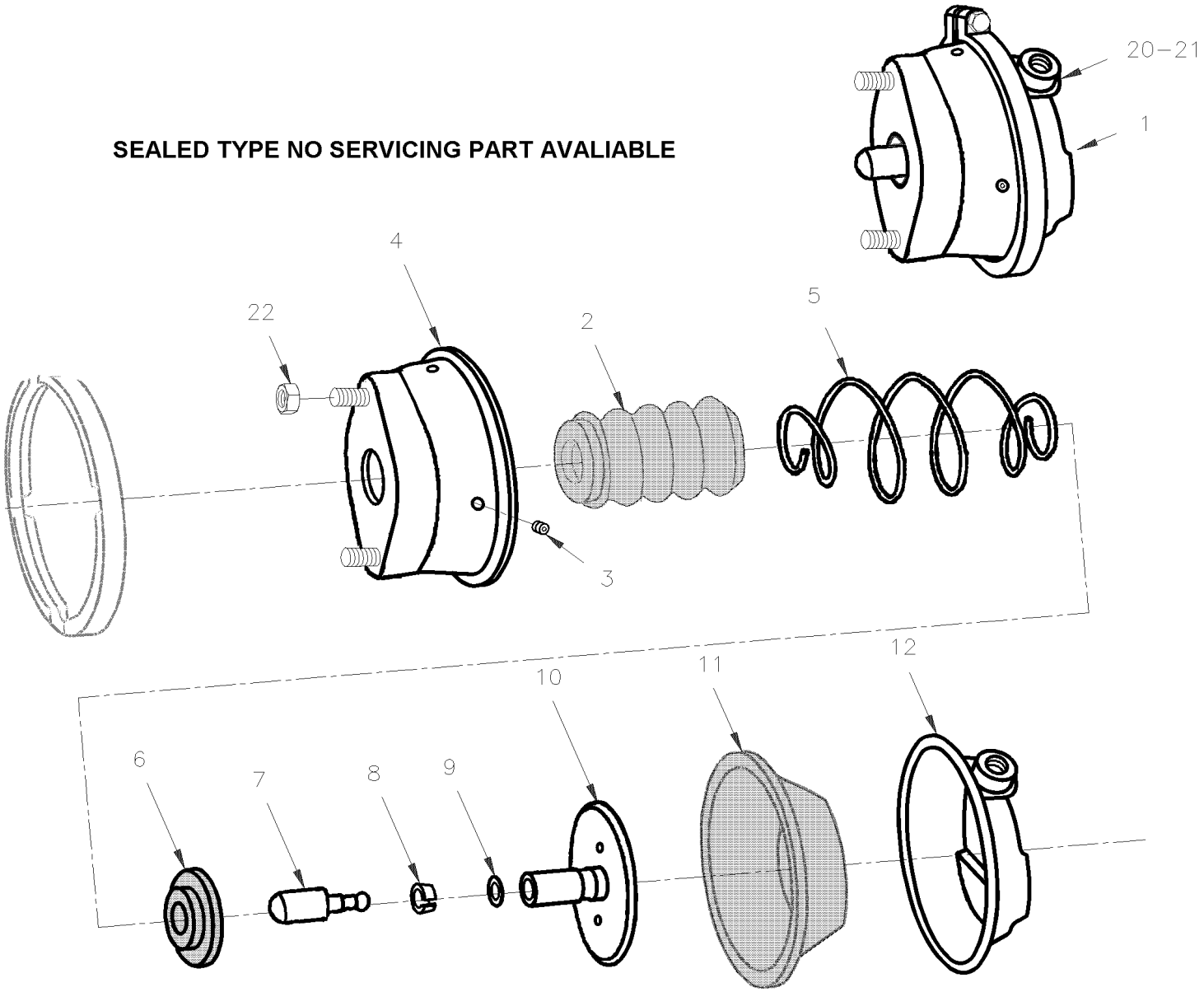

From 8-9279 To 8-9339		Date:07/2024	PAGE:Y2-1245-12

BRAKE CHAMBER - TAG AXLE TYPE 14 & 16

Item#	Part	Description	XLII 45	XLII MTH40	XLII MTH45	XLII MTH45E	NOTES
1	642087	BRAKE CHAMBER ASSY / TYPE 14 / SEALED			2	2	ABS
1	642086	BRAKE CHAMBER ASSY / TYPE 16 / SEALED			2	2	ESP
2	N.S.S.	. BOOT			1	1	1
3	N.S.S.	. HOLE PLUG			1	1	1
4	N.S.S.	. CHAMBER , NO-PRESSURE			1	1	1
5	N.S.S.	. SPRING, COMP.			1	1	1
6	N.S.S.	. SPRING SEAT			1	1	1
7	N.S.S.	. PUSH ROD END			1	1	1
8	N.S.S.	. RETAINER			1	1	1
9	N.S.S.	. RING			1	1	1
10	N.S.S.	. PUSH ROD			1	1	1
11	N.S.S.	. DIAPHRAGM / TYPE 16			1	1	1
12	N.S.S.	. CHAMBER PRESSURE PLATE			1	1	1
13	N.S.S.	. CLAMP W/BOLT & NUT			1	1	1
20	660914	MALE ELBOW 90° / JIC 37° FITTING / #8JIC-MxM16-1.5-M STL			1	1	
. NS	641297	. O-RING 13.1MM I.D. X 2.6 TH			1	1	
. NS	641298	. WASHER FL 17MM I.D x 22MM O.D. x 1.5MM			1	1	
21	641903	HOSE BRAKE #8 1090MM (43")			1	1	
22	5001253	NUT HEX STO M16-1.5 G500			2	2	
		ABS) WITH "ABS"					
		ESP) WITH "ESP"					
		1) NOT SOLD SEPARATELY					

From Y-7046 To 8-9278		Date:07/2024	PAGE:Y2-1250-00
ANTI-LOCK BRAKING SYSTEM			

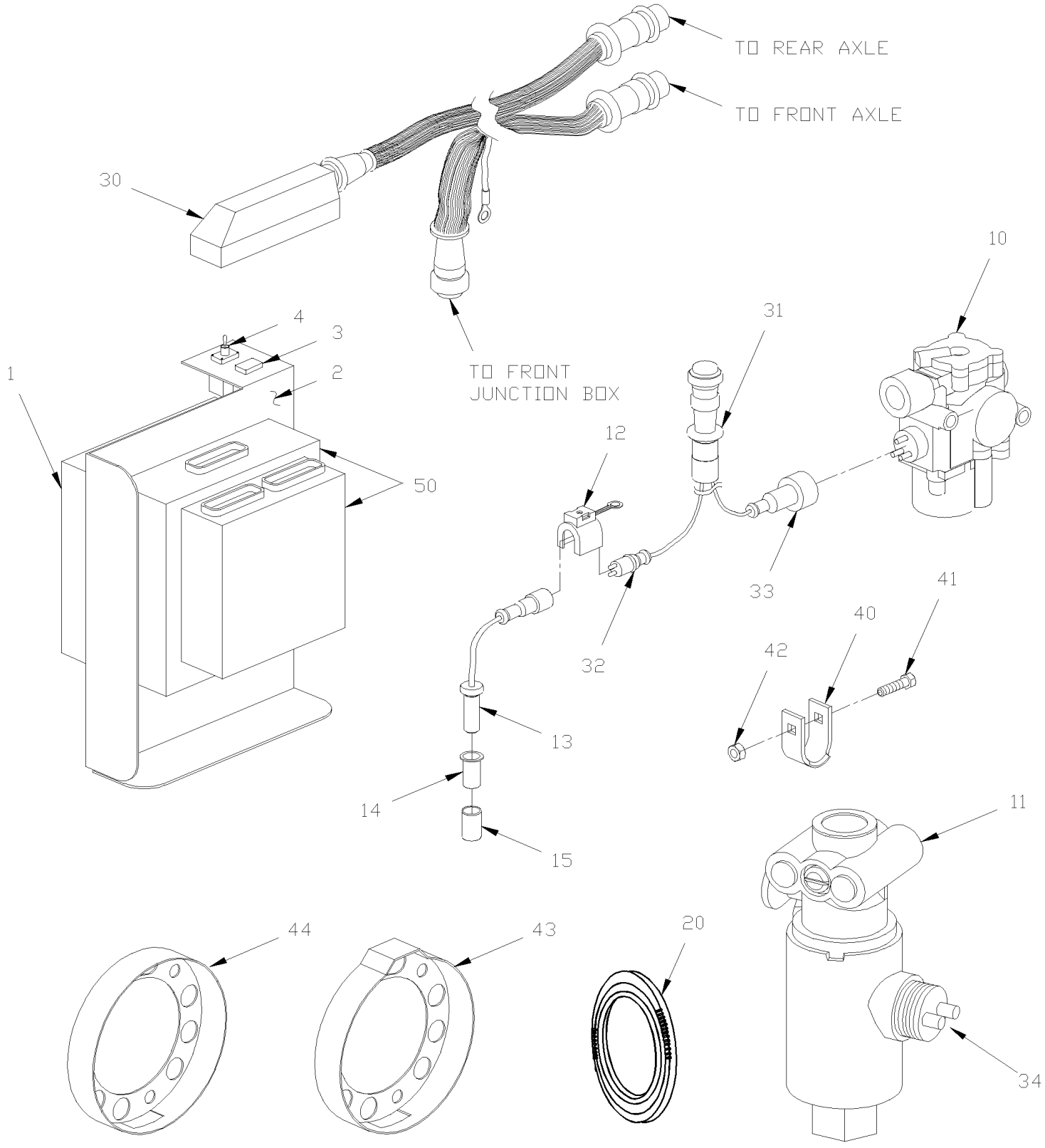

From Y-7046 To 8-9278		Date:07/2024	PAGE:Y2-1250-00

ANTI-LOCK BRAKING SYSTEM

Item#	Part	Description	XLII 45	XLII MTH40	XLII MTH45	XLII MTH45E	NOTES
1	641446	CONTROL UNIT 24V / ABS 4 CH To 1-7648	1	1	1	1	
1	641940	CONTROL UNIT 24V / ABS 4 CH From 1-7649 To 2-7832	1	1	1	1	
1	642164	CONTROL UNIT 24V / ABS 4 CH To 2-7832	1	1	1	1	
1	7770363	CONTROL UNIT 12V / ABS 4 CH / UNPROGRAMMED From 2-7833	1	1	1	1	
1	641948P	CONTROL UNIT 12V / ABS 4 CH / PROGRAMMED From 2-7833	1	1	1	1	
1	641947	CONTROL UNIT 12V / ABS 4 CH From 2-7833	AR				C
1	641947	CONTROL UNIT 12V / ABS 4 CH From 2-7833		1	1	1	C
1	502511	NUT HEX NYRT M6-1.0 Z050	7	7	7	7	
1	502573	WASHER FL 6.4x12.5x1.6 SS	7	7	7	7	
2	064891	SUPPORT / MODULE To 1-7722	1	1	1	1	
2	065573	SUPPORT / MODULE From 1-7723 To 2-7738	1	1	1	1	
2	065584	SUPPORT / MODULE From 2-7739 To 2-7832	1	1	1	1	
2	065650	SUPPORT / MODULE From 2-7833 To 3-8164	1	1	1	1	
2	065852	SUPPORT / MODULE From 4-8165 To 7-9043	1	1	1	1	
2	066839	SUPPORT / MODULE From 7-9044		1	1	1	
3	562113	TELLTALE ASSY / 24V SHORT To 2-7738	1	1	1	1	
NS	391672	INSERT / RED / "ABS" To 2-7738	1	1	1	1	
4	560254	SWITCH / OFF-M/ON / S.P.S.T.	1	1	1	1	
NS	063373	DECAL ABS SYSTEM	1	1	1	1	
10	641537	VALVE, "ABS" 24VOLT To 2-7832	4	4	4	4	
10	641951	VALVE, "ABS" 12VOLT From 2-7833	4	4	4	4	
11	641460	VALVE, "ATC" 24VOLT To 2-7832	2	2	2	2	
11	641950	VALVE, "ATC" 12VOLT From 2-7833	2	2	2	2	
12	561115	CLAMP W/ 3 & 4 / ITT CANNON 029-0262-000	4	4	4	4	
13	641095	SENSOR ABS (ON FRONT & DRIVE AXLE) To 2-7832	2	2	2	2	
13	641099	SENSOR ABS (ON FRONT & DRIVE AXLE) From 2-7833 To 3-8164	2	2	2	2	R
13	641099	SENSOR ABS (ON FRONT & DRIVE AXLE) From 3-8165	2	2	2	2	I
13	641288	SENSOR ABS (ON FRONT AXLE) 90° ANGLE To 2-7832	2	2	2	2	
13	641946	SENSOR ABS (ON FRONT AXLE) 90° ANGLE From 2-7833 To 3-8164	2	2	2	2	
13	641946	SENSOR ABS (ON FRONT AXLE) 90° ANGLE From 4-8165	2	2	2	2	R
14	641096	CLIP, SPRING / TO FIX SENSOR	2	2	2	2	
15	621684	BUSHING ABS SENSOR MOUNTING DRIVE AXLE To 7-9158	1	1	1	1	A
15	621869	BUSHING - ABS SENSOR From 7-9159	1	1	1	1	A
20	611255	TOOTH WHEEL / FRONT AXLE W/DISC "G.K.N." To 3-8164	2	2	2	2	
20	611304	TOOTH WHEEL / FRONT AXLE W/ "TIMKEN" 138.89MM I.D. From 4-8165		1	1	1	I
20	611473	TOOTH WHEEL / FRONT AXLE & TAG W/ "FAG" 143.90MM I.D. SERVICE	1	1	1	1	I D
NS	611457	ROTOR VENTED (W/TOOTH WHEEL / DRIVE AXLE)	1	1	1	1	
NS	562279	TOOL / BOX CONNECTOR 54 PINS	1	1	1	1	
31	064640	CABLE ASSY / FRONT "ABS" SENSOR & VALVE To 2-7832	1	1	1	1	
31	065632	CABLE ASSY / FRONT "ABS" SENSOR & VALVE From 2-7833	1	1	1	1	
31	064876	CABLE ASSY / REAR "ABS" SENSOR & VALVE To 2-7832	1	1	1	1	
31	065634	CABLE ASSY / REAR "ABS" SENSOR & VALVE From 2-7833	1	1	1	1	

From Y-7046 To 8-9278		Date:07/2024	PAGE:Y2-1250-00

ANTI-LOCK BRAKING SYSTEM

Item#	Part	Description	XLII 45	XLII MTH40	XLII MTH45	XLII MTH45E	NOTES
32	641132	. CONNECTOR / MALE W2 WIRES x 3 METER / WABCO 8945900102	AR	AR	AR	AR	
33	641098	. CONNECTOR / FEMALE W3 WIRES x 3 METER / WABCO 8946010102	AR	AR	AR	AR	
34	641461	CONNECTOR / FEMALE W2 WIRES x 15 METER / WABCO 4495211500 To 2-7832	AR	AR	AR	AR	C
NS	140412	DUST PROTECTOR SENSOR KIT To 4-8172	1	1	1	1	
40	140409	. PROTECTOR "U" SHAPE / SS To 4-8172	2	2	2	2	
41	5001539	. SCREW CRG 1/4-20x1 1/2 SS To 4-8172	2	2	2	2	
42	5001105	. NUT HEXF 1/4-20 Z050 To 4-8172	2	2	2	2	
43	148977	. ABS SHIELD PROTECTOR W/BULGE To 4-8172	1				B
44	621711	. ABS SHIELD PROTECTOR From 4-8173	1				
50	**Y2-0750-00**	**AUTOMATIC TRANSMISSION - "WORLD" WITH DETROIT S-60**					
52	**Y2-0750-01**	**AUTOMATIC TRANSMISSION - "WORLD" WITH DETROIT S-60**					
		A) DRIVE AXLE ONLY					
		B) OPTION "ORLEANS"					
		C) USE WITH "ATC" VALVE OR WITH TRAILER EQUIPPED WITH "ABS"					
		D) WITH HUB "FAG" ONLY					
		I) WITH INDEPENDANT FRONT AXLE					
		R) WITH I BEAM RIGID FRONT AXLE					

From 4-8165 To 8-9339		Date:07/2024	PAGE:Y2-1250-10
ABS BRAKE VALVE INSTALLATION			

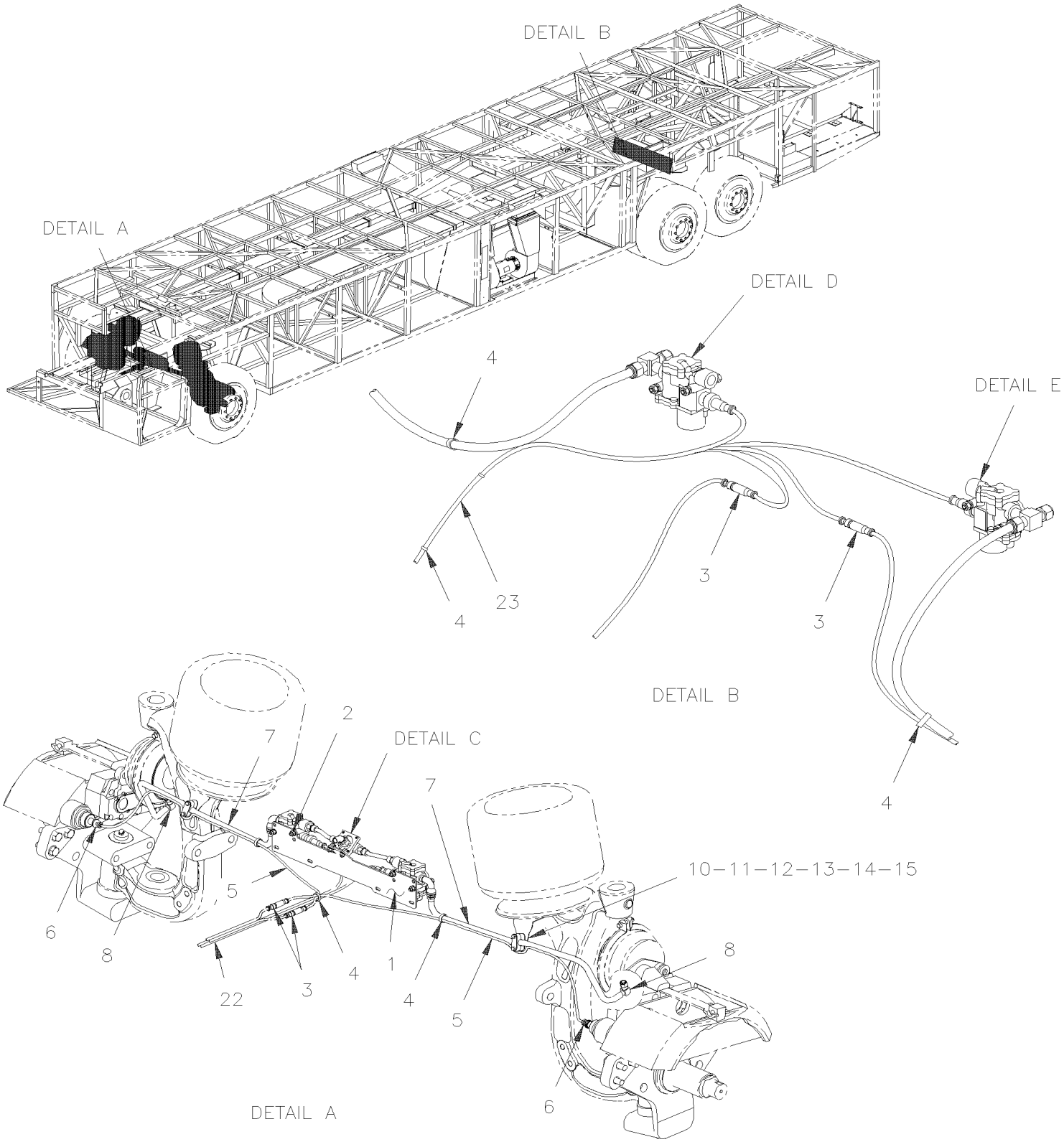

From 4-8165 To 8-9339		Date:07/2024	PAGE:Y2-1250-10
ABS BRAKE VALVE INSTALLATION			

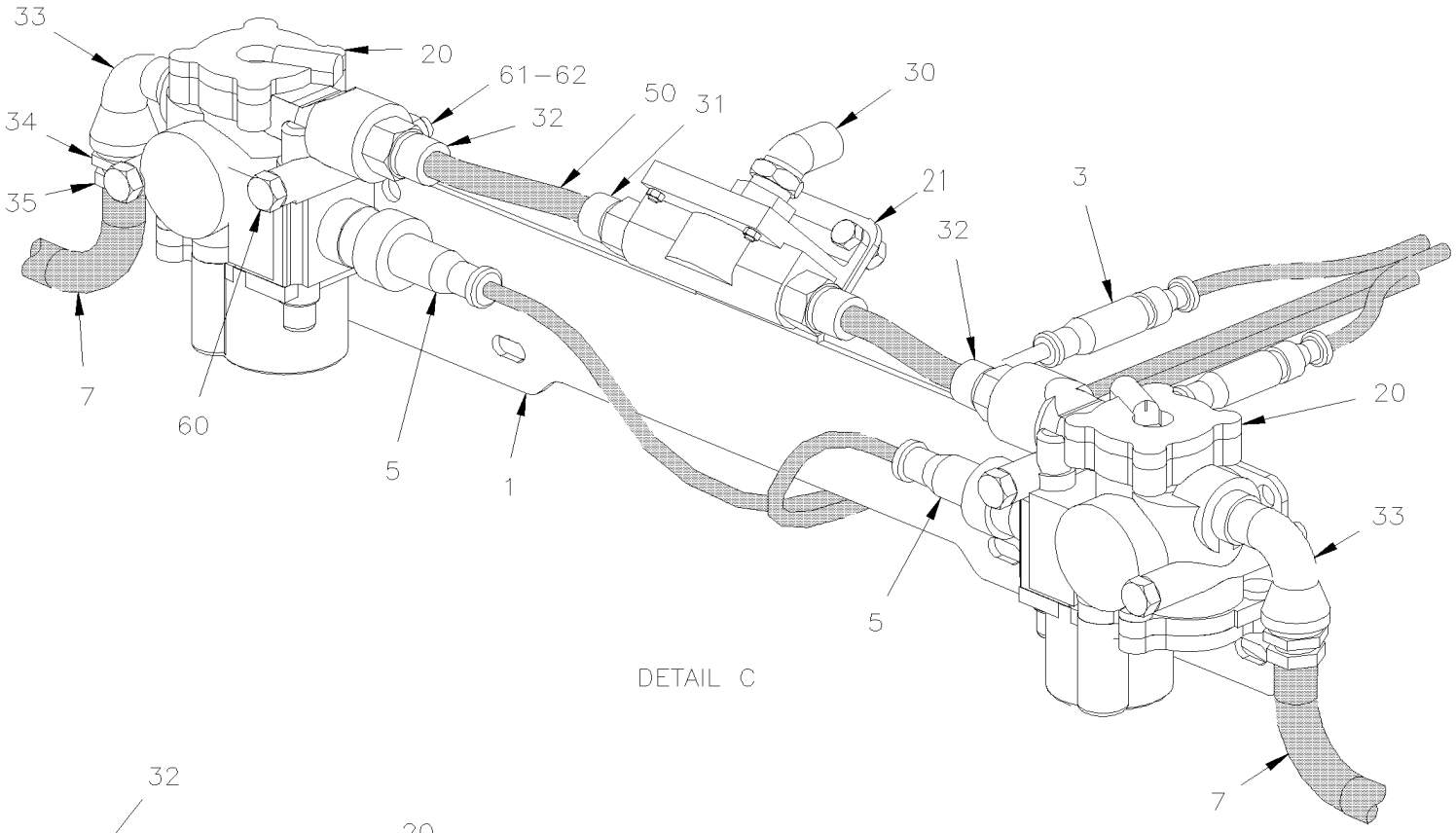

DETAIL C

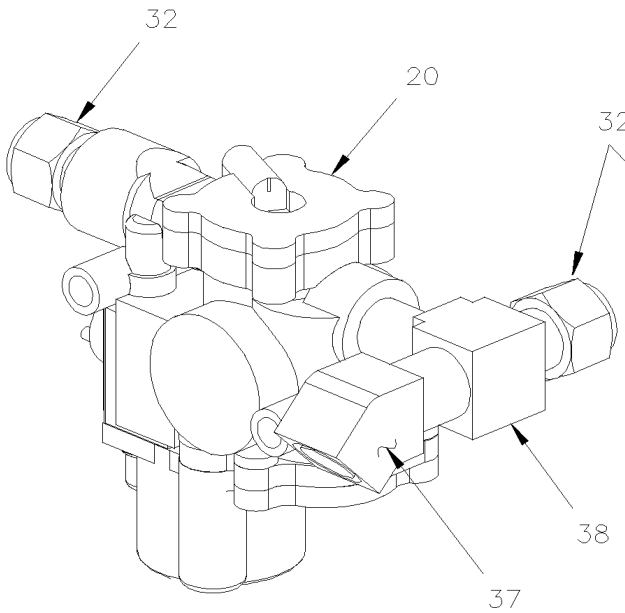

DETAIL D

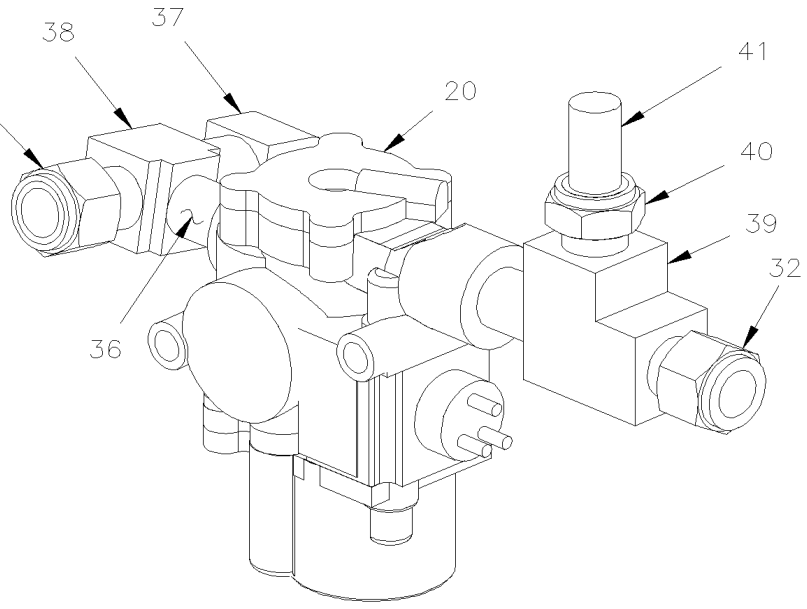

DETAIL E

From 4-8165 To 8-9339		Date:07/2024	PAGE:Y2-1250-10

ABS BRAKE VALVE INSTALLATION

Item#	Part	Description	XLII 45	XLII MTH40	XLII MTH45	XLII MTH45E	NOTES
1	142303	SUPPORT		1	1	1	
2	502565	NUT HEX M6-1.0 SS		4	4	4	
NS	502570	WASHER LO SPT 6.1x11.8x1.6 SS		4	4	4	
NS	502573	WASHER FL 6.4x12.5x1.6 SS		4	4	4	
3	561115	CLAMP W/ 3 & 4 / ITT CANNON 029-0262-000		4	4	4	
4	504637	CABLE TIE / 3/16" x 13"		AR	AR	AR	
5	641099	SENSOR ABS (ON FRONT & DRIVE AXLE) To 8-9278		2	2	2	
5	642085	SENSOR ABS - OEM From 8-9279			2	2	
5	642184	SENSOR ABS - AFTER MARKET			2	2	
6	641096	CLIP, SPRING / TO FIX SENSOR		4	4	4	
7	641903	HOSE BRAKE #8 1090MM (43")		2	2	2	
8	660914	MALE ELBOW 90° / JIC 37° FITTING / #8JIC-MxM16-1.5-M STL		2	2	2	
. NS	641297	. O-RING 13.1MM I.D. X 2.6 TH		1	1	1	
. NS	641298	. WASHER FL 17MM I.D x 22MM O.D. x 1.5MM		1	1	1	
10	142352	HOSE SUPPORT R.H.		1	1	1	
10	142353	HOSE SUPPORT L.H.		1	1	1	
11	504612	COLLAR 13/16" I.D. / TO FIX HOSE		4	4	4	
12	504614	PLATE RETAINING / COLLAR		4	4	4	
13	502656	SCREW CAP HEX M6-1.0x50 SS		4	4	4	
14	502570	WASHER LO SPT 6.1x11.8x1.6 SS		4	4	4	
15	502565	NUT HEX M6-1.0 SS		4	4	4	
20	641951	VALVE, "ABS" 12VOLT	4	4	4	4	
21	641429	VALVE, QUICK RELEASE QR-1 / 3/8NPTx3/8NPTx3/8NPT	4	4	4	4	
. NS	640924	. REPAIR KIT / QR-1	1	1	1	1	
22	065632	CABLE ASSY / FRONT "ABS" SENSOR & VALVE	1	1	1	1	
23	065634	CABLE ASSY / REAR "ABS" SENSOR & VALVE	1	1	1	1	
30	641368	MALE ELBOW 45° NON-SWIVEL / PUSH-IN FITTING / #8x3/8NPT-M BR		1	1	1	
31	641381	MALE CONNECTOR / PUSH-IN FITTING / #8x3/8NPT-M BR		2	2	2	
32	641383	MALE CONNECTOR / PUSH-IN FITTING / #8x1/2NPT-M BR	2	2	2	2	
33	501406	STREET ELBOW 90º / PIPE FITTING / 1/2NPT-Mx1/2NPT-F BR		2	2	2	
34	501534	BUSHING REDUCER / PIPE FITTING / 1/2NPT-Mx3/8NPT-F BR		2	2	2	
35	501842	ADAPTER / AIR BRAKE HOSE FITTING / 3/4-20-Mx3/8NPT-M STL		2	2	2	
36	5011067	NIPPLE HEX / PIPE FITTING / 1/2NPT-Mx1/2NPT-Mx1 13/16 BR		2	2	2	
37	501528	STREET ELBOW 45º / PIPE FITTING / 1/2NPT-Mx1/2NPT-F BR		2	2	2	
38	501472	FEMALE UNION TEE / PIPE FITTING / 1/2NPT-Fx1/2NPT-Fx1/2NPT-F BR		2	2	2	
39	501473	MALE RUN TEE / PIPE FITTING / 1/2NPT-Mx1/2NPT-Fx1/2NPT-F BR		1	1	1	
40	501316	BUSHING REDUCER / PIPE FITTING / 1/2NPT-Mx1/4NPT-F BR		1	1	1	
41	641332	MALE CONNECTOR / PUSH-IN FITTING / #4x1/4NPT-M BR		1	1	1	
50	**Y2-1202-00**	**TUBES PLASTIC / AIR D.O.T.**					
60	500187	SCREW CAP HEX 5/16-18x3 G5 Z050		AR	AR	AR	
61	500476	WASHER LO SPT .317x.586x.078 Z050		AR	AR	AR	
62	500778	NUT HEX 5/16-18 N500		AR	AR	AR	

		Date:07/2024	Y2-13
WHEELS, HUBS & TIRES			

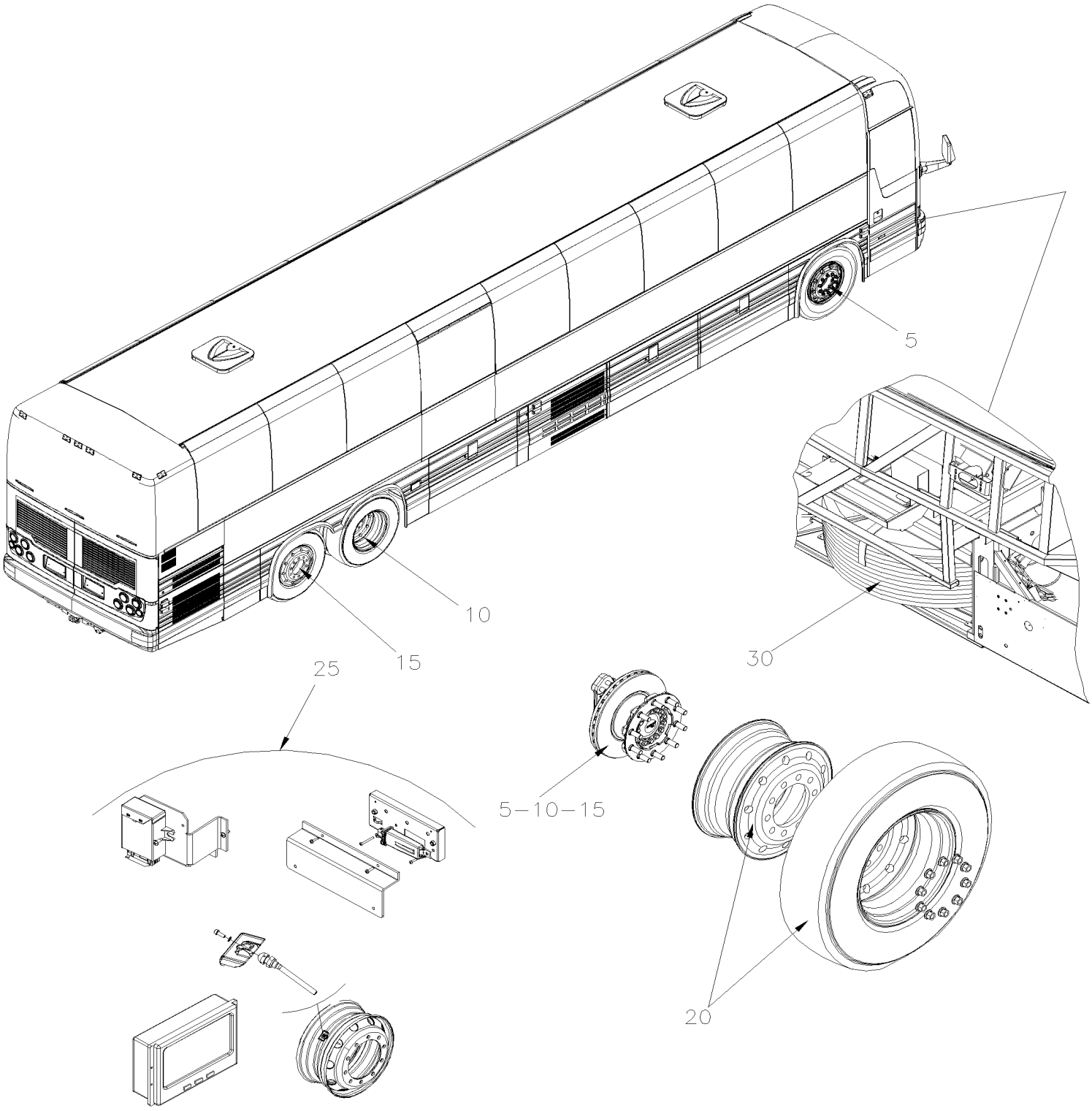

		Date:07/2024	Y2-13

WHEELS, HUBS & TIRES

Item#	Part	Description	XLII 45	XLII MTH40	XLII MTH45	XLII MTH45E	NOTES
5	Y2-1300-00	HUB & ROTOR - FRONT AXLE MODEL "S-84" & "IS84" From Y-7046 To 3-8164					
5	Y2-1300-01	HUB & ROTOR - FRONT AXLE MODEL "NSD80" From 1-7455 To 1-7455					
5	Y2-1300-02	HUB & ROTOR - FRONT AXLE MODEL "S84U" & "NDIFS80P" From 4-8165 To 8-9339					
5	Y2-1300-99	HUB & ROTOR - FRONT AXLE MODEL "S84U" & "NDIFS80P" From Y-7046 To 3-8164					
10	Y2-1305-00	HUB & ROTOR - DRIVE AXLE From Y-7046 To 8-9339					
10	Y2-1305-99	ROTOR (SPLINED DISC) PRODUCT IMPROVMENT From Y-7046 To 8-9339					
15	Y2-1310-00	HUB & ROTOR - TAG AXLE TYPE TS6 From Y-7046 To 3-8164					
15	Y2-1310-01	HUB & ROTOR - TAG AXLE TYPE TS8U From 4-8165 To 8-9339					
15	Y2-1310-99	HUB & ROTOR - TAG AXLE TYPE TS8U RETROFIT "UNITISED" BEARING From Y-7046 To 3-8164					
20	Y2-1318-00	WHEELS & COMPONENTS - BUS MOUNT (STANDARD) From Y-7046 To 2-7766					
20	Y2-1318-01	WHEELS & COMPONENTS - TRUCK MOUNT (METRIC) From 2-7767 To 8-9339					
25	Y2-1318-99	TIRE MONITOR - PRESSURE & TEMPERATURE / "RETROFIT" From Y-7046 To 8-9339					
30	Y2-1325-00	SPARE WHEEL - INSTALLATION From Y-7046 To 8-9339					

From Y-7046 To 3-8164		Date:07/2024	PAGE:Y2-1300-00
HUB & ROTOR - FRONT AXLE MODEL "S-84" & "IS84"			

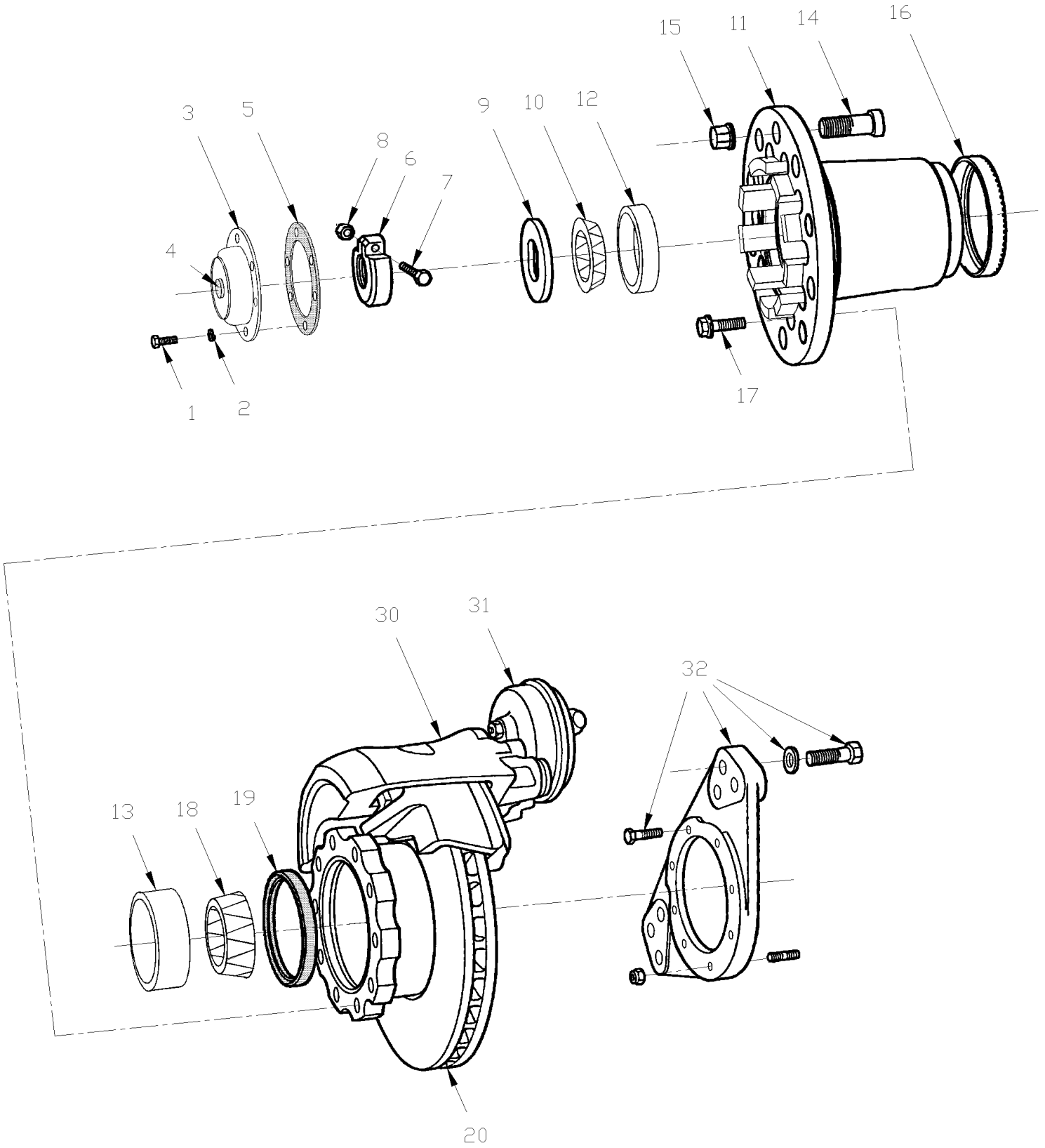

From Y-7046 To 3-8164		Date:07/2024	PAGE:Y2-1300-00

HUB & ROTOR - FRONT AXLE MODEL "S-84" & "IS84"

Item#	Part	Description	XLII 45	XLII MTH40	XLII MTH45	XLII MTH45E	NOTES
1	502790	SCREW CAP HEX M8-1.25x20 G8.8 Z050	6	6	6	6	
2	5001003	WASHER LO SPT 8.1x12.7x2.0 Z050	6	6	6	6	
3	611243	HUB CAP / W/GREASE ONLY	1				
3	611210	HUB CAP / ALUMINUM / "STEMCO"	1	1	1	1	
. NS	MI07-04	. SEE MAINTENANCE INFORMATION	1	1	1	1	
4	611211	. KIT, HUB CAP WINDOW	1	1	1	1	
NS	611242	. PLUG VENT / RED / W/ALU HUB CAP "STEMCO"	1	1	1	1	
5	611261	. GASKET HUB CAP / "STEMCO"	1	1	1	1	
6	611004	NUT ADJUSTING M45-2	1	1	1	1	
. NS	490845	. TOOL / NUT WHEEL BEARING ADJUSTMENT	1	1	1	1	
. NS	684735	. TOOL / NUT WHEEL BEARING ADJUSTMENT / TORQUE	1	1	1	1	
. NS	MI03-24	. SEE MAINTENANCE INFORMATION	1	1	1	1	
7	500054	SCREW CAP HEX 3/8-24x2 1/2 G5 ZP	1	1	1	1	
8	500704	NUT HEX STO 3/8-24 Z050	1	1	1	1	
9	611003	LOCK PLATE	1	1	1	1	
10	610126	CONE BEARING / OUTER WHEEL BEARING	1	1	1	1	
11	611202	HUB WHEEL / W/STANDARD WHEEL To 2-7766	1	1	1	1	
11	611259	HUB WHEEL / W/METRIC WHEEL From 2-7767	1	1	1	1	
12	610125	CUP BEARING / OUTER WHEEL BEARING	1	1	1	1	
13	610997	CUP BEARING / INNER WHEEL BEARING	1	1	1	1	
14	610995	STUD / L.H. / W/STUD-MOUNT WHEEL	10	10	10	10	
NS	610996	STUD / R.H. / W/STUD-MOUNT WHEEL	10	10	10	10	
14	611207	STUD / R.H. / W/HUB-MOUNT WHEEL M22-1.5 x 81MM	10	10	10	10	
NS	611208	STUD / R.H. / W/HUB-MOUNT WHEEL 7/8-14	10	10	10	10	C
15	610175	NUT L.H. 1 1/8-16 / STUD MOUNT WHEEL	10	10	10	10	
NS	610176	NUT R.H. 1 1/8-16 / STUD MOUNT WHEEL	10	10	10	10	
NS	611189	NUT R.H. / W/HUB-MOUNT WHEEL M22-1.5 / 30MM TH To 3-8128	10	10	10	10	
15	20434082	NUT R.H. / W/HUB-MOUNT WHEEL M22-1.5 / 27 MM TH From 3-8129	10	10	10	10	
NS	610773	NUT R.H. / W/HUB-MOUNT WHEEL 7/8-14	10	10	10	10	C
16	**Y2-1250-00**	**ANTI-LOCK BRAKING SYSTEM**					
17	611007	SCREW CAP HEXF SERR M16-1.5x50 G10.9	10	10	10	10	
18	611087	CONE BEARING / INNER WHEEL BEARING	1	1	1	1	
19	611081	SEAL ASSY/ WHEEL BEARING W/OIL	1	1	1	1	
19	611247	SEAL ASSY/ WHEEL BEARING W/OIL	1	1	1	1	
19	611174	SEAL ASSY / W/OIL / "SCOTT-SEAL PLUS"	AR	AR	AR	AR	
20	611188	ROTOR SOLID	1	1	1	1	
20	611456	ROTOR VENTED	1	1	1	1	
30	**Y2-1225-00**	**BRAKE PARTS - FRONT AXLE - W/"KNORR-BREMSE" / SB7 SERIES**					
31	**Y2-1225-10**	**BRAKE CHAMBER - FRONT AXLE TYPE 22**					
31	**Y2-1225-11**	**BRAKE CHAMBER - FRONT AXLE TYPE 24**					
32	**Y2-1225-00**	**BRAKE PARTS - FRONT AXLE - W/"KNORR-BREMSE" / SB7 SERIES**					
NS	684644	SEAL INSTALLER TOOL / FRT & TAG TS-5	1	1	1	1	

From Y-7046 To 3-8164		Date:07/2024	PAGE:Y2-1300-00

HUB & ROTOR - FRONT AXLE MODEL "S-84" & "IS84"

Item#	Part	Description	XLII 45	XLII MTH40	XLII MTH45	XLII MTH45E	NOTES
41	611328	KIT, RETROFIT RIGID FRONT AXLE / UNITISED To 3-8164	1	1	1	1	
. NS	611289	. KNUCKLE L.H. STREET SIDE To 3-8164	1	1	1	1	
. NS	611290	. KNUCKLE R.H. CURBSIDE To 3-8164	1	1	1	1	
. NS	611949	. HUB NUT 1 3/4-8 To 3-8164	2	2	2	2	
. NS	611948	. THRUST WASHER To 3-8164	2	2	2	2	
. NS	611955	. SCREW CAP HEXF M14-1.5x78 G12.9 N500 To 3-8164	28	28	28	28	
. NS	611301	. HUB FLANGE To 3-8164	2	2	2	2	
. NS	611953	. HUB ASSY / UNITISED L.H. & R.H. "TIMKEN" To 3-8164	2	2	2	2	
. NS	611300	. ROTOR VENTED To 3-8164	2	2	2	2	
. NS	611028	. STUD / STREET SIDE / 3/4-16 X 3" To 3-8164	2	2	2	2	
. NS	611330	. STUD 3/4-16 X 3 7/8" To 3-8164	1	1	1	1	
. NS	611331	. STUD / CURBSIDE / 3/4-16 X 4 1/4" To 3-8164	2	2	2	2	
. NS	611332	. STUD 1/2-20 X 1 7/8 To 3-8164	16	16	16	16	
42	611329	KIT, RETROFIT INDE FRONT AXLE / UNITISED To 3-8164	1	1	1	1	
. NS	611334	. KNUCKLE L.H. / W/PARALLEL KING PIN ONLY W/RETROFIT UNITISED To 3-8164	1	1	1	1	
. NS	611335	. KNUCKLE R.H. / W/PARALLEL KING PIN ONLY W/RETROFIT UNITISED To 3-8164	1	1	1	1	
. NS	611949	. HUB NUT 1 3/4-8 To 3-8164	2	2	2	2	
. NS	611948	. THRUST WASHER To 3-8164	2	2	2	2	
. NS	611955	. SCREW CAP HEXF M14-1.5x78 G12.9 N500 To 3-8164	28	28	28	28	
. NS	611301	. HUB FLANGE To 3-8164	2	2	2	2	
. NS	611303	. HUB ASSY / UNITISED L.H. & R.H. "TIMKEN" To 3-8164	2	2	2	2	
. NS	611300	. ROTOR VENTED To 3-8164	2	2	2	2	
. NS	611166	. STUD 3/4-16 X 3 1/4" To 3-8164	2	2	2	2	
. NS	611167	. STUD 3/4-16 X 4 1/2" To 3-8164	3	3	3	3	
. NS	611331	. STUD / CURBSIDE / 3/4-16 X 4 1/4" To 3-8164	2	2	2	2	
. NS	611332	. STUD 1/2-20 X 1 7/8 To 3-8164	16	16	16	16	
		C) CUSTOMMER SPECIAL "OPTION"					

From 1-7455 To 1-7455		Date:07/2024	PAGE:Y2-1300-01
HUB & ROTOR - FRONT AXLE MODEL "NSD80"			

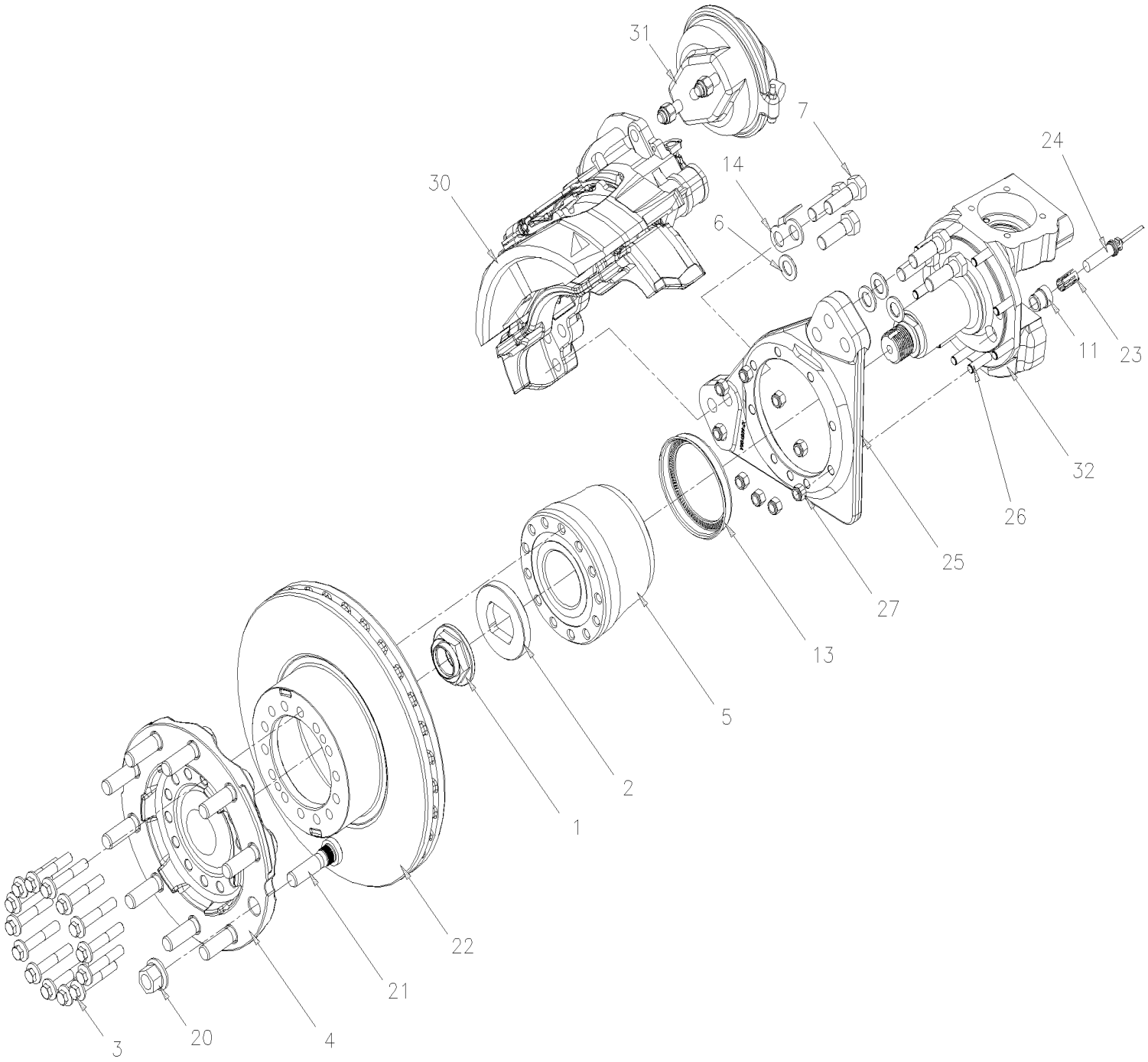

From 1-7455 To 1-7455		Date:07/2024	PAGE:Y2-1300-01

HUB & ROTOR - FRONT AXLE MODEL "NSD80"

Item#	Part	Description	XLII 45	XLII MTH40	XLII MTH45	XLII MTH45E	NOTES
1	611949	HUB NUT 1 3/4-8	1				
2	611948	THRUST WASHER	1				
3	611955	SCREW CAP HEXF M14-1.5x78 G12.9 N500	14				S
4	611950	HUB FLANGE	1				
5	611953	HUB ASSY / UNITISED L.H. & R.H. "TIMKEN"	1				R S
5	611471	HUB ASSY / UNITISED L.H. & R.H. "FAG" ASSY W/"ABS" RING	1				R S
. NS	N.S.S.	. TOOTH WHEEL	1				1 R S
. NS	509939	. SCREW DRV RND #4x1/4 SS	3				R S
NS	491115	TOOL, HUB INSTALLER W/UNITISED BEARING / 70MM	1				
. NS	NDS8	. MAINTENANCE INSTRUCTION	1				
6	611044	WASHER FL HARD 21.0x37.0x3.0 N500	6				
7	611308	SCREW CAP HEX M20-2.5x100 G12.9	4				
7	5001193	SCREW CAP HEX M20-2.5x65 G10.9 ZP	2				
7	5001529	SCREW CAP HEX M20-1.5x60 G10.9 G500	6				
13	N.S.S.	TOOTH WHEEL / FRONT AXLE RIGID INCLUDE WITH ITEM #5	1				1 R
14	110786	BRAKE WEAR INDICATOR MECHANICAL / 44MM	AR				
20	610175	NUT L.H. 1 1/8-16 / STUD MOUNT WHEEL	10				
20	610176	NUT R.H. 1 1/8-16 / STUD MOUNT WHEEL	10				
20	610773	NUT R.H. / W/HUB-MOUNT WHEEL 7/8-14	10				
20	20434082	NUT R.H. / W/HUB-MOUNT WHEEL M22-1.5 / 27 MM TH	10				
21	610995	STUD / L.H. / W/STUD-MOUNT WHEEL	10				
21	610996	STUD / R.H. / W/STUD-MOUNT WHEEL	10				
21	610994	STUD / R.H. / W/HUB-MOUNT WHEEL 7/8-14	10				
21	611208	STUD / R.H. / W/HUB-MOUNT WHEEL 7/8-14	10				
22	611954	ROTOR VENTED	1				
23	641096	CLIP, SPRING / TO FIX SENSOR	1				
24	**Y2-1250-00**	**ANTI-LOCK BRAKING SYSTEM**	1	1	1	1	
25	611951	CALIPER MOUNTING BRACKET R.H.	1				
25	611952	CALIPER MOUNTING BRACKET L.H.	1				
26	611030	STUD 1/2-20 X 1 11/16"	AR				
27	5007001	NUT HEX STO 1/2-20 Z050 G "C"	AR				
30	**Y2-1225-00**	**BRAKE PARTS - FRONT AXLE - W/"KNORR-BREMSE" / SB7 SERIES**					
30	**Y2-1225-01**	**BRAKE PARTS "KNORR-BREMSE" SN7 SERIES**					
30	**Y2-1225-02**	**BRAKE PARTS "KNORR-BREMSE" SN7 SERIES W/NEW SLIDE PINS**	1	1	1	1	
31	**Y2-1225-10**	**BRAKE CHAMBER - FRONT AXLE TYPE 22**					
31	**Y2-1225-11**	**BRAKE CHAMBER - FRONT AXLE TYPE 24**					
32	**Y2-1005-01**	**FRONT AXLE - I BEAM RIGID MODEL "NSD80"**					
NS	MI08-04	SEE MAINTENANCE INFORMATION	1				
		R) WITH I BEAM RIGID SUSPENSION					

From 1-7455 To 1-7455		Date:07/2024	PAGE:Y2-1300-01

HUB & ROTOR - FRONT AXLE MODEL "NSD80"

Item#	Part	Description	XLII 45	XLII MTH40	XLII MTH45	XLII MTH45E	NOTES
		S) INSPECTED ALL BOLTS FOR DAMAGE TO THE THREAD AND ON THE SURFACE BELOW THE HEAD WHEN YOU DISASSEMBLED OR UNSCREWED THE HUB AND REPLACE IF NECESSARY					
		1) NOT SOLD SEPARATELY					
		1) NOT SOLD SEPARATELY					

From 4-8165 To 8-9339		Date:07/2024	PAGE:Y2-1300-02
HUB & ROTOR - FRONT AXLE MODEL "S84U" & "NDIFS80P"			

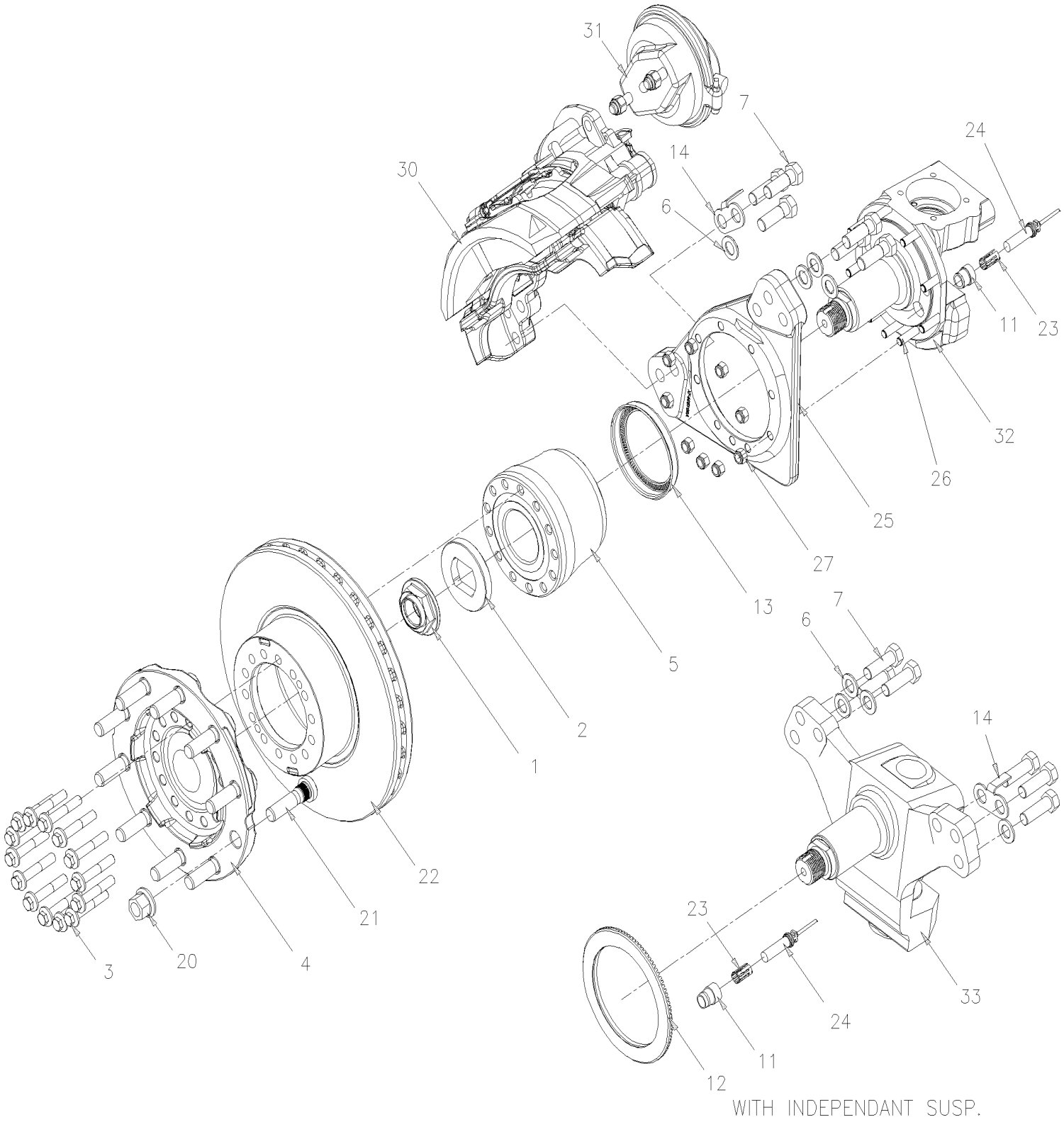

From 4-8165 To 8-9339		Date:07/2024	PAGE:Y2-1300-02

HUB & ROTOR - FRONT AXLE MODEL "S84U" & "NDIFS80P"

Item#	Part	Description	XLII 45	XLII MTH40	XLII MTH45	XLII MTH45E	NOTES
1	611949	HUB NUT 1 3/4-8	1	1	1	1	
2	611948	THRUST WASHER	1	1	1	1	
3	611955	SCREW CAP HEXF M14-1.5x78 G12.9 N500	14	14	14	14	S
4	611301	HUB FLANGE	1	1	1	1	
5	611953	HUB ASSY / UNITISED L.H. & R.H. "TIMKEN"	1				R S
5	611471	HUB ASSY / UNITISED L.H. & R.H. "FAG" ASSY W/"ABS" RING	1				R S
. NS	N.S.S.	. TOOTH WHEEL	1				1 R S
. NS	509939	. SCREW DRV RND #4x1/4 SS	3				R S
5	611303	HUB ASSY / UNITISED L.H. & R.H. "TIMKEN"	1	1	1	1	I S
5	611474	HUB ASSY / UNITISED L.H. & R.H. "FAG" ASSY W/"ABS" RING	1	1	1	1	I S
. NS	611472	. HUB ASSY / UNITISED L.H. & R.H. "FAG"	1	1	1	1	I S
. NS	611473	. TOOTH WHEEL / FRONT AXLE & TAG W/ "FAG" 143.90MM I.D.	1	1	1	1	I S
NS	491115	TOOL, HUB INSTALLER W/UNITISED BEARING / 70MM	1	1	1	1	
. NS	NDS8	. MAINTENANCE INSTRUCTION	1	1	1	1	
6	611044	WASHER FL HARD 21.0x37.0x3.0 N500	6	6	6	6	
7	611308	SCREW CAP HEX M20-2.5x100 G12.9 To 7-0869	4	4	4	4	
7	5001193	SCREW CAP HEX M20-2.5x65 G10.9 ZP To 7-0869	2	2	2	2	
7	5001529	SCREW CAP HEX M20-1.5x60 G10.9 G500 From 7-0870	6	6	6	6	
11	612384	BUSHING / ABS SENSOR	1	1	1	1	
12	611304	TOOTH WHEEL / FRONT AXLE W/ "TIMKEN" 138.89MM I.D.	1	1	1	1	I
12	611473	TOOTH WHEEL / FRONT AXLE & TAG W/ "FAG" 143.90MM I.D.	1	1	1	1	I D
13	N.S.S.	TOOTH WHEEL / FRONT AXLE RIGID INCLUDE WITH ITEM #5	1				1 R
14	110786	BRAKE WEAR INDICATOR MECHANICAL / 44MM	1	1	1	1	
20	20434082	NUT R.H. / W/HUB-MOUNT WHEEL M22-1.5 / 27 MM TH	10	10	10	10	
21	611207	STUD / R.H. / W/HUB-MOUNT WHEEL M22-1.5 x 81MM	10	10	10	10	
22	611300	ROTOR VENTED	1	1	1	1	
23	641096	CLIP, SPRING / TO FIX SENSOR	1	1	1	1	
24	642084	SENSOR ABS 90° ANGLE - OEM	1	1	1	1	
24	642085	SENSOR ABS - OEM	1	1	1	1	
24	642184	SENSOR ABS - AFTER MARKET	1	1	1	1	
25	611039	CALIPER MOUNTING BRACKET L.H. & R.H.	1	1	1	1	
26	611030	STUD 1/2-20 X 1 11/16"	AR	AR	AR	AR	
27	5007001	NUT HEX STO 1/2-20 Z050 G "C"	AR	AR	AR	AR	
30	**Y2-1225-00**	**BRAKE PARTS - FRONT AXLE - W/"KNORR-BREMSE" / SB7 SERIES**					
30	**Y2-1225-01**	**BRAKE PARTS "KNORR-BREMSE" SN7 SERIES**					
30	**Y2-1225-02**	**BRAKE PARTS "KNORR-BREMSE" SN7 SERIES W/NEW SLIDE PINS**	1	1	1	1	
31	**Y2-1225-10**	**BRAKE CHAMBER - FRONT AXLE TYPE 22**					
31	**Y2-1225-11**	**BRAKE CHAMBER - FRONT AXLE TYPE 24**					
32	**Y2-1005-00**	**FRONT AXLE - I BEAM RIGID MODEL "S-84"**					
33	**Y2-1005-50**	**FRONT AXLE - INDEPENDENT MODEL "IS-84" / 16500LBS**					
NS	MI08-04	SEE MAINTENANCE INFORMATION	1	1	1	1	

From 4-8165 To 8-9339		Date:07/2024	PAGE:Y2-1300-02

HUB & ROTOR - FRONT AXLE MODEL "S84U" & "NDIFS80P"

Item#	Part	Description	XLII 45	XLII MTH40	XLII MTH45	XLII MTH45E	NOTES
		D) WITH HUB "FAG" ONLY					
		I) WITH INDEPENDENT SUSPENSION					
		R) WITH I BEAM RIGID SUSPENSION					
		S) INSPECTED ALL BOLTS FOR DAMAGE TO THE THREAD AND ON THE SURFACE BELOW THE HEAD WHEN YOU DISASSEMBLED OR UNSCREWED THE HUB AND REPLACE IF NECESSARY					
		1) NOT SOLD SEPARATELY					
		1) NOT SOLD SEPARATELY					

From Y-7046 To 3-8164		Date:07/2024	PAGE:Y2-1300-99
HUB & ROTOR - FRONT AXLE MODEL "S84U" & "NDIFS80P"			

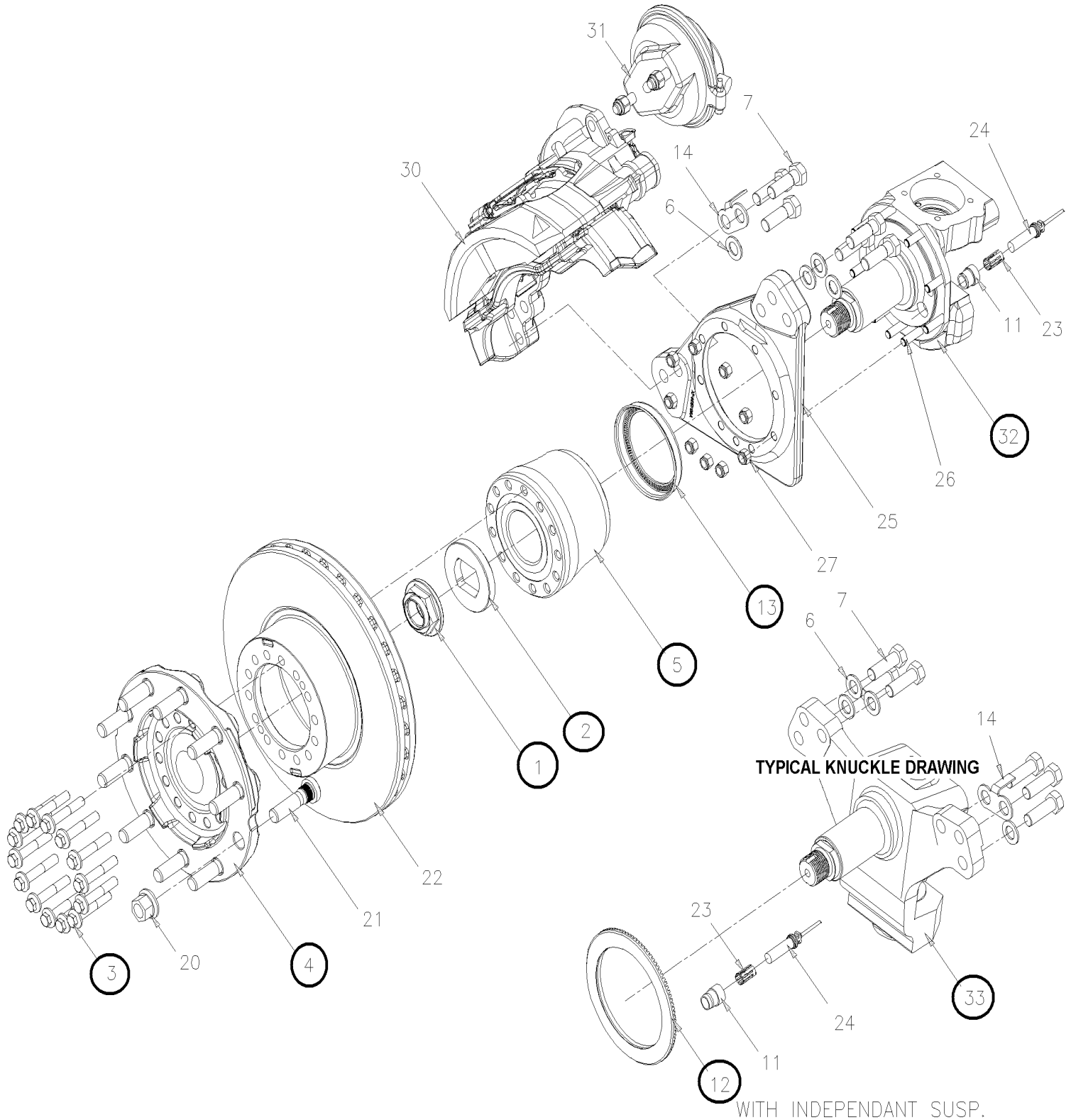

From Y-7046 To 3-8164		Date:07/2024	PAGE:Y2-1300-99

HUB & ROTOR - FRONT AXLE MODEL "S84U" & "NDIFS80P"

Item#	Part	Description	XLII 45	XLII MTH40	XLII MTH45	XLII MTH45E	NOTES
		. . . . . "WARNING" - "WARNING" - "WARNING"					
		THIS KIT DO NOT INCLUDE CALIPERS & BRAKE CHAMBER					
		KIT INCLUDE PARTS W/GREEN SPOT W/CIRCLE					
	611328	KIT, RETROFIT RIGID FRONT AXLE / UNITISED	1				
. NS	611289	. KNUCKLE L.H. STREET SIDE	1				
. NS	611290	. KNUCKLE R.H. CURBSIDE	1				
. NS	611949	. HUB NUT 1 3/4-8	2				
. NS	611948	. THRUST WASHER	2				
. NS	611955	. SCREW CAP HEXF M14-1.5x78 G12.9 N500	28				
. NS	611301	. HUB FLANGE	2				
. NS	611953	. HUB ASSY / UNITISED L.H. & R.H. "TIMKEN"	2				
. NS	611300	. ROTOR VENTED	2				
. NS	611028	. STUD / STREET SIDE / 3/4-16 X 3"	2				
. NS	611330	. STUD 3/4-16 X 3 7/8"	1				
. NS	611331	. STUD / CURBSIDE / 3/4-16 X 4 1/4"	2				
. NS	611332	. STUD 1/2-20 X 1 7/8	16				
	611329	KIT, RETROFIT INDE FRONT AXLE / UNITISED		1	1	1	
. NS	611334	. KNUCKLE L.H. / W/PARALLEL KING PIN ONLY W/RETROFIT UNITISED		1	1	1	
. NS	611335	. KNUCKLE R.H. / W/PARALLEL KING PIN ONLY W/RETROFIT UNITISED		1	1	1	
. NS	611949	. HUB NUT 1 3/4-8		2	2	2	
. NS	611948	. THRUST WASHER		2	2	2	
. NS	611955	. SCREW CAP HEXF M14-1.5x78 G12.9 N500		28	28	28	
. NS	611301	. HUB FLANGE		2	2	2	
. NS	611303	. HUB ASSY / UNITISED L.H. & R.H. "TIMKEN"		2	2	2	
. NS	611300	. ROTOR VENTED		2	2	2	
. NS	611166	. STUD 3/4-16 X 3 1/4"		2	2	2	
. NS	611167	. STUD 3/4-16 X 4 1/2"		3	3	3	
. NS	611331	. STUD / CURBSIDE / 3/4-16 X 4 1/4"		2	2	2	
. NS	611332	. STUD 1/2-20 X 1 7/8		16	16	16	
1	611949	HUB NUT 1 3/4-8	2	2	2	2	
2	611948	THRUST WASHER	2	2	2	2	
3	611955	SCREW CAP HEXF M14-1.5x78 G12.9 N500	28	28	28	28	S
4	611301	HUB FLANGE	2	2	2	2	
5	611953	HUB ASSY / UNITISED L.H. & R.H. "TIMKEN"	2				R S
5	611471	HUB ASSY / UNITISED L.H. & R.H. "FAG" ASSY W/"ABS" RING	2				R S
. NS	N.S.S.	. TOOTH WHEEL	1				1 R S
. NS	509939	. SCREW DRV RND #4x1/4 SS	3				R S
5	611303	HUB ASSY / UNITISED L.H. & R.H. "TIMKEN"		2	2	2	I S
5	611474	HUB ASSY / UNITISED L.H. & R.H. "FAG" ASSY W/"ABS" RING		2	2	2	I S
. NS	611472	. HUB ASSY / UNITISED L.H. & R.H. "FAG"		1	1	1	I S

From Y-7046 To 3-8164		Date:07/2024	PAGE:Y2-1300-99

HUB & ROTOR - FRONT AXLE MODEL "S84U" & "NDIFS80P"

Item#	Part	Description	XLII 45	XLII MTH40	XLII MTH45	XLII MTH45E	NOTES
. NS	611473	. TOOTH WHEEL / FRONT AXLE & TAG W/ "FAG" 143.90MM I.D.		1	1	1	I S
NS	491115	TOOL, HUB INSTALLER W/UNITISED BEARING / 70MM	AR	AR	AR	AR	
. NS	NDS8	. MAINTENANCE INSTRUCTION	1	1	1	1	
6	611044	WASHER FL HARD 21.0x37.0x3.0 N500	12	12	12	12	
7	5001529	SCREW CAP HEX M20-1.5x60 G10.9 G500	12	12	12	12	
11	612384	BUSHING / ABS SENSOR	1	1	1	1	
12	611304	TOOTH WHEEL / FRONT AXLE W/ "TIMKEN" 138.89MM I.D.		1	1	1	I
12	611473	TOOTH WHEEL / FRONT AXLE & TAG W/ "FAG" 143.90MM I.D.		1	1	1	I D
13	N.S.S.	TOOTH WHEEL / FRONT AXLE RIGID INCLUDE WITH ITEM #5	1				1 R
14	110786	BRAKE WEAR INDICATOR MECHANICAL / 44MM	AR	AR	AR	AR	
20	20434082	NUT R.H. / W/HUB-MOUNT WHEEL M22-1.5 / 27 MM TH	10	10	10	10	
21	611207	STUD / R.H. / W/HUB-MOUNT WHEEL M22-1.5 x 81MM	10	10	10	10	
22	611300	ROTOR VENTED	2	2	2	2	
23	641096	CLIP, SPRING / TO FIX SENSOR	1	1	1	1	
		REMOVED FROM YOUR VEHICLE					
25	611039	CALIPER MOUNTING BRACKET L.H. & R.H.	1	1	1	1	
26	611030	STUD 1/2-20 X 1 11/16"	AR	AR	AR	AR	
27	5007001	NUT HEX STO 1/2-20 Z050 G "C"	AR	AR	AR	AR	
30	**Y2-1225-00**	**BRAKE PARTS - FRONT AXLE - W/"KNORR-BREMSE" / SB7 SERIES**					
30	**Y2-1225-01**	**BRAKE PARTS "KNORR-BREMSE" SN7 SERIES**					
30	**Y2-1225-02**	**BRAKE PARTS "KNORR-BREMSE" SN7 SERIES W/NEW SLIDE PINS**					
31	**Y2-1225-10**	**BRAKE CHAMBER - FRONT AXLE TYPE 22**					
31	**Y2-1225-11**	**BRAKE CHAMBER - FRONT AXLE TYPE 24**					
32	611289	KNUCKLE L.H. STREET SIDE	1	1	1	1	R
32	611290	KNUCKLE R.H. CURBSIDE	1	1	1	1	R
33	611334	KNUCKLE L.H. / W/PARALLEL KING PIN ONLY W/RETROFIT UNITISED		1	1	1	I
33	611335	KNUCKLE R.H. / W/PARALLEL KING PIN ONLY W/RETROFIT UNITISED		1	1	1	I
NS	MI08-04	SEE MAINTENANCE INFORMATION	1	1	1	1	
		D) WITH HUB "FAG" ONLY					
		I) WITH INDEPENDENT SUSPENSION					
		R) WITH I BEAM RIGID SUSPENSION					
		S) INSPECTED ALL BOLTS FOR DAMAGE TO THE THREAD AND ON THE SURFACE BELOW THE HEAD WHEN YOU DISASSEMBLED OR UNSCREWED THE HUB AND REPLACE IF NECESSARY					
		1) NOT SOLD SEPARATELY					
		1) NOT SOLD SEPARATELY					

From Y-7046 To 8-9339		Date:07/2024	PAGE:Y2-1305-00
HUB & ROTOR - DRIVE AXLE			

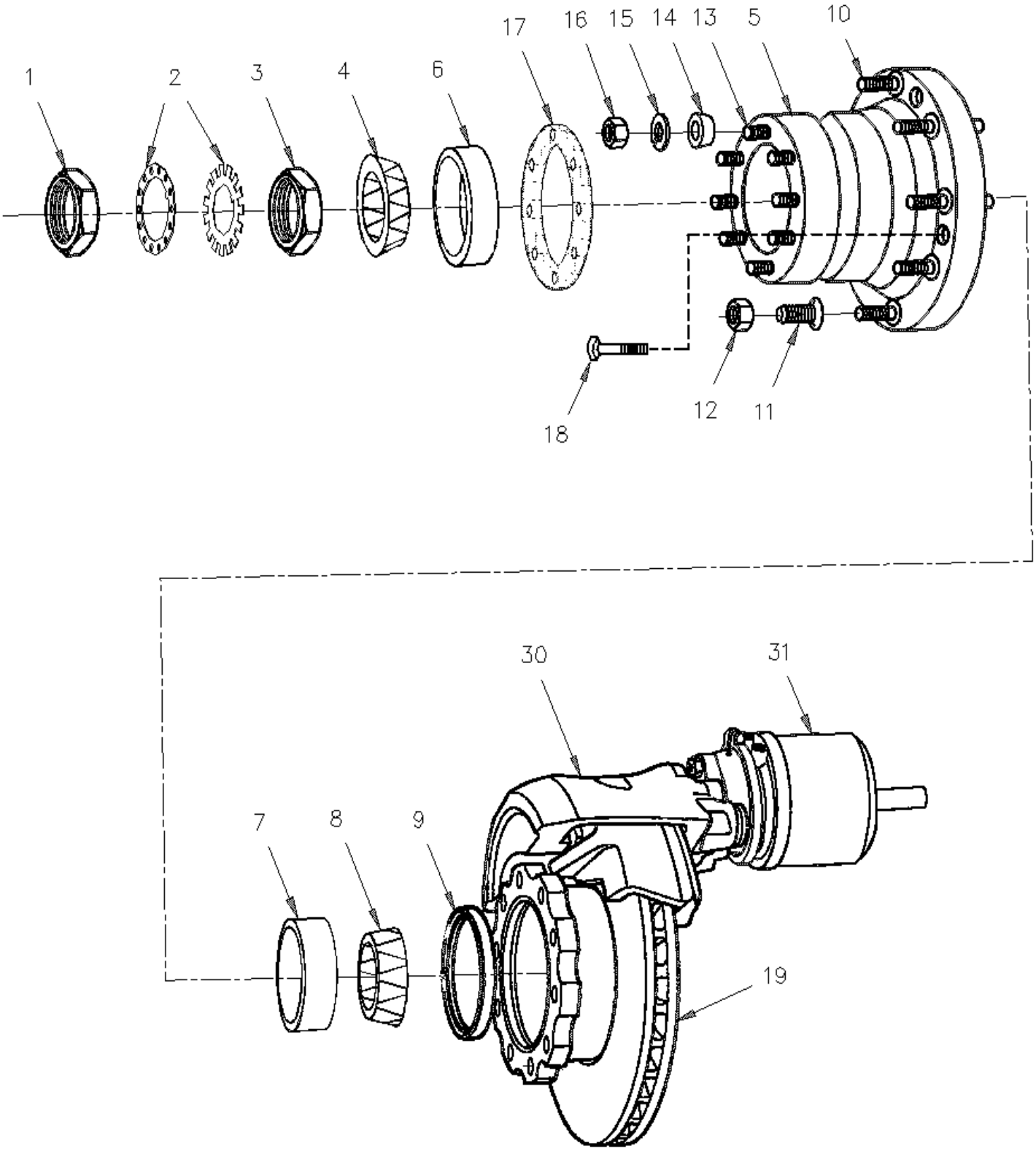

From Y-7046 To 8-9339		Date:07/2024	PAGE:Y2-1305-00

HUB & ROTOR - DRIVE AXLE

Item#	Part	Description	XLII 45	XLII MTH40	XLII MTH45	XLII MTH45E	NOTES
1	620275	NUT OUTER / WHEEL BEARING	1	1	1	1	
2	621624	WASHER LOCK / KIT	1	1	1	1	
3	620279	NUT INNER / WHEEL BEARING	1	1	1	1	
4	620034	CONE BEARING / OUTER WHEEL BEARING	1	1	1	1	A
5	621617	HUB & CUPS ASSY	2	2	2	2	
6	620032	. CUP BEARING	1	1	1	1	A
7	621210	. CUP BEARING	1	1	1	1	B
8	621209	CONE BEARING	1	1	1	1	B
9	621623	SEAL OIL	1	1	1	1	
9	621916	SEAL OIL	1	1	1	1	
10	621634	STUD / L.H. / W/STUD-MOUNT WHEEL	10	10	10	10	
10	621633	STUD / R.H. / W/STUD-MOUNT WHEEL	10	10	10	10	
10	621645	STUD / R.H. / W/HUB-MOUNT WHEEL M22-1.5 x 100 MM	10	10	10	10	
10	621686	STUD / R.H. / W/HUB-MOUNT WHEEL M22-1.5 x 110 MM	AR	AR	AR	AR	D
10	621689	STUD / R.H. / W/HUB-MOUNT WHEEL 7/8-14x4.32" To 2-7715	AR	AR	AR	AR	C
11	610961	NUT R.H. INNER / W/STEEL INSIDE & ALUM. OUTSI	10	10	10	10	
11	610962	NUT L.H. INNER / W/STEEL INSIDE & ALUM. OUTSI	10	10	10	10	
11	611192	NUT R.H. INNER / W/2 ALUMINUM WHEEL	10	10	10	10	
11	611191	NUT L.H. INNER / W/2 ALUMINUM WHEEL	10	10	10	10	
11	620250	NUT R.H. INNER / W/2 STEEL WHEEL	10	10	10	10	
11	620251	NUT L.H. INNER / W/2 STEEL WHEEL	10	10	10	10	
12	610175	NUT L.H. 1 1/8-16 / STUD MOUNT WHEEL	10	10	10	10	
12	610176	NUT R.H. 1 1/8-16 / STUD MOUNT WHEEL	10	10	10	10	
12	611189	NUT R.H. / W/HUB-MOUNT WHEEL M22-1.5 / 30MM TH To 3-8128	10	10	10	10	
12	20434082	NUT R.H. / W/HUB-MOUNT WHEEL M22-1.5 / 27 MM TH From 3-8129	10	10	10	10	
12	610774	NUT R.H. / W/HUB-MOUNT WHEEL 7/8-14 To 2-7715	AR	AR	AR	AR	C
13	621730	STUD / 5/8-11x 5/8-18 x 2 7/8"	8	8	8	8	
14	621627	DOWEL 5/8" I.D.	8	8	8	8	
15	5001518	WASHER LO EXT .625x1.070x.055 ZP	8	8	8	8	
16	500723	NUT HEX 5/8-18 ZP	8	8	8	8	
17	620351	GASKET / AXLE SHAFT W/8 STUDS	AR	AR	AR	AR	
18	621628	SCREW CAP HEXS 5/8-18x1 3/4 GR8	10	10	10	10	
19	621672	ROTOR SOLID (W/TOOTH WHEEL / DRIVE AXLE)	1	1	1	1	
19	611457	ROTOR VENTED (W/TOOTH WHEEL / DRIVE AXLE)	1	1	1	1	
30	**Y2-1235-00**	**BRAKE PARTS - DRIVE AXLE "MERITOR" W/DISCS / SB7 SERIES To 7-9159**					
30	**Y2-1225-01**	**BRAKE PARTS "KNORR-BREMSE" SN7 SERIES From 7-9160**					
31	**Y2-1235-10**	**BRAKE CHAMBER - DRIVE AXLE "KNORR-BREMSE"**					
32	**Y2-1235-00**	**BRAKE PARTS - DRIVE AXLE "MERITOR" W/DISCS / SB7 SERIES**					
NS	621652	KIT, CUP & CONE	1	1	1	1	
NS	621653	KIT, CUP & CONE	1	1	1	1	
NS	684646	SEAL INSTALLER TOOL / DRIVE W/DISC	1	1	1	1	
NS	**Y2-1305-99**	**ROTOR (SPLINED DISC) PRODUCT IMPROVMENT**					

From Y-7046 To 8-9339		Date:07/2024	PAGE:Y2-1305-00

HUB & ROTOR - DRIVE AXLE

Item#	Part	Description	XLII 45	XLII MTH40	XLII MTH45	XLII MTH45E	NOTES
		A) ALSO AVAILABLE IN KIT #621652					
		B) ALSO AVAILABLE IN KIT #621653					
		C) CUSTOMMER SPECIAL "OPTION"					
		D) WITH 2 ALUMINUM WHEELS					

From Y-7046 To 8-9339		Date:07/2024	PAGE:Y2-1305-99
ROTOR (SPLINED DISC) PRODUCT IMPROVMENT			

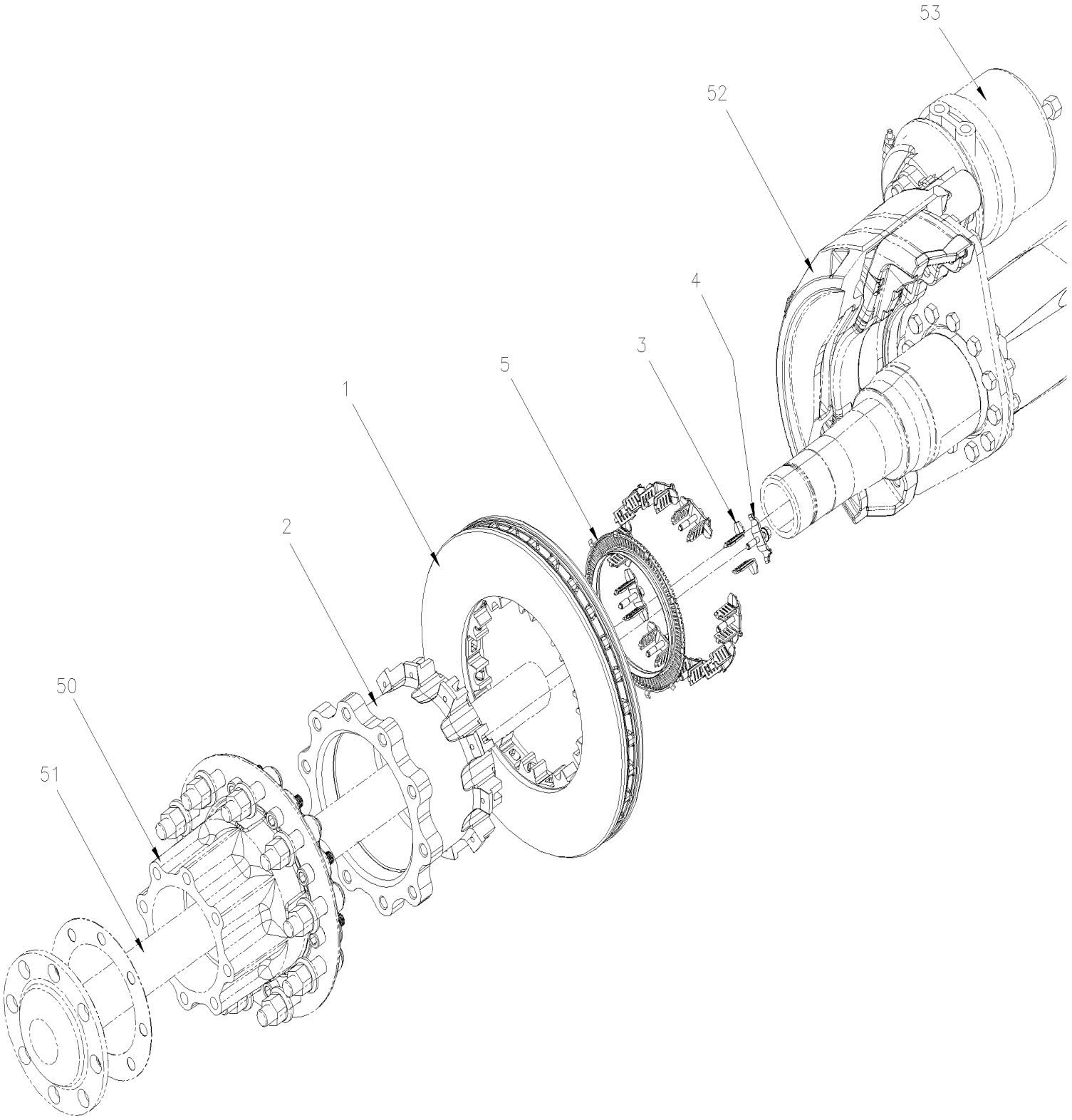

From Y-7046 To 8-9339		Date:07/2024	PAGE:Y2-1305-99

ROTOR (SPLINED DISC) PRODUCT IMPROVMENT

Item#	Part	Description	XLII 45	XLII MTH40	XLII MTH45	XLII MTH45E	NOTES
	144982	KIT SPLINED BRAKE DISC ON DRIVE AXLE	1	1	1	1	
. NS	IS-09085	. SEE INSTRUCTION SHEET	1	1	1	1	
1	144984	. ROTOR / "SPLINED DISC"	1	1	1	1	
2	144983	. ROTOR ADAPTOR / "SPLINED DISC"	1	1	1	1	
3	144986	. PIECE INTERMEDIATE / "SPLINED DISC"	20	20	20	20	
4	144985	. SPRING ELEMENT / "SPLINED DISC"	10	10	10	10	
5	124921	. TOOTH WHEEL / DRIVE AXLE / "SPLINED DISC"	1	1	1	1	
NS	680754	GREASE, ANTI-SEIZE PERMATEX COPPER (454GR)	AR	AR	AR	AR	
50	**Y2-1305-00**	**HUB & ROTOR - DRIVE AXLE**					
51	**Y2-1105-00**	**REAR AXLE - MODEL "RC23160"**					
52	**Y2-1235-00**	**BRAKE PARTS - DRIVE AXLE "MERITOR" W/DISCS / SB7 SERIES**					
52	**Y2-1225-01**	**BRAKE PARTS "KNORR-BREMSE" SN7 SERIES**	1	1	1	1	
53	**Y2-1235-10**	**BRAKE CHAMBER - DRIVE AXLE "KNORR-BREMSE"**					

From Y-7046 To 3-8164		Date:07/2024	PAGE:Y2-1310-00
HUB & ROTOR - TAG AXLE TYPE TS6			

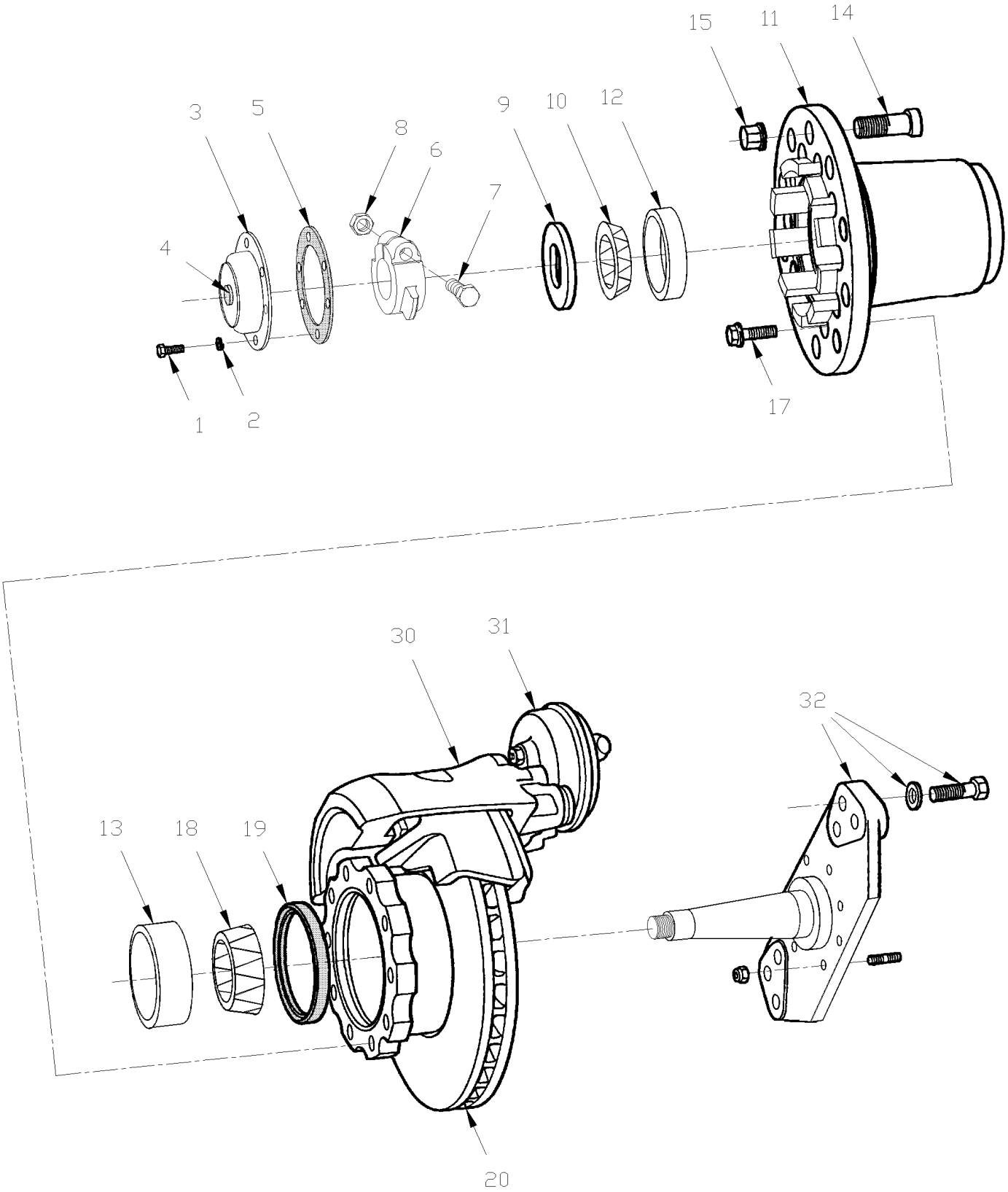

From Y-7046 To 3-8164		Date:07/2024	PAGE:Y2-1310-00

HUB & ROTOR - TAG AXLE TYPE TS6

Item#	Part	Description	XLII 45	XLII MTH40	XLII MTH45	XLII MTH45E	NOTES
1	502790	SCREW CAP HEX M8-1.25x20 G8.8 Z050	6	6	6	6	
2	5001003	WASHER LO SPT 8.1x12.7x2.0 Z050	6	6	6	6	
3	611243	HUB CAP / W/GREASE ONLY	1				
3	611210	HUB CAP / ALUMINUM / "STEMCO"	1	1	1	1	
. NS	MI07-04	. SEE MAINTENANCE INFORMATION	1	1	1	1	
4	611211	. KIT, HUB CAP WINDOW	1	1	1	1	
4	611242	. PLUG VENT / RED / W/ALU HUB CAP "STEMCO"	1	1	1	1	
5	611261	. GASKET HUB CAP / "STEMCO"	1	1	1	1	
6	611217	NUT ADJUSTING / 1"3/8-12	1	1	1	1	
. NS	490912	. TOOL / NUT WHEEL BEARING ADJUSTMENT	1	1	1	1	
. NS	684734	. TOOL / NUT WHEEL BEARING ADJUSTMENT / TORQUE	1	1	1	1	
. NS	MI03-24	. SEE MAINTENANCE INFORMATION	1	1	1	1	
7	500052	SCREW CAP HEX 3/8-24x2 G5 ZP	1	1	1	1	
8	500704	NUT HEX STO 3/8-24 Z050	1	1	1	1	
9	611218	WASHER / "D" BEARING	1	1	1	1	
10	611219	CONE BEARING / OUTER WHEEL BEARING	1	1	1	1	A
11	611215	HUB WHEEL / W/STANDARD WHEEL To 2-7766	1	1	1	1	
11	611260	HUB WHEEL / W/METRIC WHEEL From 2-7767	1	1	1	1	
12	611221	CUP BEARING / OUTER WHEEL BEARING	1	1	1	1	A
13	611220	CUP BEARING / INNER WHEEL BEARING	1	1	1	1	B
14	610996	STUD / R.H. / W/STUD-MOUNT WHEEL	10	10	10	10	
14	610995	STUD / L.H. / W/STUD-MOUNT WHEEL	10	10	10	10	
14	611207	STUD / R.H. / W/HUB-MOUNT WHEEL M22-1.5 x 81MM	10	10	10	10	
14	611208	STUD / R.H. / W/HUB-MOUNT WHEEL 7/8-14	10	10	10	10	C
15	610175	NUT L.H. 1 1/8-16 / STUD MOUNT WHEEL	10	10	10	10	
15	610176	NUT R.H. 1 1/8-16 / STUD MOUNT WHEEL	10	10	10	10	
15	611189	NUT R.H. / W/HUB-MOUNT WHEEL M22-1.5 / 30MM TH To 3-8128	10	10	10	10	
15	20434082	NUT R.H. / W/HUB-MOUNT WHEEL M22-1.5 / 27 MM TH From 3-8129	10	10	10	10	
15	610773	NUT R.H. / W/HUB-MOUNT WHEEL 7/8-14	10	10	10	10	C
17	611007	SCREW CAP HEXF SERR M16-1.5x50 G10.9	10	10	10	10	
18	611222	CONE BEARING / INNER WHEEL BEARING	1	1	1	1	B
19	611081	SEAL ASSY/ WHEEL BEARING W/OIL	1	1	1	1	
19	611247	SEAL ASSY/ WHEEL BEARING W/OIL	1	1	1	1	
19	611174	SEAL ASSY / W/OIL / "SCOTT-SEAL PLUS"	AR	AR	AR	AR	
20	611188	ROTOR SOLID	1	1	1	1	
20	611456	ROTOR VENTED	1	1	1	1	
30	**Y2-1245-00**	**BRAKE PARTS - TAG AXLE - W/"KNORR-BREMSE" / SB7 SERIES**					
31	**Y2-1245-10**	**BRAKE CHAMBER - TAG AXLE TYPE 16/16**					
32	**Y2-1245-00**	**BRAKE PARTS - TAG AXLE - W/"KNORR-BREMSE" / SB7 SERIES**					
NS	684645	SEAL INSTALLER TOOL / TAG TS-6	1	1	1	1	
41	611327	KIT, RETROFIT TAG AXLE / UNITISED TS8U To 3-8164	1	1	1	1	
. NS	611302	. SPINDLE / WITH MODEL "G.K.N." (TS8U UNITISED) To 3-8164	2	2	2	2	

From Y-7046 To 3-8164		Date:07/2024	PAGE:Y2-1310-00

HUB & ROTOR - TAG AXLE TYPE TS6

Item#	Part	Description	XLII 45	XLII MTH40	XLII MTH45	XLII MTH45E	NOTES
. NS	611949	. HUB NUT 1 3/4-8 To 3-8164	2	2	2	2	
. NS	611948	. THRUST WASHER To 3-8164	2	2	2	2	
. NS	611955	. SCREW CAP HEXF M14-1.5x78 G12.9 N500 To 3-8164	28	28	28	28	
. NS	611301	. HUB FLANGE To 3-8164	2	2	2	2	
. NS	611953	. HUB ASSY / UNITISED L.H. & R.H. "TIMKEN" To 3-8164	2	2	2	2	
. NS	611300	. ROTOR VENTED To 3-8164	2	2	2	2	
. NS	500781	. NUT HEX STO M16-2.0 DP To 3-8164	16	16	16	16	
. NS	N.P.N.	. WASHER To 3-8164	16	16	16	16	4
		A) THIS CUP & CONE SOLD ONLY IN KIT #611228					
		B) THIS CUP & CONE SOLD ONLY IN KIT #611227					
		C) CUSTOM SPECIAL "OPTION"					
		4) NO PARTS NUMBER					

From 4-8165 To 8-9339		Date:07/2024	PAGE:Y2-1310-01
HUB & ROTOR - TAG AXLE TYPE TS8U			

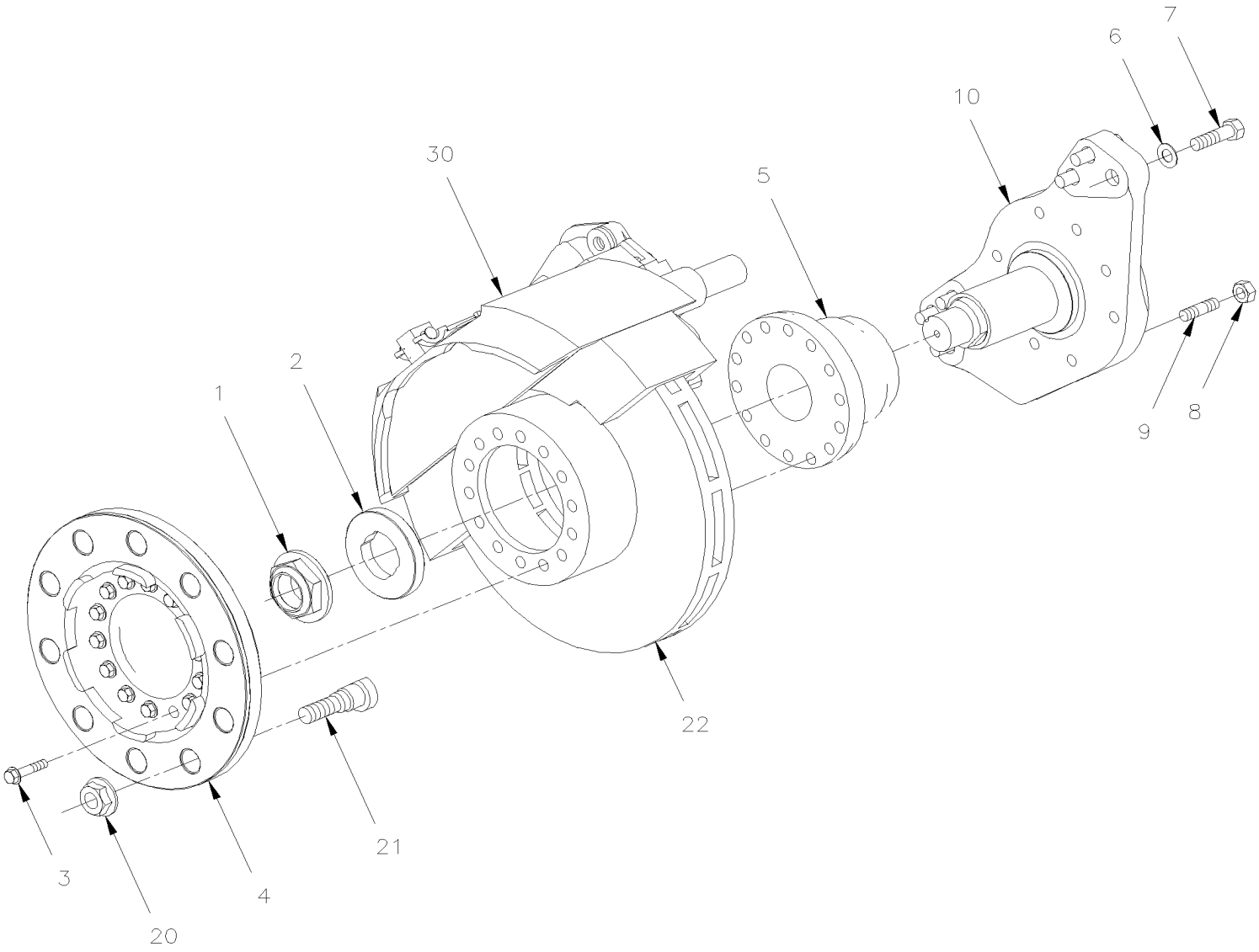

From 4-8165 To 8-9339		Date:07/2024	PAGE:Y2-1310-01

HUB & ROTOR - TAG AXLE TYPE TS8U

Item#	Part	Description	XLII 45	XLII MTH40	XLII MTH45	XLII MTH45E	NOTES
1	611949	HUB NUT 1 3/4-8	1	1	1	1	
2	611948	THRUST WASHER	1	1	1	1	
3	611955	SCREW CAP HEXF M14-1.5x78 G12.9 N500	14	14	14	14	S
4	611301	HUB FLANGE	1	1	1	1	
5	611953	HUB ASSY / UNITISED L.H. & R.H. "TIMKEN"	1	1	1	1	S
5	611471	HUB ASSY / UNITISED L.H. & R.H. "FAG" ASSY W/"ABS" RING SERVICE	1	1	1	1	S
. NS	N.S.S.	. TOOTH WHEEL	1	1	1	1	1 S
. NS	509939	. SCREW DRV RND #4x1/4 SS	3	3	3	3	S
NS	491115	TOOL, HUB INSTALLER W/UNITISED BEARING / 70MM	1	1	1	1	
. NS	NDS8	. MAINTENANCE INSTRUCTION	1	1	1	1	
6	611044	WASHER FL HARD 21.0x37.0x3.0 N500	1	1	1	1	
7	5001193	SCREW CAP HEX M20-2.5x65 G10.9 ZP To 7-9159	6	6	6	6	
8	502588	NUT HEX M16-2.0 ZP	8	8	8	8	
NS	502584	WASHER LO SERR 8.2x26.3x1.8 Z050	8	8	8	8	
9	611048	STUD / M16-2.0 x 60MM	8	8	8	8	
10	611302	SPINDLE / WITH MODEL "G.K.N." (TS8U UNITISED)	1	1	1	1	
20	20434082	NUT R.H. / W/HUB-MOUNT WHEEL M22-1.5 / 27 MM TH	10	10	10	10	
21	611207	STUD / R.H. / W/HUB-MOUNT WHEEL M22-1.5 x 81MM	10	10	10	10	
22	611300	ROTOR VENTED	10	10	10	10	
30	**Y2-1245-00**	**BRAKE PARTS - TAG AXLE - W/"KNORR-BREMSE" / SB7 SERIES To 7-9159**					
30	**Y2-1225-01**	**BRAKE PARTS "KNORR-BREMSE" SN7 SERIES From 7-9160**					
30	**Y2-1225-02**	**BRAKE PARTS "KNORR-BREMSE" SN7 SERIES W/NEW SLIDE PINS**					
NS	MI08-04	SEE MAINTENANCE INFORMATION	1	1	1	1	
		S) REPLACED ALL BOLTS EACH TIME WHEN YOU DISASSEMBLED OR UNSCREWED THE HUB					
		1) NOT SOLD SEPARATELY					

From Y-7046 To 3-8164		Date:07/2024	PAGE:Y2-1310-99
HUB & ROTOR - TAG AXLE TYPE TS8U RETROFIT "UNITISED" BEARING			

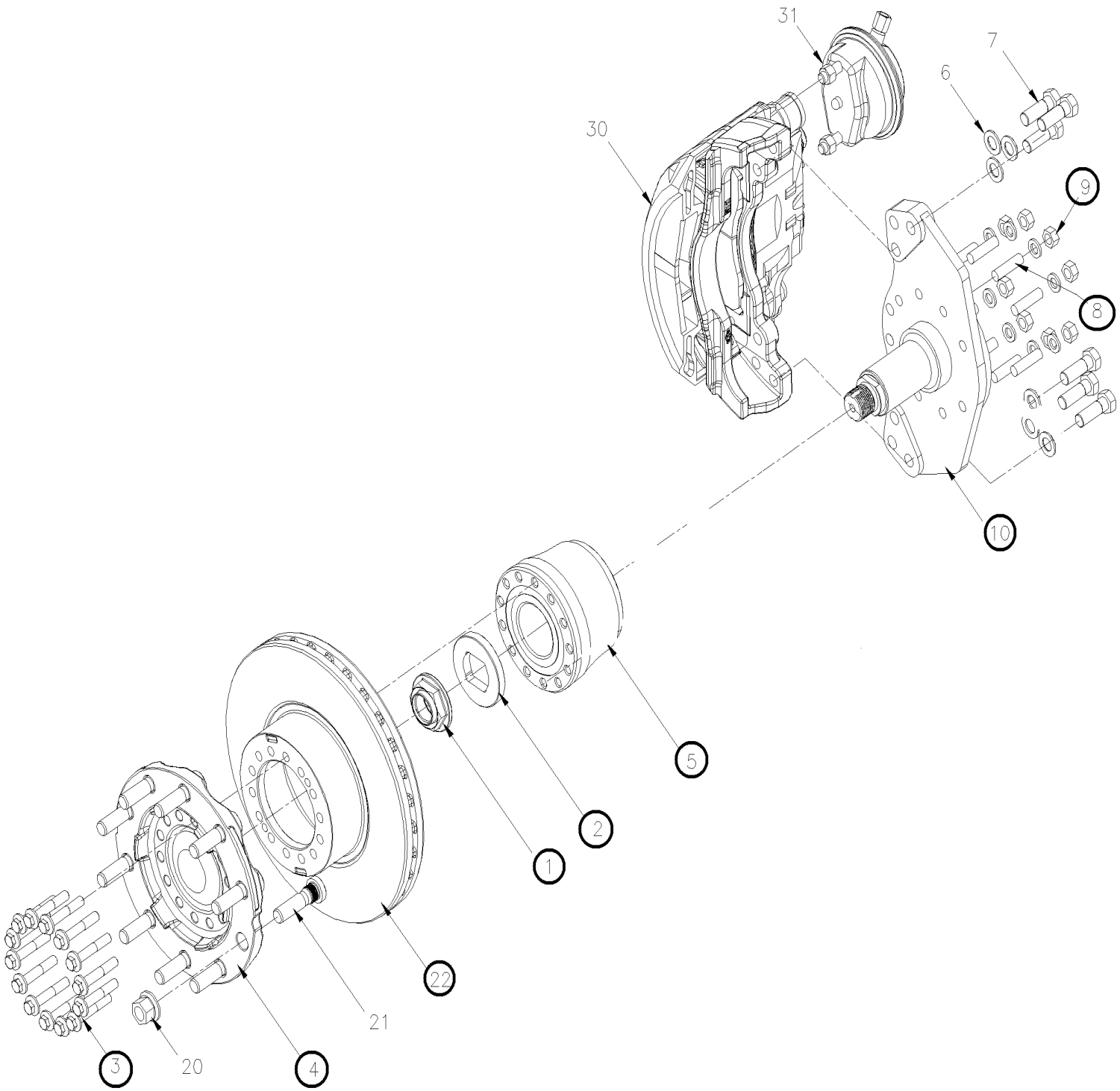

From Y-7046 To 3-8164		Date:07/2024	PAGE:Y2-1310-99

HUB & ROTOR - TAG AXLE TYPE TS8U RETROFIT "UNITISED" BEARING

Item#	Part	Description	XLII 45	XLII MTH40	XLII MTH45	XLII MTH45E	NOTES
		. . . . . "WARNING" - "WARNING" - "WARNING"					
		THIS KIT DO NOT INCLUDE CALIPERS & BRAKE CHAMBER					
		KIT INCLUDE PARTS W/GREEN SPOT W/CIRCLE					
	611327	KIT, RETROFIT TAG AXLE / UNITISED TS8U	1	1	1	1	
. NS	611302	. SPINDLE / WITH MODEL "G.K.N." (TS8U UNITISED)	2	2	2	2	
. NS	611949	. HUB NUT 1 3/4-8	2	2	2	2	
. NS	611948	. THRUST WASHER	2	2	2	2	
. NS	611955	. SCREW CAP HEXF M14-1.5x78 G12.9 N500	28	28	28	28	
. NS	611301	. HUB FLANGE	2	2	2	2	
. NS	611953	. HUB ASSY / UNITISED L.H. & R.H. "TIMKEN"	2	2	2	2	
. NS	611300	. ROTOR VENTED	2	2	2	2	
. NS	500781	. NUT HEX STO M16-2.0 DP	16	16	16	16	
. NS	N.P.N.	. WASHER	16	16	16	16	4
1	611949	HUB NUT 1 3/4-8	2	2	2	2	
2	611948	THRUST WASHER	2	2	2	2	
3	611955	SCREW CAP HEXF M14-1.5x78 G12.9 N500	28	28	28	28	S
4	611301	HUB FLANGE	2	2	2	2	
5	611953	HUB ASSY / UNITISED L.H. & R.H. "TIMKEN"	2	2	2	2	S
5	611471	HUB ASSY / UNITISED L.H. & R.H. "FAG" ASSY W/"ABS" RING	2	2	2	2	S
. NS	N.S.S.	. TOOTH WHEEL	1	1	1	1	1 S
. NS	509939	. SCREW DRV RND #4x1/4 SS	3	3	3	3	S
6	611044	WASHER FL HARD 21.0x37.0x3.0 N500	12	12	12	12	
7	5001193	SCREW CAP HEX M20-2.5x65 G10.9 ZP	12	12	12	12	
8	611048	STUD / M16-2.0 x 60MM	16	16	16	16	
NS	502884	WASHER LO SPT 16.2x27.4x3.5 N500	16	16	16	16	
9	502588	NUT HEX M16-2.0 ZP	16	16	16	16	
10	611302	SPINDLE / WITH MODEL "G.K.N." (TS8U UNITISED)	2	2	2	2	
NS	491115	TOOL, HUB INSTALLER W/UNITISED BEARING / 70MM	AR	AR	AR	AR	
. NS	NDS8	. MAINTENANCE INSTRUCTION	1	1	1	1	
20	20434082	NUT R.H. / W/HUB-MOUNT WHEEL M22-1.5 / 27 MM TH	10	10	10	10	
21	611207	STUD / R.H. / W/HUB-MOUNT WHEEL M22-1.5 x 81MM	10	10	10	10	
22	611300	ROTOR VENTED	2	2	2	2	
30	**Y2-1245-00**	**BRAKE PARTS - TAG AXLE - W/"KNORR-BREMSE" / SB7 SERIES**					
30	**Y2-1225-01**	**BRAKE PARTS "KNORR-BREMSE" SN7 SERIES**					
30	**Y2-1225-02**	**BRAKE PARTS "KNORR-BREMSE" SN7 SERIES W/NEW SLIDE PINS**					
31	**Y2-1245-10**	**BRAKE CHAMBER - TAG AXLE TYPE 16/16**					
NS	MI08-04	SEE MAINTENANCE INFORMATION	1	1	1	1	

From Y-7046 To 3-8164		Date:07/2024	PAGE:Y2-1310-99

HUB & ROTOR - TAG AXLE TYPE TS8U RETROFIT "UNITISED" BEARING

Item#	Part	Description	XLII 45	XLII MTH40	XLII MTH45	XLII MTH45E	NOTES
		S) REPLACED ALL BOLTS EACH TIME WHEN YOU DISASSEMBLED OR UNSCREWED THE HUB					
		1) NOT SOLD SEPARATELY					
		4) NO PARTS NUMBER					

From Y-7046 To 2-7766		Date:07/2024	PAGE:Y2-1318-00
WHEELS & COMPONENTS - BUS MOUNT (STANDARD)			

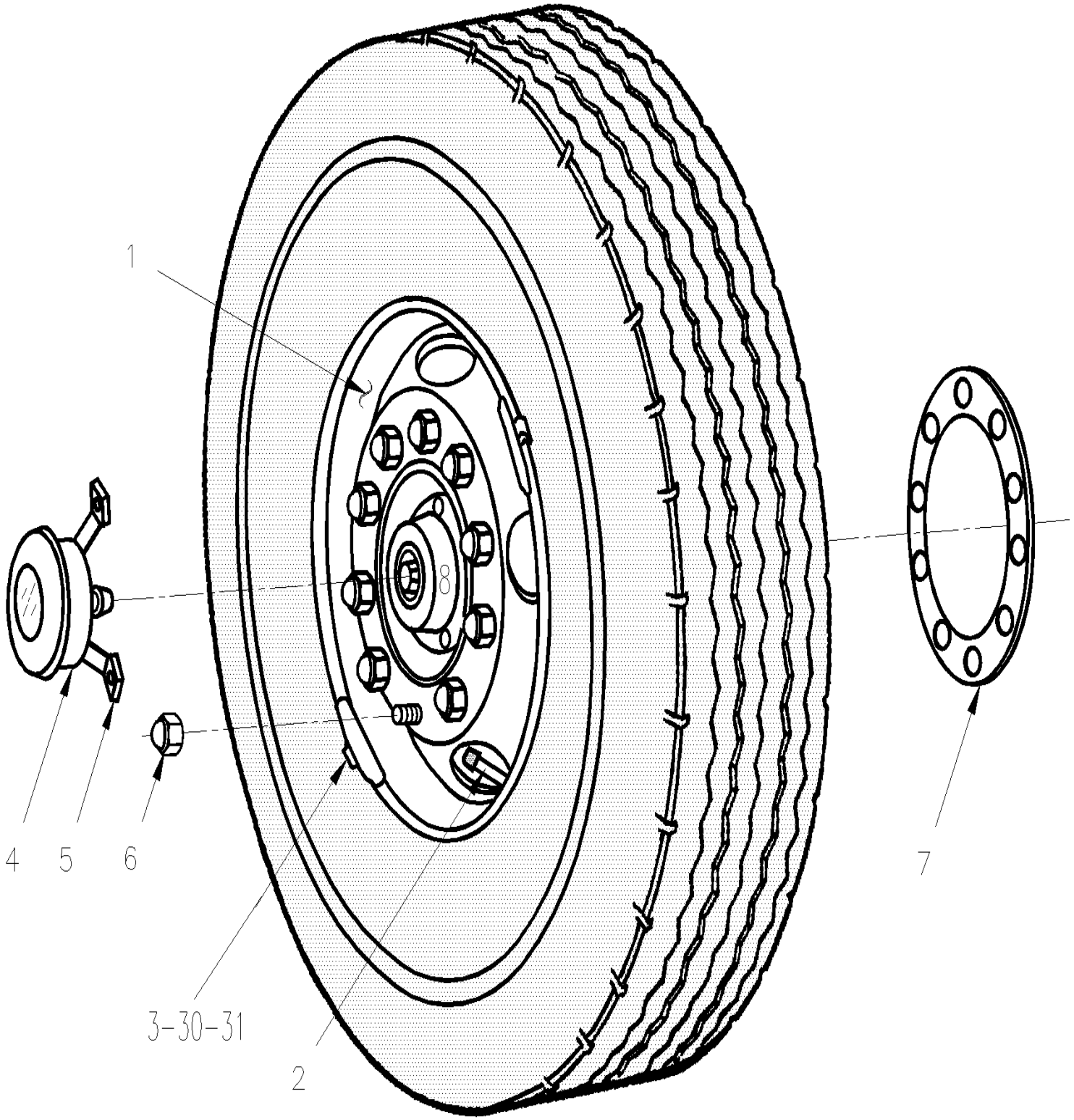

From Y-7046 To 2-7766		Date:07/2024	PAGE:Y2-1318-00
WHEELS & COMPONENTS - BUS MOUNT (STANDARD)			

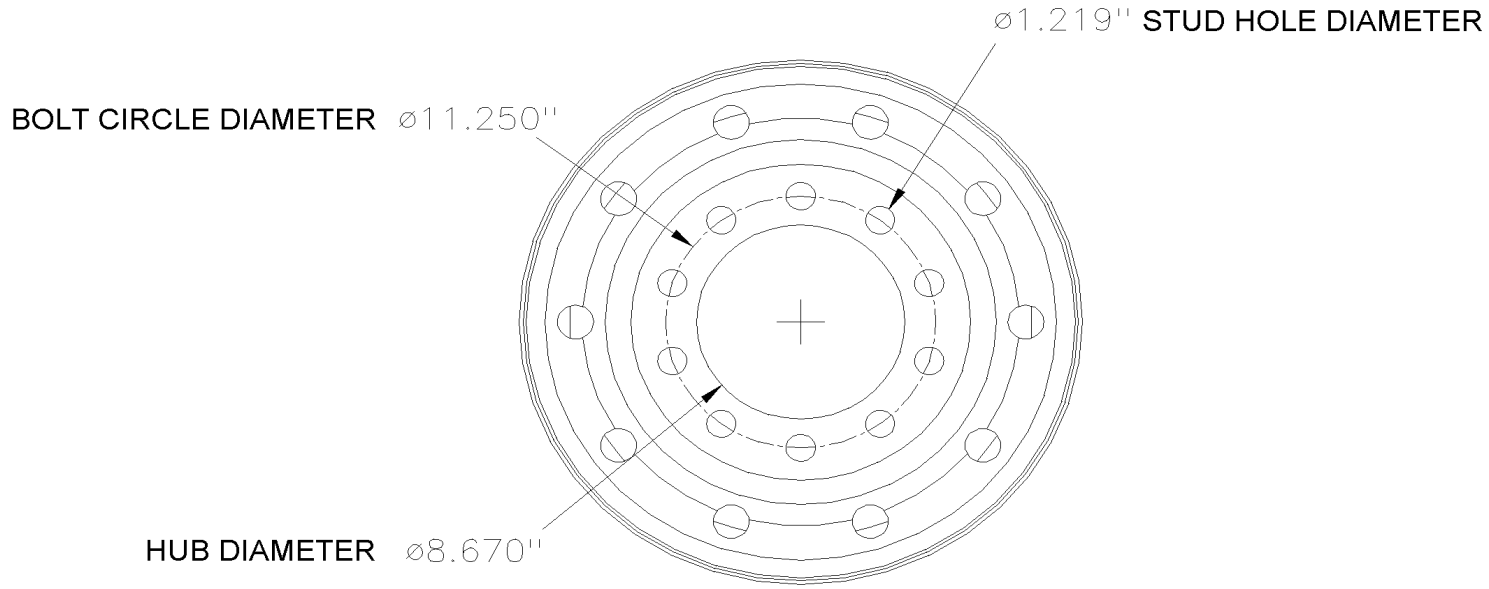

BUS MOUNT STANDARD

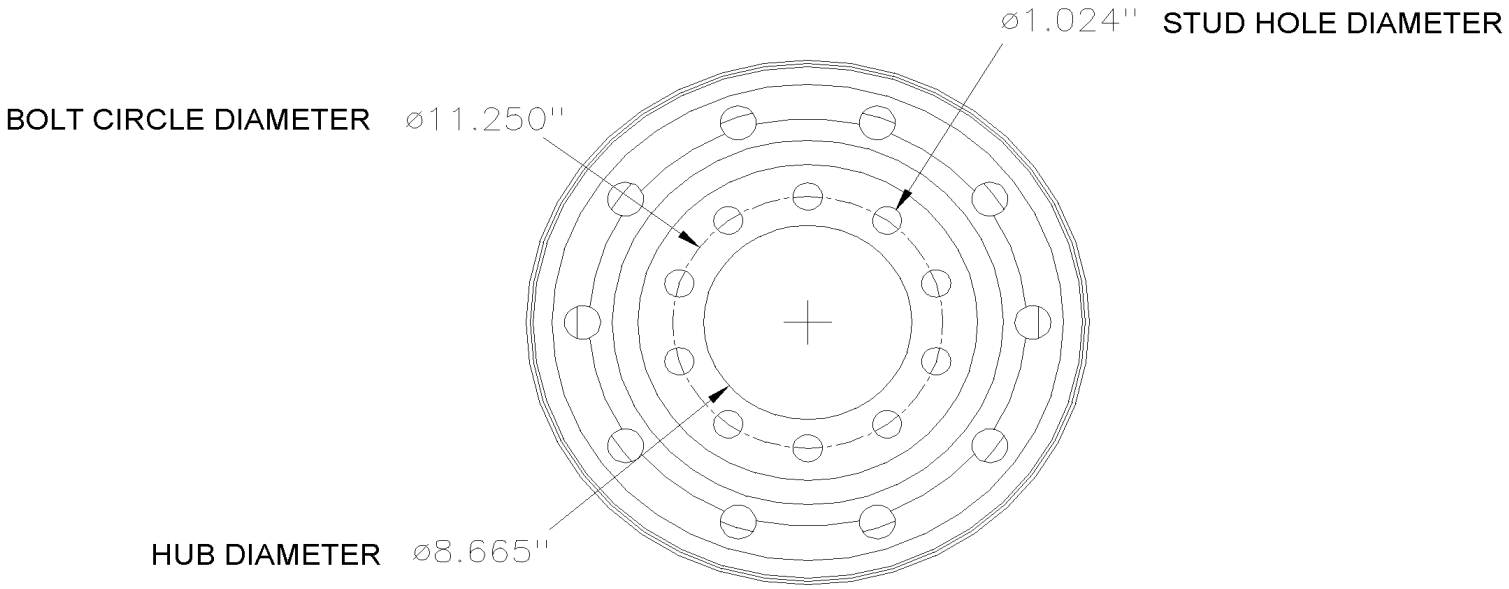

TRUCK MOUNT METRIC

From Y-7046 To 2-7766		Date:07/2024	PAGE:Y2-1318-00

WHEELS & COMPONENTS - BUS MOUNT (STANDARD)

Item#	Part	Description	XLII 45	XLII MTH40	XLII MTH45	XLII MTH45E	NOTES
		STEEL WHEELS / STUD MOUNTED					
1	650170	WHEEL, STEEL STUD 22.5 X 8.25 / WHITE	AR	AR	AR	AR	
1	650372	WHEEL, STEEL STUD 22.5 X 8.25 / GREY / POWDER COAT	AR	AR	AR	AR	
1	650162	WHEEL, STEEL STUD 22.5 X 9.00 / WHITE / 2 HAND HOLE PC	AR	AR	AR	AR	
		STEEL WHELLS / HUB-MOUNTED					
1	650169	WHEEL, STEEL HUB 22.5 X 8.25 / WHITE	AR	AR	AR	AR	
1	650373	WHEEL, STEEL HUB 22.5 X 8.25 / GREY / POWDER COAT	AR	AR	AR	AR	
1	650179	WHEEL, STEEL HUB 22.5 X 9.00 / WHITE	AR	AR	AR	AR	
		ALUMINUM WHELLS / STUD-MOUNTED					
1	650163	WHEEL, ALU. STUD 22.5 X 9.00 / BOTH SIDE POLISH	AR	AR	AR	AR	
1	650190	WHEEL, ALU. STUD 22.5 X 9.00 / INSIDE POLISH	AR	AR	AR	AR	
1	650191	WHEEL, ALU. STUD 22.5 X 9.00 / OUTSIDE POLISH	AR	AR	AR	AR	
		ALUMINUM WHELLS / HUB-MOUNTED					
1	650185	WHEEL, ALU. HUB 22.5 X 9.00 / INSIDE POLISH	AR	AR	AR	AR	
1	650186	WHEEL, ALU. HUB 22.5 X 9.00 / OUTISIDE POLISH	AR	AR	AR	AR	
		VALVES - VALVE EXTENTION & HOLDER					
2	150293	VALVE / W/STEEL WHEEL / "KNORR-BREMSE " BRAKE -	AR	AR	AR	AR	A
2	650154	VALVE / W/ALUMINUM WHEEL / 2.60" LG W/60 deg	AR	AR	AR	AR	
NS	650194	VALVE / W/ALUMINUM WHEEL / 1.38" LG W/60 deg	AR	AR	AR	AR	C
NS	650164	. CAP VALVE / CHROME	AR	AR	AR	AR	
NS	650151	. CAP VALVE / STD	AR	AR	AR	AR	
NS	650151	. CAP VALVE / STD	AR	AR	AR	AR	
NS	650008	. SPRING VALVE	AR	AR	AR	AR	
NS	650205	. SPRING VALVE 21116	AR	AR	AR	AR	
NS	650201	EXTENSION VALVE 1 3/8" LG	AR	AR	AR	AR	
NS	650188	EXTENSION VALVE / 7" LG	AR	AR	AR	AR	
NS	650178	RUBBER HOLDER / 1.5" O.D. / EXTENSION VALVE	AR	AR	AR	AR	
		WEIGHTS					
3	650233	WEIGHT BALANCING / W/STEEL WHEEL / 2 OZ	AR	AR	AR	AR	
3	650232	WEIGHT BALANCING / W/STEEL WHEEL / 3 OZ	AR	AR	AR	AR	

From Y-7046 To 2-7766		Date:07/2024	PAGE:Y2-1318-00

WHEELS & COMPONENTS - BUS MOUNT (STANDARD)

Item#	Part	Description	XLII 45	XLII MTH40	XLII MTH45	XLII MTH45E	NOTES
3	650234	WEIGHT BALANCING / W/STEEL WHEEL / 4 OZ	AR	AR	AR	AR	
3	650235	WEIGHT BALANCING / W/STEEL WHEEL / 6 OZ	AR	AR	AR	AR	
3	650236	WEIGHT BALANCING / W/STEEL WHEEL / 8 OZ	AR	AR	AR	AR	
3	650237	WEIGHT BALANCING / W/STEEL WHEEL / 10 OZ	AR	AR	AR	AR	
3	650238	WEIGHT BALANCING / W/STEEL WHEEL / 12 OZ	AR	AR	AR	AR	
3	650175	WEIGHT BALANCING / W/ALUMINUM WHEEL / INT. & EXT. / 2 OZ	AR	AR	AR	AR	
3	650109	WEIGHT BALANCING / W/ALUMINUM WHEEL / INT. & EXT. / 3 OZ	AR	AR	AR	AR	
3	650110	WEIGHT BALANCING / W/ALUMINUM WHEEL / EXT. ON 4 OZ	AR	AR	AR	AR	
3	650114	WEIGHT BALANCING / W/ALUMINUM WHEEL / INT. ON 4 OZ	AR	AR	AR	AR	
3	650111	WEIGHT BALANCING / W/ALUMINUM WHEEL / EXT. ON 6 OZ	AR	AR	AR	AR	
3	650115	WEIGHT BALANCING / W/ALUMINUM WHEEL / INT. ON 6 OZ	AR	AR	AR	AR	
3	650112	WEIGHT BALANCING / W/ALUMINUM WHEEL / EXT. ON 8 OZ	AR	AR	AR	AR	
3	650116	WEIGHT BALANCING / W/ALUMINUM WHEEL / INT. ON 8 OZ	AR	AR	AR	AR	
3	650192	WEIGHT BALANCING / W/ALUMINUM WHEEL / W/ADHES 6 OZ	AR	AR	AR	AR	
3	650206	WEIGHT BALANCING / POWDER (12 OZ BAG)	AR	AR	AR	AR	
		HUBODOMETER					
4	650002	HUBODOMETER, COMPLETE 11 X 20 & 12 X 22.5 MPH / STEMCO	AR				
4	650117	HUBODOMETER, COMPLETE 11 X 20 & 12 X 22.5 KMH / STEMCO	AR				
4	590216	HUBODOMETER, COMPLETE 11 X 20 & 12 X 22.5 KMH / V.D.O.	AR				
4	650174	HUBODOMETER, COMPLETE / FOR 295/80 KMH	AR				
5	650145	HUBODOMETER BRACKET / W/8 STUDS AXLE SHAFT	AR				
		OTHERS					
6	502823	CAP, PLASTIC CHROME / WHEEL NUT / STUD MOUNT	AR	AR	AR	AR	
6	502223	CAP, PLASTIC WHITE / WHEEL NUT / STUD MOUNT	AR	AR	AR	AR	
6	5001339	CAP, PLASTIC CHROME / WHEEL NUT / HUB MOUNT / PUSH-ON TYPE	AR	AR	AR	AR	
6	502221	CAP, PLASTIC CHROME / WHEEL NUT / HUB MOUNT	20	20	20	20	C
6	5001301	CAP, PLASTIC CHROME / WHEEL NUT / HUB MOUNT	40	40	40	40	D
7	650134	WHEEL GUARD MYLAR / WHEEL & HUB	AR	AR	AR	AR	
8	650224	HUB CAP PLASTIC CHROME W/NUT / STUD MOUNT	4	4	4	4	F
8	650225	HUB CAP PLASTIC CHROME W/NUT / STUD MOUNT	2	2	2	2	G
8	621683	HUB CAP PLASTIC CHROME W/NUT / HUB MOUNT	2	2	2	2	G
8	621673	HUB CAP PLASTIC CHROME W/NUT / STUD MOUNT	2	2	2	2	
NS	683529	CLEANER "ALUMINUM WHEEL" / SPRAY 22 OZ.	AR	AR	AR	AR	
NS	683527	SEALANT "ALLUMINUM WHEEL" / SPRAY 13 OZ.	AR	AR	AR	AR	
NS	683528	POLISH "ALLUMINUM WHEEL" / WAX 16 OZ.	AR	AR	AR	AR	
		VALVES - WITH TIRE PRESSURE SENSOR					

From Y-7046 To 2-7766		Date:07/2024	PAGE:Y2-1318-00

WHEELS & COMPONENTS - BUS MOUNT (STANDARD)

Item#	Part	Description	XLII 45	XLII MTH40	XLII MTH45	XLII MTH45E	NOTES
30	066446	DECAL / "WARNING DETECTOR INSIDE" / ENGLISH & FRANCAIS	AR	AR	AR	AR	
30	066445	DECAL / "WARNING DETECTOR INSIDE" / ENGLISH	AR	AR	AR	AR	
31	**Y2-1318-99**	**TIRE MONITOR - PRESSURE & TEMPERATURE / "RETROFIT"**					
NS	MI03-26A	SEE MAINTENANCE INFORMATION	1	1	1	1	
		A) USE THIS VALVE W/ALLS STEEL WHEELS, MOUNTED W/"KNORR-BREMSE" BRAKE SYSTEM					
		C) TO USE WITH NUT 3/8"X 1"½ THICK (610774) DRIVE AXLE					
		D) TO USE WITH NUT 29/32" X 1"½ THICK (610773) / FRONT & TAG AXLE					
		F) TO USE WITH FRONT & TAG WHEEL					
		G) TO USE WITH DRIVE AXLE WHEEL					

From 2-7767 To 8-9339		Date:07/2024	PAGE:Y2-1318-01
WHEELS & COMPONENTS - TRUCK MOUNT (METRIC)			

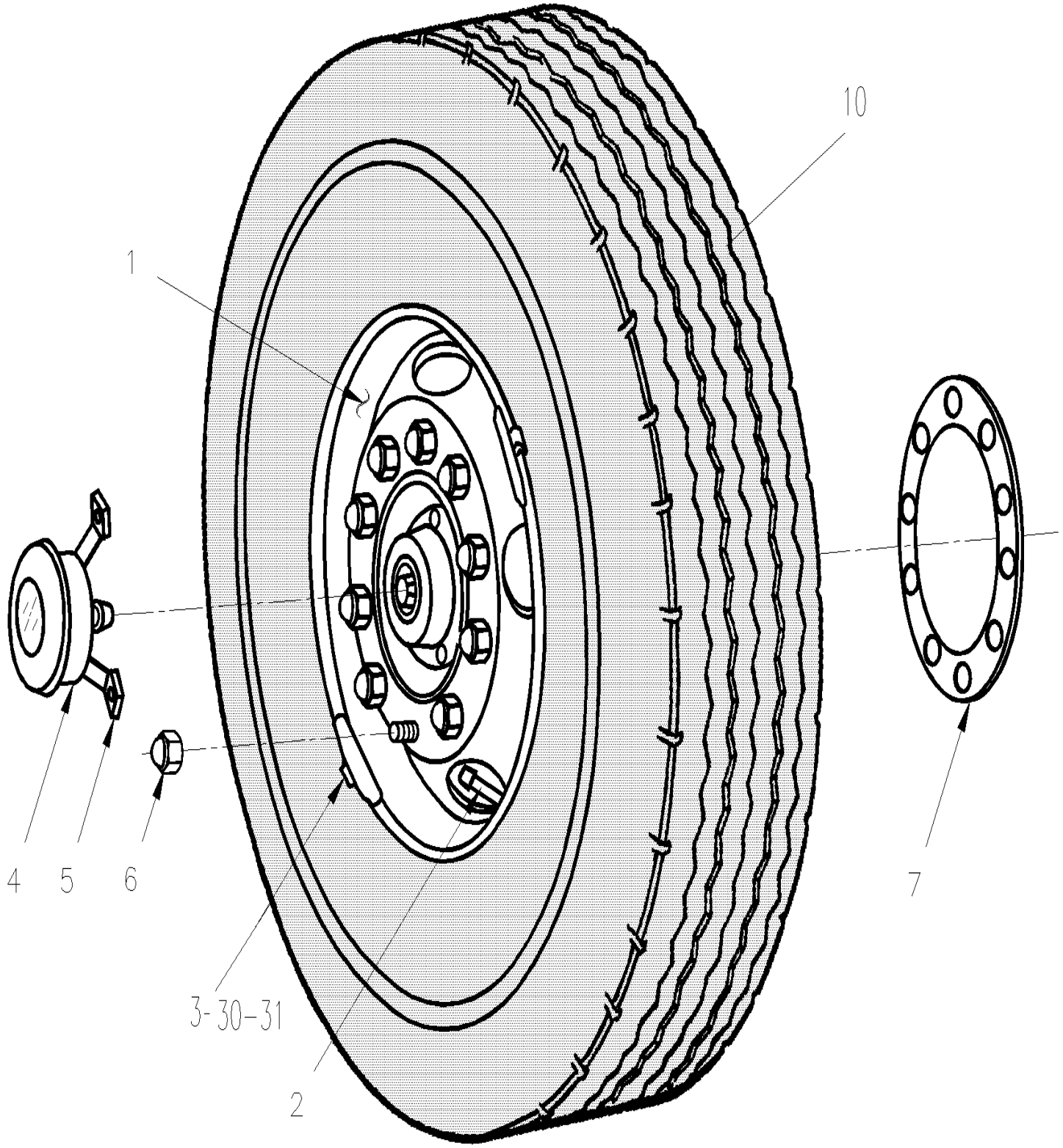

From 2-7767 To 8-9339		Date:07/2024	PAGE:Y2-1318-01
WHEELS & COMPONENTS - TRUCK MOUNT (METRIC)			

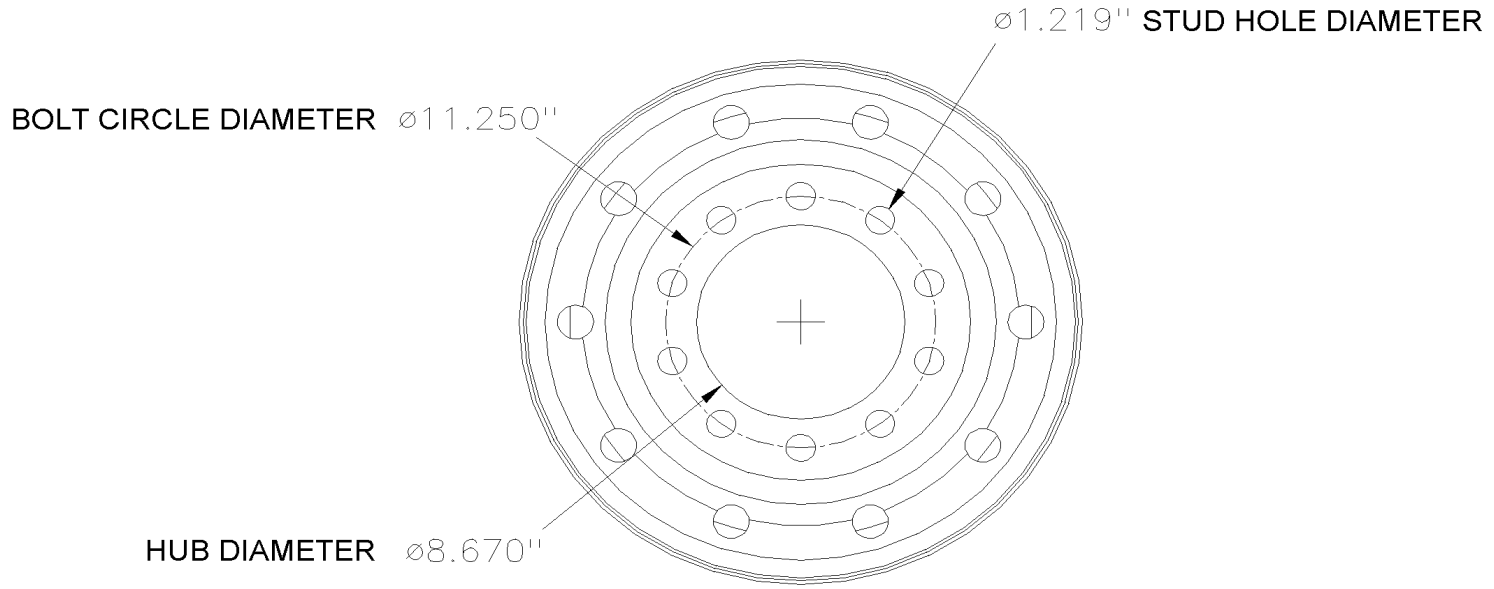

BUS MOUNT STANDARD

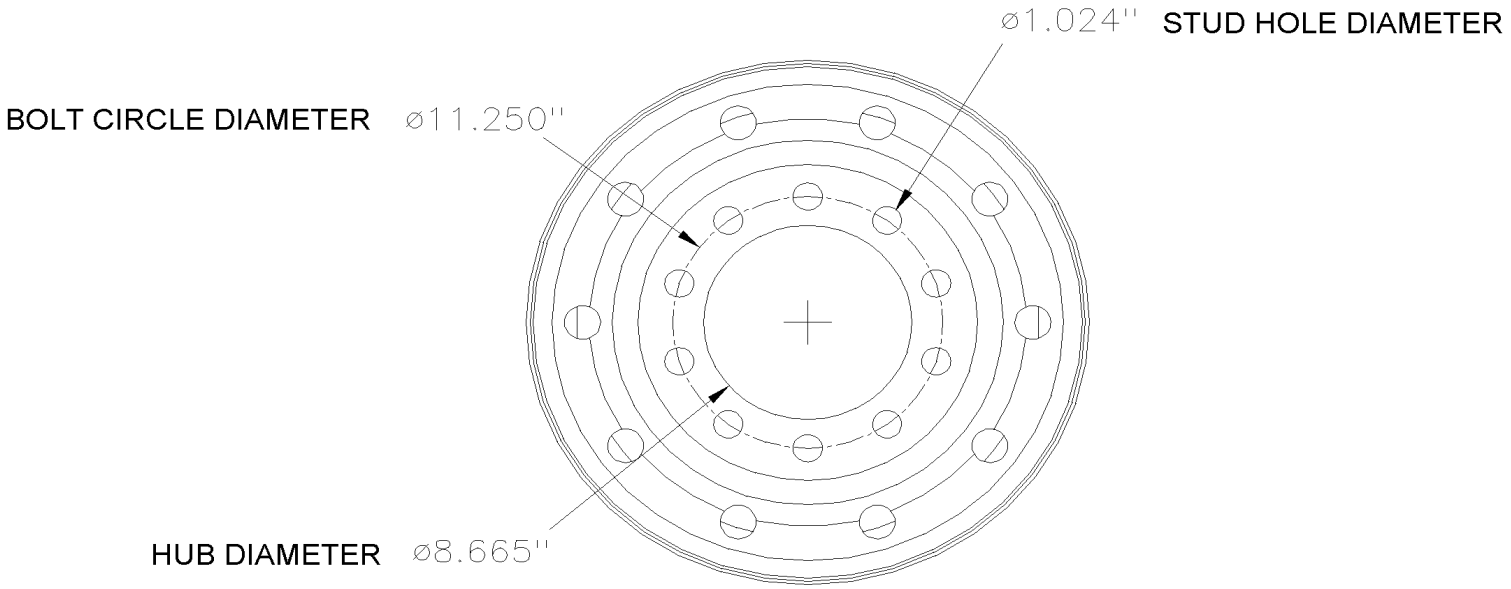

TRUCK MOUNT METRIC

From 2-7767 To 8-9339		Date:07/2024	PAGE:Y2-1318-01

WHEELS & COMPONENTS - TRUCK MOUNT (METRIC)

Item#	Part	Description	XLII 45	XLII MTH40	XLII MTH45	XLII MTH45E	NOTES
		STEEL WHEELS / HUB-MOUNTED					
1	650484	WHEEL, STEEL HUB 22.5 X 8.25 / WHITE / POWDER COAT	AR	AR	AR	AR	
1	650486	WHEEL, STEEL HUB 22.5 X 9.00 / SILVER / POWDER COAT	AR	AR	AR	AR	
1	650485	WHEEL, STEEL HUB 22.5 X 9.00 / WHITE / POWDER COAT	AR	AR	AR	AR	
1	650487	WHEEL, STEEL HUB 22.5 X 8.25 / SILVER / POWDER COAT	AR	AR	AR	AR	
		ALUMINUM WHEELS / HUB-MOUNTED					
1	650488	WHEEL, ALU. HUB 22.5 X 9.00 / INSIDE POLISH	AR	AR	AR	AR	C
1	650489	WHEEL, ALU. HUB 22.5 X 9.00 / OUTISIDE POLISH	AR	AR	AR	AR	C
1	650490	WHEEL, ALU. HUB 22.5 X 9.00 / BOTH SIDE POLISH	AR	AR	AR	AR	C
1	650491	WHEEL, ALU. HUB 22.5 X 9.00 / BOTH SIDE MACHINED	AR	AR	AR	AR	C
1	650587	WHEEL, ALU. HUB 22.5 X 9.00 / BOTH SIDE DURA-BRIGHT	AR	AR	AR	AR	C
1	650601	WHEEL, ALU. HUB 22.5 X 9.00 / INSIDE DURA BRIGHT	AR	AR	AR	AR	C
1	650602	WHEEL, ALU. HUB 22.5 X 9.00 / OUTSIDE DURA-BRIGHT	AR	AR	AR	AR	C
1	650662	WHEEL, ALU. HUB 22.5 X 10.5 / BOTH SIDE DURA-BRIGHT XBR	AR	AR	AR	AR	C
1	650443	WHEEL, ALU. HUB 22.5 X 10.5 / OUTSIDE POLISH	AR	AR	AR	AR	C
1	650958	WHEEL, ALU. HUB 22.5 X 9.00 / BOTH SIDE MACHINED	AR	AR	AR	AR	H
1	650959	WHEEL, ALU. HUB 22.5 X 9.00 / OUTISIDE POLISH	AR	AR	AR	AR	H
1	650976	WHEEL, ALU. HUB 22.5 X 9.00 / OUTSIDE DURA-BRIGHT	AR	AR	AR	AR	H
1	650989	WHEEL, ALU. HUB 22.5 X 9.00 / INSIDE POLISH	AR	AR	AR	AR	H
1	651007	WHEEL, ALU. HUB 22.5 X 9.00 / INSIDE DURA BRIGHT	AR	AR	AR	AR	H
1	651021	WHEEL, ALU. HUB 22.5 X 9.00 / BOTH SIDE POLISH	AR	AR	AR	AR	H
1	651038	WHEEL, ALU. HUB 22.5 X 9.00 / BOTH SIDE DURA-BRIGHT	AR	AR	AR	AR	H
1	650728	WHEEL, ALU. HUB 22.5 X 14.00 / INSIDE POLISH	AR	AR	AR	AR	S
1	651548	WHEEL, ALU. HUB 22.5 X 14.00 / INSIDE POLISH	AR	AR	AR	AR	S
1	650729	WHEEL, ALU. HUB 22.5 X 14.00 / INSIDE DURA BRIGHT	AR	AR	AR	AR	S
1	651549	WHEEL, ALU. HUB 22.5 X 14.00 / INSIDE DURA BRIGHT	AR	AR	AR	AR	S
		WHEELS / STUD MOUNTED					
1	650638	WHEEL, ALU. STUD 22.5 X 9.00 / BOTH SIDE DURA-BRIGHT	AR				
1	650666	WHEEL, ALU. STUD 22.5 X 9.00 / INSIDE DURA BRIGHT	AR				
1	650667	WHEEL, ALU. STUD 22.5 X 9.00 / OUTSIDE DURA-BRIGHT	AR				
		VALVES - VALVE EXTENTION & HOLDER					
2	150293	VALVE / W/STEEL WHEEL / "KNORR-BREMSE " BRAKE -	AR	AR	AR	AR	A
2	650194	VALVE / W/ALUMINUM WHEEL / 1.38" LG W/60 deg	AR	AR	AR	AR	
2	650744	VALVE / W/ALUMINUM WHEEL / 1.26" LG	AR	AR	AR	AR	

From 2-7767 To 8-9339		Date:07/2024	PAGE:Y2-1318-01

WHEELS & COMPONENTS - TRUCK MOUNT (METRIC)

Item#	Part	Description	XLII 45	XLII MTH40	XLII MTH45	XLII MTH45E	NOTES
2	651078	VALVE / W/ALUMINUM WHEEL / 2.31" LG	AR	AR	AR	AR	
2	651114	VALVE / W/ALUMINUM WHEEL / 2.60" LG W/60 deg	AR	AR	AR	AR	
NS	650164	. CAP VALVE / CHROME	AR	AR	AR	AR	
NS	650151	. CAP VALVE / STD	AR	AR	AR	AR	
NS	650151	. CAP VALVE / STD	AR	AR	AR	AR	
NS	650008	. SPRING VALVE	AR	AR	AR	AR	
NS	650205	. SPRING VALVE 21116	AR	AR	AR	AR	B
2	650201	EXTENSION VALVE 1 3/8" LG	AR	AR	AR	AR	
NS	650188	EXTENSION VALVE / 7" LG	AR	AR	AR	AR	
NS	650178	RUBBER HOLDER / 1.5" O.D. / EXTENSION VALVE To 5-8771	AR	AR	AR	AR	
2	651064	RUBBER HOLDER / 2" O.D. / EXTENSION VALVE From 5-8772	AR	AR	AR	AR	
		WEIGHTS					
3	650062	WEIGHT BALANCING / W/STEEL WHEEL / 2 OZ	AR	AR	AR	AR	
3	650063	WEIGHT BALANCING / W/STEEL WHEEL / 3 OZ	AR	AR	AR	AR	
3	650064	WEIGHT BALANCING / W/STEEL WHEEL / 4 OZ	AR	AR	AR	AR	
3	650065	WEIGHT BALANCING / W/STEEL WHEEL / 6 OZ	AR	AR	AR	AR	
3	650066	WEIGHT BALANCING / W/STEEL WHEEL / 8 OZ	AR	AR	AR	AR	
3	650067	WEIGHT BALANCING / W/STEEL WHEEL / 10 OZ	AR	AR	AR	AR	
3	650068	WEIGHT BALANCING / W/STEEL WHEEL / 12 OZ	AR	AR	AR	AR	
3	650069	WEIGHT BALANCING / W/STEEL WHEEL / 14 OZ	AR	AR	AR	AR	
3	650070	WEIGHT BALANCING / W/STEEL WHEEL / 16 OZ	AR	AR	AR	AR	
3	650175	WEIGHT BALANCING / W/ALUMINUM WHEEL / INT. & EXT. / 2 OZ	AR	AR	AR	AR	
3	650109	WEIGHT BALANCING / W/ALUMINUM WHEEL / INT. & EXT. / 3 OZ	AR	AR	AR	AR	
3	650110	WEIGHT BALANCING / W/ALUMINUM WHEEL / EXT. ON 4 OZ	AR	AR	AR	AR	
3	650114	WEIGHT BALANCING / W/ALUMINUM WHEEL / INT. ON 4 OZ	AR	AR	AR	AR	
3	650111	WEIGHT BALANCING / W/ALUMINUM WHEEL / EXT. ON 6 OZ	AR	AR	AR	AR	
3	650115	WEIGHT BALANCING / W/ALUMINUM WHEEL / INT. ON 6 OZ	AR	AR	AR	AR	
3	650112	WEIGHT BALANCING / W/ALUMINUM WHEEL / EXT. ON 8 OZ	AR	AR	AR	AR	
3	650116	WEIGHT BALANCING / W/ALUMINUM WHEEL / INT. ON 8 OZ	AR	AR	AR	AR	
3	650192	WEIGHT BALANCING / W/ALUMINUM WHEEL / W/ADHES 6 OZ	AR	AR	AR	AR	
3	650206	WEIGHT BALANCING / POWDER (12 OZ BAG)	AR	AR	AR	AR	
		HUBODOMETER					
4	650002	HUBODOMETER, COMPLETE 11 X 20 & 12 X 22.5 MPH / STEMCO	AR	AR	AR	AR	
4	650117	HUBODOMETER, COMPLETE 11 X 20 & 12 X 22.5 KMH / STEMCO	AR	AR	AR	AR	
4	590216	HUBODOMETER, COMPLETE 11 X 20 & 12 X 22.5 KMH / V.D.O.	AR	AR	AR	AR	
4	650174	HUBODOMETER, COMPLETE / FOR 295/80 KMH	AR	AR	AR	AR	
5	650145	HUBODOMETER BRACKET / W/8 STUDS AXLE SHAFT	AR	AR	AR	AR	

From 2-7767 To 8-9339		Date:07/2024	PAGE:Y2-1318-01

WHEELS & COMPONENTS - TRUCK MOUNT (METRIC)

Item#	Part	Description	XLII 45	XLII MTH40	XLII MTH45	XLII MTH45E	NOTES
		OTHERS					
6	5001339	CAP, PLASTIC CHROME / WHEEL NUT / HUB MOUNT / PUSH-ON TYPE	60	60	60	60	E
7	650134	WHEEL GUARD MYLAR / WHEEL & HUB	AR	AR	AR	AR	
8	621753	HUB CAP PLASTIC CHROME W/NUT / HUB MOUNT / METRIC	2	2	2	2	G
. NS	624215	. CAP NUT COVER WRENCH	1	1	1	1	G
8	611339	HUB CAP PLASTIC CHROME W/NUT / HUB MOUNT / METRIC	2	2	2	2	F
. NS	611470	. HUB CAP PLASTIC CHROME W/NUT / HUB MOUNT / METRIC	2	2	2	2	F
. . NS	624215	. . CAP NUT COVER WRENCH	1	1	1	1	F
. NS	19507612	. CAP NUT CHROME / SCREW TYPE	10	10	10	10	F
10	650447	TIRE MICHELIN 455/55 R22.5 X-ONE-XTE SUMMER TIRE	1	1	1	1	
10	652630	TIRE MICHELIN 455/55 R22.5 X ONE XDA-HT PLUS SUMMER TIRE	1	1	1	1	
10	651120	TIRE MICHELIN 455/55 R22.5 X ONE XONE XDA-ENERGY SUMMER TIRE	1	1	1	1	
10	651099	TIRE MICHELIN 455/55 R22.5 XD-N2 WINTER TIRE	1	1	1	1	
NS	652066	WHEEL NUT FLAG, ORANGE	AR	AR	AR	AR	
NS	683529	CLEANER "ALUMINUM WHEEL" / SPRAY 22 OZ.	AR	AR	AR	AR	
NS	683527	SEALANT "ALLUMINUM WHEEL" / SPRAY 13 OZ.	AR	AR	AR	AR	
NS	683528	POLISH "ALLUMINUM WHEEL" / WAX 16 OZ.	AR	AR	AR	AR	
		VALVES - WITH TIRE PRESSURE SENSOR					
30	066446	DECAL / "WARNING DETECTOR INSIDE" / ENGLISH & FRANCAIS	AR	AR	AR	AR	
30	066445	DECAL / "WARNING DETECTOR INSIDE" / ENGLISH	AR	AR	AR	AR	
31	**Y2-1318-99**	**TIRE MONITOR - PRESSURE & TEMPERATURE / "RETROFIT"**					
NS	MI02-17	SEE MAINTENANCE INFORMATION	1	1	1	1	
NS	MI03-26A	SEE MAINTENANCE INFORMATION	1	1	1	1	
		A) USE THIS VALVE WITH ALLS STEEL WHEELS MOUNTED WITH "KNORR-BREMSE" BRAKE SYSTEM					
		B) USE THIS EXTENSION WITH POWDER BALANCING WEIGHT					
		C) USE WITH 650178 RUBBER HOLDER					
		E) TO USE WITH NUT 22MM X 33MM THICK (611189)					
		F) TO USE WITH FRONT AND TAG WHEEL					
		G) TO USE WITH DRIVE AXLE WHEEL					
		H) USE WITH 651064 RUBBER HOLDER					
		S) USE ONLY WITH SUPER SINGLE TIRE (650447)					

From Y-7046 To 8-9339		Date:07/2024	PAGE:Y2-1318-99
TIRE MONITOR - PRESSURE & TEMPERATURE / "RETROFIT"			

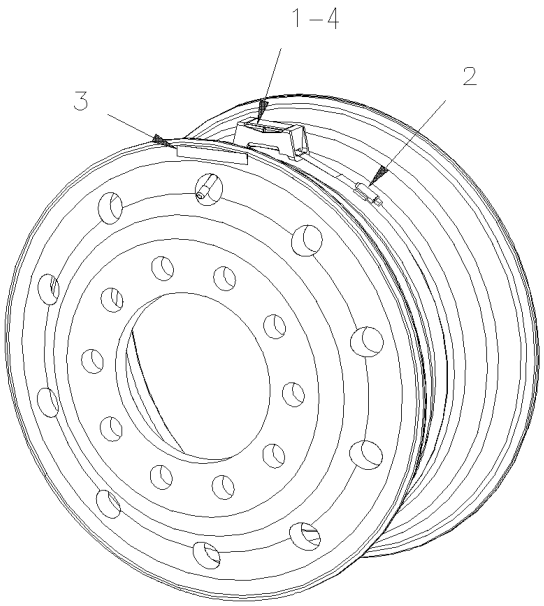

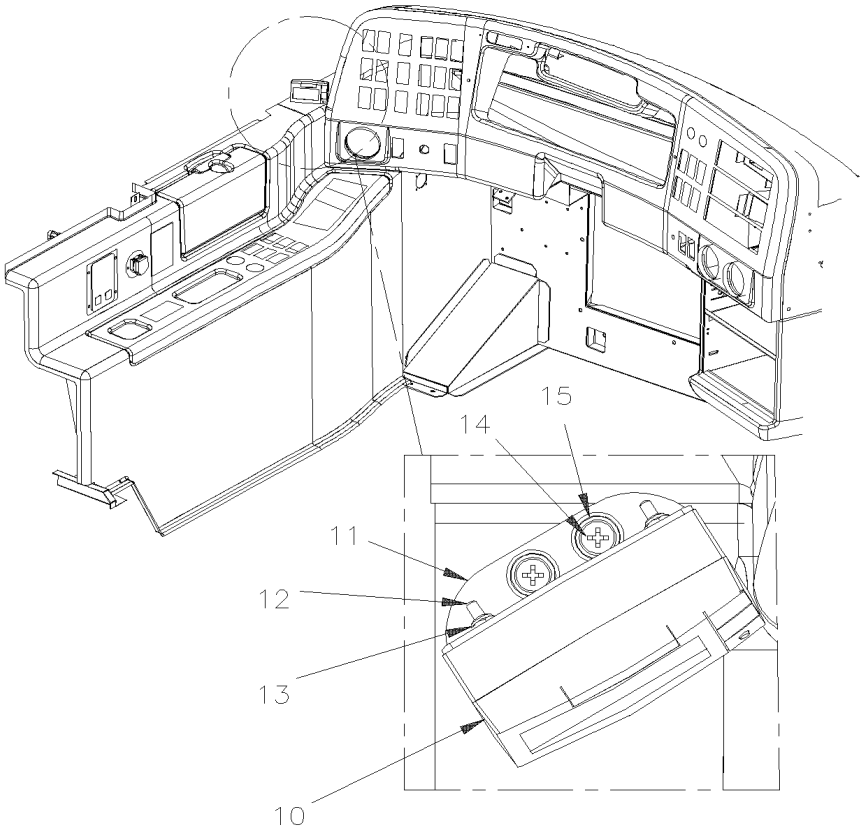

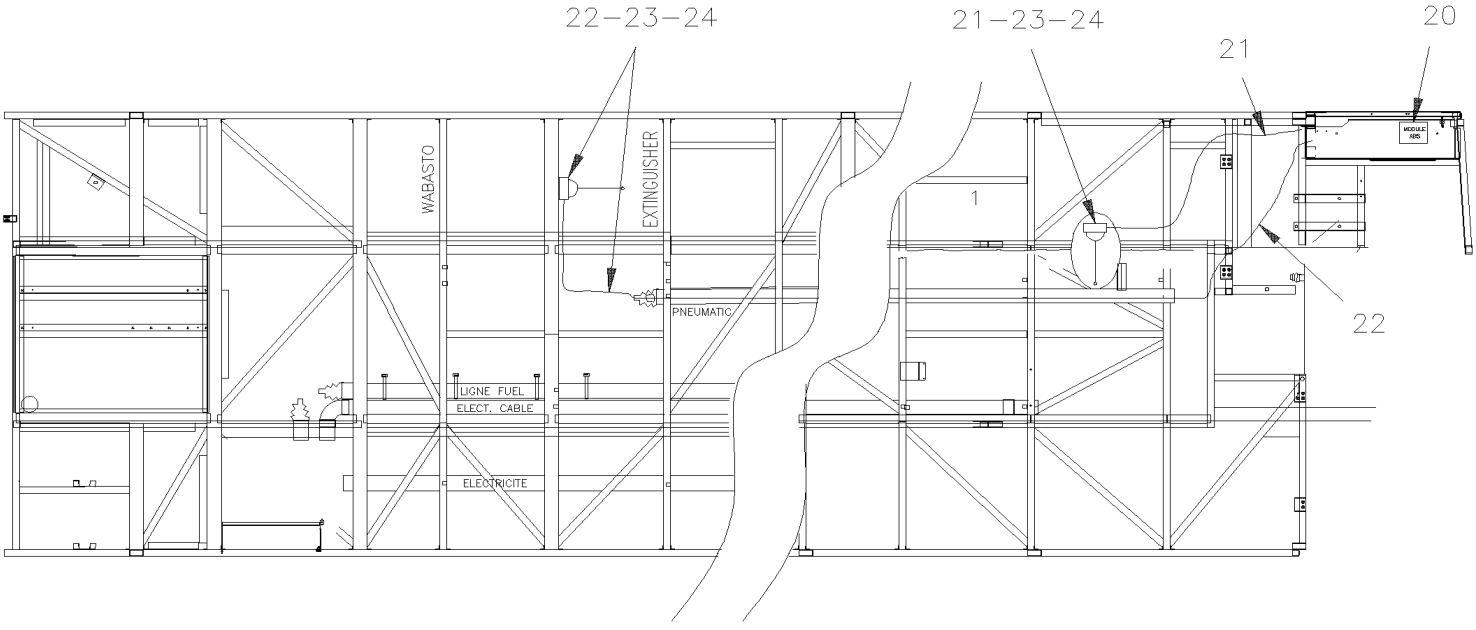

From Y-7046 To 8-9339		Date:07/2024	PAGE:Y2-1318-99

TIRE MONITOR - PRESSURE & TEMPERATURE / "RETROFIT"

Item#	Part	Description	XLII 45	XLII MTH40	XLII MTH45	XLII MTH45E	NOTES
1	382333	DETECTOR PRESSURE & TEMPERATURE	AR		AR	AR	
2	507643	CLAMP DETECTOR PRESSURE / INSIDE OF WHEEL	AR		AR	AR	
3	066445	DECAL / "WARNING DETECTOR INSIDE" / ENGLISH	AR		AR	AR	
4	651068	CRADLE BOX / SENSOR	1		1	1	
10	382332	DISPLAY MONITOR TIRE / FULL PROGRAMATION	1		1	1	
11	382340	SUPPORT DISPLAY	1		1	1	
12	5001454	SCREW MA BDG PH #4-40x1/2 SS	2		2	2	
13	500425	NUT HEX NYRT #4-40 SS	2		2	2	
14	500353	SCREW TP FL PH #8x3/4 BK	2		2	2	
15	500345	WASHER FN CKF .187x.500x.090 BR BK	2		2	2	
20	382334	RECEIVER TIRE MONITOR / ASSY W/CONECTOR	1		1	1	
. NS	382355	. RECEIVER TIRE MONITOR	1		1	1	
21	382331	ANTENNA TIRE MONITOR / FRONT	1		1	1	
22	382335	ANTENNA TIRE MONITOR / REAR	1		1	1	
22	382358	SUPPORT ANTENNA TIRE MONITOR	2		2	2	
23	500623	SCREW TC PAN PH #10-24x3/4 N500	6		6	6	
24	500470	WASHER LO SPT .193x.334x.047 Z050	6		6	6	
NS	563611	INITIALER TIRE SMART CONTROLER / CUSTOMER USE ONLY TO START S	1		1	1	
NS	060910	KIT, COMPLET MODULE TIRE PSI DETECTOR / W/OUT MUX	1				
. NS	IS-04084A	. SEE INSTRUCTION SHEET	1				
NS	060910	KIT, COMPLET MODULE TIRE PSI DETECTOR / W/OUT MUX To 7-9095			1	1	
. NS	IS-04084A	. SEE INSTRUCTION SHEET To 7-9095			1	1	
NS	060906	KIT, COMPLET MODULE TIRE PSI DETECTOR / W/MUX From 7-9096			1	1	
. NS	IS-04084A	. SEE INSTRUCTION SHEET From 7-9096			1	1	

From Y-7046 To 8-9339		Date:07/2024	PAGE:Y2-1325-00
SPARE WHEEL - INSTALLATION			

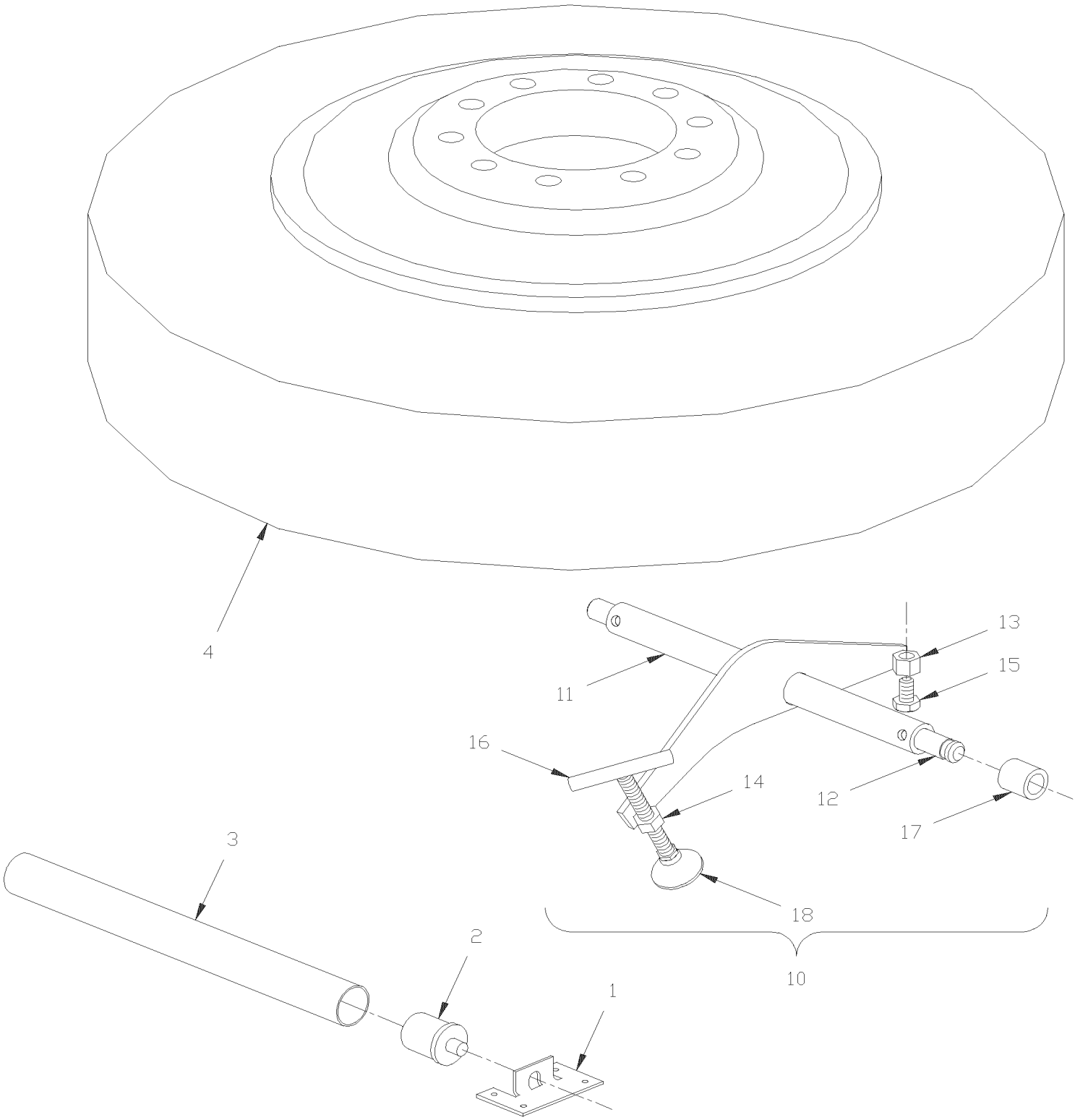

From Y-7046 To 8-9339		Date:07/2024	PAGE:Y2-1325-00

SPARE WHEEL - INSTALLATION

Item#	Part	Description	XLII 45	XLII MTH40	XLII MTH45	XLII MTH45E	NOTES
1	150313	ANGLE SUPPORT	4			4	
2	150314	AXLE SHAFT	4			4	
3	150318	TUBE	2			2	
4	150128	COVER SPARE WHEEL	1			1	
10	150768	ATTACHMENT SPARE TIRE RETAINER ASSY / COMPLETE	1			1	
10	150670	ATTACHMENT SPARE TIRE RETAINER ASSY / COMPLETE	1			1	
11	150769	. ATTACHMENT ASSY	1			1	
11	150669	. ATTACHMENT ASSY	1			1	
12	150771	. . ATTACHMENT RETAINER ASSY	1			1	
13	500792	. . NUT HEX 5/8-11 Z050	1			1	
14	500789	. . NUT HEX 1/2-13 Z050	1			1	
15	500225	. SCREW CAP HEX 5/8-11x1 G5 Z050	1			1	
16	150223	. HANDLE ASSY	1			1	
17	150767	SPACER	1			1	
18	5001001	NUT SW 1/2-13	1			1	

		Date:07/2024	Y2-14
STEERING			

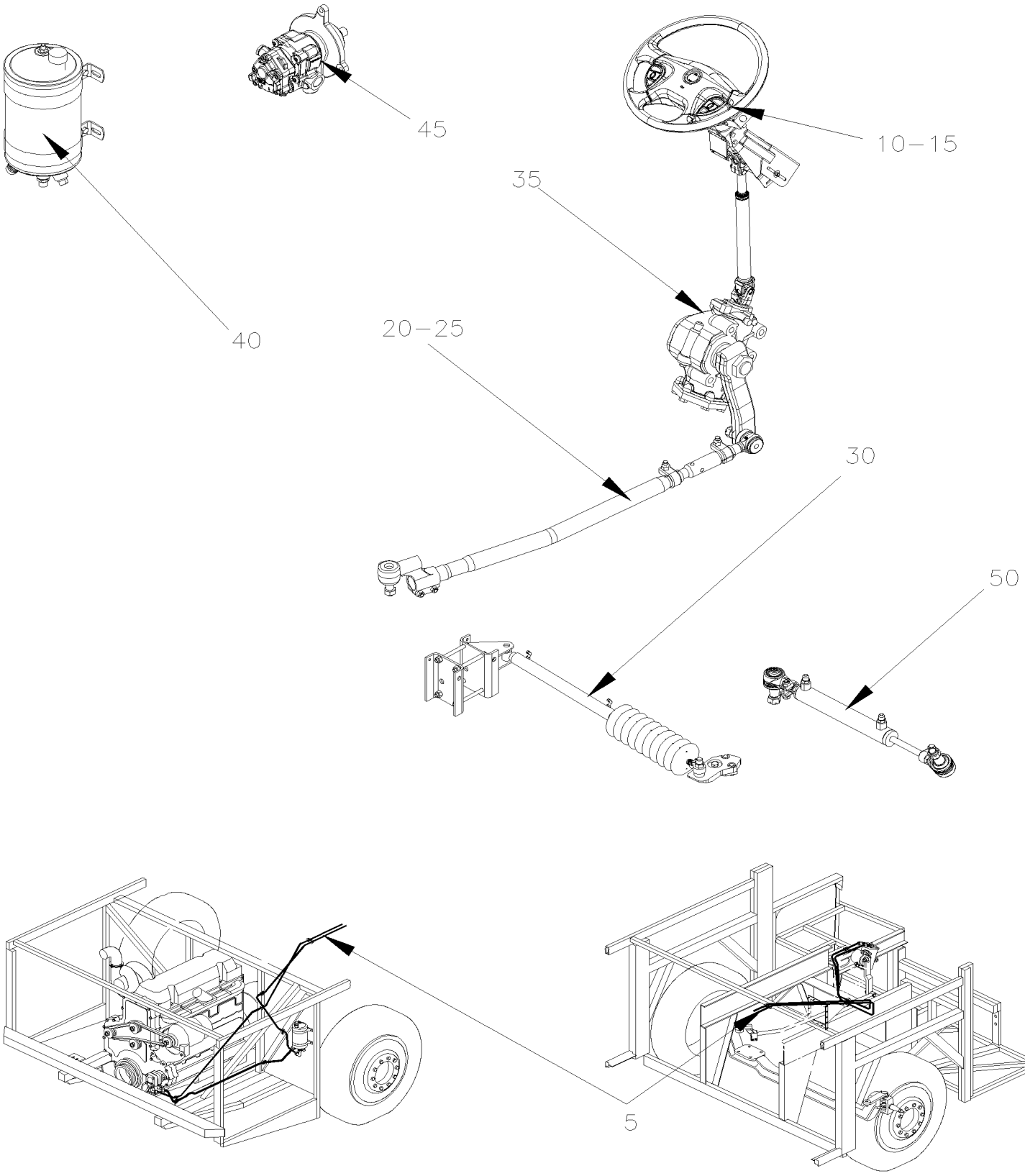

		Date:07/2024	Y2-14

STEERING

Item#	Part	Description	XLII 45	XLII MTH40	XLII MTH45	XLII MTH45E	NOTES
5	Y2-1400-00	POWER STEERING HOSE - INSTALLATION From Y-7046 To 8-9339					
10	Y2-1405-00	STEERING WHEEL & COLUMN ASSY From Y-7046 To 8-9339					
15	Y2-1407-00	STEERING COLUMN & COVER - INSTALLATION From Y-7046 To 8-9339					
20	Y2-1410-00	STEERING GEAR BOX & DRAG LINK - INSTALLATION From Y-7046 To 8-9339					
25	Y2-1410-50	STEERING RODS - INSTALLATION W/INDEPENDENT "IS-84" / 16500LBS From Y-7046 To 3-8164					
25	Y2-1410-51	STEERING RODS - INSTALLATION W/INDEPENDENT "NDIFS80P" / 18000LBS From 4-8165 To 8-9339					
30	Y2-1412-00	STEERING DAMPER From Y-7046 To 6-8906					
35	Y2-1415-00	STEERING GEARBOX - "ZF" From Y-7046 To 8-9339					
40	Y2-1420-00	POWER STEERING TANK - 4 QT U.S. From Y-7046 To 8-9339					
45	Y2-1427-00	POWER STEERING PUMP - "TRW" From Y-7046 To 8-9339					
50	Y2-1430-50	CYLINDER POWER STEERING From 4-8165 To 8-9339					

From Y-7046 To 8-9339		Date:07/2024	PAGE:Y2-1400-00
POWER STEERING HOSE - INSTALLATION			

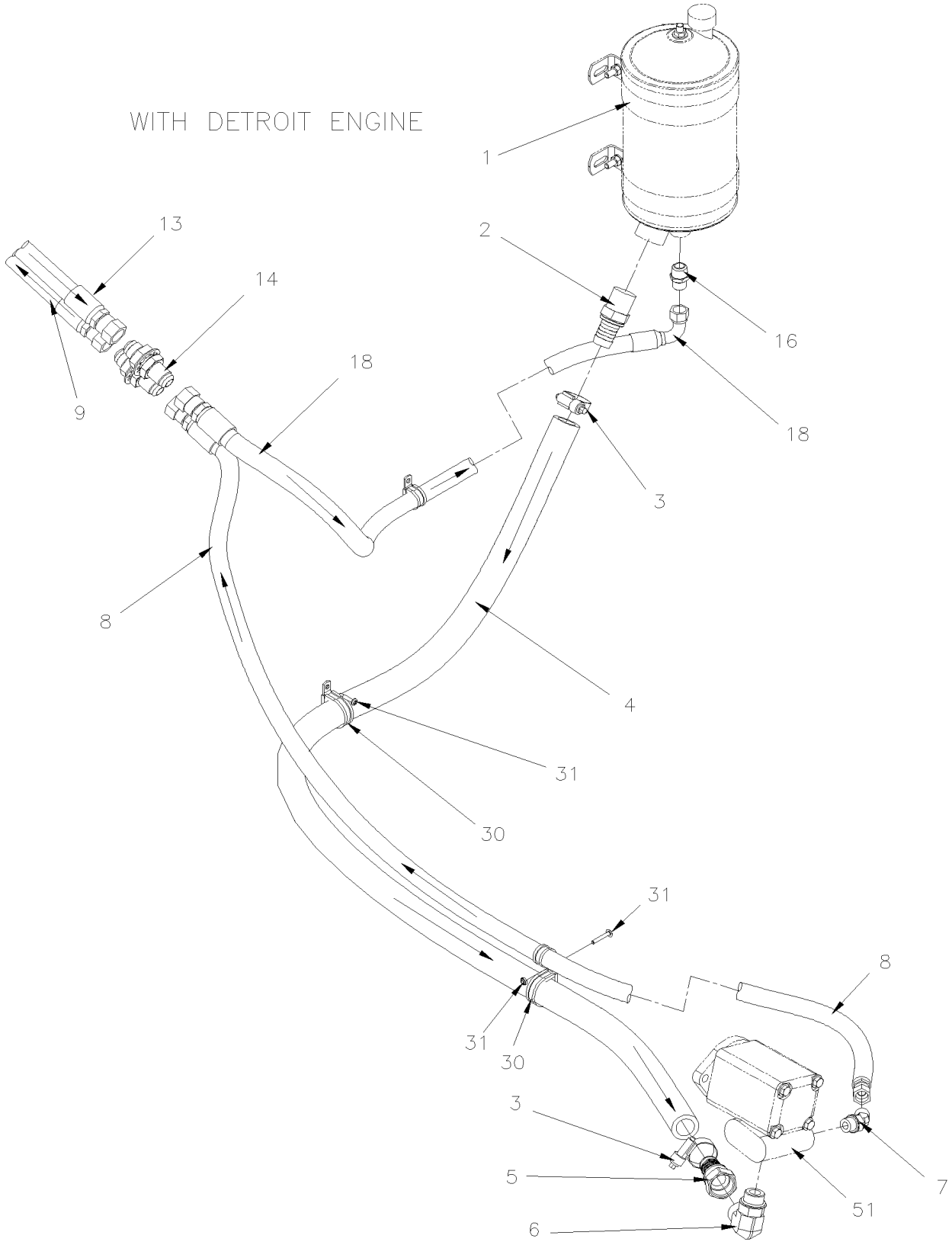

From Y-7046 To 8-9339		Date:07/2024	PAGE:Y2-1400-00
POWER STEERING HOSE - INSTALLATION			

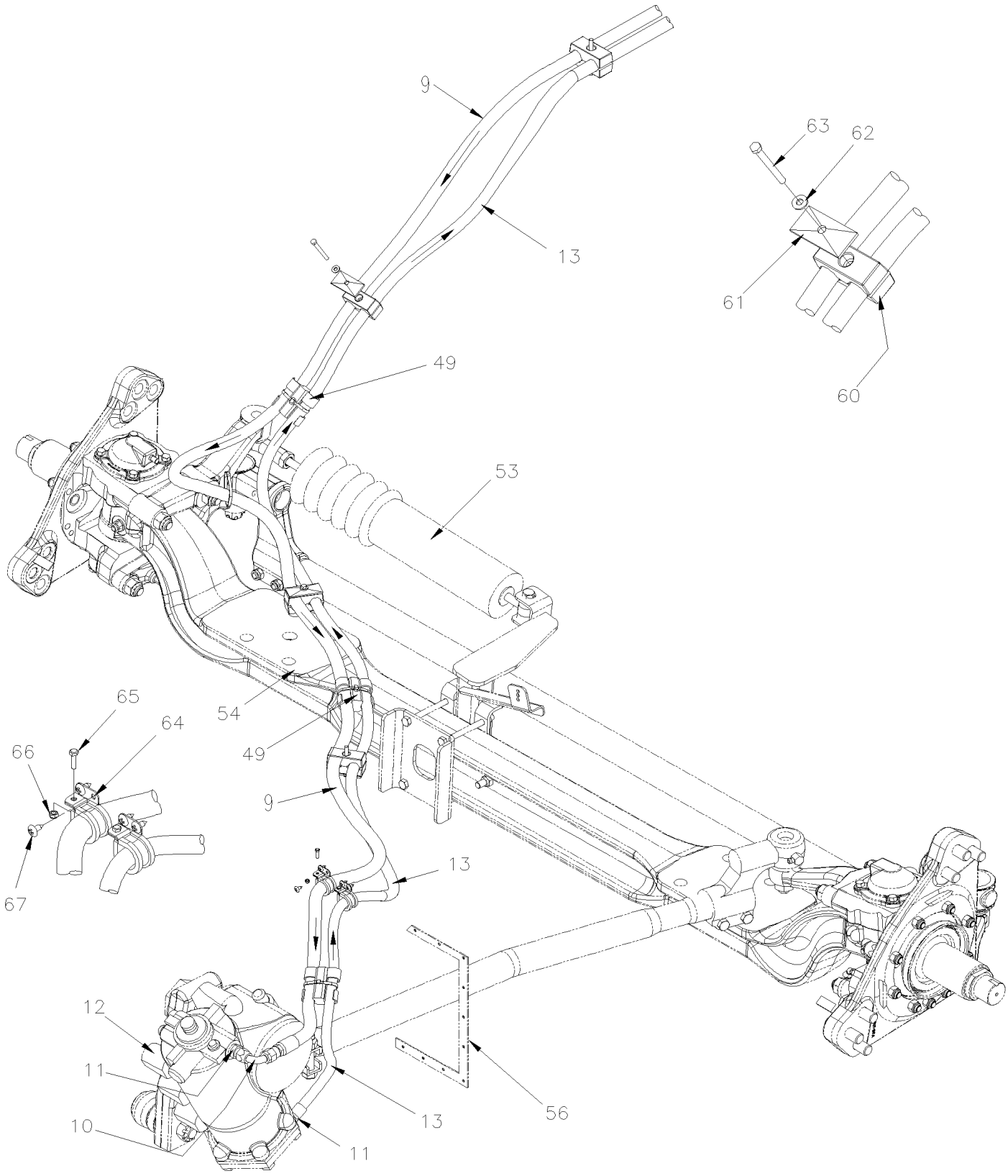

From Y-7046 To 8-9339		Date:07/2024	PAGE:Y2-1400-00
POWER STEERING HOSE - INSTALLATION			

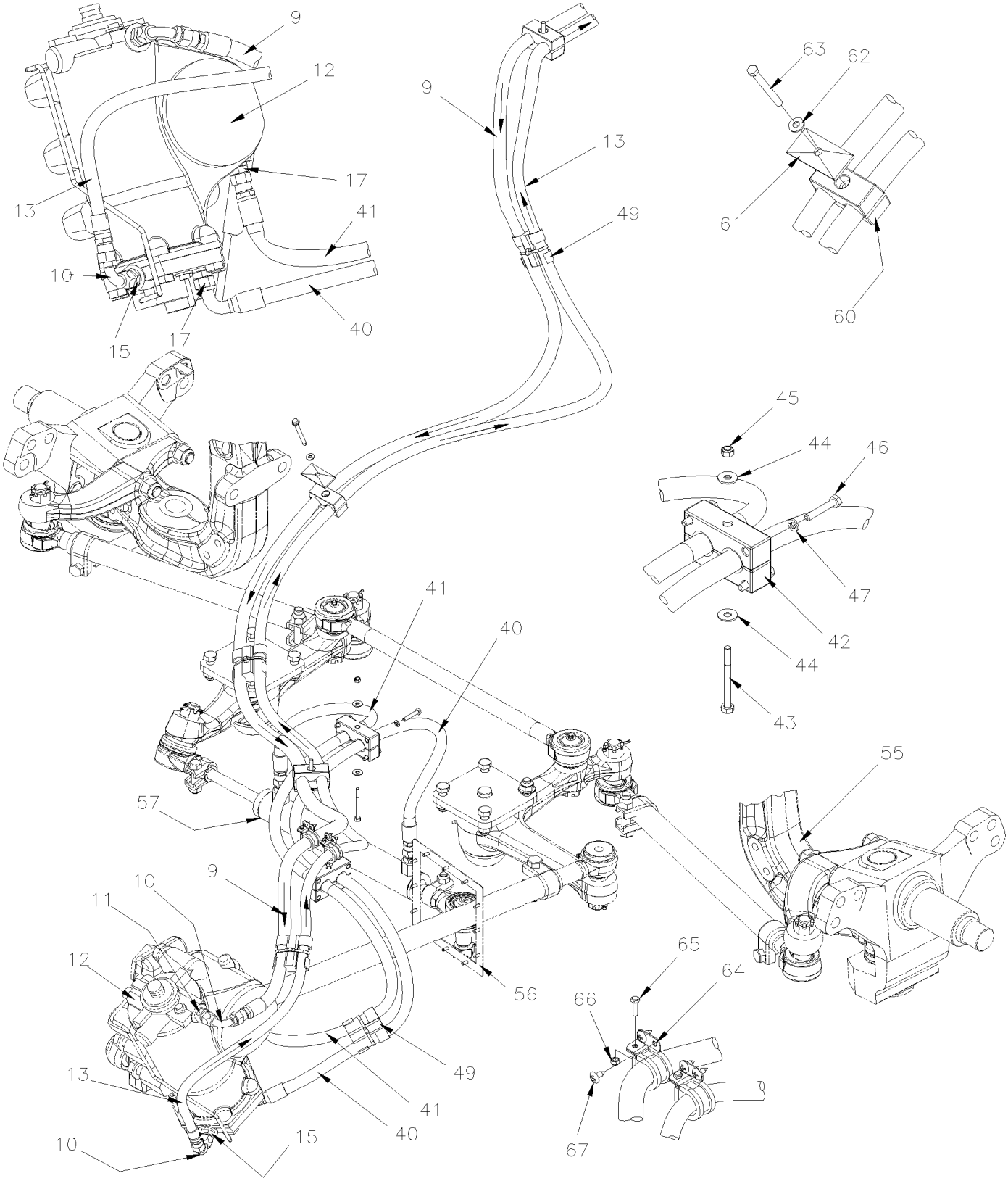

From Y-7046 To 8-9339		Date:07/2024	PAGE:Y2-1400-00

POWER STEERING HOSE - INSTALLATION

Item#	Part	Description	XLII 45	XLII MTH40	XLII MTH45	XLII MTH45E	NOTES
1	**Y2-1420-00**	**POWER STEERING TANK - 4 QT U.S.**					
2	5011086	MALE CONNECTOR / PUSH-LOK FITTING / 1NPT-Mx#16 STL	1	1	1	1	
3	504291	HOSE CLAMP / 1"1/8-1"3/4 SS / E.T. 20	AR	AR	AR	AR	
4	160995	HOSE #16 1200MM	1		1		
4	161131	HOSE #16 1350MM		1		1	
4	163483	HOSE #16 1450MM			1		
4	503577	. HOSE #16 / S.L.	AR	AR	AR	AR	
5	5011147	FEMALE CONNECTOR SWIVEL / COLLAR FITTING / #16JIC-Fx#16 STL	1	1	1	1	
6	5011148	MALE ELBOW 90° / JIC 37° FITTING / #16JIC-Mx#12ORB-M STL	1	1	1	1	
7	5011167	MALE ELBOW 45º / JIC 37° FITTING / #8JIC-Mx#8ORB-M STL	1	1	1	1	
8	161028	HOSE ASSY / #8 5033MM To 1-7427	1				
8	161028	HOSE ASSY / #8 5033MM To 1-7427			1		
8	161137	HOSE ASSY / #8 5033MM From 1-7428 To 7-9095	1		1		
8	161027	HOSE ASSY / #8 4520MM To 4-8345		1		1	
8	161193	HOSE ASSY / #8 4620MM From 4-8346 To 7-9095		1		1	
8	163473	HOSE ASSY / #8 2750MM From 7-9096			1	1	
NS	505110	. COIL PROTECTOR / PLASTIC / #12 To 5-8516	AR	AR	AR	AR	
NS	505181	. COIL PROTECTOR / PLASTIC / #8 From 5-8517	AR	AR	AR	AR	
9	161023	HOSE ASSY / #8 9165MM	1				A
9	161023	HOSE ASSY / #8 9165MM To 1-7427			1		
9	161136	HOSE ASSY / #8 9195MM From 1-7428 To 7-9095			1		A
9	161022	HOSE ASSY / #8 8306MM To 7-9095		1			A
9	161021	HOSE ASSY / #8 9830MM To 7-9095				1	A
9	163479	HOSE ASSY / #8 11570MM (W5) From 7-9096			1		A
9	163474	HOSE ASSY / #8 11570MM (X3/WE) From 7-9096				1	A
9	161197	KIT, HOSE REPAIR / FRONT SECTION STEERING / X SERIES	1	1	1	1	
. NS	WB04-10A	. SEE WARRANTY BULLETIN	1	1	1	1	
. NS	161195	. HOSE ASSY / #8 1570MM	1	1	1	1	
. NS	501456	. MALE CONNECTOR / JIC 37° FITTING / #8JIC-Mx#8 STL	1	1	1	1	
NS	505110	. COIL PROTECTOR / PLASTIC / #12 To 5-8516	AR	AR	AR	AR	
NS	505181	. COIL PROTECTOR / PLASTIC / #8 From 5-8517	AR	AR	AR	AR	
10	501845	SWIVEL NUT ELBOW 90º LONG / JIC 37° FITTING / #8JIC-Fx#8JIC-Mx1.86 STL	2	2	2	2	
11	5011192	MALE CONNECTOR / JIC 37° FITTING / #8JIC-MxM18-1.5-M STL	2				
. NS	N.P.N.	. O-RING	1				4
. NS	N.P.N.	. WASHER RET	1				4
NS	688910	THREAD LOCKER LOCTITE #262 / RED / 250ml	AR	AR	AR	AR	
12	**Y2-1415-00**	**STEERING GEARBOX - "ZF"**	1	1	1	1	
13	161129	HOSE ASSY / #8 9525MM	1				A
13	161130	HOSE ASSY / #8 8636MM To 7-9095		1			A
13	161129	HOSE ASSY / #8 9525MM To 7-9095			1		A
13	161128	HOSE ASSY / #8 10160MM To 7-9095				1	A
13	163475	HOSE ASSY / #8 11900MM From 7-9096			1	1	A

From Y-7046 To 8-9339		Date:07/2024	PAGE:Y2-1400-00

POWER STEERING HOSE - INSTALLATION

Item#	Part	Description	XLII 45	XLII MTH40	XLII MTH45	XLII MTH45E	NOTES
13	161197	KIT, HOSE REPAIR / FRONT SECTION STEERING / X SERIES	1	1	1	1	
. NS	WB04-10A	. SEE WARRANTY BULLETIN	1	1	1	1	
. NS	161195	. HOSE ASSY / #8 1570MM	1	1	1	1	
. NS	501456	. MALE CONNECTOR / JIC 37° FITTING / #8JIC-Mx#8 STL	1	1	1	1	
NS	505110	. COIL PROTECTOR / PLASTIC / #12 To 5-8516	AR	AR	AR	AR	
NS	505181	. COIL PROTECTOR / PLASTIC / #8 From 5-8517	AR	AR	AR	AR	
14	501815	BULKHEAD UNION / JIC 37° FITTING / #8JIC-Mx#8JIC-M STL	2	2	2	2	
NS	500858	WASHER LO INT .769x1.245x.055 Z050	2	2	2	2	
15	5011192	MALE CONNECTOR / JIC 37° FITTING / #8JIC-MxM18-1.5-M STL		2	2	2	
. NS	N.P.N.	. O-RING		1	1	1	4
. NS	N.P.N.	. WASHER RET		1	1	1	4
16	501739	MALE CONNECTOR / JIC 37° FITTING / #8JIC-Mx1/2NPT-M STL	1	1	1	1	
17	5011192	MALE CONNECTOR / JIC 37° FITTING / #8JIC-MxM18-1.5-M STL		1	1	1	
. NS	N.P.N.	. O-RING		1	1	1	4
. NS	N.P.N.	. WASHER RET		1	1	1	4
18	161048	HOSE ASSY / #8 4215MM To 6-8906	1				
18	161043	HOSE ASSY / #8 4630MM To 7-9095			1		
18	163481	HOSE ASSY / #8 2250MM From 7-9096			1		
18	161026	HOSE ASSY / #8 3988MM To 4-8345		1		1	
18	161188	HOSE ASSY / #8 4133MM From 4-8346 To 5-8471		1		1	
18	161026	HOSE ASSY / #8 3988MM From 5-8472		1		1	
30	952631	CLAMP / 3/4" I.D.	AR	AR	AR	AR	
30	952634	CLAMP / 15/16" I.D.	AR	AR	AR	AR	
31	500613	SCREW TP PAN PH #10x1/2 Z050	AR	AR	AR	AR	
32	952641	CLAMP P STL ZP RUB 34.9 ID	AR	AR	AR	AR	
33	500574	SCREW MA TR PH #10-24x1 1/4 SS	AR	AR	AR	AR	
34	500767	NUT HEX #10-24 Z050	AR	AR	AR	AR	
35	562036	CLAMP / 7/8" I.D. X 90°	AR	AR	AR	AR	
36	500657	SCREW TC TR PH #10-24x1/2 Z050	AR	AR	AR	AR	
40	161185	HOSE SET ASSY / CYLINDER POWER STEERING		1	1	1	
40	163470	. HOSE ASSY / #8 1648MM		1	1	1	
41	163469	. HOSE ASSY / #8 1648MM		1	1	1	
42	161177	. HOSE RETAINER BLOCK CLAMP		4	4	4	B
42	160033	. HOSE RETAINER BLOCK CLAMP		4	4	4	
43	502541	. SCREW CAP HEX M6-1.0x65 G8.8 Z050		1	1	1	
44	500411	. WASHER FL .260x.697x.050 SS		2	2	2	
45	5001182	. NUT HEX NYRT M6-1.0 SS		1	1	1	
45	160122	KIT, POWER STEERING PUMP DISCHARGE HOSE (PRESSURE) X		1	1	1	
. NS	160006	. HOSE PRESSURE, POWER STEERING #8 11690MM		1	1	1	
. NS	1600100	. FLANGE, POWER STEERING HOSE		2	2	2	
. NS	500107	. SCREW TC CAP HEXW 1/4-20x2 1/2 Z050		3	3	3	
. NS		. FLARETITE SEAL ARE NO LONGER USED IN PRODUCTION AND SERVICE		1	1	1	

From Y-7046 To 8-9339		Date:07/2024	PAGE:Y2-1400-00

POWER STEERING HOSE - INSTALLATION

Item#	Part	Description	XLII 45	XLII MTH40	XLII MTH45	XLII MTH45E	NOTES
. NS	504189	. CLAMP DOUBLE ASS / SPLIT BLOC / 22MM/19MM x 67MM POLYA		13	13	13	
. NS	504728	. PLATE RETAINER		3	3	3	
. NS	IS-19040	. INSTRUCTION SHEET		1	1	1	
. NS	FI-19040	. VOIR FEUILLE D'INSTRUCTION		1	1	1	
46	502888	SCREW CAP HEX M6-1.0x35 G8.8 N500		4	4	4	
46	502769	SCREW CAP HEX M6-1.0x70 G10.9 DP		4	4	4	
47	502570	WASHER LO SPT 6.1x11.8x1.6 SS		4	4	4	
49	504634	T-CLIP / 7/8" - 1"		AR	AR	AR	
NS	504637	CABLE TIE / 3/16" x 13"		AR	AR	AR	
NS	500620	SCREW TP FL PH #10x1 1/2 Z050		AR	AR	AR	
51	**Y2-1427-00**	**POWER STEERING PUMP - "TRW"**					
53	**Y2-1412-00**	**STEERING DAMPER**					
54	**Y2-1005-00**	**FRONT AXLE - I BEAM RIGID MODEL "S-84"**					
55	**Y2-1005-50**	**FRONT AXLE - INDEPENDENT MODEL "IS-84" / 16500LBS**					
56	**Y2-1410-00**	**STEERING GEAR BOX & DRAG LINK - INSTALLATION**					
57	**Y2-1430-50**	**CYLINDER POWER STEERING**					
60	504727	CLAMP DOUBLE ASS / 2 HOSE SIZE 3/8"	AR	AR	AR	AR	
61	504728	PLATE RETAINER	AR	AR	AR	AR	
62	500440	WASHER FL .250x.562x.065 Z050	AR	AR	AR	AR	
63	500107	SCREW TC CAP HEXW 1/4-20x2 1/2 Z050	AR	AR	AR	AR	
64	562036	CLAMP / 7/8" I.D. X 90°	AR	AR	AR	AR	
65	502550	SCREW CAP HEX M4-0.7x16 G8.8 Z050	AR	AR	AR	AR	
66	500590	NUT HEX NYRT M4-0.7 Z050	AR	AR	AR	AR	
67	500657	SCREW TC TR PH #10-24x1/2 Z050	AR	AR	AR	AR	
		A) FOR SERVICE, IT'S POSSIBLE TO REPAIR THIS HOSE IN FRONT SERVICE COMPARTMENT WITH KIT #161197					
		B) FOR SERVICE, IT'S POSSIBLE TO REPAIR THIS BLOCK IN FRONT SERVICE COMPARTMENT WITH KIT #160122					
		4) NO PARTS NUMBER					

From Y-7046 To 8-9339		Date:07/2024	PAGE:Y2-1405-00
STEERING WHEEL & COLUMN ASSY			

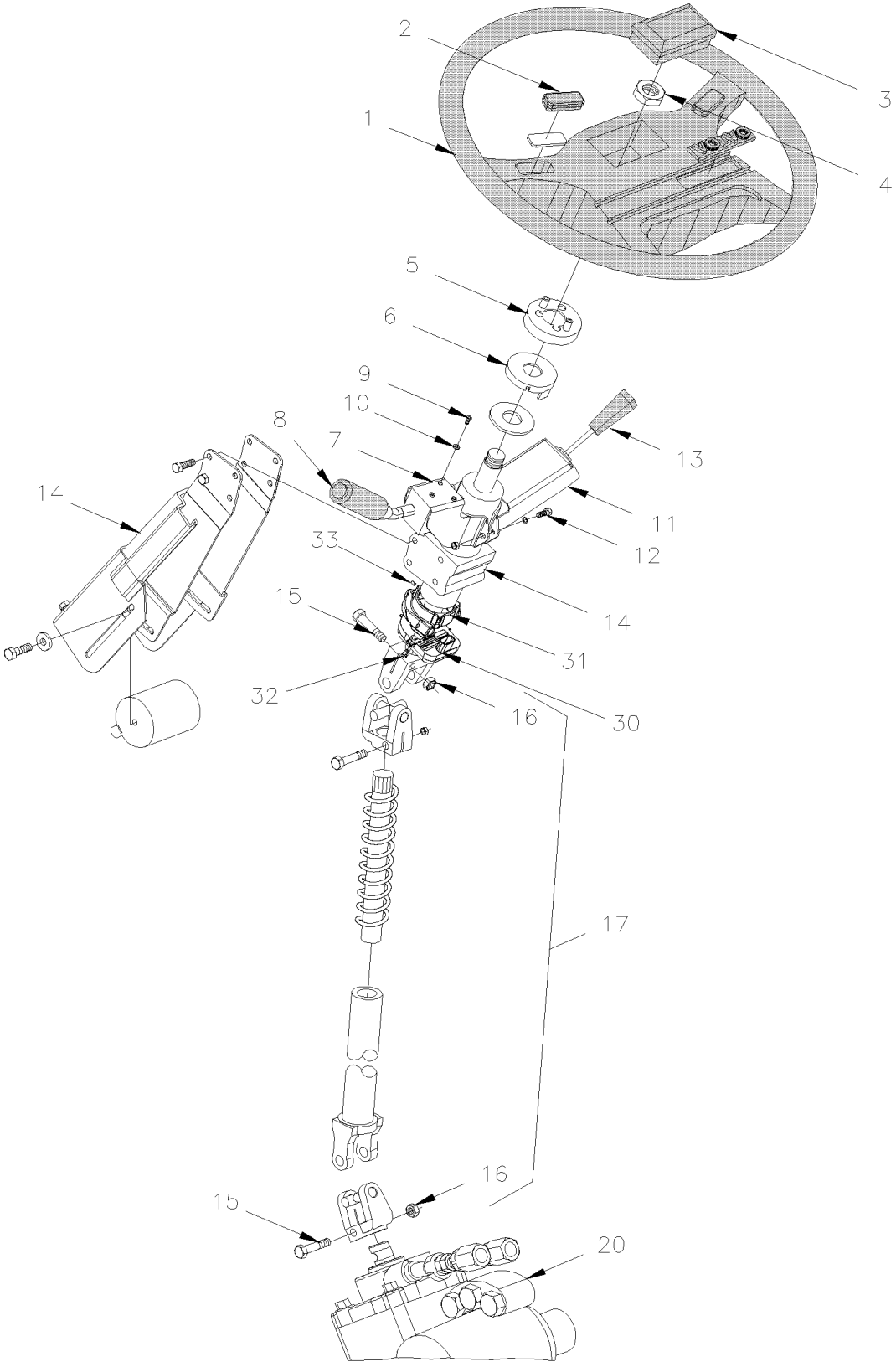

From Y-7046 To 8-9339		Date:07/2024	PAGE:Y2-1405-00

STEERING WHEEL & COLUMN ASSY

Item#	Part	Description	XLII 45	XLII MTH40	XLII MTH45	XLII MTH45E	NOTES
1	661032	STEERING WHEEL	1	1	1	1	
. NS	661061	. BRUSH ASSY SPOKE CONTACT	1	1	1	1	
. NS	661062	. BRUSH ASSY CENTRAL CONTACT	1	1	1	1	
. NS	661063	. GROUNDING CABLE ASSY	1	1	1	1	
. NS	661064	. INSULATOR	1	1	1	1	
2	661052	. HORN BUTTON / ELECTRICAL LH	1	1	1	1	
2	661053	. HORN BUTTON / ELECTRICAL RH	1	1	1	1	
NS	661058	. CONTACT PLATE	2	2	2	2	
3	661033	HORN BUTTON / AIR To 1-7743	1	1	1	1	
3	661085	HORN BUTTON / AIR From 1-7744	1	1	1	1	
4	661051	NUT	1	1	1	1	
5	661035	RING TURN SIGNAL CANCELING	1	1	1	1	
5	504669	RIVET DRV BDG .187x.609 NYL From 1-7435	2	2	2	2	
6	661034	HORN CONTACT RING	1	1	1	1	
7	161062	SUPPORT, DIRECTIONAL SWITCH To 1-7434	1	1	1	1	A
7	161149	SUPPORT, DIRECTIONAL SWITCH From 1-7435	1	1	1	1	
NS	161150	KIT, FLASHER SUPPORT To 1-7434	AR	AR	AR	AR	
. NS	IS-00134	. SEE INSTRUCTION SHEET To 1-7434	1	1	1	1	
8	661037	LEVER ASSY / MULTIFONCTINAL To 1-7703	1	1	1	1	
. NS	660781	. CAP PLEATED RUBBER To 1-7703	1	1	1	1	
8	661075	LEVER ASSY / MULTIFONCTINAL From 1-7704	1	1	1	1	
. NS	660781	. CAP PLEATED RUBBER From 1-7704	1	1	1	1	
9	5001377	SCREW MA PAN PH M5-0.8x8 SS	3	3	3	3	
10	5001378	WASHER LO EXT 5.3x10x0.6 Z050	3	3	3	3	
11	161058	COLLAR / W/O RETARDER	1	1	1	1	
11	161060	COLLAR W/SWITCH SUPPORT	1	1	1	1	
12	502631	SCREW CAP HEX M6-1.0x20 G8.8 Z050	2	2	2	2	
13	562356	SWITCH ASSY / W/LEVER & BOOT / 6 POSITIONS	1	1	1	1	
14	661041	STEERING COLUMN ASSY 36SPL / 79SPL LOWER To 8-9278	1	1	1	1	
14	661122	STEERING COLUMN ASSY W/E.C.S. 36SPL / 66SPL LOWER From 8-9279			1	1	E
NS	641242	MALE CONNECTOR / PUSH-IN FITTING / #4x1/8NPT-M BR	1	1	1	1	
15	661095	SCREW CAP HEX "SPECIAL" STEERING SHAFT "ZF"	2	2	2	2	
16	661096	NUT "SPECIAL" STEERING SHAFT "ZF"	2	2	2	2	
17	661048	SHAFT ASSY STEERING 79SPL / 79SPL LOWER To 8-9278	1	1	1	1	
17	661123	SHAFT ASSY STEERING W/E.C.S. 66SPL / 79SPL LOWER From 8-9279			1	1	E
. NS	661095	. SCREW CAP HEX "SPECIAL" STEERING SHAFT "ZF" From 8-9279			2	2	E
. NS	661096	. NUT "SPECIAL" STEERING SHAFT "ZF" From 8-9279			2	2	E
NS	161220	DECAL "WARNING" STREERING SYSTEM CALIBRA.." From 8-9279			1	1	E
20	**Y2-1415-00**	**STEERING GEARBOX - "ZF"**					
30	661148	SENSOR ANGLE POSITION DETECTOR From 8-9279			1	1	E
. NS	564042	. CONNECTOR / BOSCH 1 928 404 025 From 8-9279			1	1	E
31	161265	SUPPORT SENSOR ANGLE POSITION STEERING From 8-9279			1	1	E

From Y-7046 To 8-9339		Date:07/2024	PAGE:Y2-1405-00

STEERING WHEEL & COLUMN ASSY

Item#	Part	Description	XLII 45	XLII MTH40	XLII MTH45	XLII MTH45E	NOTES
32	5001670	SCREW CAP HEXS M4-0.7x8 G8.8 Z050 From 8-9279			3	3	E
33	500587	SCREW SET HEXS CUP M4-0.7x6 From 8-9279			3	3	E
40	**IS19036**	**PETRI STEERING WHEEL REPLACEMENT**	1	1	1	1	
		A) FOR PRODUCT IMPROVMENT USE KIT #161150					
		E) WITH OPTION "ELECTRONIC CONTROL STABILITY"					

From Y-7046 To 8-9339		Date:07/2024	PAGE:IS19036
PETRI STEERING WHEEL REPLACEMENT			

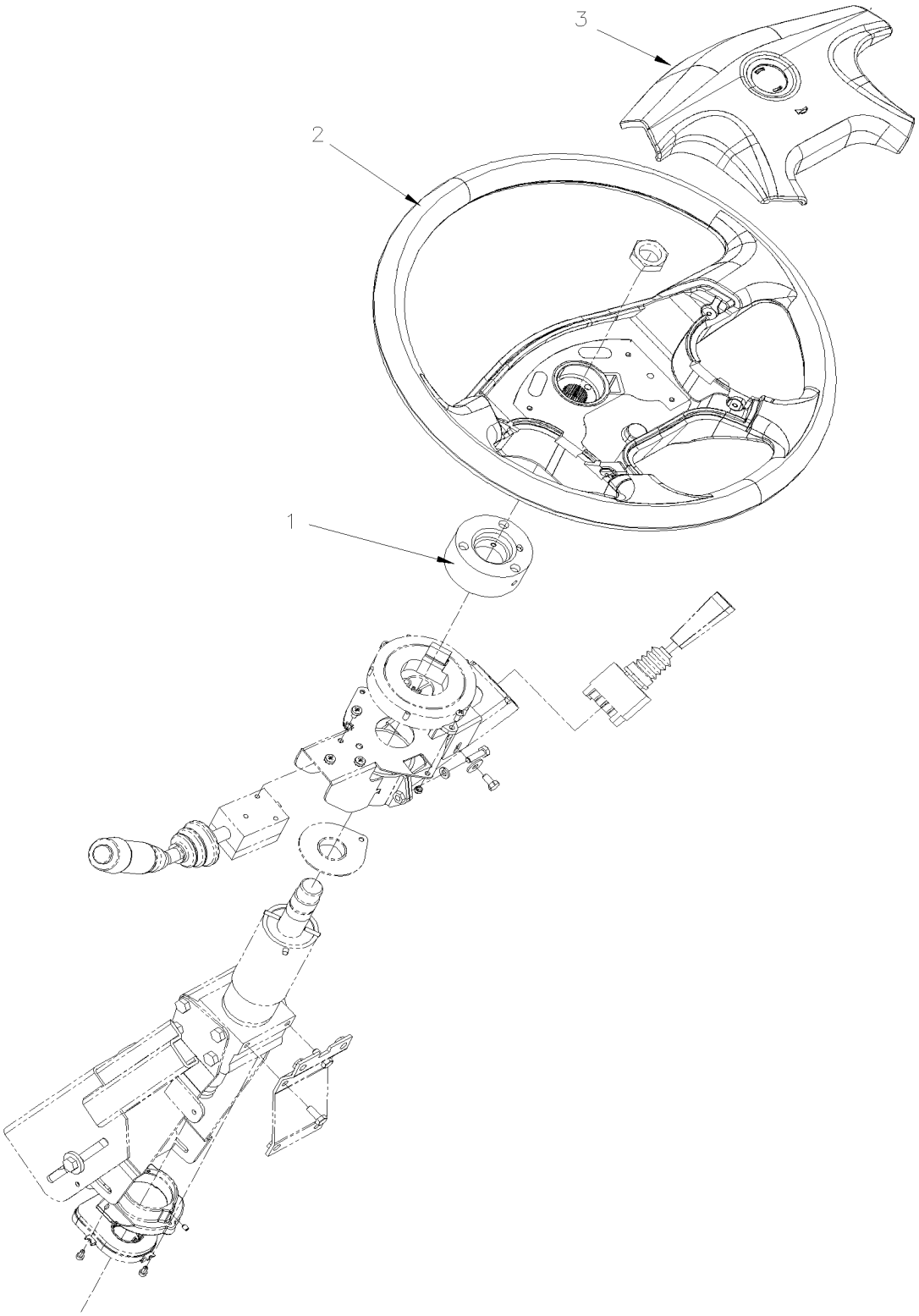

From Y-7046 To 8-9339		Date:07/2024	PAGE:IS19036

PETRI STEERING WHEEL REPLACEMENT

Item#	Part	Description	XLII 45	XLII MTH40	XLII MTH45	XLII MTH45E	NOTES
1	160004	STEERING ADAPTER RING	1	1	1	1	
2	661171	STEERING WHEEL URHETHANE W/OUT ANY CONTROL	1	1	1	1	
3	661149	HORN BUTTON CUSHION PAD W PROVOST EMBLEM	1	1	1	1	
. NS	N.S.S.	. SPRING HORN	4	4	4	4	1
. NS	661162	. SPRING RETAINER / HORN SPRING	4	4	4	4	
. NS	661163	. HORN CONTACT	1	1	1	1	
NS	562697	SWITCH / ON-ON / D.P.D.T. / CH-OVER / W/RED & GREEN LED	1	1	1	1	
NS	564081	CAP / HORN SELECTOR - ELEC / AIR	1	1	1	1	
NS	0610188	HARNESS, INTERFACE STEERING WHEEL	1	1	1	1	
NS	562768	SOCKET TERMINAL / 16-14 / PED 12015870	2	2	2	2	
8	IS-19036	SEE INSTRUCTION SHEET	1	1	1	1	
8	FI-19036	VOIR FEUILLE D'INSTRUCTION	1	1	1	1	
		1) NOT SOLD SEPARATELY					

From Y-7046 To 8-9339		Date:07/2024	PAGE:Y2-1407-00
STEERING COLUMN & COVER - INSTALLATION			

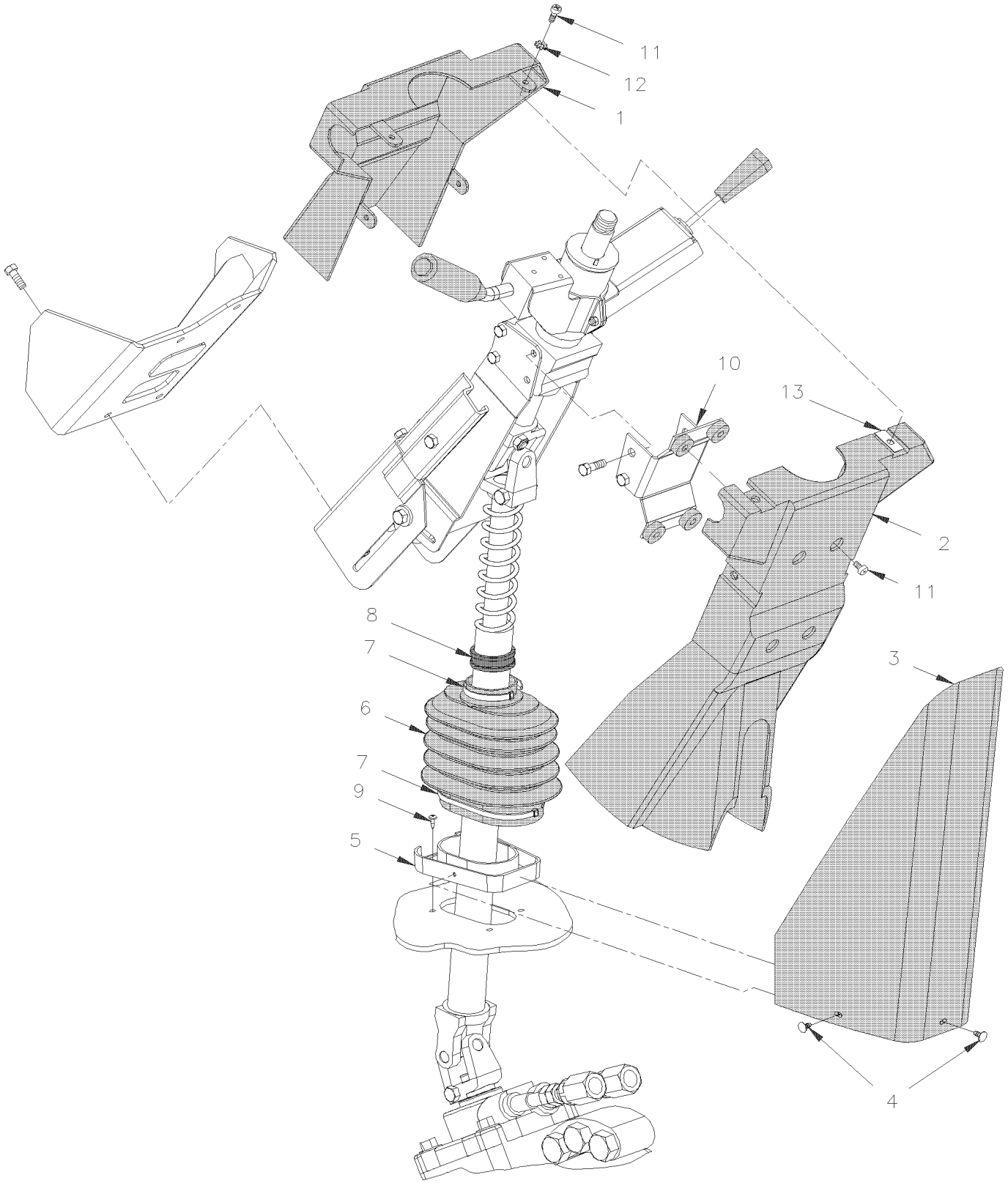

From Y-7046 To 8-9339		Date:07/2024	PAGE:Y2-1407-00

STEERING COLUMN & COVER - INSTALLATION

Item#	Part	Description	XLII 45	XLII MTH40	XLII MTH45	XLII MTH45E	NOTES
1	161086	COVER / W/RETARDER / BLACK	1	1	1	1	
1	161087	COVER / W/O RETARDER / BLACK	1	1	1	1	
2	161084	COVER / W/RETARDER / BLACK	1	1	1	1	
2	161085	COVER / W/O RETARDER / BLACK	1	1	1	1	
3	161066	COVER, LOWER / BLACK	1	1	1	1	
4	504619	CLIP CHRISTMAS TREE / BLACK 7/32"O.D.x1/2" HOLE 3/16	3	3	3	3	
5	391974	PLATE SUPPORT	1	1	1	1	
6	660981	BELLOW	1	1	1	1	
7	504637	CABLE TIE / 3/16" x 13"	2	2	2	2	
8	391930	COLLAR	1	1	1	1	
9	500583	SCREW TP PAN PH #6x1/2 Z050	4	4	4	4	
10	161068	ATTACHMENT	1	1	1	1	
11	502569	SCREW MA PAN PH M6-1.0x16 BK	8	8	8	8	
12	500472	WASHER LO INT .256x.478x.028 Z050	8	8	8	8	
13	502738	NUT SPR U M6-1.0 0.6-4.0	2	2	2	2	
13	504669	RIVET DRV BDG .187x.609 NYL	2	2	2	2	

From Y-7046 To 8-9339		Date:07/2024	PAGE:Y2-1410-00
STEERING GEAR BOX & DRAG LINK - INSTALLATION			

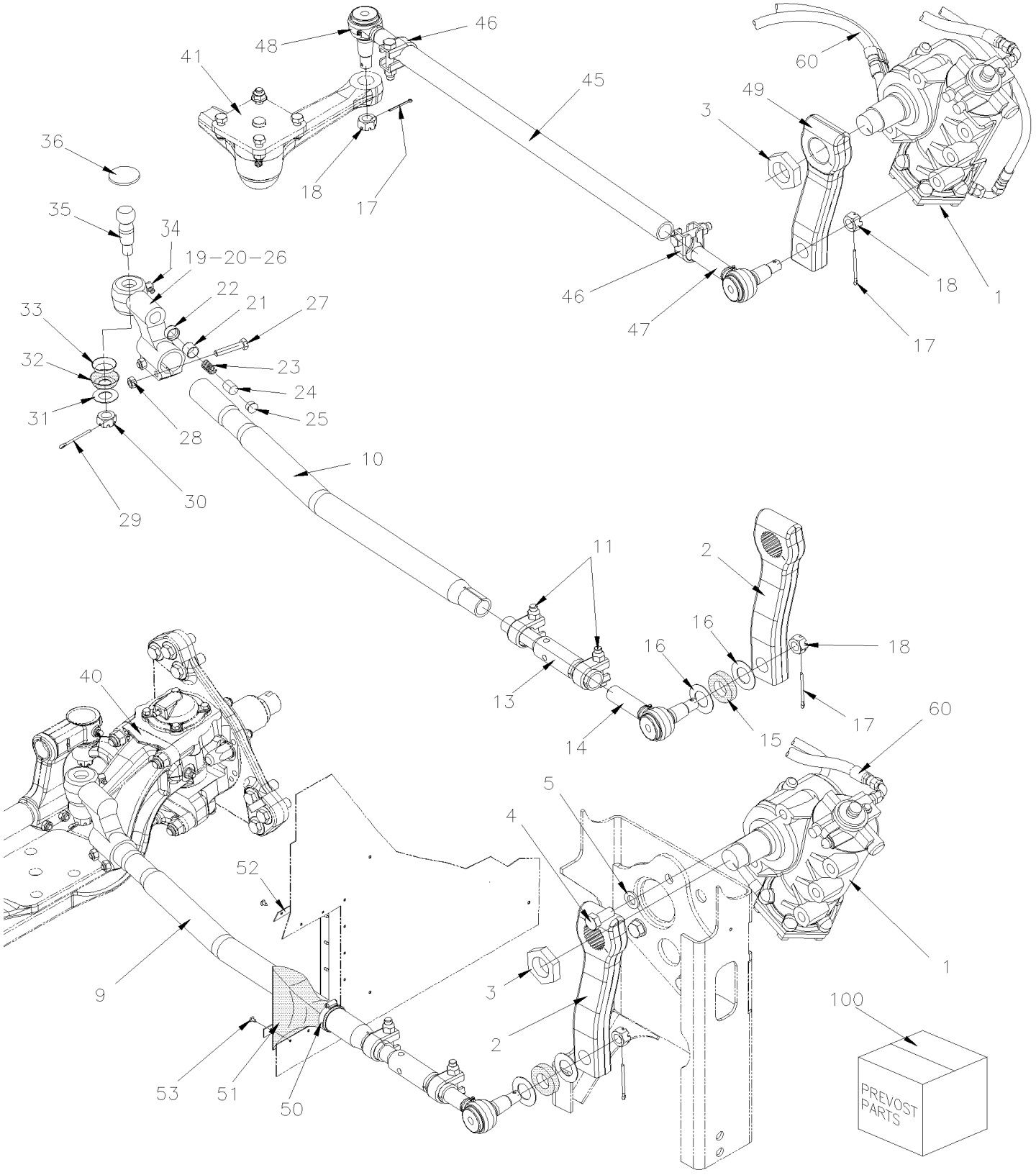

From Y-7046 To 8-9339		Date:07/2024	PAGE:Y2-1410-00
STEERING GEAR BOX & DRAG LINK - INSTALLATION			

From Y-7046 To 8-9339		Date:07/2024	PAGE:Y2-1410-00

STEERING GEAR BOX & DRAG LINK - INSTALLATION

Item#	Part	Description	XLII 45	XLII MTH40	XLII MTH45	XLII MTH45E	NOTES
1	**Y2-1415-00**	**STEERING GEARBOX - "ZF"**					
2	661046	ARM, PITMAN 270MM C/C 116.5° MARK INDEX	1	1	1	1	
3	661050	LOCKNUT M45X1.5 GEARBOX ZF	1	1	1	1	
4	5001494	SCREW CAP HEX M20-1.5x45 G10.9 Z050	5	5	5	5	
5	5001495	WASHER FL 21.0x37.0x4.0 ZP	5	5	5	5	
9	160959	DRAG LINK ASSY / 1329.5MM C/C	1				
10	160960	. ROD / W/1 CURVE / / W/ONE CURVE 975MM	1				
11	661133	. COLLAR ASSY / W/BOLT & NUT & STOPPER 1 5/8" I.D.	2				
. NS	500231	. . SCREW CAP HEX 5/8-11x3 G5 ZP	1				
. NS	500683	. . NUT HEX STO 5/8-11 ZP	1				
13	160932	. TURNBUCKLE 275MM	1				
14	661150	. TIE ROD END L.H. THREAD 1 1/4-12	1				
15	661135	. . RUBBER WASHER SEAL	1				
16	161989	. . WASHER FL 34.9x63.5x16GA SS	1				
17	502115	. . PIN, COTTER 3/16 x 2 1/2	2				
18	5001345	. . NUT HEX CSL THN 7/8-14	1				
19	610991	. TIE ROD ASSY / 3" OFFSET / L.H. THREAD M48-2	1				
20	N.S.P.	. . HOUSING / OFFSET L.H. THREAD M48-2	1				2
21	N.S.S.	. . RUBBING PAD / (7157/156)	1				1
22	N.S.S.	. . THRUST CUP / (7157/153)	1				1
23	N.S.S.	. . COMPRESSION SPRING / (5443/4)	1				1
24	N.S.S.	. . ADJUSTER PIECE / (5443/154)	1				1
25	680404	. . CAP PLUG	1				
26	502115	. . PIN, COTTER 3/16 x 2 1/2	1				
27	5001177	. . SCREW CAP HEX M12-1.75x60 G8.8 Z050	2				
28	500811	. . NUT HEX STO M12-1.75 G500	2				
29	502114	. . PIN, COTTER 5/32 x 2 1/2					
30	5001196	. . NUT HEX SLT 3/4-16	1				
31	161989	. . WASHER FL 34.9x63.5x16GA SS	2				
32	611057	. . RUBBER SEAL BOOT	1				
33	611056	. . DIRT SEAL PRESSING	1				
34	501495	. . GREASE FITTING 90º / 1/8 NPT	2				
35	N.S.S.	. . BALL STUD / (F4223/11)	1				1
36	N.S.S.	. . PLUG / (5247/155)	1				1
36	N.S.S.	. . SNAP RING / (ML7544/55N)	1				1
40	611031	STEERING ARM UPPER L.H. STREET SIDE	1				
		WITH INDEPENDENT FRONT SUSPENSION					
41	**Y2-1410-50**	**STEERING RODS - INSTALLATION W/INDEPENDENT "IS-84" / 16500LBS To 3-8464**					
41	**Y2-1410-51**	**STEERING RODS - INSTALLATION W/INDEPENDENT "NDIFS80P" / 18000LBS From 4-8165**	1	1	1	1	
45	661039	DRAG LINK ASSY / 970 MM C/C To Y-7386	1	1	1	1	

From Y-7046 To 8-9339		Date:07/2024	PAGE:Y2-1410-00

STEERING GEAR BOX & DRAG LINK - INSTALLATION

Item#	Part	Description	XLII 45	XLII MTH40	XLII MTH45	XLII MTH45E	NOTES
45	661067	DRAG LINK ASSY / 970 MM C/C From Y-7387 To 8-9301	1	1	1	1	
45	661134	DRAG LINK ASSY / 970 MM C/C WITH LONG NECK TIE ROD END From 8-9302 To 9-9596	1	1	1	1	L
45	661153	DRAG LINK ASSY / 970 MM C/C WITH LONG NECK TIE ROD END From 9-9597	1	1	1	1	L
45	N.P.N.	. ROD	1	1	1	1	4
46	660978	. COLLAR ASSY / W/BOLT & NUT 1 5/8" I.D. To 8-9301	1	1	1	1	
. NS	500231	. . SCREW CAP HEX 5/8-11x3 G5 ZP To 8-9301	1	1	1	1	
. NS	500683	. . NUT HEX STO 5/8-11 ZP To 8-9301	1	1	1	1	
46	661133	. COLLAR ASSY / W/BOLT & NUT & STOPPER 1 5/8" I.D. From 8-9302	2	2	2	2	
. NS	500231	. . SCREW CAP HEX 5/8-11x3 G5 ZP From 8-9302	1	1	1	1	
. NS	500683	. . NUT HEX STO 5/8-11 ZP From 8-9302	1	1	1	1	
47	611070	. TIE ROD END R.H. THREAD 1 1/4-12 To Y-7386	1	1	1	1	
47	611458	. TIE ROD END R.H. THREAD 1 1/4-12 From Y-7387	1	1	1	1	
47	N8892657	. TIE ROD END R.H. THREAD 1 1/4-12	1	1	1	1	S
47	661138	. TIE ROD END R.H. THREAD 1 1/4-12 From 8-9302 To 9-9596	1	1	1	1	
47	661152	. TIE ROD END R.H. THREAD 1 1/4-12 W/LONG NECK TIE ROD From 9-9597	1	1	1	1	LL
48	611071	. TIE ROD END L.H. THREAD 1 1/4-12 To Y-7386	1	1	1	1	
48	611459	. TIE ROD END L.H. THREAD 1 1/4-12 From Y-7387 To 8-9301	1	1	1	1	
48	661150	. TIE ROD END L.H. THREAD 1 1/4-12	1	1	1	1	S
48	661139	. TIE ROD END L.H. THREAD 1 1/4-12 From 8-9302 To 9-9596	1	1	1	1	
48	661151	. TIE ROD END L.H. THREAD 1 1/4-12 W/LONG NECK TIE ROD From 9-9597	1	1	1	1	LL
49	661047	ARM, PITMAN To 3-8464	1	1	1	1	
49	661760	ARM, PITMAN 9" / (PAINTED BLACK) From 4-8165	1	1	1	1	
50	504024	HOSE CLAMP / 1"13/16"-2"3/4 SS / HS-36	1	1	1	1	
51	160931	SHIELD RUBBER	1				
51	161009	SHIELD RUBBER	1	1	1	1	I
52	161120	COLLAR SHIELD RETAINER	1				
52	160994	COLLAR SHIELD RETAINER / "O" FORM CLOSED	1	1	1	1	I
53	500657	SCREW TC TR PH #10-24x1/2 Z050	16	16	16	16	
60	**Y2-1400-00**	**POWER STEERING HOSE - INSTALLATION**					
100	611101	KIT REPAIR / TIE ROD END USE KIT 161458	AR				A
100	161458	DRAG LINK ZF / SERVICE KIT	1				
. NS	660699	. DRAG LINK ASSY / 1320.5MM C/C	1				
. NS	502104	. PIN, COTTER 5/32 x 2	2				
. NS	IS-13009	. INSTRUCTION SHEET	1				
		A) ITEMS 21 TO 36					
		I) WITH INDEPENDENT SUSPENSION					
		L) THIS ASSY USE ONLY LONG NECK TIE ROD END # 661151 & # 661152					

From Y-7046 To 8-9339		Date:07/2024	PAGE:Y2-1410-00

STEERING GEAR BOX & DRAG LINK - INSTALLATION

Item#	Part	Description	XLII 45	XLII MTH40	XLII MTH45	XLII MTH45E	NOTES
		LL) USE ONLY WITH ASSY 661134 & 661153					
		S) SERVICE ON SHORT FORMER MODEL					
		1) NOT SOLD SEPARATELY					
		2) NOT SOLD BY PREVOST (SEE MANUFACTURING PART NUMBER AT END OF DESCRIPTION LINE)					
		4) NO PARTS NUMBER					

From Y-7046 To 3-8164		Date:07/2024	PAGE:Y2-1410-50
STEERING RODS - INSTALLATION W/INDEPENDENT "IS-84" / 16500LBS			

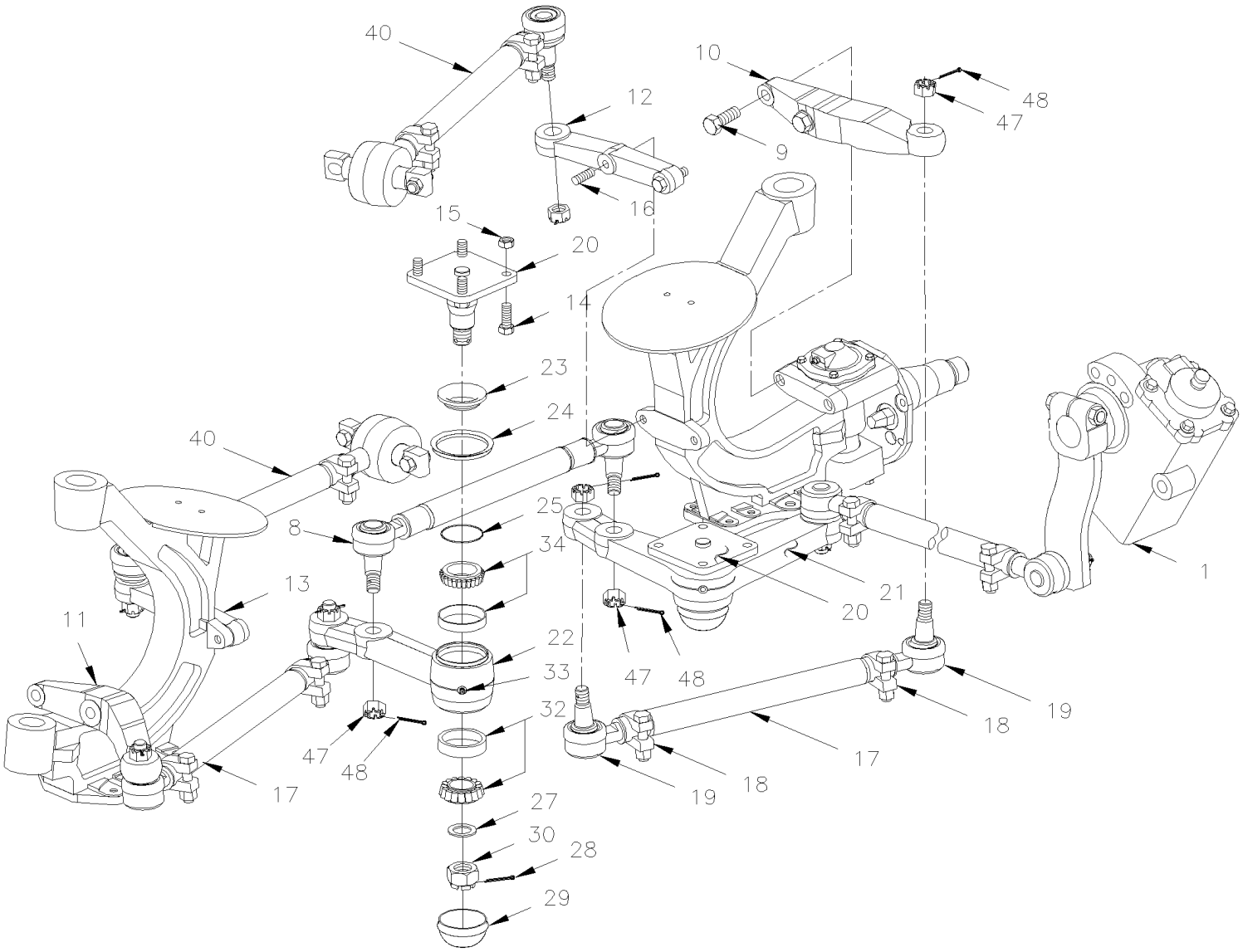

Tie Rods Identification
Standard
2005362 & 2005363 = Fitting Under
661150 & N8892657 = Fitting Side

Tie Rods Identification
With Long Neck
661138 & 661139 = Fitting Under
661151 & 661152 = Fitting Side

From Y-7046 To 3-8164		Date:07/2024	PAGE:Y2-1410-50

STEERING RODS - INSTALLATION W/INDEPENDENT "IS-84" / 16500LBS

Item#	Part	Description	XLII 45	XLII MTH40	XLII MTH45	XLII MTH45E	NOTES
1	**Y2-1415-00**	**STEERING GEARBOX - "ZF"**					
8	661015	ROD ASSY / 569MM C/C CENTER To 1-7625	1	1	1	1	
8	661077	ROD ASSY / 569MM C/C CENTER From 1-7626	1	1	1	1	
8	661131	ROD ASSY / 569MM C/C CENTER	1	1	1	1	
9	5001326	SCREW CAP HEX M14-2.0x70 G10.9 DP	1	1	1	1	
9	5001327	SCREW CAP HEX M14-2.0x80 G10.9 DP	1	1	1	1	
10	611124	STEERING ARM R.H. To 2-7851	1	1	1	1	
10	611264	STEERING ARM R.H. From 2-7852	1	1	1	1	A
11	611123	STEERING ARM L.H. To 2-7851	1	1	1	1	
11	611263	STEERING ARM L.H. From 2-7852	1	1	1	1	A
12	661071	UPRIGHT ARM L.H. / W/56 Deg	1	1	1	1	
13	661072	UPRIGHT ARM R.H. / W/56 Deg	1	1	1	1	
14	5001476	SCREW CAP HEX M14-2.0x45 G8.8 G500	8	8	8	8	
15	502538	NUT HEX STO M14-2.0 Z050	8	8	8	8	
16	611248	STUD M16	1	1	1	1	
16	611249	STUD M16	1	1	1	1	
NS	500781	NUT HEX STO M16-2.0 DP	2	2	2	2	
17	661024	ROD ASSY / 657MM C/C	2	2	2	2	
17	661129	ROD ASSY / 657MM C/C WITH LONG NECK TIE ROD END	1	1	1	1	R
17	N.P.N.	. ROD	1	1	1	1	4
18	660978	. COLLAR ASSY / W/BOLT & NUT 1 5/8" I.D.	2	2	2	2	
. NS	500231	. . SCREW CAP HEX 5/8-11x3 G5 ZP	1	1	1	1	
. NS	500683	. . NUT HEX STO 5/8-11 ZP	1	1	1	1	
18	661133	. COLLAR ASSY / W/BOLT & NUT & STOPPER 1 5/8" I.D.	2	2	2	2	
. NS	500231	. . SCREW CAP HEX 5/8-11x3 G5 ZP	1	1	1	1	
. NS	500683	. . NUT HEX STO 5/8-11 ZP	1	1	1	1	
19	611070	. TIE ROD END R.H. THREAD 1 1/4-12	1	1	1	1	
19	2005362	. TIE ROD END R.H. THREAD 1 1/4-12 SERVICE	1	1	1	1	S
19	661138	. TIE ROD END R.H. THREAD 1 1/4-12	1	1	1	1	RR
19	611071	. TIE ROD END L.H. THREAD 1 1/4-12	1	1	1	1	
19	2005363	. TIE ROD END L.H. THREAD 1 1/4-12 SERVICE	1	1	1	1	S
19	661139	. TIE ROD END L.H. THREAD 1 1/4-12	1	1	1	1	RR
20	160983	SPINDLE SHAFT	1	1	1	1	
NS	161005	SHIM 26GAGE 105MM C/C x 14MM slot	AR	AR	AR	AR	
20	161006	SHIM 20GAGE 105MM C/C x 14MM slot	AR	AR	AR	AR	
21	161020	LEVER L.H.	1	1	1	1	
22	161019	LEVER R.H.	1	1	1	1	
23	160984	SLEEVE WIPER 63.5MM O.D.	1	1	1	1	
24	507351	DUST SEAL 3.270 I.D. X 3.085 O.D.	1	1	1	1	
25	507350	OIL SEAL	1	1	1	1	
27	5001227	WASHER FL .453x.875x.090	1	1	1	1	
28	502115	PIN, COTTER 3/16 x 2 1/2	1	1	1	1	

From Y-7046 To 3-8164		Date:07/2024	PAGE:Y2-1410-50

STEERING RODS - INSTALLATION W/INDEPENDENT "IS-84" / 16500LBS

Item#	Part	Description	XLII 45	XLII MTH40	XLII MTH45	XLII MTH45E	NOTES
29	661014	COVER	1	1	1	1	
30	5001218	NUT HEX CSL M30-1.5	1	1	1	1	
32	507354	KIT, CUP & CONE BEARING	2	2	2	2	
33	501490	GREASE FITTING / 1/8 NPT	1	1	1	1	
34	507353	KIT, CUP & CONE BEARING	2	2	2	2	
40	**Y2-1605-50**	**FRONT AXLE - INSTALL W/INDEPENDENT "IS-84" / 16500LBS**					
47	5001345	NUT HEX CSL THN 7/8-14	1	1	1	1	
48	502104	PIN, COTTER 5/32 x 2	1	1	1	1	
NS	161009	SHIELD RUBBER	1	1	1	1	
NS	160994	COLLAR SHIELD RETAINER / "O" FORM CLOSED	1	1	1	1	
NS	500657	SCREW TC TR PH #10-24x1/2 Z050	12	12	12	12	
NS	504024	HOSE CLAMP / 1"13/16"-2"3/4 SS / HS-36	1	1	1	1	
		A) USE WITH AXLE 3° CASTER					
		R) THIS ASSY USE ONLY LONG NECK TIE ROD END # 661138 & # 661139					
		RR) USE ONLY WITH ASSY # 661129					
		S) SERVICE ON SHORT FORMER MODEL					
		4) NO PARTS NUMBER					

From 4-8165 To 8-9339		Date:07/2024	PAGE:Y2-1410-51
STEERING RODS - INSTALLATION W/INDEPENDENT "NDIFS80P" / 18000LBS			

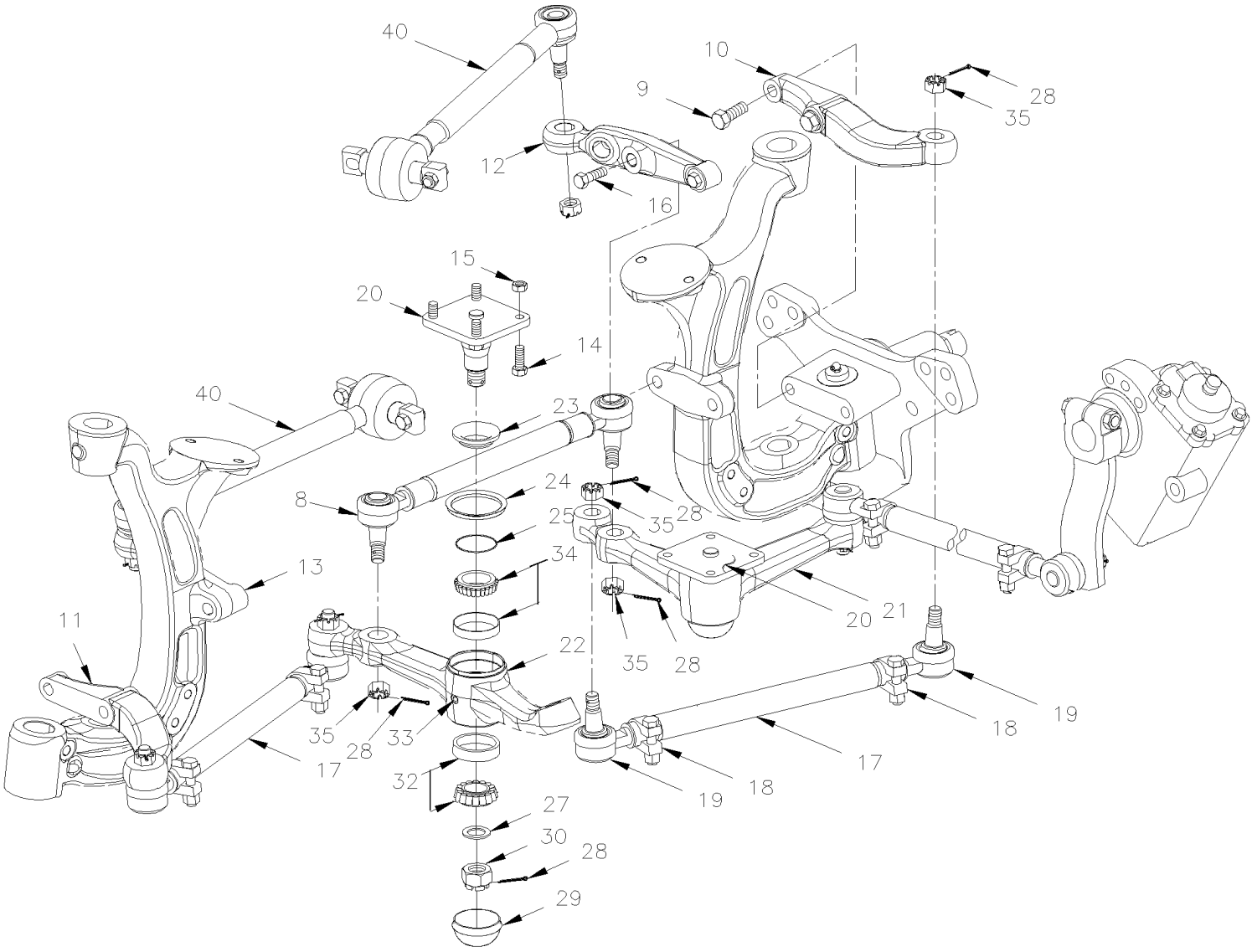

From 4-8165 To 8-9339		Date:07/2024	PAGE:Y2-1410-51
STEERING RODS - INSTALLATION W/INDEPENDENT "NDIFS80P" / 18000LBS			

From 4-8165 To 8-9339		Date:07/2024	PAGE:Y2-1410-51

STEERING RODS - INSTALLATION W/INDEPENDENT "NDIFS80P" / 18000LBS

Item#	Part	Description	XLII 45	XLII MTH40	XLII MTH45	XLII MTH45E	NOTES
1	**Y2-1415-00**	**STEERING GEARBOX - "ZF"**					
8	661083	ROD ASSY / 591.8MM C/C CENTER To 8-9301	1	1	1	1	
8	661132	ROD ASSY / 591.8MM C/C CENTER From 8-9302	1	1	1	1	
9	5001326	SCREW CAP HEX M14-2.0x70 G10.9 DP	1	1	1	1	
NS	5001327	SCREW CAP HEX M14-2.0x80 G10.9 DP	1	1	1	1	
10	163246	STEERING ARM L.H.	1	1	1	1	
10	612084	STEERING ARM L.H.	1	1	1	1	
11	163468	STEERING ARM R.H.	1	1	1	1	
11	612085	STEERING ARM R.H.	1	1	1	1	
12	661080	UPRIGHT ARM L.H / W/56 Deg To 6-8832	1	1	1	1	
12	661113	UPRIGHT ARM L.H / W/58 Deg From 6-8833	1	1	1	1	
13	661081	UPRIGHT ARM R.H / W/56 Deg To 6-8832	1	1	1	1	
13	661114	UPRIGHT ARM R.H / W/58 Deg From 6-8833	1	1	1	1	
14	5001476	SCREW CAP HEX M14-2.0x45 G8.8 G500	8	8	8	8	
15	502538	NUT HEX STO M14-2.0 Z050	8	8	8	8	
16	611305	SCREW CAP HEX M20-2.5x60 G12.9	1	1	1	1	
16	611307	SCREW CAP HEX M20-2.5x80 G12.9	1	1	1	1	
17	661024	ROD ASSY / 657MM C/C To 8-9301	2	2	2	2	
17	661129	ROD ASSY / 657MM C/C WITH LONG NECK TIE ROD END From 8-9302	2	2	2	2	R
17	N.P.N.	. ROD	1	1	1	1	4
18	660978	. COLLAR ASSY / W/BOLT & NUT 1 5/8" I.D. To 8-9301	2	2	2	2	
. NS	500231	. . SCREW CAP HEX 5/8-11x3 G5 ZP To 8-9301	1	1	1	1	
. NS	500683	. . NUT HEX STO 5/8-11 ZP To 8-9301	1	1	1	1	
18	661133	. COLLAR ASSY / W/BOLT & NUT & STOPPER 1 5/8" I.D. From 8-9302	2	2	2	2	
. NS	500231	. . SCREW CAP HEX 5/8-11x3 G5 ZP From 8-9302	1	1	1	1	
. NS	500683	. . NUT HEX STO 5/8-11 ZP From 8-9302	1	1	1	1	
19	611070	. TIE ROD END R.H. THREAD 1 1/4-12 To 8-9301	1	1	1	1	
19	2005362	. TIE ROD END R.H. THREAD 1 1/4-12 SERVICE	1	1	1	1	S
19	661138	. TIE ROD END R.H. THREAD 1 1/4-12 From 8-9302	1	1	1	1	RR
19	611071	. TIE ROD END L.H. THREAD 1 1/4-12 To 8-9301	1	1	1	1	
19	661139	. TIE ROD END L.H. THREAD 1 1/4-12 From 8-9302	1	1	1	1	RR
19	2005363	. TIE ROD END L.H. THREAD 1 1/4-12 SERVICE	1	1	1	1	S
20	160983	SPINDLE SHAFT	1	1	1	1	
NS	161005	SHIM 26GAGE 105MM C/C x 14MM slot	AR	AR	AR	AR	
NS	161006	SHIM 20GAGE 105MM C/C x 14MM slot	AR	AR	AR	AR	
21	161169	LEVER L.H.	1	1	1	1	
22	161170	LEVER R.H.	1	1	1	1	
23	160984	SLEEVE WIPER 63.5MM O.D.	1	1	1	1	
24	507351	DUST SEAL 3.270 I.D. X 3.085 O.D.	1	1	1	1	
25	507350	OIL SEAL	1	1	1	1	
27	5001227	WASHER FL .453x.875x.090	1	1	1	1	
28	502115	PIN, COTTER 3/16 x 2 1/2	1	1	1	1	

From 4-8165 To 8-9339		Date:07/2024	PAGE:Y2-1410-51

STEERING RODS - INSTALLATION W/INDEPENDENT "NDIFS80P" / 18000LBS

Item#	Part	Description	XLII 45	XLII MTH40	XLII MTH45	XLII MTH45E	NOTES
29	661014	COVER	1	1	1	1	
30	5001218	NUT HEX CSL M30-1.5	1	1	1	1	
32	507354	KIT, CUP & CONE BEARING	2	2	2	2	
33	501490	GREASE FITTING / 1/8 NPT	1	1	1	1	
34	507353	KIT, CUP & CONE BEARING	2	2	2	2	
35	5001345	NUT HEX CSL THN 7/8-14	1	1	1	1	
40	**Y2-1605-51**	**FRONT AXLE - INSTALL W/INDEPENDENT "NDIFS80P" / 18000LBS**					
NS	161009	SHIELD RUBBER	1	1	1	1	
NS	160994	COLLAR SHIELD RETAINER / "O" FORM CLOSED	1	1	1	1	
NS	500657	SCREW TC TR PH #10-24x1/2 Z050	12	12	12	12	
NS	504024	HOSE CLAMP / 1"13/16"-2"3/4 SS / HS-36	1	1	1	1	
		R) THIS ASSY USE ONLY LONG NECK TIE ROD END # 661138 & # 661139					
		RR) USE ONLY WITH ASSY # 661129					
		S) SERVICE ON SHORT FORMER MODEL					
		4) NO PARTS NUMBER					

From Y-7046 To 6-8906		Date:07/2024	PAGE:Y2-1412-00
STEERING DAMPER			

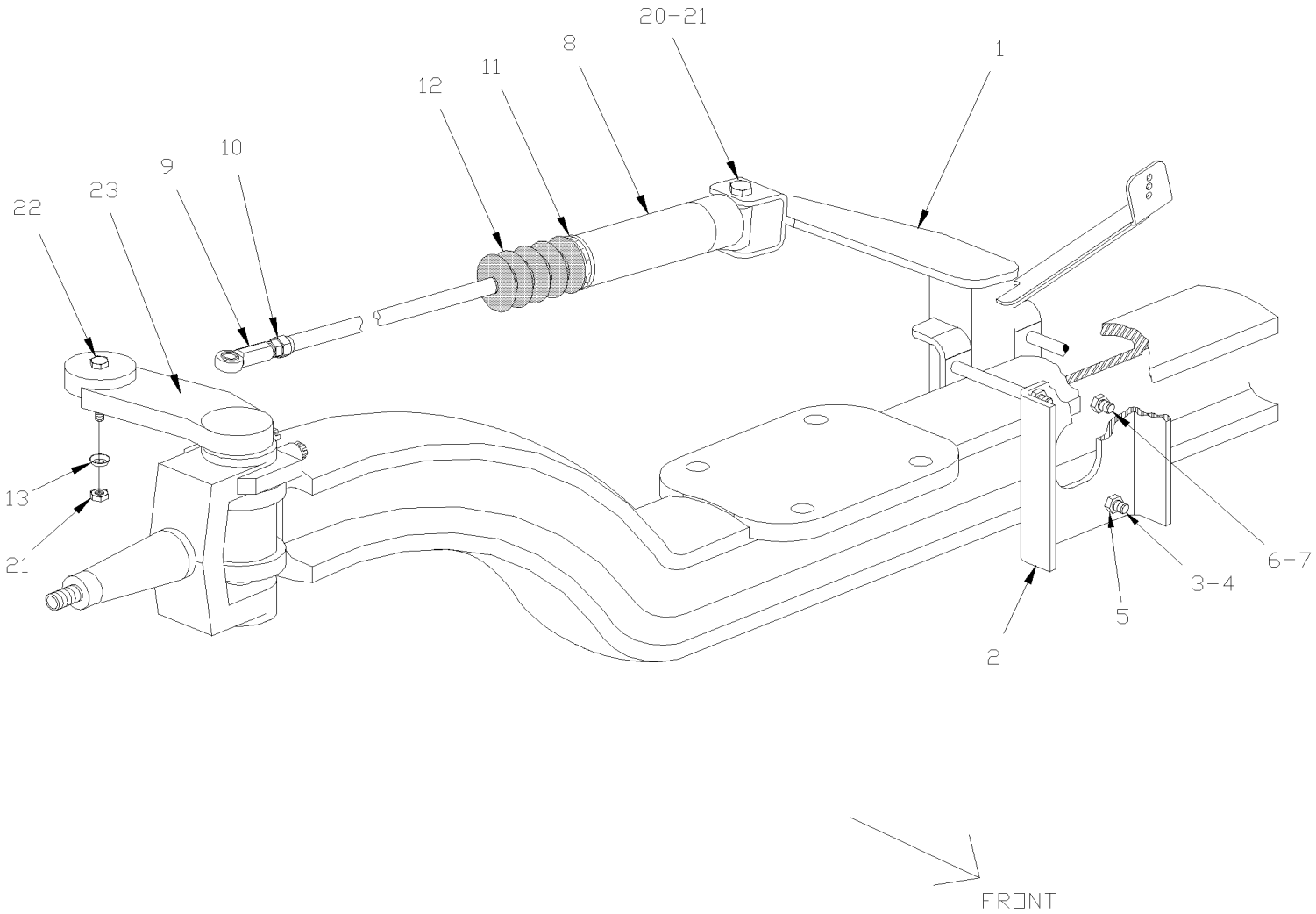

From Y-7046 To 6-8906		Date:07/2024	PAGE:Y2-1412-00

STEERING DAMPER

Item#	Part	Description	XLII 45	XLII MTH40	XLII MTH45	XLII MTH45E	NOTES
1	110741	ATTACHMENT CYLINDER	1				
2	110749	ATTACHMENT PLATE	1				
3	5001500	SCREW CAP HEX M10-1.5x120 G10.9 N500	4				
4	500444	WASHER FL .406x.812x.065 Z050	8				
5	500680	NUT HEX STO M10-1.5 Z050	4				
6	502731	SCREW CAP HEX M12-1.75x40 G8.8 Z050	1				
7	500811	NUT HEX STO M12-1.75 G500	1				
8	160835	DAMPER SHOCK ASS	1				
. NS	IS-96052A	. SEE INSTRUCTION SHEET	1				
8	660979	. DAMPER SHOCK	1				
9	660884	. . ROD END FEMALE ¾"-16 / 3/4 I.D.	1				
9	501497	. . . GREASE FITTING / 1/4-28	1				
10	500734	. . NUT HEX JAM 3/4-16 Z050	1				
11	504023	. HOSE CLAMP / 1"5/16-2"1/4 SS / HS-28	1				
12	661007	. BOOT PROTECTOR	1				
13	660980	. COVER ROD END / RUBBER	2				
20	500509	SCREW CAP HEX 3/4-16x3 G5 Z050	1				
21	500735	NUT HEX STO 3/4-16 ZP	1				
22	500145	SCREW CAP HEX 3/4-16x3 1/2 G5 Z050	1				
23	161033	STEERING ARM UPPER R.H. CURBSIDE	1				

From Y-7046 To 8-9339		Date:07/2024	PAGE:Y2-1415-00
STEERING GEARBOX - "ZF"			

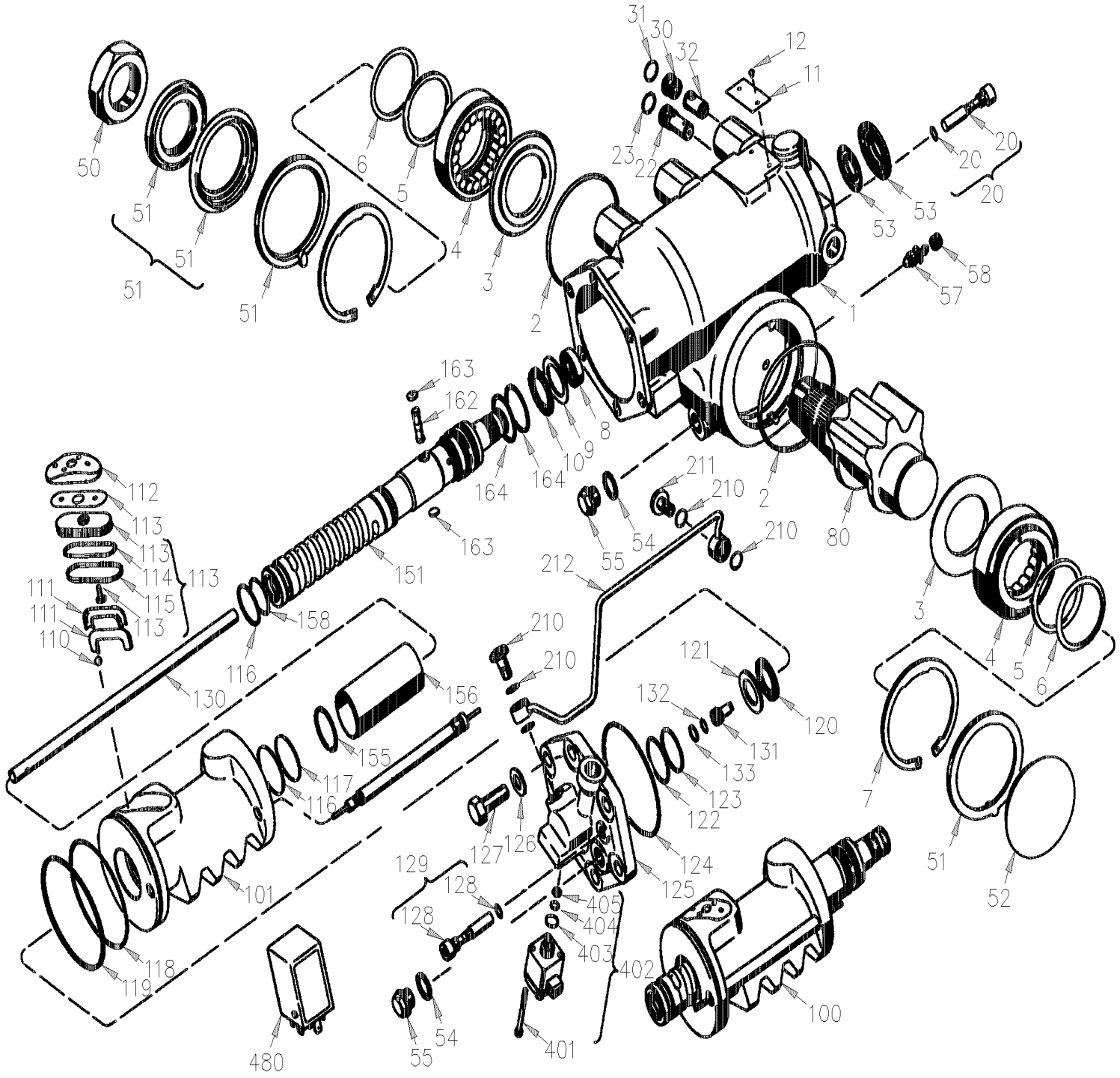

MODEL "ZF" – SERVOCOMTRONIC

From Y-7046 To 8-9339		Date:07/2024	PAGE:Y2-1415-00
STEERING GEARBOX - "ZF"			

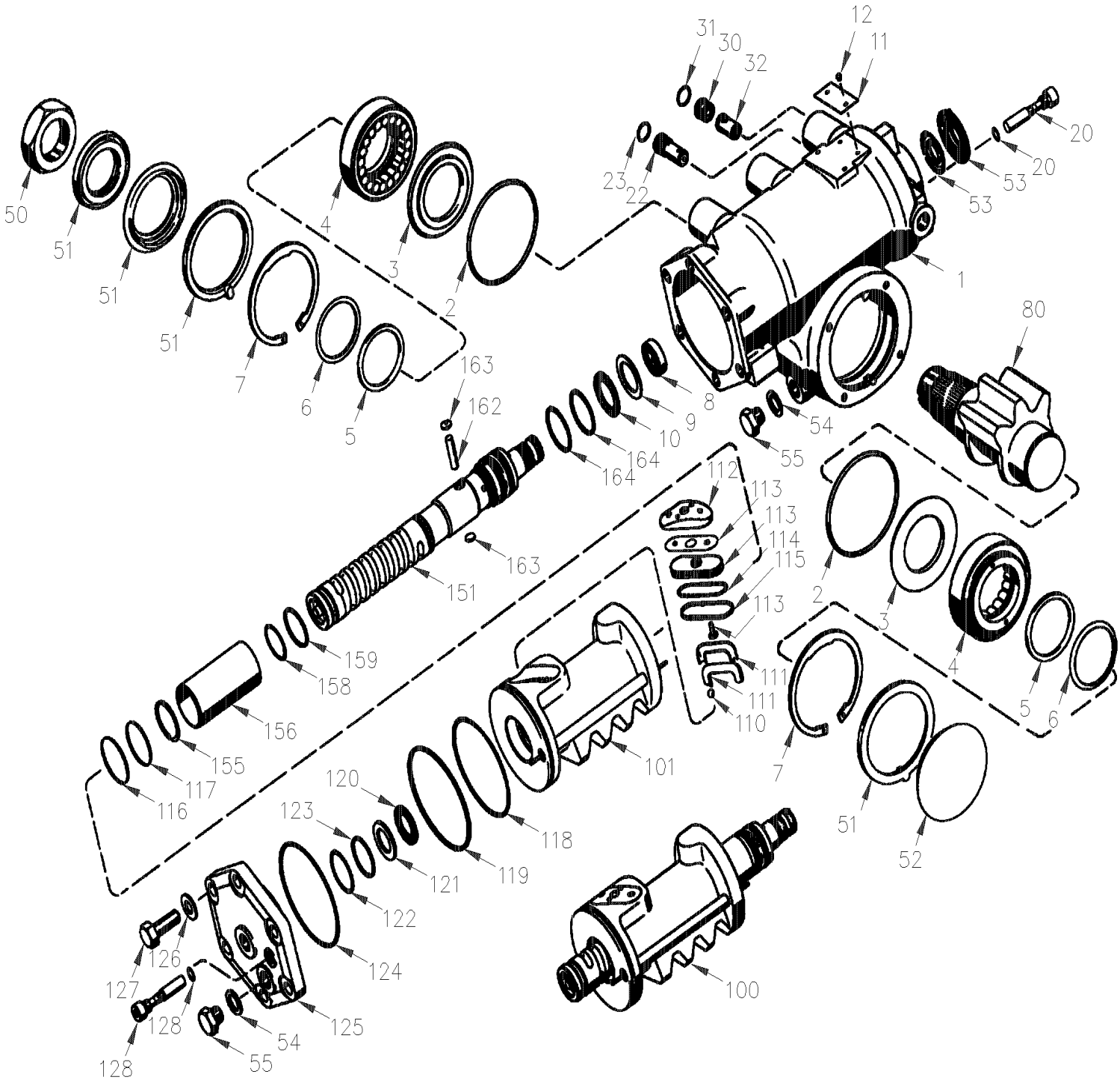

MODEL "ZF" – SEVOCOM

From Y-7046 To 8-9339		Date:07/2024	PAGE:Y2-1415-00

STEERING GEARBOX - "ZF"

Item#	Part	Description	XLII 45	XLII MTH40	XLII MTH45	XLII MTH45E	NOTES
	661044	GEARBOX STEERING "ZF" W/VARIABLE STEERING ASSISTANCE "SERVOCOMTRONIC"	1	1	1	1	
	661045	GEARBOX STEERING "ZF"	1	1	1	1	
1	N.P.N.	. HOUSING	1	1	1	1	4
2	N.P.N.	. O-RING	1	1	1	1	4
3	N.P.N.	. WASHER	1	1	1	1	4
4	N.P.N.	. HOUSING COVER	1	1	1	1	4
5	N.P.N.	. GASKET	1	1	1	1	4
6	N.P.N.	. SUPPORT RING	1	1	1	1	4
7	N.P.N.	. RETAINING RING	1	1	1	1	4
8	N.P.N.	. SHAFT SEAL	1	1	1	1	4
9	N.P.N.	. AXIAL-, WASHER	1	1	1	1	4
10	N.P.N.	. NEEDLE CAGE	1	1	1	1	4
11	N.P.N.	. TYPE PLATE	1	1	1	1	4
12	N.P.N.	. GROOVED STUD	1	1	1	1	4
20	N.P.N.	. SET SCREW / ADJUSTING SCREW / SCREW	1	1	1	1	4
20	N.P.N.	. O-RING	1	1	1	1	4
21	N.P.N.	. COLLAR NUT	1	1	1	1	4
22	N.P.N.	. VALVE INSERT	1	1	1	1	4
23	N.P.N.	. O-RING	1	1	1	1	4
30	N.P.N.	. SCREW	1	1	1	1	4
31	N.P.N.	. O-RING	1	1	1	1	4
32	N.P.N.	. VALVE INSERT	1	1	1	1	4
50	661050	. LOCKNUT M45X1.5 GEARBOX ZF	1	1	1	1	
51	N.P.N.	. DUST SEAL	1	1	1	1	4
51	N.P.N.	. STOP-RING	1	1	1	1	4
51	N.P.N.	. GASKET	1	1	1	1	4
51	N.P.N.	. DUST SEAL	1	1	1	1	4
52	N.P.N.	. PLUG	1	1	1	1	4
53	N.P.N.	. PROTECTING CAP	1	1	1	1	4
53	N.P.N.	. GASKET	1	1	1	1	4
54	N.P.N.	. SEALING RING	1	1	1	1	4
55	N.P.N.	. SCREW PLUG	1	1	1	1	4
56	N.P.N.	. PROTECTING SLEEVE	1	1	1	1	4
57	N.P.N.	. BREATHER	1	1	1	1	4
58	N.P.N.	. PROTECTING CAP	1	1	1	1	4
80	661102	. SECTOR SHAFT	1	1	1	1	
100	661103	. PISTON	1				
100	661104	. PISTON		1	1	1	
101	N.P.N.	. PISTON	1	1	1	1	4
110	N.P.N.	. BALL SET	1	1	1	1	4
111	N.P.N.	. RECIRCULATING HALF TUBE	1	1	1	1	4
112	N.P.N.	. GASKET / PLUG	1	1	1	1	4

From Y-7046 To 8-9339		Date:07/2024	PAGE:Y2-1415-00

STEERING GEARBOX - "ZF"

Item#	Part	Description	XLII 45	XLII MTH40	XLII MTH45	XLII MTH45E	NOTES
113	N.P.N.	. GASKET	1	1	1	1	4
113	N.P.N.	. COMPENSATING PLATE	1	1	1	1	4
113	N.P.N.	. PIN	1	1	1	1	4
114	N.P.N.	. O-RING	1	1	1	1	4
115	N.P.N.	. SEALING RING	1	1	1	1	4
116	N.P.N.	. SEALING RING	1	1	1	1	4
117	N.P.N.	. SEALING RING	1	1	1	1	4
118	N.P.N.	. O-RING	1	1	1	1	4
119	N.P.N.	. GASKET	1	1	1	1	4
120	N.P.N.	. NEEDLE CAGE	1	1	1	1	4
121	N.P.N.	. WASHER	1	1	1	1	4
122	N.P.N.	. O-RING	1	1	1	1	4
123	N.P.N.	. SEALING RING	1	1	1	1	4
124	N.P.N.	. O-RING	1	1	1	1	4
125	N.P.N.	. CYLINDER COVER	1	1	1	1	4
126	N.P.N.	. WASHER	1	1	1	1	4
127	N.P.N.	. HEXAGON SCREW	1	1	1	1	4
128	N.P.N.	. SET SCREW / SCREW	1	1	1	1	4
128	N.P.N.	. O-RING	1	1	1	1	4
129	N.P.N.	. COLLAR NUT	1	1	1	1	4
130	N.P.N.	. PIPE	1	1	1	1	4
131	N.P.N.	. REACTION PISTON	1	1	1	1	4
132	N.P.N.	. O-RING	1	1	1	1	4
133	N.P.N.	. SEALING RING	1	1	1	1	4
151	N.P.N.	. WORM	1	1	1	1	4
155	N.P.N.	. SNAP RING	1	1	1	1	4
156	N.P.N.	. SLIDING TUBE	1	1	1	1	4
158	N.P.N.	. O-RING	1	1	1	1	4
159	N.P.N.	. SEALING RING	1	1	1	1	4
162	N.P.N.	. PIN	1	1	1	1	4
163	N.P.N.	. PLUG	1	1	1	1	4
164	N.P.N.	. SEALING RING	1	1	1	1	4
210	661105	. O-RING		1	1	1	
211	661106	. UNION SCREW		1	1	1	
212	661107	. PIPE		1	1	1	
401	N.P.N.	. CAP SCREW	1	1	1	1	4 B
402	661108	. CONVERTER		1	1	1	B
403	N.P.N.	. O-RING	1	1	1	1	4 B
404	N.P.N.	. O-RING	1	1	1	1	4 B
405	N.P.N.	. OIL SCREEN	1	1	1	1	4 B
480	563033	. E.C.U. / W/STEERING ASSIST (STP 272 or 330) ((77//125))	1	1	1	1	B
480	563465	. E.C.U. / W/STEERING ASSIST W/"ZF" TRANS ONLY (STP 146)	1				B

From Y-7046 To 8-9339		Date:07/2024	PAGE:Y2-1415-00

STEERING GEARBOX - "ZF"

Item#	Part	Description	XLII 45	XLII MTH40	XLII MTH45	XLII MTH45E	NOTES
NS	661109	KIT, SEAL REPAIR MAJOR	1				A
. NS	85109281	. KIT, SEAL REPAIR MAJOR	1				A
NS	661110	KIT, SEAL REPAIR MAJOR / W/SERVOCOMTRONIC		1	1	1	B
. NS	85109291	. KIT, SEAL REPAIR MAJOR / W/SERVOCOMTRONIC		1	1	1	B
		A) USE WITH #661045					
		B) USE WITH #661044					
		4) NO PARTS NUMBER					

From Y-7046 To 8-9339		Date:07/2024	PAGE:Y2-1420-00
POWER STEERING TANK - 4 QT U.S.			

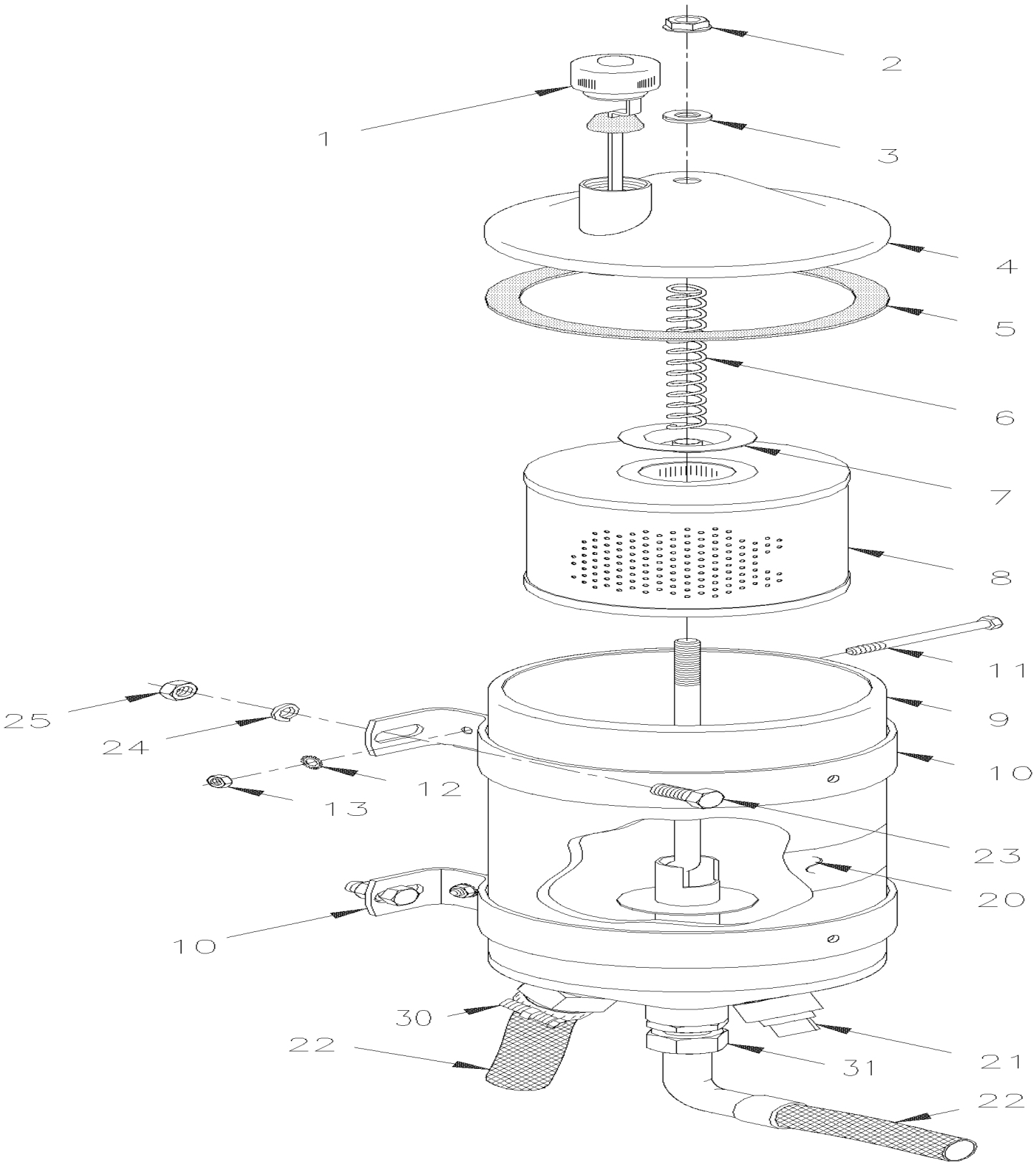

From Y-7046 To 8-9339		Date:07/2024	PAGE:Y2-1420-00

POWER STEERING TANK - 4 QT U.S.

Item#	Part	Description	XLII 45	XLII MTH40	XLII MTH45	XLII MTH45E	NOTES
	660982	TANK ASSY 4QT U.S.	1	1	1	1	
	661060	TANK ASSY 4QT US / WITH SIGHT GLASS	1	1	1	1	
1	660985	. DIPSTICK	1	1	1	1	
2	N.S.P.	. WING NUT 3/8-16	1	1	1	1	2
3	19512588	. WASHER	1	1	1	1	
4	660989	. COVER ASSY	1	1	1	1	
5	660986	. GASKET	1	1	1	1	
6	660991	. SPRING, COMP.	1	1	1	1	
7	N8886469	. WASHER, RETAINER	1	1	1	1	
8	660987	. ELEMENT FILTER	1	1	1	1	
9		. TANK	1	1	1	1	
10	660988	. ATTACHMENT SUPPORT	2	2	2	2	
20	160370	DECAL "OIL DEXTRON"	1	1	1	1	
21	501306	PLUG SQUARE HEAD / PIPE FITTING / 1/2NPT-M BR	1	1	1	1	
22	**Y2-1400-00**	**POWER STEERING HOSE - INSTALLATION**					
23	502559	SCREW CAP HEX M10-1.5x25 G8.8 Z050	4	4	4	4	
24	502644	WASHER FL 10.5x30.0x2.5 Z050	4	4	4	4	
NS	500257	WASHER LO SPT 10.2x18.1x2.2 Z050	4	4	4	4	
25	500256	NUT HEX M10-1.5 Z050	4	4	4	4	
30	5011086	MALE CONNECTOR / PUSH-LOK FITTING / 1NPT-Mx#16 STL	1	1	1	1	
31	501739	MALE CONNECTOR / JIC 37° FITTING / #8JIC-Mx1/2NPT-M STL	1	1	1	1	
		2) NOT SOLD BY PREVOST (SEE MANUFACTURING PART NUMBER AT END OF DESCRIPTION LINE)					

From Y-7046 To 8-9339		Date:07/2024	PAGE:Y2-1427-00
POWER STEERING PUMP - "TRW"			

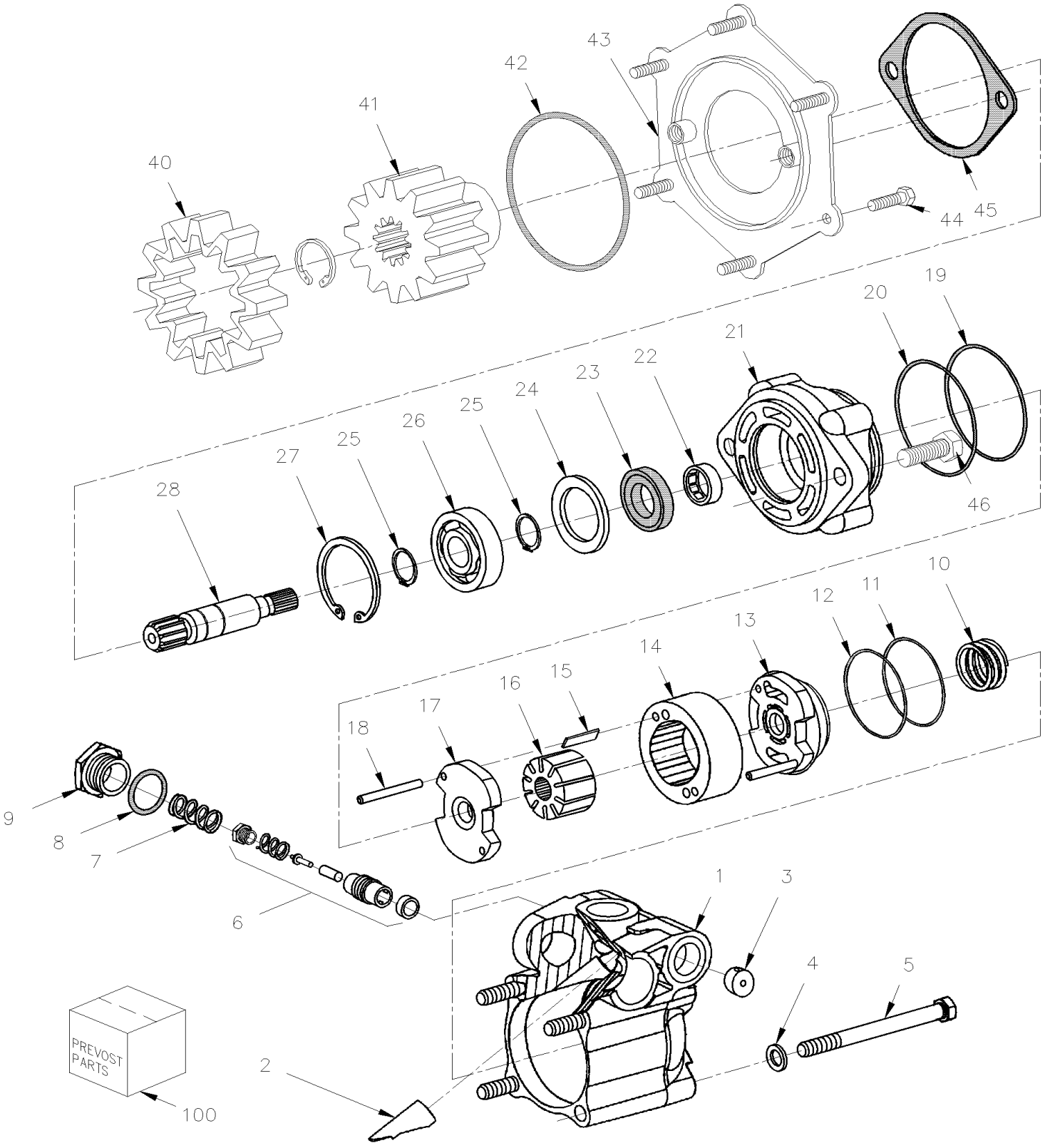

From Y-7046 To 8-9339		Date:07/2024	PAGE:Y2-1427-00

POWER STEERING PUMP - "TRW"

Item#	Part	Description	XLII 45	XLII MTH40	XLII MTH45	XLII MTH45E	NOTES
	661009	PUMP ASSY	1				
	661070	PUMP ASSY To 3-8164		1	1	1	
	661092	PUMP ASSY From 4-8165		1	1	1	
1	N.S.S.	. HOUSING	1	1	1	1	1
2	N.S.S.	. BOOST TUBE	1	1	1	1	1
3	N.S.S.	. ORIFICE	1	1	1	1	1
4	N.S.S.	. BOLTS	1	1	1	1	1
5	N.S.S.	. WASHERS	1	1	1	1	1
6	N.S.S.	. VALVE SPOOL ASSY	1	1	1	1	1
6	N.S.S.	. . SPOOL	1	1	1	1	1
6	N.S.S.	. . SPRING	1	1	1	1	1
6	N.S.S.	. . POPPET	1	1	1	1	1
6	N.S.S.	. . SHIMS	1	1	1	1	1
6	N.S.S.	. . RELIEF VALVE SEAT ASSY	1	1	1	1	1
7	N.S.S.	. SPRING	1	1	1	1	1
8	N.S.S.	. O-RING	1	1	1	1	1
9	N.S.S.	. PLUG	1	1	1	1	1
10	N.S.S.	. SPRING	1	1	1	1	1
11	N.S.S.	. O-RING	1	1	1	1	1
12	N.S.S.	. BACKUP RING	1	1	1	1	1
13	N.S.S.	. TOP PLATE	1	1	1	1	1
14	N.S.S.	. CAM RING	1	1	1	1	1
15	N.S.S.	. VANES	1	1	1	1	1
16	N.S.S.	. ROTOR	1	1	1	1	1
17	N.S.S.	. BOTTOM PLATE	1	1	1	1	1
18	N.S.S.	. LOCATING PINS	1	1	1	1	1
19	N.S.S.	. O-RING	1	1	1	1	1
20	N.S.S.	. O-RING	1	1	1	1	1
21	N.S.S.	. COVER	1	1	1	1	1
22	N.S.S.	. NEEDLE BEARING	1	1	1	1	1
23	N.S.S.	. SHAFT SEAL	1	1	1	1	1
24	N.S.S.	. SPACER	1	1	1	1	1
25	N.S.S.	. RETAINING RING	2	2	2	2	1
26	N.S.S.	. BALL BEARING	1	1	1	1	1
27	N.S.S.	. RETAINING RING	1	1	1	1	1
28	661011	. INPUT SHAFT	1	1	1	1	
40	510438	COUPLING DRIVE	1	1	1	1	
41	510437	SPROCKET ASSY W/SNAP-RING	1	1	1	1	
42	N.S.P.	O-RING / (08929289)	1	1	1	1	2
43	N.S.P.	ADAPTOR COVER / (11514329)	1	1	1	1	2
44	N.S.P.	SCREW M8-1.25 X 30MM / (11514329) 500544	5	5	5	5	2
44	N.S.P.	SCREW M8-1.25 X 30MM / (11505299)	1	1	1	1	2

From Y-7046 To 8-9339		Date:07/2024	PAGE:Y2-1427-00

POWER STEERING PUMP - "TRW"

Item#	Part	Description	XLII 45	XLII MTH40	XLII MTH45	XLII MTH45E	NOTES
45	510488	GASKET	1	1	1	1	
100	661012	KIT REPAIR	AR	AR	AR	AR	A
		A) INCLUDE ITEMS #8,11,12,19,20 & 23					
		1) NOT SOLD SEPARATELY					
		2) NOT SOLD BY PREVOST (SEE MANUFACTURING PART NUMBER AT END OF DESCRIPTION LINE)					

From 4-8165 To 8-9339		Date:07/2024	PAGE:Y2-1430-50
CYLINDER POWER STEERING			

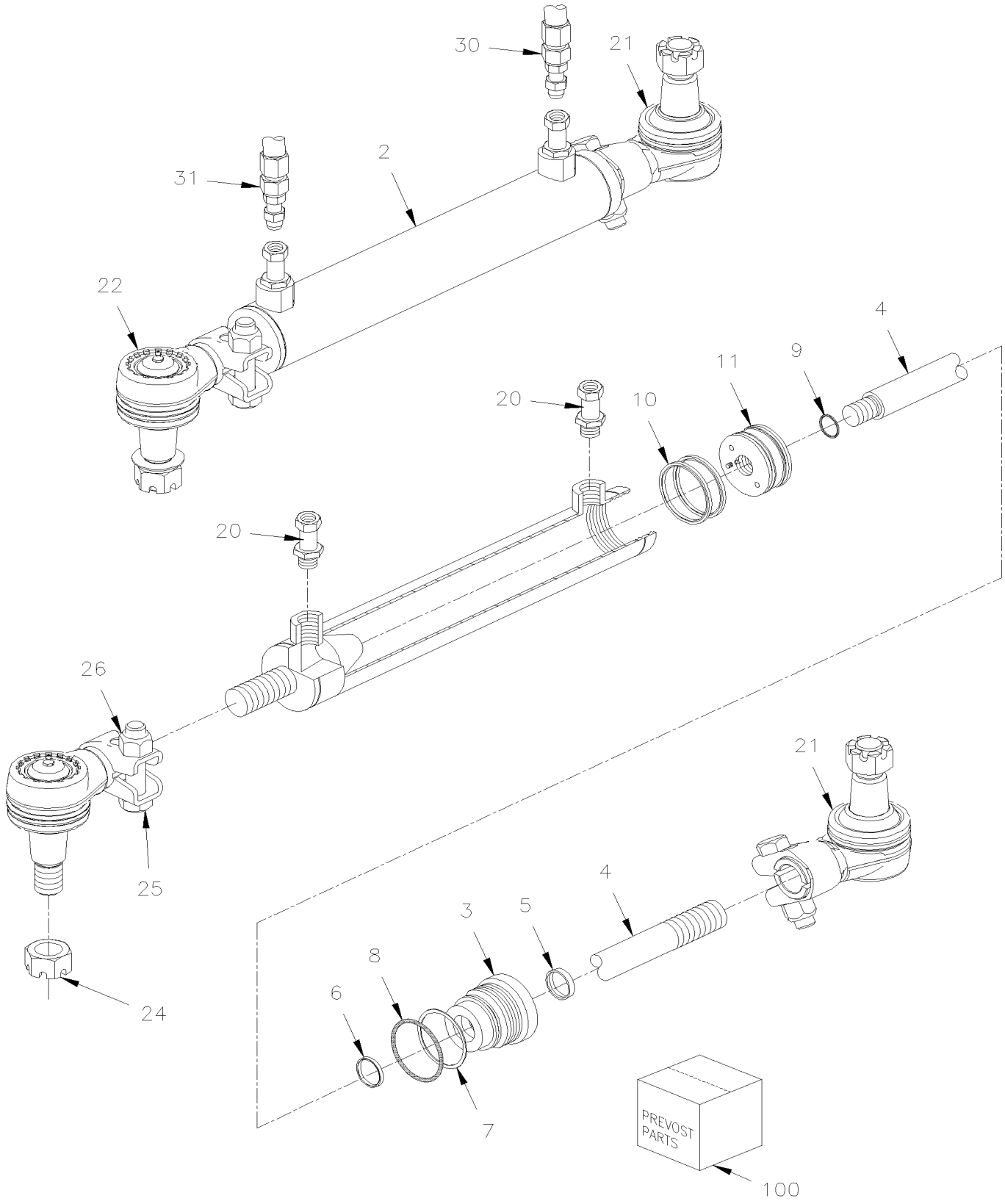

From 4-8165 To 8-9339		Date:07/2024	PAGE:Y2-1430-50

CYLINDER POWER STEERING

Item#	Part	Description	XLII 45	XLII MTH40	XLII MTH45	XLII MTH45E	NOTES
1	661076	CYLINDER ASSY PRESSURE 160bar		1	1	1	
2	N.S.S.	. TUBE		1	1	1	1
3	661098	. HEAD		1	1	1	
4	661097	. ROD		1	1	1	
5	N.S.S.	. WIPER ROD		1	1	1	1
6	N.S.S.	. SEAL ROD		1	1	1	1
7	N.S.S.	. BACK-UP		1	1	1	1
8	N.S.S.	. O-RING		1	1	1	1
9	N.S.S.	. O-RING		1	1	1	1
10	N.S.S.	. SEAL PISTON		2	2	2	1
11	661099	. PISTON		1	1	1	
20	501593	MALE CONNECTOR / JIC 37° FITTING / #8JIC-Mx#8ORB-M STL		2	2	2	
21	611275	END ASSY / STRUCTURE SIDE		1	1	1	
22	611469	END ASSY / ROD SIDE		1	1	1	
24	5001345	NUT HEX CSL THN 7/8-14		1	1	1	
25	N.P.N.	SCREW CAP HEX ZP 1/2-20X2.25 G8		2	2	2	4
26	N.P.N.	NUT HEX 1/2-20 G8		2	2	2	4
30	163470	HOSE ASSY / #8 1648MM		1	1	1	
31	163469	HOSE ASSY / #8 1648MM		1	1	1	
NS	161177	HOSE RETAINER BLOCK CLAMP		2	2	2	
32	160033	HOSE RETAINER BLOCK CLAMP		1	1	1	
32	160122	KIT, POWER STEERING PUMP DISCHARGE HOSE (PRESSURE) X		1	1	1	
. NS	160006	. HOSE PRESSURE, POWER STEERING #8 11690MM		1	1	1	
. NS	1600100	. FLANGE, POWER STEERING HOSE		2	2	2	
. NS	500107	. SCREW TC CAP HEXW 1/4-20x2 1/2 Z050		3	3	3	
. NS		. FLARETITE SEAL ARE NO LONGER USED IN PRODUCTION AND SERVICE		1	1	1	
. NS	504189	. CLAMP DOUBLE ASS / SPLIT BLOC / 22MM/19MM x 67MM POLYA		13	13	13	
. NS	504728	. PLATE RETAINER		3	3	3	
. NS	IS-19040	. INSTRUCTION SHEET		1	1	1	
. NS	FI-19040	. VOIR FEUILLE D'INSTRUCTION		1	1	1	
NS	502541	SCREW CAP HEX M6-1.0x65 G8.8 Z050		1	1	1	
NS	500411	WASHER FL .260x.697x.050 SS		2	2	2	
NS	5001182	NUT HEX NYRT M6-1.0 SS		1	1	1	
NS	504634	T-CLIP / 7/8" - 1"		1	1	1	
100	661100	SEAL KIT, REPAIR		1	1	1	A
		A) INCLUDES ITEMS 5, 6, 7, 8, 9, 10					
		1) NOT SOLD SEPARATELY					
		4) NO PARTS NUMBER					

		Date:07/2024	Y2-16
SUSPENSION			

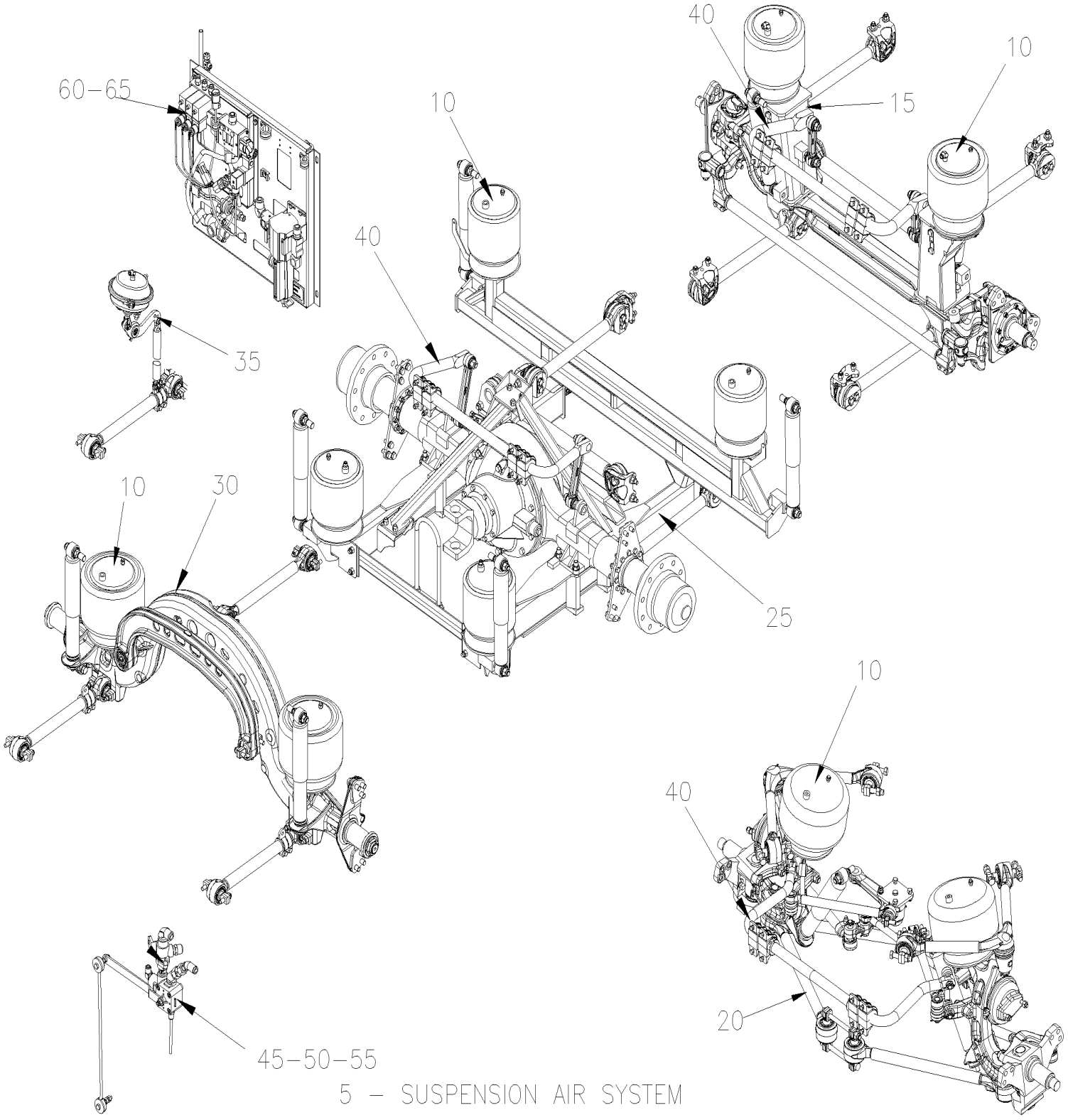

5 – SUSPENSION AIR SYSTEM

		Date:07/2024	Y2-16

SUSPENSION

Item#	Part	Description	XLII 45	XLII MTH40	XLII MTH45	XLII MTH45E	NOTES
5	Y2-1600-00	SUSPENSION AIR SYSTEM From Y-7046 To 7-9095					
5	Y2-1600-50	SUSPENSION AIR SYSTEM - MTH From 7-9096 To 8-9339					
10	Y2-1601-00	BELLOWS - AIR SUSPENSION From Y-7046 To 8-9339					
15	Y2-1605-00	FRONT AXLE - INSTALL W/ I BEAM RIGID From Y-7046 To 6-8906					
20	Y2-1605-50	FRONT AXLE - INSTALL W/INDEPENDENT "IS-84" / 16500LBS From Y-7046 To 3-8164					
20	Y2-1605-51	FRONT AXLE - INSTALL W/INDEPENDENT "NDIFS80P" / 18000LBS From 4-8165 To 8-9339					
25	Y2-1610-00	REAR AXLE - INSTALL SUSPENSION From Y-7046 To 8-9339					
30	Y2-1615-00	TAG AXLE - INSTALL SUSPENSION From Y-7046 To 8-9339					
35	Y2-1615-10	TAG AXLE - LIFTING From Y-7046 To 8-9339					
40	Y2-1616-00	SWAY BAR From Y-7046 To 8-9339					
45	Y2-1620-00	HEIGHT CONTROL VALVE From Y-7046 To 6-8906					
50	Y2-1620-10	HIGH-BUOY, LOW BUOY & "KNEELING" VALVE From Y-7046 To 6-8906					
55	Y2-1620-50	HEIGHT CONTROL VALVE - MTH From Y-7046 To 8-9339					
60	Y2-1630-00	FRONT KNEELING - CONTROL PANEL From Y-7046 To 2-7799					
60	Y2-1630-01	FRONT KNEELING - CONTROL PANEL From 2-7800 To 5-8558					
60	Y2-1630-02	FRONT KNEELING - CONTROL PANEL From 5-8559 To 6-8906					
65	Y2-1640-50	LEVEL-LOW - CONTROL PANEL & VALVES From Y-7046 To 2-7799					
65	Y2-1640-51	LEVEL-LOW - CONTROL PANEL & VALVES From 2-7800 To 5-8558					
65	Y2-1640-52	LEVEL-LOW - CONTROL PANEL & VALVES From 5-8559 To 8-9339					

From Y-7046 To 7-9095		Date:07/2024	PAGE:Y2-1600-00
SUSPENSION AIR SYSTEM			

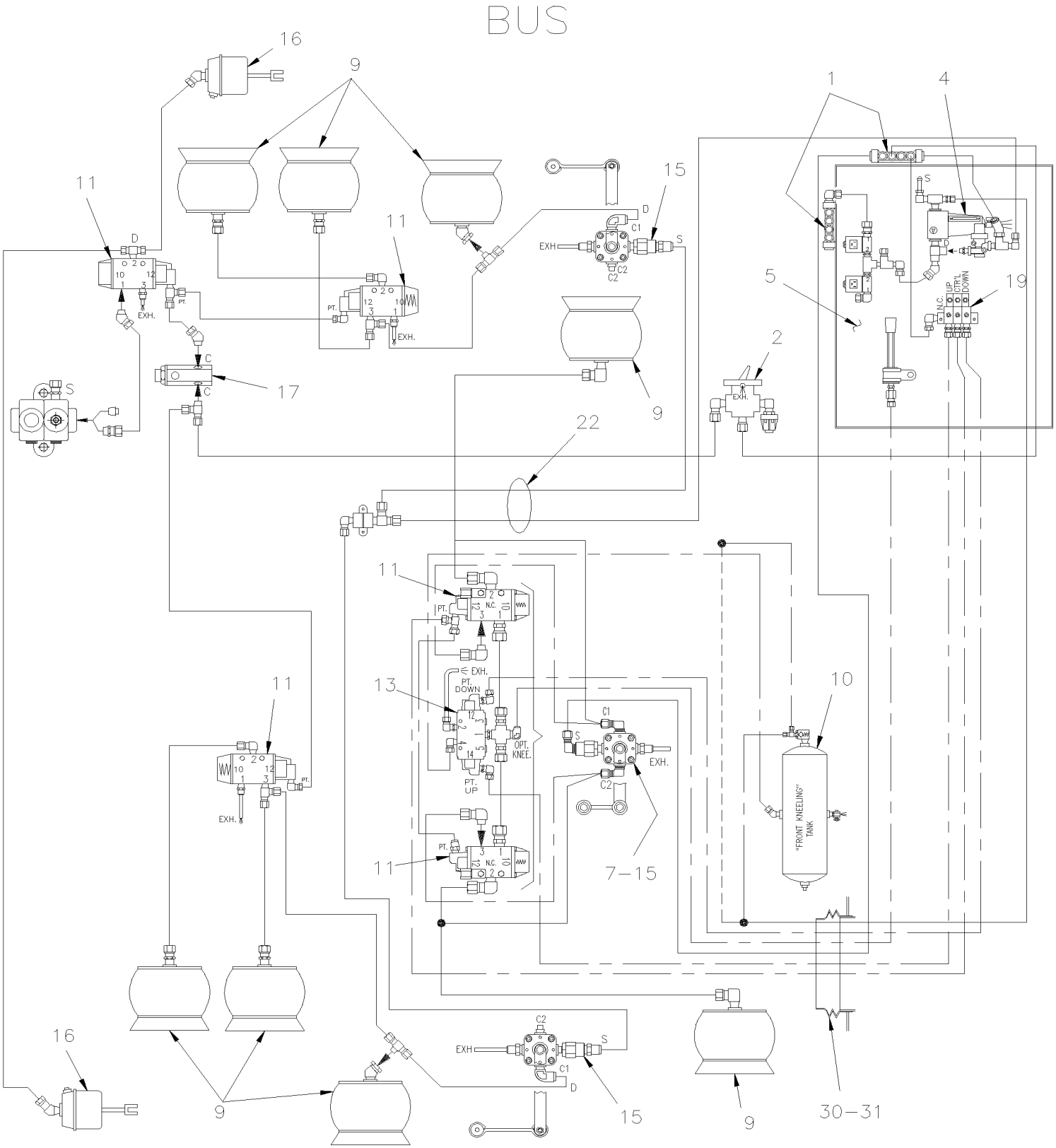

From Y-7046 To 7-9095		Date:07/2024	PAGE:Y2-1600-00
SUSPENSION AIR SYSTEM			

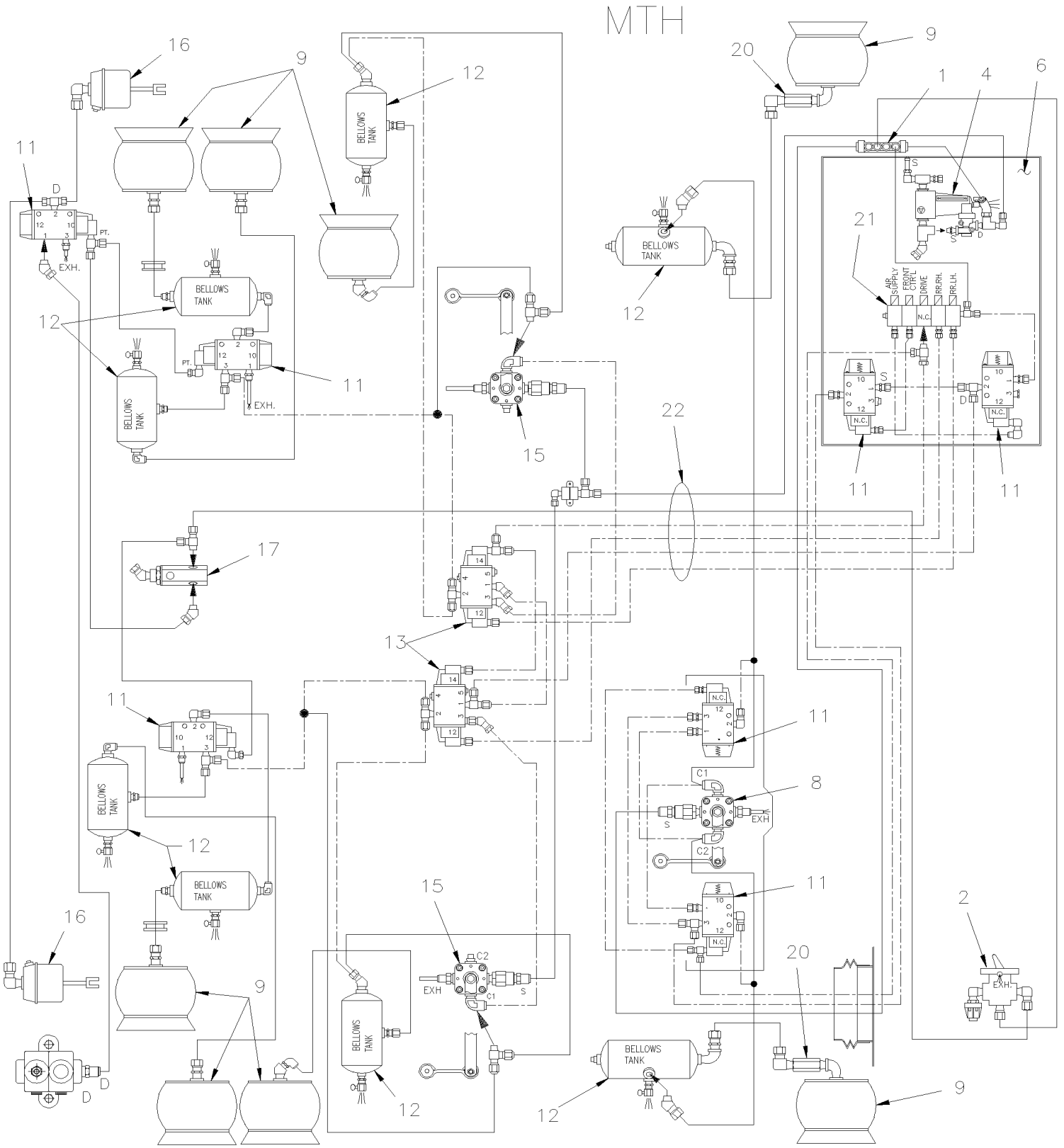

From Y-7046 To 7-9095		Date:07/2024	PAGE:Y2-1600-00

SUSPENSION AIR SYSTEM

Item#	Part	Description	XLII 45	XLII MTH40	XLII MTH45	XLII MTH45E	NOTES
1	641415	MANIFOLD / PUSH-IN FITTING / 2x#6 / 4x#4 PLAS To 6-8906	2				
1	641415	MANIFOLD / PUSH-IN FITTING / 2x#6 / 4x#4 PLAS		1	1	1	
2	640136	VALVE, CONTROL TW-1	1	1	1	1	
. NS	641156	. REPAIR KIT / TW-1	1	1	1	1	
4	**Y2-1220-15**	**AIR FILTER - ACCESSORIES**					
5	**Y2-1630-02**	**FRONT KNEELING - CONTROL PANEL**					
5	**Y2-1630-01**	**FRONT KNEELING - CONTROL PANEL**					
5	**Y2-1630-02**	**FRONT KNEELING - CONTROL PANEL**					
6	**Y2-1640-50**	**LEVEL-LOW - CONTROL PANEL & VALVES**					
6	**Y2-1640-51**	**LEVEL-LOW - CONTROL PANEL & VALVES**					
6	**Y2-1640-52**	**LEVEL-LOW - CONTROL PANEL & VALVES**					
7	**Y2-1620-00**	**HEIGHT CONTROL VALVE**					
8	**Y2-1620-50**	**HEIGHT CONTROL VALVE - MTH**					
9	**Y2-1601-00**	**BELLOWS - AIR SUSPENSION**					
10	641411	AIR TANK / 2370 IN° / 12" O.D. X 24" To 6-8906	1				
11	641274	VALVE, 3 WAYS, 2 POSITIONS N.C.	1	1	1	1	
12	**Y2-1203-01**	**AIR TANK - INSTALLATION**					
13	641531	VALVE, 5 WAYS, 3 POSITIONS	2	2	2	2	
. NS	641186	. SPOOL	1	1	1	1	
15	630156	VALVE, HEIGHT CONTROL "BARKSDALE" To 6-8906	3				
15	630156	VALVE, HEIGHT CONTROL "BARKSDALE"		2	2	2	
16	**Y2-1615-10**	**TAG AXLE - LIFTING**					
17	640442	VALVE, INVERSION TR-2	1	1	1	1	
19	641180	MANIFOLD VALVE / W/3 SOLENOID To 6-8906	1				
. NS	641928	. KIT, MANIFOLD REPAIR / N.C. To 6-8906	3				
. NS	641107	. COIL 24V To 6-8906	1				
20	131737	MALE CONNECTOR 123.8MM 1/2 NPT		2	2	2	
21	641205	MANIFOLD VALVE / W/5 SOLENOID		1	1	1	
. NS	641928	. KIT, MANIFOLD REPAIR / N.C.		5	5	5	
. NS	641107	. COIL 24V		5	5	5	
22	**Y2-1202-00**	**TUBES PLASTIC / AIR D.O.T.**					
30	504499	CUFF END BELLOW / 2 7/8" I.D. x 3 5/8" x 4 7/16	1	1	1	1	
31	141567	PROTECTOR RUBBER 100MM	1	1	1	1	
31	509558	WEATHERSEAL SNAP-ON 1/8" / SINGLE LIP / WH / C.T.L.	AR	AR	AR	AR	

From 7-9096 To 8-9339		Date:07/2024	PAGE:Y2-1600-50
SUSPENSION AIR SYSTEM - MTH			

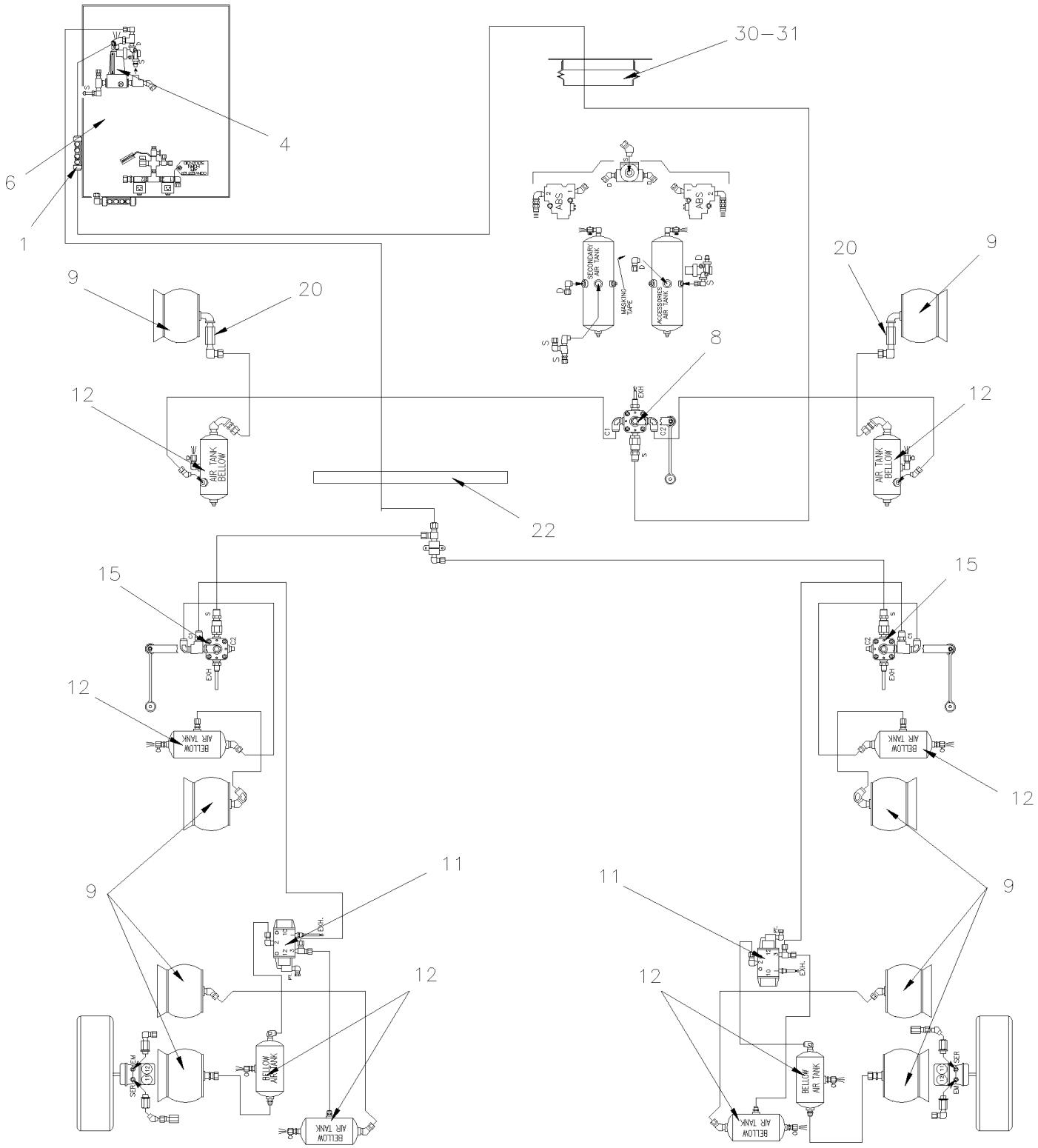

MTH-40' & MTH-45 ENT STANDARD SUSPENSION

From 7-9096 To 8-9339		Date:07/2024	PAGE:Y2-1600-50
SUSPENSION AIR SYSTEM - MTH			

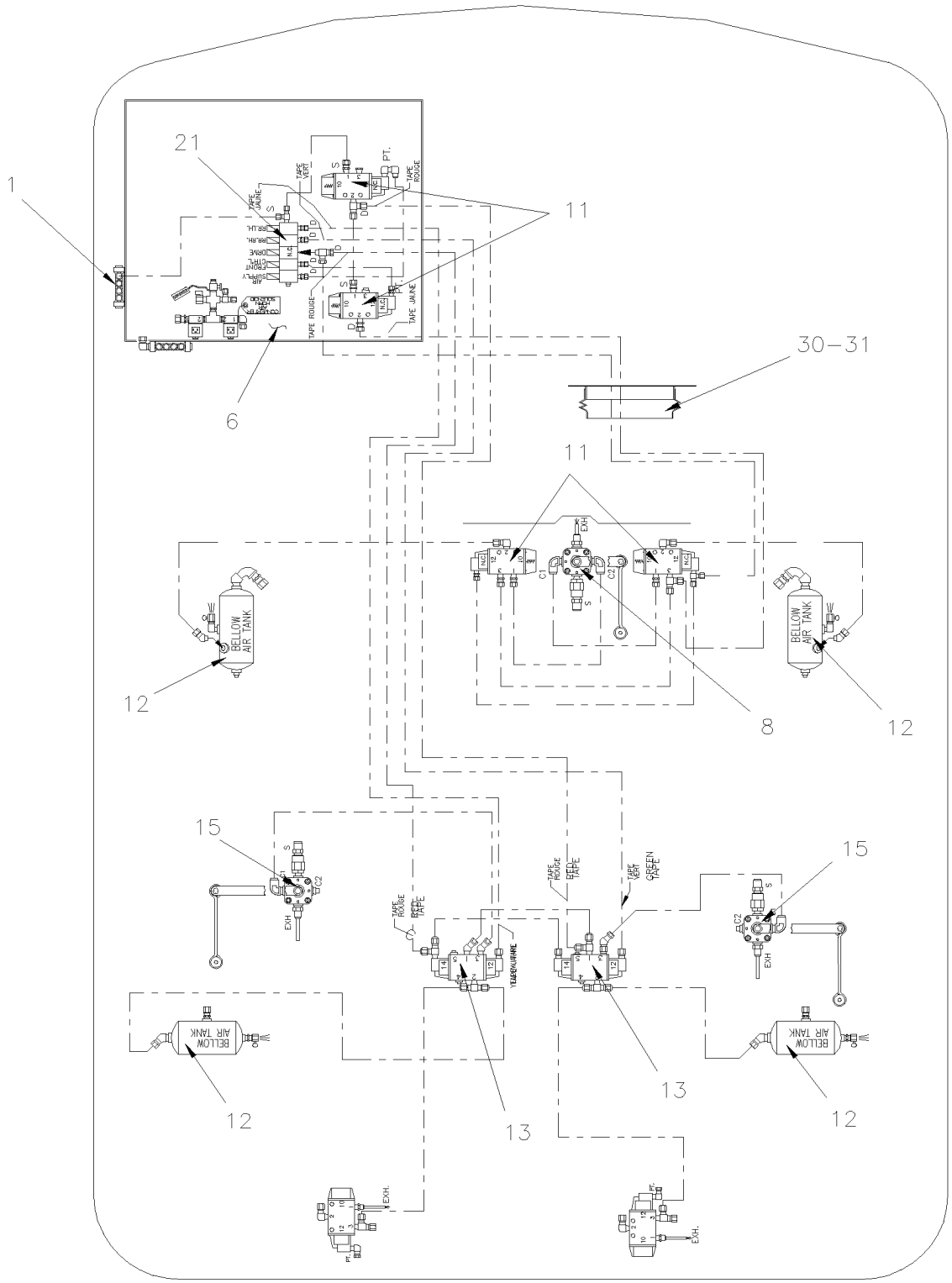

MTH–40' & MTH–45' ENT
WITH OPTION LEVEL LOW

From 7-9096 To 8-9339		Date:07/2024	PAGE:Y2-1600-50

SUSPENSION AIR SYSTEM - MTH

Item#	Part	Description	XLII 45	XLII MTH40	XLII MTH45	XLII MTH45E	NOTES
1	641415	MANIFOLD / PUSH-IN FITTING / 2x#6 / 4x#4 PLAS		1	1	1	
4	**Y2-1220-15**	**AIR FILTER - ACCESSORIES**					
6	**Y2-1640-52**	**LEVEL-LOW - CONTROL PANEL & VALVES**					
8	630237	VALVE, HEIGHT CONTROL "BARKSDALE" / FRONT		1	1	1	
9	**Y2-1601-00**	**BELLOWS - AIR SUSPENSION**					
11	641274	VALVE, 3 WAYS, 2 POSITIONS N.C.		AR	AR	AR	
12	**Y2-1203-01**	**AIR TANK - INSTALLATION**					
13	641531	VALVE, 5 WAYS, 3 POSITIONS		2	2	2	
. NS	641186	. SPOOL		1	1	1	
15	630156	VALVE, HEIGHT CONTROL "BARKSDALE"		2	2	2	
20	131737	MALE CONNECTOR 123.8MM 1/2 NPT		2	2	2	
21	641205	MANIFOLD VALVE / W/5 SOLENOID		1	1	1	
. NS	641928	. KIT, MANIFOLD REPAIR / N.C.		5	5	5	
. NS	641107	. COIL 24V		5	5	5	
22	**Y2-1202-00**	**TUBES PLASTIC / AIR D.O.T.**					
30	504499	CUFF END BELLOW / 2 7/8" I.D. x 3 5/8" x 4 7/16		1	1	1	
31	141567	PROTECTOR RUBBER 100MM		1	1	1	

From Y-7046 To 8-9339		Date:07/2024	PAGE:Y2-1601-00
BELLOWS - AIR SUSPENSION			

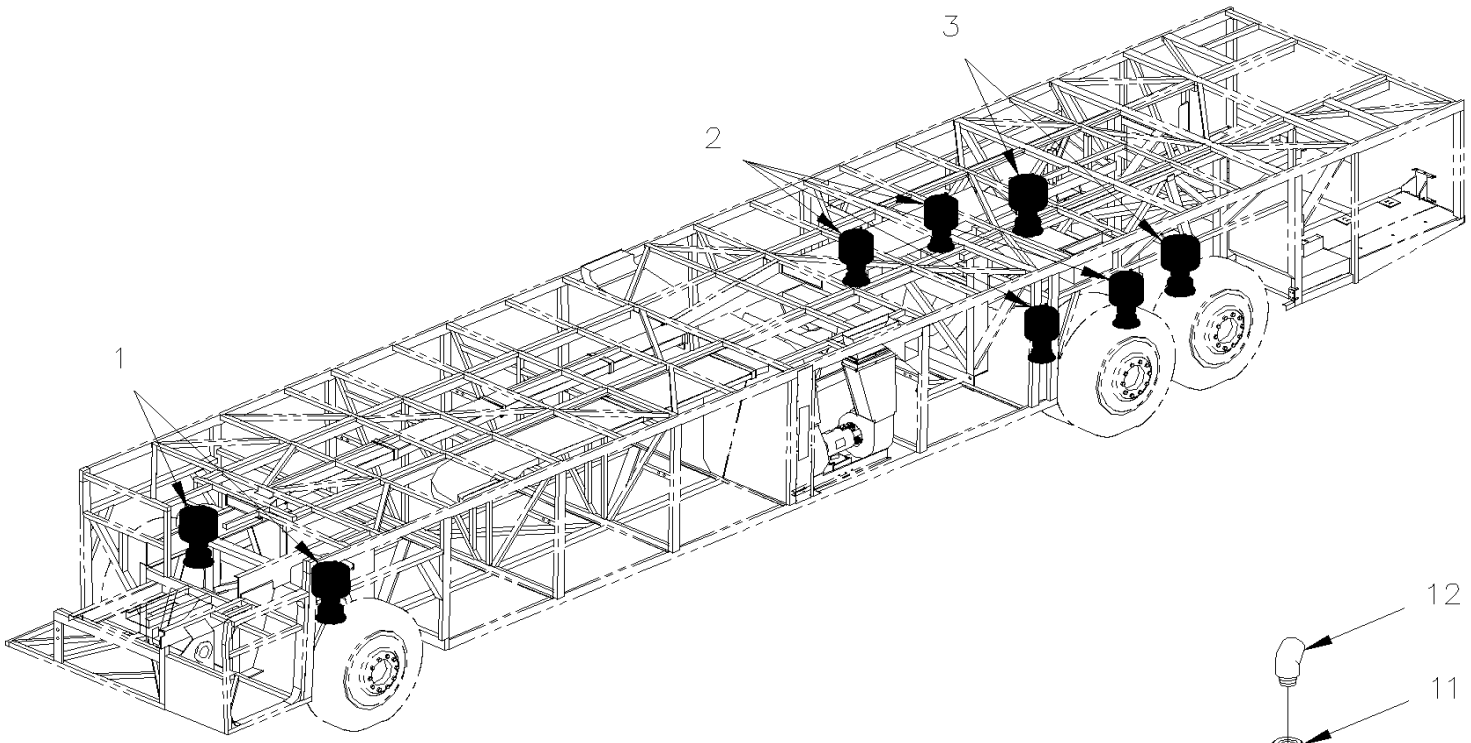

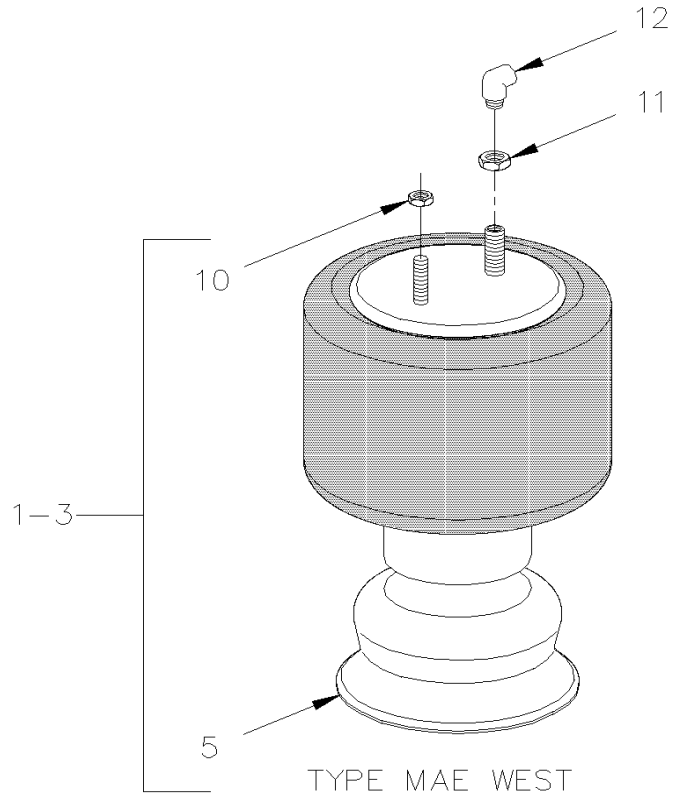

TYPE MAE WEST

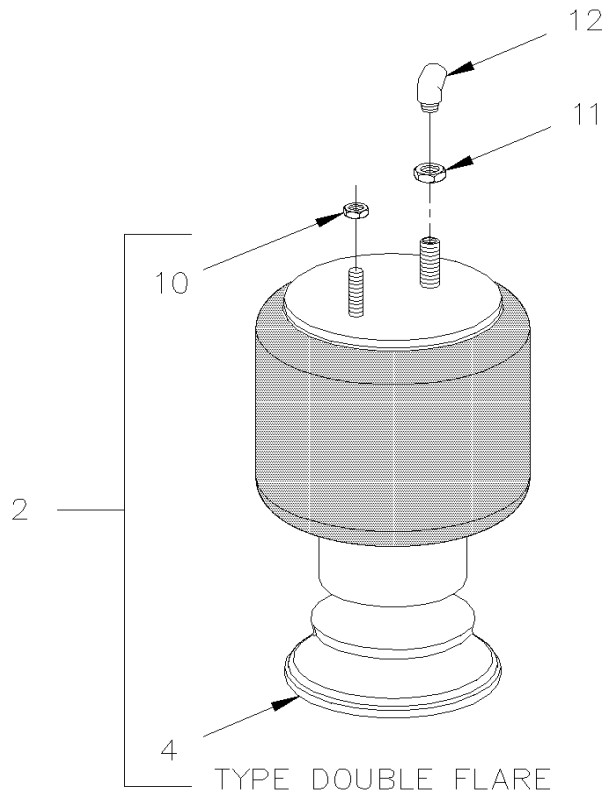

TYPE DOUBLE FLARE

From Y-7046 To 8-9339		Date:07/2024	PAGE:Y2-1601-00

BELLOWS - AIR SUSPENSION

Item#	Part	Description	XLII 45	XLII MTH40	XLII MTH45	XLII MTH45E	NOTES
		. . . . FRONT AXLE BELLOW					
1	630151	BELLOW ASSY / MODEL 1200 M.W. To 6-8906	2				
1	630151	BELLOW ASSY / MODEL 1200 M.W. To 3-8164		2	2	2	
1	630223	. BELLOW ASSY W/O PISTON To 3-8164	1	1	1	1	
1	630239	BELLOW ASSY / MODEL 1400 M.W. From 4-8165		2	2	2	A
		. . . . DRIVE AXLE BELLOW					
2	630105	BELLOW ASSY / MODEL 1100 D.F. To 5-8697	4	4	4	4	
2	630109	. BELLOW ASSY W/O PISTON To 5-8697	1	1	1	1	
2	630260	BELLOW ASSY / MODEL 1100 D.F. From 5-8698	1	1	1	1	
		. . . . TAG AXLE BELLOW					
3	630126	BELLOW ASSY / MODEL 1100 M.W. To 5-8735	2	2		2	
3	630128	. BELLOW ASSY W/O PISTON To 5-8735	1	1		1	
3	630259	BELLOW ASSY / MODEL 1100 M.W. From 5-8736	2	2		2	
3	630126	BELLOW ASSY / MODEL 1100 M.W. To 2-7855			2		
3	630128	. BELLOW ASSY W/O PISTON To 2-7855			1		
3	630151	BELLOW ASSY / MODEL 1200 M.W. From 2-7856 To 7-9290			2		
3	630223	. BELLOW ASSY W/O PISTON From 2-7856 To 7-9290			1		
3	630162	BELLOW ASSY / MODEL 1200 M.W. From 7-9291			2		
4	630071	. PISTON / TYPE DOUBLE FLARE	AR	AR	AR	AR	
5	630036	. PISTON / TYPE MAY WEST	AR	AR	AR	AR	
10	500717	NUT HEX NYRT 1/2-20 Z050	AR	AR	AR	AR	
10	5001599	NUT HEX NYRT THN 1/2-13 Z050	AR	AR	AR	AR	
10	500968	NUT HEX STO 1/2-13 Z050	AR	AR	AR	AR	
10	502595	NUT HEX NYRT 1/2-13 Z050	AR	AR	AR	AR	
11	502831	NUT HEX THN 1 1/4-12x1/2	AR	AR	AR	AR	
11	5001041	NUT HEX THN 1 1/4-12x1/2 To 6-8906	AR				
12	501406	STREET ELBOW 90º / PIPE FITTING / 1/2NPT-Mx1/2NPT-F BR To 6-8906	1				
12	5011170	STREET ELBOW 90º / PIPE FITTING / 1/2NPT-Mx1/2NPT-F GAL	2	2	2	2	
12	641410	MALE ELBOW 90° NON-SWIVEL / PUSH-IN FITTING / #12x1/2NPT-M BR	2	2	2	2	
12	641384	MALE CONNECTOR / PUSH-IN FITTING / #10x1/2NPT-M BR				AR	
NS	131388	MALE CONNECTOR 114MM 1/2 NPT To 3-8164	1	1	1	1	A
NS	131737	MALE CONNECTOR 123.8MM 1/2 NPT From 4-8165	1	1	1	1	A

From Y-7046 To 8-9339		Date:07/2024	PAGE:Y2-1601-00

BELLOWS - AIR SUSPENSION

Item#	Part	Description	XLII 45	XLII MTH40	XLII MTH45	XLII MTH45E	NOTES
		A) WITH INDEPENDANT SUSPENSION					

From Y-7046 To 6-8906		Date:07/2024	PAGE:Y2-1605-00
FRONT AXLE - INSTALL W/ I BEAM RIGID			

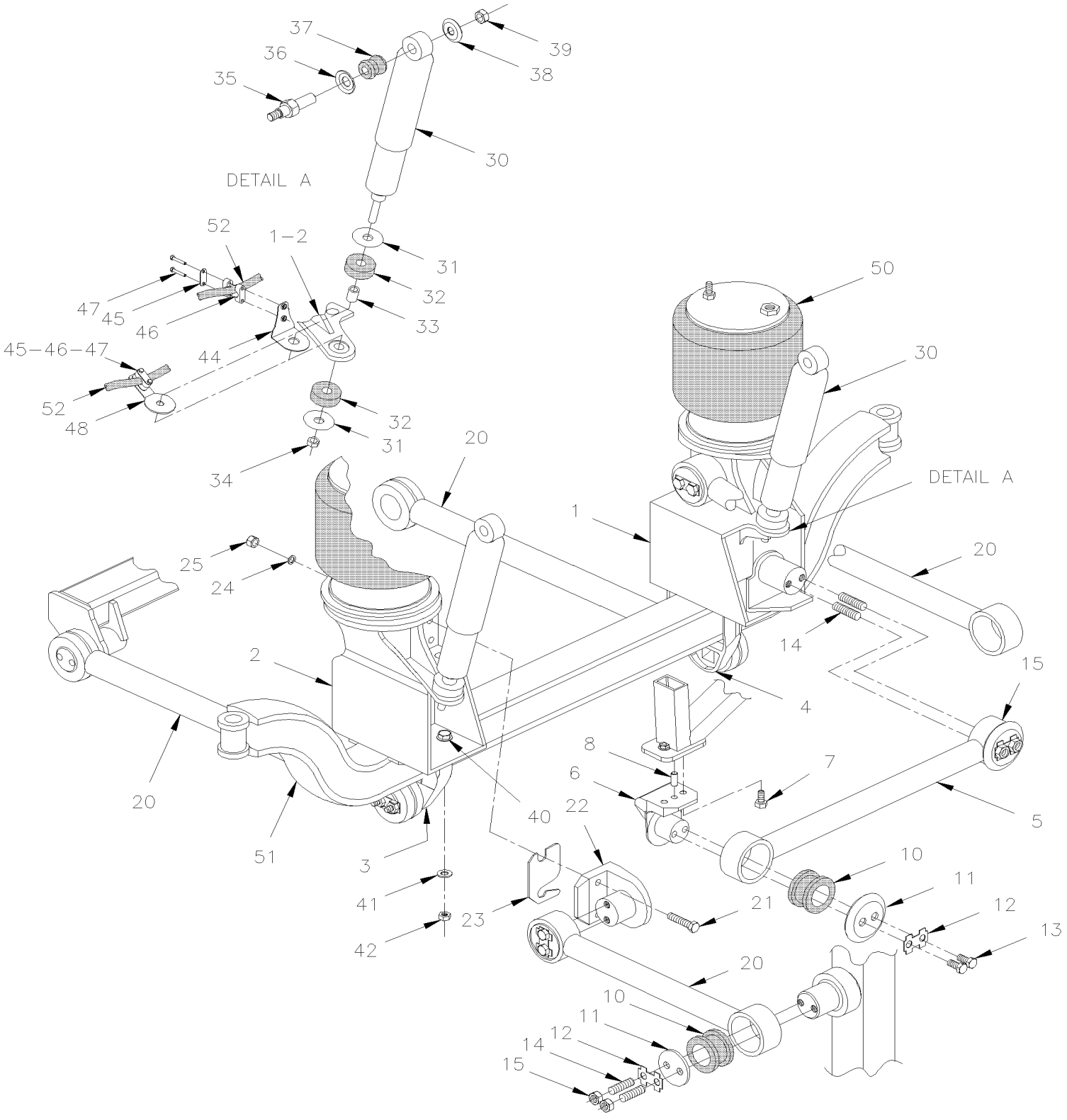

From Y-7046 To 6-8906		Date:07/2024	PAGE:Y2-1605-00

FRONT AXLE - INSTALL W/ I BEAM RIGID

Item#	Part	Description	XLII 45	XLII MTH40	XLII MTH45	XLII MTH45E	NOTES
1	110713	SUPPORT ASSY L.H. BELLOW	1				
2	110712	SUPPORT ASSY R.H. BELLOW	1				
NS	110762	SPACER WASHER 1" I.D. X 1 1/2" O.D. X 16GA To 2-7929	1				A
3	110740	SUPPORT RADIUS ROD R.H.	1				
4	110739	SUPPORT RADIUS ROD L.H.	1				
5	110648	ROD ASSY / 34 13/16" C/C (885MM)	1				
6	131544	SUPPORT / ROD / W/2 M16-2 HOLES & DOWEL PIN / 95MM C/C // 150MM SHORT To 5-8461	1				
6	131686	SUPPORT / ROD / W/2 M16-2 HOLES & DOWEL PIN / 95MM C/C // 150MM SHORT From 5-8462 To 6-8950	1				
6	132912	SUPPORT RADIUS ROD / 95MM C/C // 150MM SHORT & 2xM16-2 HOLES SERVICE From 6-8951	1				
6	121890	TORQUE PLATE / W/2HOLES 17MM I.D. X 90MM C/C	1				
7	5001224	SCREW CAP HEX M16-2.0x60 G10.9 G500	2				
7	5001372	SCREW CAP HEX M16-2.0x50 G10.9 N500 SERVICE	2				
8	502164	PIN DOWEL M16 X 40MM	1				
10	630021	RUBBER BUSHING "PREVOST"	10				
NS	192380	SHIM WASHER / BUSHING RADIUS ROD 2.795x4.330x.0625 SS	AR				W
11	110681	RETAINER PLATE / IRON 110MM OD W/16.7 @ 38C/C	10				
12	110340	TAB LOCK / W/2 HOLES / W/4 TABS / 18MM I.D. X 38MM C/C	10				
13	502544	SCREW CAP HEX M16-2.0x40 G8.8 Z050 To 6-8844	2				
13	500813	SCREW CAP HEX M16-2.0x35 G8.8 ZP From 6-8845	2				
14	130963	STUD M16-2.0x70	2				
15	502588	NUT HEX M16-2.0 ZP	2				
20	131560	ROD ASSY / 24 1/16" C/C (611MM)	3				
21	5001512	SCREW CAP HEX M16-2.0x100 G10.9 G500 To 6-8950	2				
21	5001501	SCREW CAP HEX M16-2.0x90 G10.9 Z050 SERVICE From 6-8951	2				
22	131065	SUPPORT / ROD / W/2 M16-2 HOLES / 95MM C/C // 150MM SHORT To 5-8461	1				
22	131753	SUPPORT / ROD / W/2 M16-2 HOLES / 95MM C/C // 150MM SHORT From 5-8462 To 6-8950	1				
22	132914	SUPPORT / ROD / W/2 M16-2 HOLES / 95MM C/C // 150MM SHORT SERVICE From 6-8951	1				
. NS	121890	. TORQUE PLATE / W/2HOLES 17MM I.D. X 90MM C/C From 6-8951	AR				
23	110732	SHIM 0.125	AR				
24	5001046	WASHER FL .656x1.500x.187	2				
25	5001662	NUT HEX NYRT M16-2.0 G10 Z050	2				
30	630228	SHOCK ABSORBER / WHITE To 3-8164	2				
30	630254	SHOCK ABSORBER / SACHS / 206 From 4-8165	2				
. NS	630255	. KIT WASHER & RUBBER BUSHING From 4-8165	1				
. NS	630257	. BUSHING / RUBBER / (TWO PIECES) 1" x 1.005" I.D. From 4-8165	1				
30	630013	SHOCK ABSORBER	1				
. NS	630291	. BUSHING / RUBBER / (TWO PIECES) 1" x 1.005" I.D.	1				
. NS	630255	. KIT WASHER & RUBBER BUSHING	1				
31	630155	. BUSHING KIT / LOWER SHOCK To 2-7816	1				
31	630249	. KIT WASHER & RUBBER BUSHING From 2-7817 To 3-8164	AR				
31	630255	. KIT WASHER & RUBBER BUSHING From 4-8165	AR				
31	630153	. . WASHER STEEL To 2-7816	2				

From Y-7046 To 6-8906		Date:07/2024	PAGE:Y2-1605-00

FRONT AXLE - INSTALL W/ I BEAM RIGID

Item#	Part	Description	XLII 45	XLII MTH40	XLII MTH45	XLII MTH45E	NOTES
31	110756	. . WASHER CONCAVE 75MM O,D. X 16.5MM I.D From 2-7817 To 3-8164	2				
32	630152	. . BUSHING / RUBBER To 3-8164	2				
33	630154	. . SPACER SLEEVE / STEEL To 3-8164	2				
34	500725	. . NUT HEX STO 5/8-18 Z050 To 3-8164	2				
34	963121	. . NUT HEX NYRT M16-1.5 ZP From 4-8165	2				
35	131424	PIN W/TAPER ATTACHMENT M20-2.5	2				
36	5001153	WASHER CON 25.5x50.0x4.5 ZP	2				
37	630257	BUSHING / RUBBER / (TWO PIECES) 1" x 1.005" I.D.	2				
38	5001152	WASHER CON 21.0x50.0x4.5 ZP	2				
39	500809	NUT HEX STO M20-2.5 N500	2				
40	5001510	SCREW CAP HEX M22-2.5x85 G8.8 ZP	9				
41	5001509	WASHER FL 23.0x39.0x4.0 ZP	9				
42	5001176	NUT HEX STO M22-2.5 ZP	9				
44	110738	HOSE SUPPORT L.H. & R.H. / FIXED AT SHOCK END /	2				
45	504614	PLATE RETAINING / COLLAR	2				
46	504612	COLLAR 13/16" I.D. / TO FIX HOSE	4				
47	502656	SCREW CAP HEX M6-1.0x50 SS	4				
48	110765	HOSE SUPPORT L.H. & R.H. / FIXED AT SHOCK END /	2				
50	**Y2-1601-00**	**BELLOWS - AIR SUSPENSION**					
51	**Y2-1005-00**	**FRONT AXLE - I BEAM RIGID MODEL "S-84"**					
52	**Y2-1225-10**	**BRAKE CHAMBER - FRONT AXLE TYPE 22**					
52	**Y2-1225-11**	**BRAKE CHAMBER - FRONT AXLE TYPE 24**					
52	**Y2-1225-12**	**BRAKE CHAMBER - FRONT AXLE TYPE 27**					
		A) BETWEEN LINK AND SUPPORT					
		W) IF NEED, USE BETWEEN BUSHING ROD SUPPORT					

From Y-7046 To 3-8164		Date:07/2024	PAGE:Y2-1605-50

FRONT AXLE - INSTALL W/INDEPENDENT "IS-84" / 16500LBS

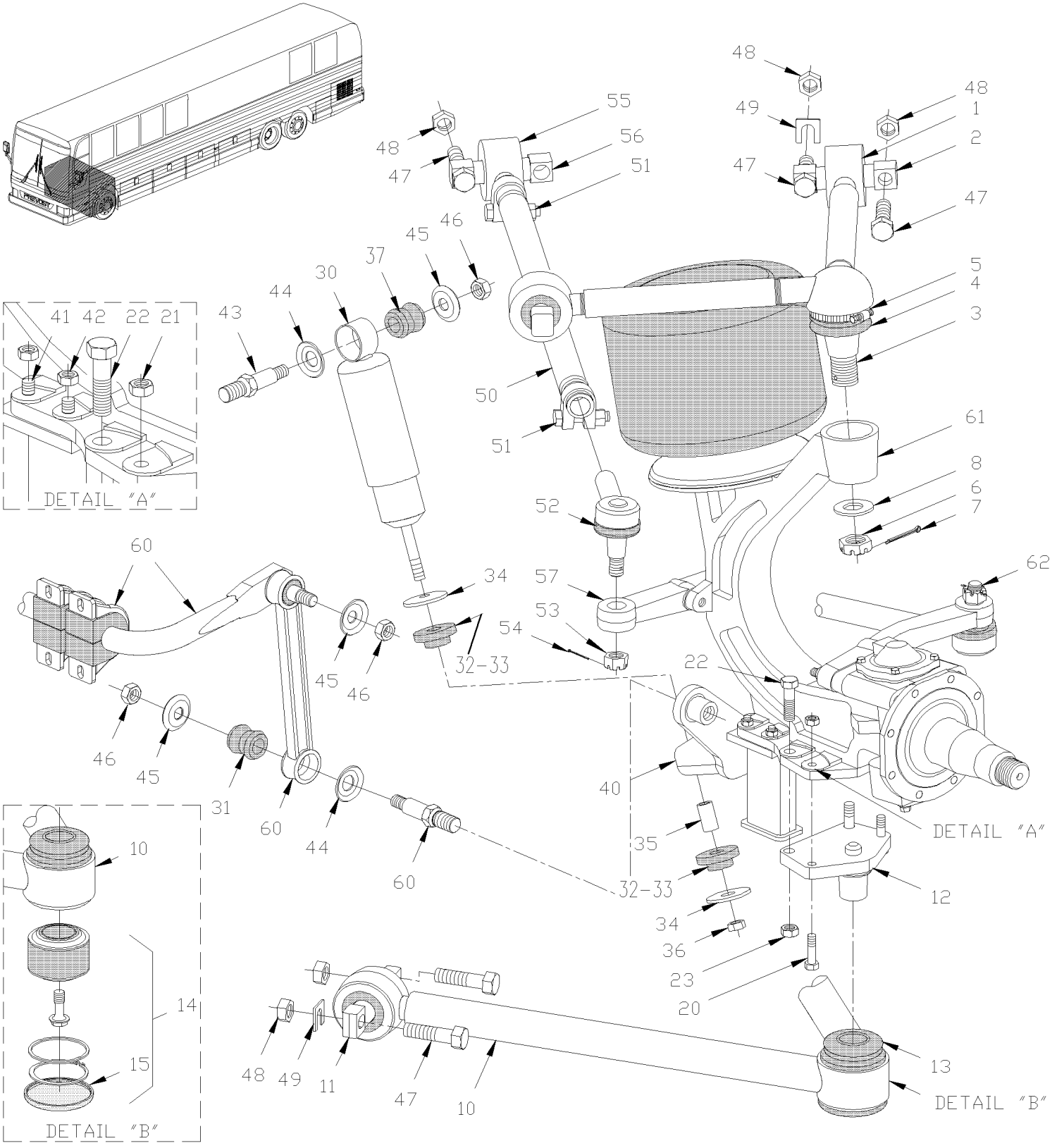

From Y-7046 To 3-8164		Date:07/2024	PAGE:Y2-1605-50

FRONT AXLE - INSTALL W/INDEPENDENT "IS-84" / 16500LBS

Item#	Part	Description	XLII 45	XLII MTH40	XLII MTH45	XLII MTH45E	NOTES
1	611203	UPPER ARM ASSY / L.H. & R.H.	2	2	2	2	
1	611347	UPPER ARM ASSY / L.H. & R.H. / SERVICE	1	1	1	1	
2	611135	. BUSHING BAR PIN / 20MM 130mm c/c 75MM O.D. x 52MM wide	1	1	1	1	
. NS	683108	. . TOOL MOUNTING / MATRICE	1	1	1	1	
. NS	683109	. . TOOL MOUNTING / TAPER RING / 100.5MM O.D.	1	1	1	1	
. NS	683110	. . TOOL MOUNTING / STABILISATION	1	1	1	1	
2	N.S.S.	. . LOCK RING	1	1	1	1	1
2	N.S.S.	. . SPACER RING	1	1	1	1	1
3	611108	. BALL STUD / REPAIR KIT / W/611203 ONLY	1	1	1	1	C
3	N.S.S.	. . BEARING RACE	1	1	1	1	1
3	N.S.S.	. . BEARING RETAINER	1	1	1	1	1
4	611109	. SEALING BOOT KIT / W/611203 ONLY	1	1	1	1	
5	611110	. . RING / RETAINER BOOT 96MM	1	1	1	1	
6	5001321	. NUT HEX CSL M30-1.5 17TH CJ	1	1	1	1	
7	502105	. PIN, COTTER 3/16 x 2	1	1	1	1	
8	5001255	WASHER FL 31.75x54.77x3.175	2	2	2	2	
10	611072	LOWER ARM ASSY / R.H.	1	1	1	1	
NS	611078	LOWER ARM ASSY / L.H.	1	1	1	1	
11	611114	. BUSHING BAR PIN / 20x25MM 130mm c/c 85MM O.D. x 55MM wide	1	1	1	1	
. NS	683111	. . TOOL MOUNTING / MATRICE	1	1	1	1	
. NS	683112	. . TOOL MOUNTING / TAPER RING / 106.5MM O.D.	1	1	1	1	
. NS	683113	. . TOOL MOUNTING / STABILISATION	1	1	1	1	
11	N.S.S.	. . LOCK RING	1	1	1	1	1
11	N.S.S.	. . SPACER RING	1	1	1	1	1
12	611117	. MOUNTING BRACKET / TOP OF LOWER ARM W/4 HOL	1	1	1	1	
12	611357	. MOUNTING BRACKET / TOP OF LOWER ARM W/4 HOL	1	1	1	1	S
13	611115	. SEALING BOOT ASSY / ARM MOUNTING BRACKET	1	1	1	1	
NS	611116	. . RING / RETAINER BOOT 113MM	1	1	1	1	
14	611112	. LOWER BEARING BALL ASSY / REPAIR KIT	1	1	1	1	
. NS	683114	. . TOOL MOUNTING / MATRICE	1	1	1	1	
. NS	683115	. . TOOL MOUNTING / TAPER RING / 101.5MM O.D.	1	1	1	1	
. NS	683116	. . TOOL MOUNTING / STABILISATION	1	1	1	1	
. NS	683117	. . TOOL MOUNTING / MATRICE	1	1	1	1	
. NS	683118	. . TOOL MOUNTING / HANDLE	1	1	1	1	
. NS	683119	. . TOOL MOUNTING / MATRICE	1	1	1	1	
. NS	683120	. . TOOL MOUNTING RING POSITIONING	1	1	1	1	
14	N.S.S.	. . . BEARING ELEMENT RING	2	2	2	2	1
14	N.S.S.	. . . BEARING SPACER RING	2	2	2	2	1
14	N.S.S.	. . . SCR CAP HEX M14-1.5 X 30MM SPECIAL	1	1	1	1	1
15	611113	. . . CLOSING CAP, LOWER	1	1	1	1	
20	5001322	SCREW CAP HEX M16-1.5x60 G10.9 ZP	2	2	2	2	
NS	5001224	SCREW CAP HEX M16-2.0x60 G10.9 G500	AR	AR	AR	AR	

From Y-7046 To 3-8164		Date:07/2024	PAGE:Y2-1605-50

FRONT AXLE - INSTALL W/INDEPENDENT "IS-84" / 16500LBS

Item#	Part	Description	XLII 45	XLII MTH40	XLII MTH45	XLII MTH45E	NOTES
21	5001253	NUT HEX STO M16-1.5 G500	4	4	4	4	
NS	5001254	NUT HEX STO M16-2.0 DP	AR	AR	AR	AR	A
30	630136	SHOCK ABSORBER / BLACK	2	2	2	2	
30	630235	SHOCK ABSORBER / "KONI" (ORANGE)	AR	AR	AR	AR	O
31	630062	. BUSHING / RUBBER / (ONE PIECE) 2" x 1.005" I.D. To 2-7816	2	2	2	2	
32	630249	. KIT WASHER & RUBBER BUSHING From 2-7817	2	2	2	2	
33	630152	. . BUSHING / RUBBER	2	2	2	2	
34	630153	. . WASHER STEEL To 2-7816	2	2	2	2	
34	110756	. . WASHER CONCAVE 75MM O,D. X 16.5MM I.D From 2-7817	2	2	2	2	
35	630154	. . SPACER SLEEVE / STEEL	1	1	1	1	
36	500725	. . NUT HEX STO 5/8-18 Z050	1	1	1	1	
37	630257	. BUSHING / RUBBER / (TWO PIECES) 1" x 1.005" I.D.	2	2	2	2	
40	110674	SUPPORT R.H. / LOWER SHOCK & SWAY BAR	1	1	1	1	
NS	110675	SUPPORT L.H. / LOWER SHOCK & SWAY BAR	1	1	1	1	
41	5001043	SCREW CAP HEX M12-1.75x50 G8.8 Z050	8	8	8	8	
42	500811	NUT HEX STO M12-1.75 G500	8	8	8	8	B
43	131424	PIN W/TAPER ATTACHMENT M20-2.5	2	2	2	2	
44	5001153	WASHER CON 25.5x50.0x4.5 ZP	2	2	2	2	
45	5001152	WASHER CON 21.0x50.0x4.5 ZP	6	6	6	6	
46	500809	NUT HEX STO M20-2.5 N500	1	1	1	1	
47	5001225	SCREW CAP HEX M20-2.5x80 G10.9 G500	16	16	16	16	
48	5001252	NUT HEX STO M20-2.5 DP	16	16	16	16	
49	160992	SHIM "U" 6.35 x 39.5MM x 38MM x 20 i.d.	8	8	8	8	
NS	160993	SHIM "U" 3.175x 39.5MM x 38MM x 20 i.d.	4	4	4	4	
50	161001	ROD ASSY / 5TH	2	2	2	2	
51	611129	. COLLAR ASSY / W/BOLT & NUT 37MM I.D.	2	2	2	2	
. NS	N17588	. . SCREW CAP HEX M12-1.75x70 G10.9 DP	1	1	1	1	
. NS	500811	. . NUT HEX STO M12-1.75 G500	1	1	1	1	
52	611128	. TIE ROD END R.H. THREAD M30-1.5	1	1	1	1	
. NS	N20571	. . RUBBER SEAL BOOT	1	1	1	1	
. NS	N8884429	. . NUT HEX CSL M24-1.5 15TH CJ	1	1	1	1	
53	5001325	. . NUT HEX CSL M24-1.5 15TH CJ	1	1	1	1	
54	502104	. . PIN, COTTER 5/32 x 2	1	1	1	1	
55	611130	. BALL PIN BUSHING ASSY	1	1	1	1	
56	611127	. . BUSHING BAR PIN / 15MM 90mm c/c 55MM O.D. x 50MM wide	1	1	1	1	
57	661071	UPRIGHT ARM L.H. / W/56 Deg	1	1	1	1	
NS	661072	UPRIGHT ARM R.H. / W/56 Deg	1	1	1	1	
60	**Y2-1616-00**	**SWAY BAR**					
61	**Y2-1005-50**	**FRONT AXLE - INDEPENDENT MODEL "IS-84" / 16500LBS**					
62	**Y2-1410-50**	**STEERING RODS - INSTALLATION W/INDEPENDENT "IS-84" / 16500LBS**					
70	630151	BELLOW ASSY / MODEL 1200 M.W.	2	2	2	2	
71	501406	STREET ELBOW 90º / PIPE FITTING / 1/2NPT-Mx1/2NPT-F BR	1	1	1	1	

From Y-7046 To 3-8164		Date:07/2024	PAGE:Y2-1605-50

FRONT AXLE - INSTALL W/INDEPENDENT "IS-84" / 16500LBS

Item#	Part	Description	XLII 45	XLII MTH40	XLII MTH45	XLII MTH45E	NOTES
73	131388	MALE CONNECTOR 114MM 1/2 NPT	1	1	1	1	
74	5001041	NUT HEX THN 1 1/4-12x1/2	1	1	1	1	
		A) TO FIX ARM					
		B) TO FIX SUPPORT					
		C) USE TOOL #683121					
		O) "OPTION" SPECIAL					
		S) AFTER MARKET					
		1) NOT SOLD SEPARATELY					

From 4-8165 To 8-9339		Date:07/2024	PAGE:Y2-1605-51
FRONT AXLE - INSTALL W/INDEPENDENT "NDIFS80P" / 18000LBS			

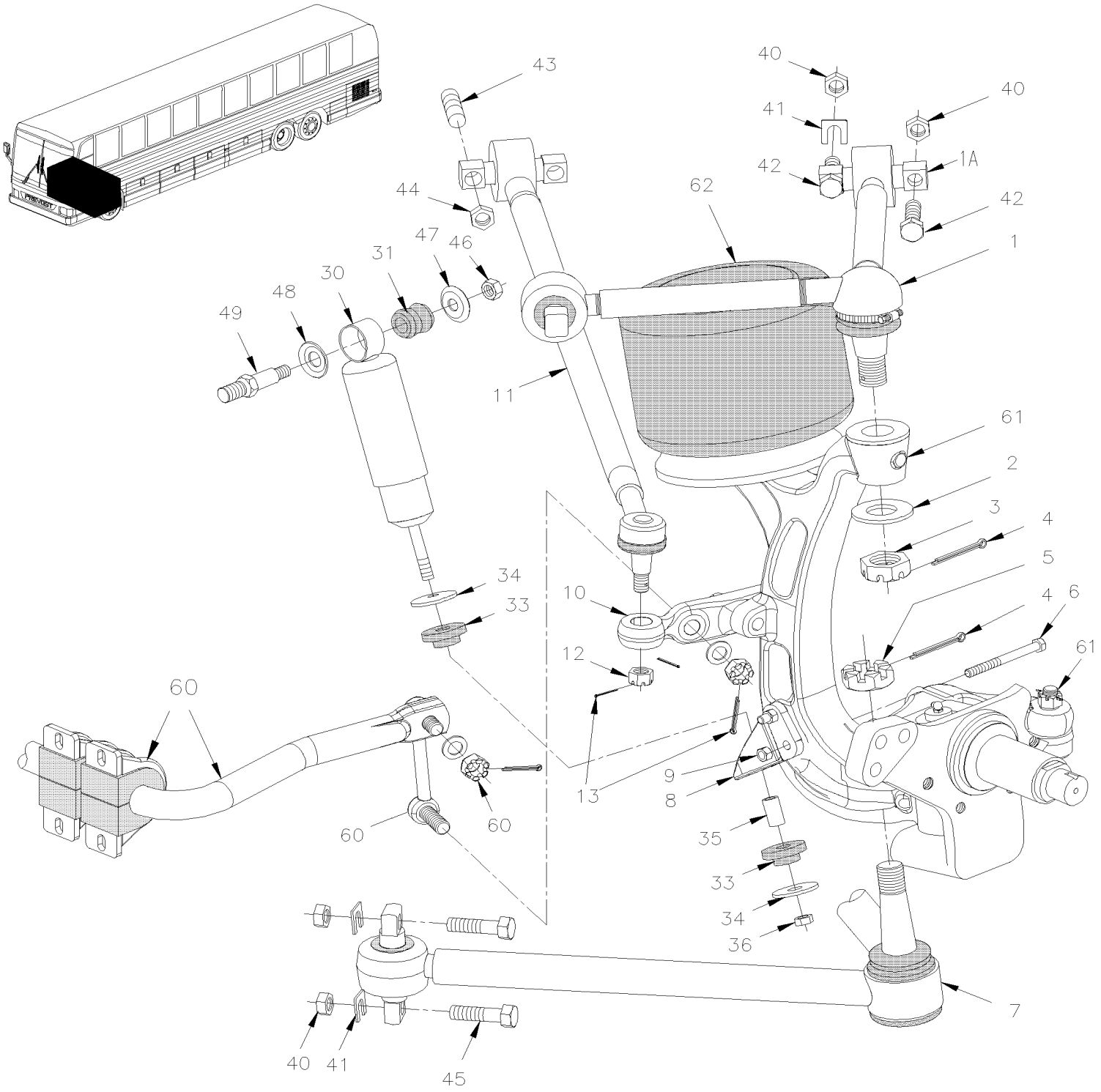

From 4-8165 To 8-9339		Date:07/2024	PAGE:Y2-1605-51

FRONT AXLE - INSTALL W/INDEPENDENT "NDIFS80P" / 18000LBS

Item#	Part	Description	XLII 45	XLII MTH40	XLII MTH45	XLII MTH45E	NOTES
1	611270	UPPER ARM ASSY / L.H. & R.H.	2	2	2	2	
. A	611346	. BUSHING BAR PIN / 20MM 150mm c/c 85MM O.D. x 72MM wide	2	2	2	2	
. A1	611358	. BUSHING BAR PIN / 20MM 150mm c/c 85MM O.D. x 72MM wide	2	2	2	2	
2	5001255	WASHER FL 31.75x54.77x3.175	1	1	1	1	
3	5001321	NUT HEX CSL M30-1.5 17TH CJ	1	1	1	1	
4	502115	PIN, COTTER 3/16 x 2 1/2	2	2	2	2	
5	5001333	NUT HEX CSL M36-1.5 17TH CJ	1	1	1	1	
6	611273	SCREW CAP HEX M14-2.0x135 G8.8 Z050	2	2	2	2	
7	611271	LOWER ARM ASSY / R.H. / W/56 Deg To 6-8832	1	1	1	1	
. NS	611326	. LOWER BEARING BALL ASSY / REPAIR KIT To 6-8832	1	1	1	1	
. NS	611325	. BUSHING BAR PIN / 20MM 150mm c/c 85MM O.D. x 70MM wide To 6-8832	2	2	2	2	
7	611344	LOWER ARM ASSY / R.H / W/58 Deg From 6-8833	1		1	1	
. NS	611326	. LOWER BEARING BALL ASSY / REPAIR KIT From 6-8833	1		1	1	
. NS	611325	. BUSHING BAR PIN / 20MM 150mm c/c 85MM O.D. x 70MM wide From 6-8833	2		2	2	
7	611272	LOWER ARM ASSY / L.H. / W/56 Deg To 6-8832	1	1	1	1	
. NS	611326	. LOWER BEARING BALL ASSY / REPAIR KIT To 6-8832	1	1	1	1	
. NS	611325	. BUSHING BAR PIN / 20MM 150mm c/c 85MM O.D. x 70MM wide To 6-8832	2	2	2	2	
7	611343	LOWER ARM ASSY / L.H / W/58 Deg From 6-8833	1		1	1	
. NS	611326	. LOWER BEARING BALL ASSY / REPAIR KIT From 6-8833	1		1	1	
. NS	611325	. BUSHING BAR PIN / 20MM 150mm c/c 85MM O.D. x 70MM wide From 6-8833	2		2	2	
8	116454	ATTACHMENT / SHOCK ABSORBER	1	1	1	1	
9	502538	NUT HEX STO M14-2.0 Z050	2	2	2	2	
10	661080	UPRIGHT ARM L.H / W/56 Deg To 6-8832	1	1	1	1	
10	661113	UPRIGHT ARM L.H / W/58 Deg From 6-8833	1		1	1	
10	661081	UPRIGHT ARM R.H / W/56 Deg To 6-8832	1	1	1	1	
10	661114	UPRIGHT ARM R.H / W/58 Deg From 6-8833	1		1	1	
11	661093	ROD ASSY / 5TH / W/56 Deg To 6-8832	2	2	2	2	
11	661111	ROD ASSY / 5TH / W/58 Deg From 6-8833	2		2	2	
12	5001325	. NUT HEX CSL M24-1.5 15TH CJ	1	1	1	1	
13	661215	. PIN, COTTER 5MMx40MM	1	1	1	1	
30	630240	SHOCK ABSORBER / SACHS / 475		2	2	2	
. NS	630255	. KIT WASHER & RUBBER BUSHING		1	1	1	
. NS	630257	. BUSHING / RUBBER / (TWO PIECES) 1" x 1.005" I.D.		1	1	1	
30	630136	SHOCK ABSORBER / BLACK To 6-8906	2				A
31	630257	. BUSHING / RUBBER / (TWO PIECES) 1" x 1.005" I.D.	2	2	2	2	
33	630249	KIT WASHER & RUBBER BUSHING To 6-8906	2				A
34	110756	. WASHER CONCAVE 75MM O,D. X 16.5MM I.D To 6-8906	2				A
35	110756	. WASHER CONCAVE 75MM O,D. X 16.5MM I.D To 6-8906	2				A
36	5001579	NUT HEX NYRT M16-1.5 Z050	1	1	1	1	
36	500725	. NUT HEX STO 5/8-18 Z050 To 6-8906	2				A
40	5001252	NUT HEX STO M20-2.5 DP	4	4	4	4	
41	160992	SHIM "U" 6.35 x 39.5MM x 38MM x 20 i.d.	AR	AR	AR	AR	

From 4-8165 To 8-9339		Date:07/2024	PAGE:Y2-1605-51

FRONT AXLE - INSTALL W/INDEPENDENT "NDIFS80P" / 18000LBS

Item#	Part	Description	XLII 45	XLII MTH40	XLII MTH45	XLII MTH45E	NOTES
41	160993	SHIM "U" 3.175x 39.5MM x 38MM x 20 i.d.	AR	AR	AR	AR	
41	661094	SHIM "U" 4.76 x 39.5MM x 38MM x 20 i.d.	AR	AR	AR	AR	
42	983296	SCREW CAP HEX M20-2.5x90 G10.9 ZP	4	4	4	4	
42	5001525	SCREW CAP HEX M20-2.5x100 G10.9 N500	4	4	4	4	
43	130963	STUD M16-2.0x70	2	2	2	2	
44	502588	NUT HEX M16-2.0 ZP	2	2	2	2	
45	5001561	SCREW CAP HEX M20-2.5x250 G10.9 ZP	4	4	4	4	
46	500809	NUT HEX STO M20-2.5 N500	1	1	1	1	
47	5001152	WASHER CON 21.0x50.0x4.5 ZP	1	1	1	1	
48	5001153	WASHER CON 25.5x50.0x4.5 ZP	1	1	1	1	
49	131424	PIN W/TAPER ATTACHMENT M20-2.5	1	1	1	1	
60	**Y2-1616-00**	**SWAY BAR**					
61	**Y2-1005-51**	**FRONT AXLE - INDEPENDENT MODEL "NDIFS80P" / 18000LBS**					
62	**Y2-1601-00**	**BELLOWS - AIR SUSPENSION**					
		A) USE ONLY WITH BUS WITH INDEPENDANT SUSPENSION					

From Y-7046 To 8-9339		Date:07/2024	PAGE:Y2-1610-00
REAR AXLE - INSTALL SUSPENSION			

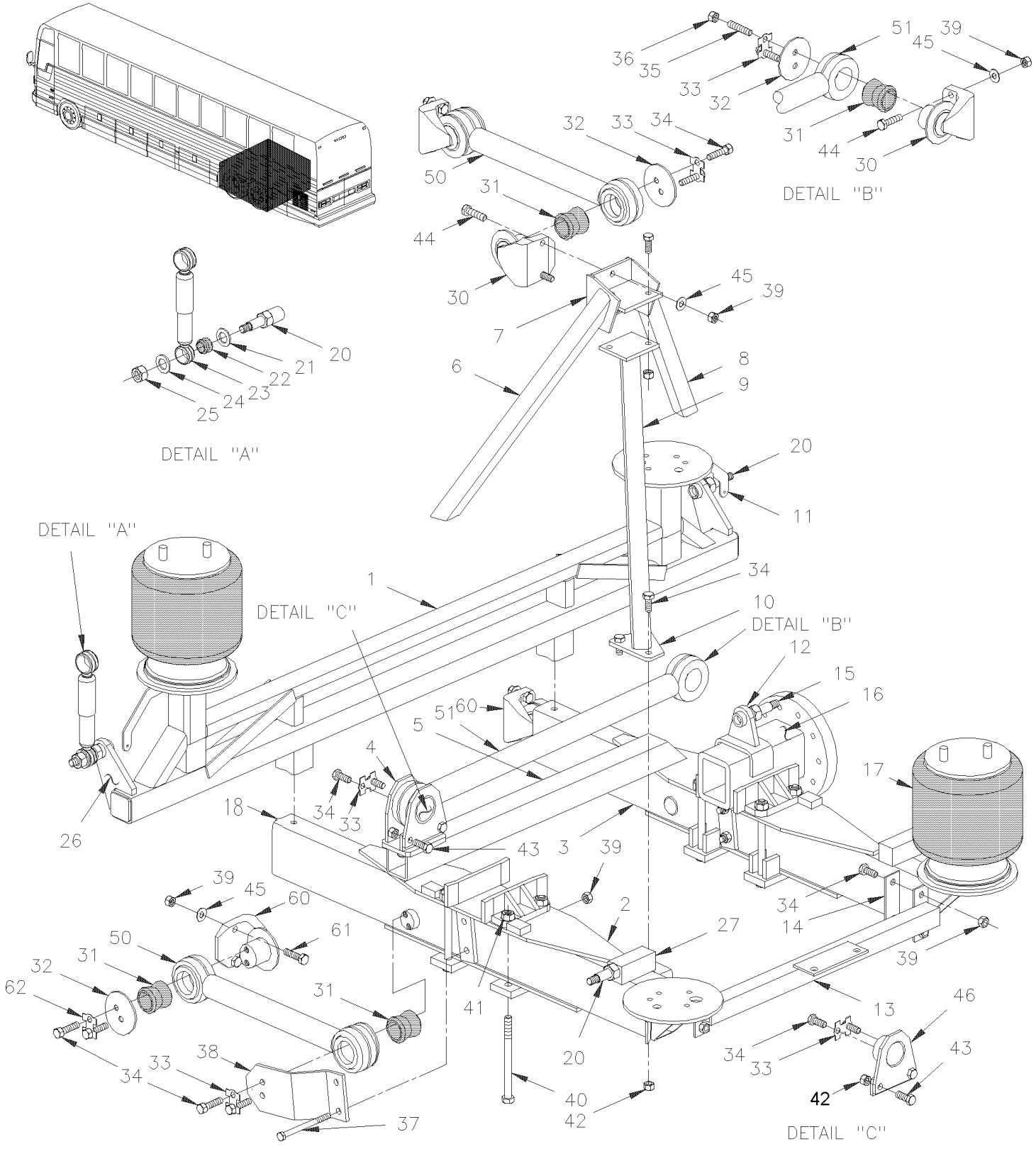

From Y-7046 To 8-9339		Date:07/2024	PAGE:Y2-1610-00

REAR AXLE - INSTALL SUSPENSION

Item#	Part	Description	XLII 45	XLII MTH40	XLII MTH45	XLII MTH45E	NOTES
1	121563P	. REAR DIFFERENTIAL CARRIER ASSY WELDED WITH DISC BRAKE	1		1		
1	121563P	. REAR DIFFERENTIAL CARRIER ASSY WELDED WITH DISC BRAKE To 7-9095		1		1	
1	121790P	. FRONT FRAME ASSY / W/AXLE WITH DISC BRAKE From 7-9096				1	
2	121552P	. BEAM ASSY / L.H. To 5-8395	1	1	1	1	
2	Call order desk	. BEAM ASSY / L.H. From 5-8396 To 5-8535	1	1	1	1	P
2	121651P	. BEAM ASSY / L.H. From 5-8536	1		1		
2	121651P	. BEAM ASSY / L.H. From 5-8536 To 7-9095		1		1	
2	121788P	. BEAM ASSY / L.H. From 7-9096				1	
3	121551P	. BEAM ASSY / R.H. To 5-8395	1	1	1	1	
3	Call order desk	. BEAM ASSY / R.H. From 5-8396 To 5-8535	1	1	1	1	P
3	121652P	. BEAM ASSY / R.H. From 5-8536	1		1		
3	121652P	. BEAM ASSY / R.H. From 5-8536 To 7-9095		1		1	
3	121789P	. BEAM ASSY / R.H. From 7-9096				1	
4	131297	SUPPORT ASSY / (WELDED) To 1-7484	1	1	1	1	
4	131691	SUPPORT ASSY / (WELDED) From 1-7485 To 6-8844	1	1	1	1	
4	131785	SUPPORT ASSY / (WELDED) From 6-8845	1	1	1	1	
5	121433	TUBE / (WELDED) UNDER	1		1		
5	121433	TUBE / (WELDED) UNDER To 7-9095		1		1	
5	121773	TUBE / (WELDED) UNDER From 7-9096				1	
6	121098	BRACE / FRONT L.H.	1	1	1	1	
7	121558	ATTACHMENT / CENTRAL To 1-7499	1	1	1	1	
7	121577P	PLATE TOP TRIPOD ASSY WELDED From 1-7500	1	1	1	1	
8	121099	BRACE / FRONT R.H.	1	1	1	1	
9	121555	TRIPOD ASSY WELDED To 1-7499	1	1	1	1	
9	121576P	TRIPOD ASSY WELDED From 1-7500 To 5-8395	1	1	1	1	
9	121610P	TRIPOD ASSY WELDED From 5-8396	1	1	1	1	
10	121554	PLATE SUPPORT	1	1	1	1	
11	121561	ACTUATOR SUPPORT / TO FIX LINK / (WELDED)	2	2	2	2	
12	121467	ATTACHMENT PIN SWAY BAR / (WELDED TO HOUSING)	2	2	2	2	
13	121342	BAR To 1-7499	1	1	1	1	
13	121575	BAR ASSY From 1-7500	1	1	1	1	
14	121442	ATTACHMENT PLATE	2	2	2	2	
15	131522	PIN W/TAPER ATTACHMENT M20-2.5 / SWAY-BAR	2	2	2	2	
16	**Y2-1105-00**	**REAR AXLE - MODEL "RC23160"**					
17	**Y2-1601-00**	**BELLOWS - AIR SUSPENSION**					
18	121693	CLOSING END / BEAM / (WELDED) From 7-9096				2	
20	131424	PIN W/TAPER ATTACHMENT M20-2.5	4	4	4	4	
21	5001153	WASHER CON 25.5x50.0x4.5 ZP	8	8	8	8	
22	630062	BUSHING / RUBBER / (ONE PIECE) 2" x 1.005" I.D.	8	8	8	8	
23	630127	SHOCK ABSORBER / BLACK W/GAZ To 3-8164	4	4	4	4	
23	630161	SHOCK ABSORBER / YELLOW W/GAZ To 3-8164	4	4	4	4	
23	630134	SHOCK ABSORBER / WHITE To 3-8164	AR	AR	AR	AR	

From Y-7046 To 8-9339		Date:07/2024	PAGE:Y2-1610-00

REAR AXLE - INSTALL SUSPENSION

Item#	Part	Description	XLII 45	XLII MTH40	XLII MTH45	XLII MTH45E	NOTES
23	630253	SHOCK ABSORBER / SACHS / 209 From 4-8165	4	4	4	4	
23	630236	SHOCK ABSORBER / "KONI" (ORANGE)	4	4	4	4	O
. NS	630062	. BUSHING / RUBBER / (ONE PIECE) 2" x 1.005" I.D.	1	1	1	1	O
. NS	630255	. KIT WASHER & RUBBER BUSHING	1	1	1	1	O
24	5001152	WASHER CON 21.0x50.0x4.5 ZP	8	8	8	8	
25	500809	NUT HEX STO M20-2.5 N500	4	4	4	4	
26	171676	RETAINER R.H. / (WELDED)	1	1	1	1	
26	171677	RETAINER L.H. / (WELDED)	1	1	1	1	
27	121157	ATTACHMENT PIN 1"-14 / SHOCK ABSORBER / 126MM LONG W/OFFSET CENTER	2		2		
27	121157	ATTACHMENT PIN 1"-14 / SHOCK ABSORBER / 126MM LONG W/OFFSET CENTER To 7-9095		2		2	
27	171032	SUPPORT 1"-14 / SHOCK ABSORBER / 55MM From 7-9096				2	
30	131065	SUPPORT / ROD / W/2 M16-2 HOLES / 95MM C/C // 150MM SHORT To 5-8461	3	3	3	3	
30	131753	SUPPORT / ROD / W/2 M16-2 HOLES / 95MM C/C // 150MM SHORT From 5-8462 To 6-8950	3	3	3	3	
30	132914	SUPPORT / ROD / W/2 M16-2 HOLES / 95MM C/C // 150MM SHORT From 6-8951	3	3	3	3	
. NS	121890	. TORQUE PLATE / W/2HOLES 17MM I.D. X 90MM C/C From 6-8951	AR	AR	AR	AR	
30	121267	SHIM 26GAGE	AR	AR	AR	AR	
NS	121039	SHIM 20GAGE	AR	AR	AR	AR	
NS	131068	SHIM 14GAGE	AR	AR	AR	AR	
NS	121419	SHIM "U" 14GA SS 133MM x 62MM x 18 i.d.	AR	AR	AR	AR	
NS	121418	SHIM "U" 26 GA SS 133MM x 62MM x 18 i.d.	AR	AR	AR	AR	
31	630021	RUBBER BUSHING "PREVOST"	8	8	8	8	
NS	192380	SHIM WASHER / BUSHING RADIUS ROD 2.795x4.330x.0625 SS	AR	AR	AR	AR	W
32	110681	RETAINER PLATE / IRON 110MM OD W/16.7 @ 38C/C	6	6	6	6	
33	110340	TAB LOCK / W/2 HOLES / W/4 TABS / 18MM I.D. X 38MM C/C	6	6	6	6	
34	502544	SCREW CAP HEX M16-2.0x40 G8.8 Z050 To 6-8844	AR	AR	AR	AR	
34	500813	SCREW CAP HEX M16-2.0x35 G8.8 ZP From 6-8845	AR	AR	AR	AR	
35	130963	STUD M16-2.0x70	2	2	2	2	
36	502588	NUT HEX M16-2.0 ZP	2	2	2	2	
37	502766	SCREW CAP HEX M16-2.0x140 G8.8 Z050 To 5-8395	4	4	4	4	
38	121091	PLATE ATTACHMENT To 5-8395	2	2	2	2	
38	110681	RETAINER PLATE / IRON 110MM OD W/16.7 @ 38C/C From 5-8396	2	2	2	2	
39	500781	NUT HEX STO M16-2.0 DP To 8-9187	AR	AR	AR	AR	
39	5001662	NUT HEX NYRT M16-2.0 G10 Z050 From 8-9188	AR	AR	AR	AR	
40	5001472	SCREW CAP HEX 3/4-16x9 1/2 G5 Z050	8	8	8	8	
41	500251	NUT HEX NYRT 3/4-16 Z050	8	8	8	8	
42	500725	NUT HEX STO 5/8-18 Z050 To 1-7484	2	2	2	2	
42	5001252	NUT HEX STO M20-2.5 DP From 1-7485	2	2	2	2	
43	500880	SCREW CAP HEX 5/8-18x1 3/4 G5 ZP To 1-7484	2	2	2	2	
43	955385	SCREW CAP HEX M20-2.5x45 G8.8 ZP From 1-7485	2	2	2	2	
44	5001369	SCREW CAP HEX M16-2.0x70 G10.9 DP To 5-8395	2	2	2	2	
44	5001224	SCREW CAP HEX M16-2.0x60 G10.9 G500 From 5-8396 To 6-8844	2	2	2	2	
44	5001372	SCREW CAP HEX M16-2.0x50 G10.9 N500 From 6-8845	2	2	2	2	

From Y-7046 To 8-9339		Date:07/2024	PAGE:Y2-1610-00

REAR AXLE - INSTALL SUSPENSION

Item#	Part	Description	XLII 45	XLII MTH40	XLII MTH45	XLII MTH45E	NOTES
45	5001046	WASHER FL .656x1.500x.187	AR	AR	AR	AR	
46	131420	ATTACHMENT To 1-7484	1	1	1	1	
46	131690	ATTACHMENT From 1-7485 To 6-8844	1	1	1	1	
46	131784	ATTACHMENT From 6-8845	1	1	1	1	
50	120868	ROD ASSY / 23 3/8" C/C (593MM)	3		3		
50	120868	ROD ASSY / 23 3/8" C/C (593MM) To 7-9095		3		3	
50	121697	ROD ASSY / 21 1/8" C/C (536.5MM) From 7-9096				3	
51	110648	ROD ASSY / 34 13/16" C/C (885MM) From 1-7485	1	1	1	1	
60	131600	SUPPORT / ROD / W/2 M16-2 HOLES (WELDED) / 114MM C/C // 169MM LONG To 4-8196	2	2	2	2	
60	131693	SUPPORT / ROD / W/2 M16-2 HOLES / 114MM C/C // 169MM LONG From 4-8197 To 6-8950	2	2	2	2	
60	131807	SUPPORT / ROD / W/2 M16-2 HOLES / 144MM C/C // 169MM LONG From 6-8951	2	2	2	2	
61	5001492	SCREW CAP HEX M16-2.0x55 G10.9 ZP To 4-8196	4	4	4	4	
61	5001224	SCREW CAP HEX M16-2.0x60 G10.9 G500 From 4-8197	4	4	4	4	
62	121562	TAB LOCK / W/2 HOLES 17MM I.D. X 90MM C/C To 4-8196	2	2	2	2	
62	121578	TAB LOCK / W/2 HOLES 17MM I.D. X 90MM C/C From 4-8197	2	2	2	2	
		O) OPTION					
		W) IF NEED, USE BETWEEN BUSHING ROD SUPPORT					
		P) CALL ORDER DESK FOR SPECIFIC APPLICATION (V.I.N.)					

From Y-7046 To 8-9339		Date:07/2024	PAGE:Y2-1615-00
TAG AXLE - INSTALL SUSPENSION			

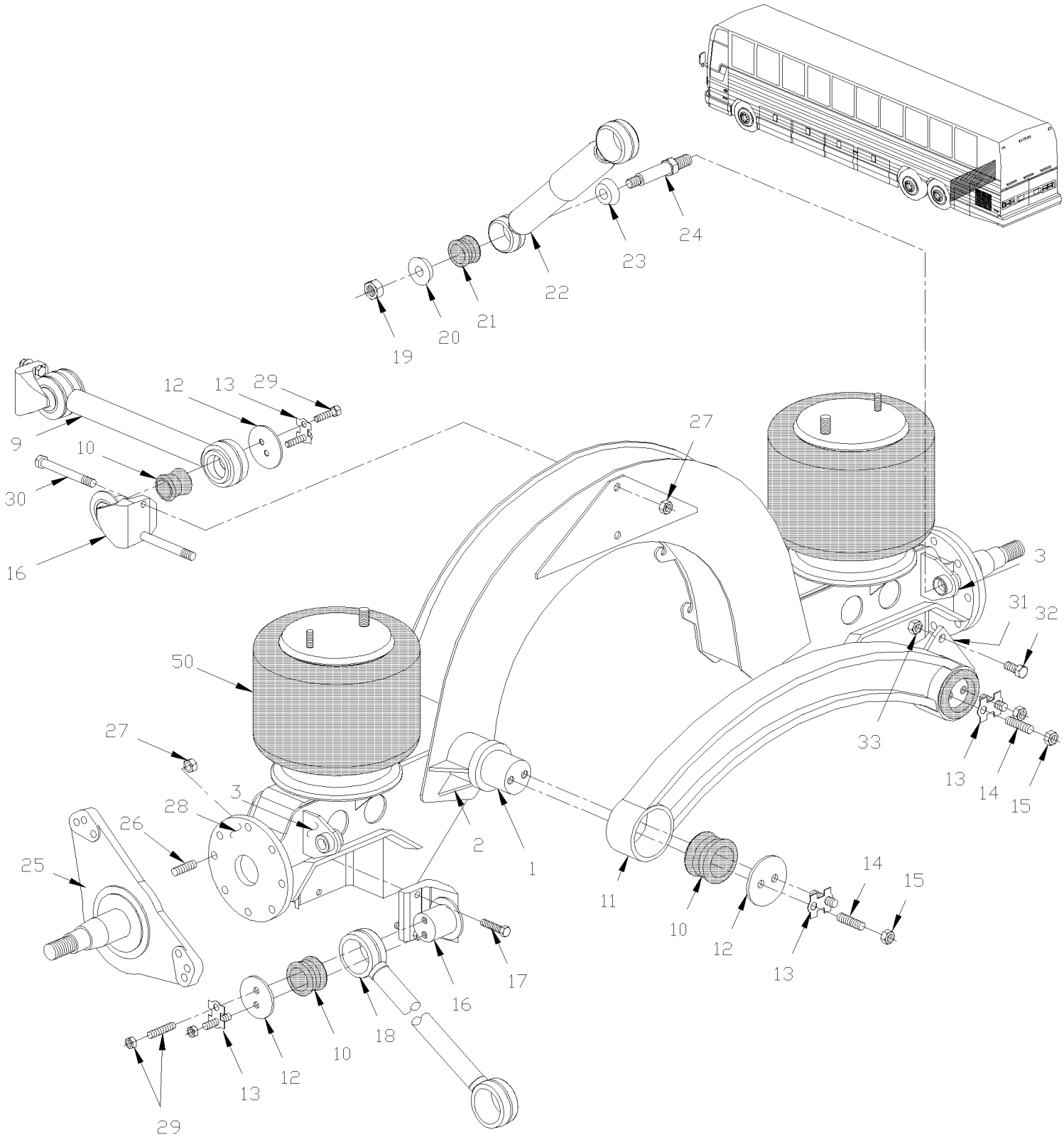

From Y-7046 To 8-9339		Date:07/2024	PAGE:Y2-1615-00

TAG AXLE - INSTALL SUSPENSION

Item#	Part	Description	XLII 45	XLII MTH40	XLII MTH45	XLII MTH45E	NOTES
	121544P	AXLE ASSY W/AUTOMATIC TRANSMISSION	1				
	121544P	AXLE ASSY W/AUTOMATIC TRANSMISSION To 2-7855			1		
	121547P	AXLE ASSY W/AUTOMATIC TRANSMISSION From 2-7856			1		
	121544P	AXLE ASSY W/AUTOMATIC TRANSMISSION To 7-9095		1		1	
	121677P	AXLE ASSY W/AUTOMATIC TRANSMISSION From 7-9096				1	
1	121341	. SHAFT / TO FIX LATERAL ROD W/AXLE	1		1		
1	121341	. SHAFT / TO FIX LATERAL ROD W/AXLE To 7-9095		1		1	
1	121680	. SHAFT / TO FIX LATERAL ROD W/AXLE From 7-9096				1	
2	121268	. PLATE REINFORCEMENT (WELDED)	1		1		
2	121268	. PLATE REINFORCEMENT (WELDED) To 7-9095		1		1	
2	121682	. PLATE REINFORCEMENT (WELDED) From 7-9096				1	
NS	121706	. PLATE REINFORCEMENT (WELDED)		1		1	
3	121545	. ATTACHMENT / SHOCK ABSORBER PIN To 1-7594	2	2	2	2	
3	121580	. ATTACHMENT / SHOCK ABSORBER PIN From 1-7595	2	2	2	2	
. NS	171032	. . SUPPORT 1"-14 / SHOCK ABSORBER / 55MM From 1-7595	1	1	1	1	
9	120868	ROD ASSY / 23 3/8" C/C (593MM)	1	1	1	1	
10	630021	RUBBER BUSHING "PREVOST"	6	6	6	6	
NS	192380	SHIM WASHER / BUSHING RADIUS ROD 2.795x4.330x.0625 SS	AR	AR	AR	AR	W
11	131370	ROD ASSY / 35" C/C (889MM) / CASTING		1		1	
11	131282	ROD ASSY / 35" C/C (889MM) / CASTING To 3-8164	1		1		
11	131749	ROD ASSY / 35" C/C (889MM) / CASTING From 4-8165	1		1		
11	131370	ROD ASSY / 35" C/C (889MM) / CASTING	1				A
12	110681	RETAINER PLATE / IRON 110MM OD W/16.7 @ 38C/C	6	6	6	6	
13	110340	TAB LOCK / W/2 HOLES / W/4 TABS / 18MM I.D. X 38MM C/C	6	6	6	6	
14	130963	STUD M16-2.0x70	12	12	12	12	
15	500781	NUT HEX STO M16-2.0 DP To 8-9187	18	18	18	18	
15	5001662	NUT HEX NYRT M16-2.0 G10 Z050 From 8-9188	18	18	18	18	
16	131065	SUPPORT / ROD / W/2 M16-2 HOLES / 95MM C/C // 150MM SHORT To 5-8461	3	3	3	3	
16	131753	SUPPORT / ROD / W/2 M16-2 HOLES / 95MM C/C // 150MM SHORT From 5-8462 To 6-8950	3	3	3	3	
16	132914	SUPPORT / ROD / W/2 M16-2 HOLES / 95MM C/C // 150MM SHORT From 6-8951	3	3	3	3	
. NS	121890	. TORQUE PLATE / W/2HOLES 17MM I.D. X 90MM C/C From 6-8951	AR	AR	AR	AR	
17	5001369	SCREW CAP HEX M16-2.0x70 G10.9 DP To 6-8950	4	4	4	4	
17	5001224	SCREW CAP HEX M16-2.0x60 G10.9 G500 From 6-8951	4	4	4	4	
17	500781	NUT HEX STO M16-2.0 DP	4	4	4	4	
18	121358	ROD ASSY W/CHAIN HOOK / 23 3/8" C/C (593MM)	2	2	2	2	
19	500809	NUT HEX STO M20-2.5 N500	4	4	4	4	
20	5001152	WASHER CON 21.0x50.0x4.5 ZP	4	4	4	4	
21	630062	BUSHING / RUBBER / (ONE PIECE) 2" x 1.005" I.D.	4	4	4	4	
22	630127	SHOCK ABSORBER / BLACK W/GAZ To 3-8164	2	2	2	2	
22	630161	SHOCK ABSORBER / YELLOW W/GAZ To 3-8164	2	2	2	2	
22	630253	SHOCK ABSORBER / SACHS / 209 From 4-8165	2	2	2	2	
22	630236	SHOCK ABSORBER / "KONI" (ORANGE)	2	2	2	2	O

From Y-7046 To 8-9339		Date:07/2024	PAGE:Y2-1615-00

TAG AXLE - INSTALL SUSPENSION

Item#	Part	Description	XLII 45	XLII MTH40	XLII MTH45	XLII MTH45E	NOTES
. NS	630062	. BUSHING / RUBBER / (ONE PIECE) 2" x 1.005" I.D.	1	1	1	1	O
. NS	630255	. KIT WASHER & RUBBER BUSHING	1	1	1	1	O
23	500833	WASHER CON 25.5x60.0x2.5 ZP	4	4	4	4	
NS	5001153	WASHER CON 25.5x50.0x4.5 ZP	4	4	4	4	
24	131424	PIN W/TAPER ATTACHMENT M20-2.5	4	4	4	4	
25	611216	SPINDLE / WITH MODEL "G.K.N." (TS6) To 3-8164	2	2	2	2	
25	611302	SPINDLE / WITH MODEL "G.K.N." (TS8U UNITISED) From 4-8165	8	8	8	8	
26	611048	STUD / M16-2.0 x 60MM	8	8	8	8	
27	502588	NUT HEX M16-2.0 ZP	8	8	8	8	
NS	502884	WASHER LO SPT 16.2x27.4x3.5 N500	8	8	8	8	
28	121203	SHIM / CAMBER ADJUSTMENT 0.117 DEGRES / SPINDLE & AXLE	AR	AR	AR	AR	
NS	121240	SHIM / CAMBER ADJUSTMENT 0.250 DEGRES / SPINDLE & AXLE	AR	AR	AR	AR	
29	502544	SCREW CAP HEX M16-2.0x40 G8.8 Z050 To 6-8844	4	4	4	4	
29	500813	SCREW CAP HEX M16-2.0x35 G8.8 ZP From 6-8845	4	4	4	4	
30	5001370	SCREW CAP HEX M16-2.0x180 G10.9 G500	2	2	2	2	
31	131420	ATTACHMENT To 1-7484	1	1	1	1	
31	131690	ATTACHMENT From 1-7485 To 6-8844	1	1	1	1	
31	131784	ATTACHMENT From 6-8845	1	1	1	1	
32	500880	SCREW CAP HEX 5/8-18x1 3/4 G5 ZP To 1-7484	2	2	2	2	
32	955385	SCREW CAP HEX M20-2.5x45 G8.8 ZP From 1-7485	2	2	2	2	
33	500725	NUT HEX STO 5/8-18 Z050 To 1-7484	2	2	2	2	
33	5001252	NUT HEX STO M20-2.5 DP From 1-7485	2	2	2	2	
40	130940	ATTACHMENT KIT	AR	AR	AR	AR	
40	130846	. ATTACHMENT ASSY W/STUD	1	1	1	1	
41	130760	. . STUD 2 3/4" X 1 1/4-12 BOTH END	1	1	1	1	
42	131158	. TAB LOCK / W/1 HOLE 1.265" I.D.	1	1	1	1	
43	500280	. NUT HEX 1 1/4-12x1 1/16 ZP	1	1	1	1	
44	500725	NUT HEX STO 5/8-18 Z050	2	2	2	2	
45	500880	SCREW CAP HEX 5/8-18x1 3/4 G5 ZP	2	2	2	2	
50	**Y2-1601-00**	**BELLOWS - AIR SUSPENSION**					
		A) USE WITH "EATON" TRANSMISSION & "ZF" TRANSMISSION					
		O) OPTION					
		R) REFERENCE NUMBER PRODUCTION USE ONLY					
		W) IF NEED, USE BETWEEN BUSHING ROD SUPPORT					

From Y-7046 To 8-9339		Date:07/2024	PAGE:Y2-1615-10
TAG AXLE - LIFTING			

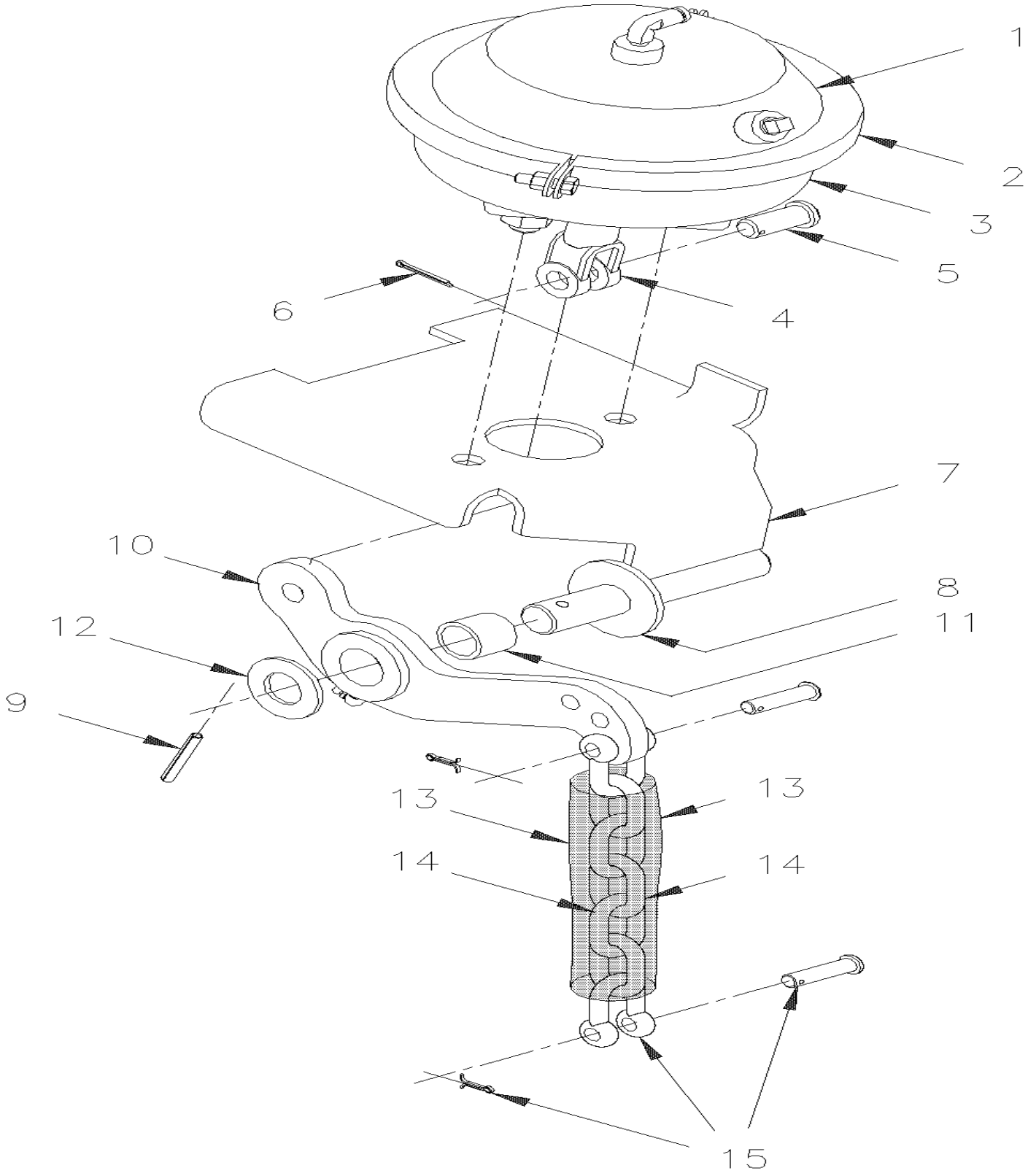

From Y-7046 To 8-9339		Date:07/2024	PAGE:Y2-1615-10

TAG AXLE - LIFTING

Item#	Part	Description	XLII 45	XLII MTH40	XLII MTH45	XLII MTH45E	NOTES
1	641425	BRAKE CHAMBER ASSY / TYPE 36	2	2	2	2	
2	641067	. CLAMP TYPE 36	1	1	1	1	
3	640979	. DIAPHRAGM / TYPE 36	1	1	1	1	
3	641066	. BOOT RUBBER	1	1	1	1	
4	640130	. YOKE 5/8-18x1 3/8 C/Lx9/16Wx5/8	1	1	1	1	
5	502028	. . PIN, CLEVIS 5/8 x 3/4	1	1	1	1	
6	502102	. . PIN, COTTER 1/8 x 1	1	1	1	1	
NS	641426	. SHIELD, ROD CENTER HOLE	1	1	1	1	
7	172277P	BRACKET / R.H. To 7-9094	1	1		1	
7	172277P	BRACKET / R.H.			1		
7	173154	BRACKET / R.H. From 7-9095				1	
7	172278P	BRACKET / L.H. To 7-9094	1	1		1	
7	172278P	BRACKET / L.H.			1		
7	173155P	BRACKET / L.H. From 7-9095				1	
8	120551	. PIN / WELDED To 1-7610	1	1	1	1	
8	121590	. PIN SS / WELDED From 1-7611	1	1	1	1	
9	502106	PIN, COTTER 1/4 x 2	1	1	1	1	
10	131313	LEVER ASSY To 1-7610	2	2	2	2	
10	131701	LEVER ASSY From 1-7611	2	2	2	2	
11	507055	. BUSHING OIL 1 1/4 O.D. X 1 I.D. X 1 LG	1	1	1	1	
11	131699	. BUSHING BRASS / W/GROOVE INSIDE 31.94 O.D. x 25.5 I.D. x 25.4	1	1	1	1	
12	500456	WASHER FL 1.062x2.000x.134 Z050	1	1	1	1	
13	121123	TUBE COVERING CHAIN 290MM	1	1	1	1	
. NS	5001503	. TUBE, PVC / CLEAR / 1 1/2" I.D./ S.L.	AR	AR	AR	AR	
14	121122	CHAIN / 340MM	1	1	1	1	
15	505064	SHACKLE CHAIN 3/8	2	2	2	2	

From Y-7046 To 8-9339		Date:07/2024	PAGE:Y2-1616-00
SWAY BAR			

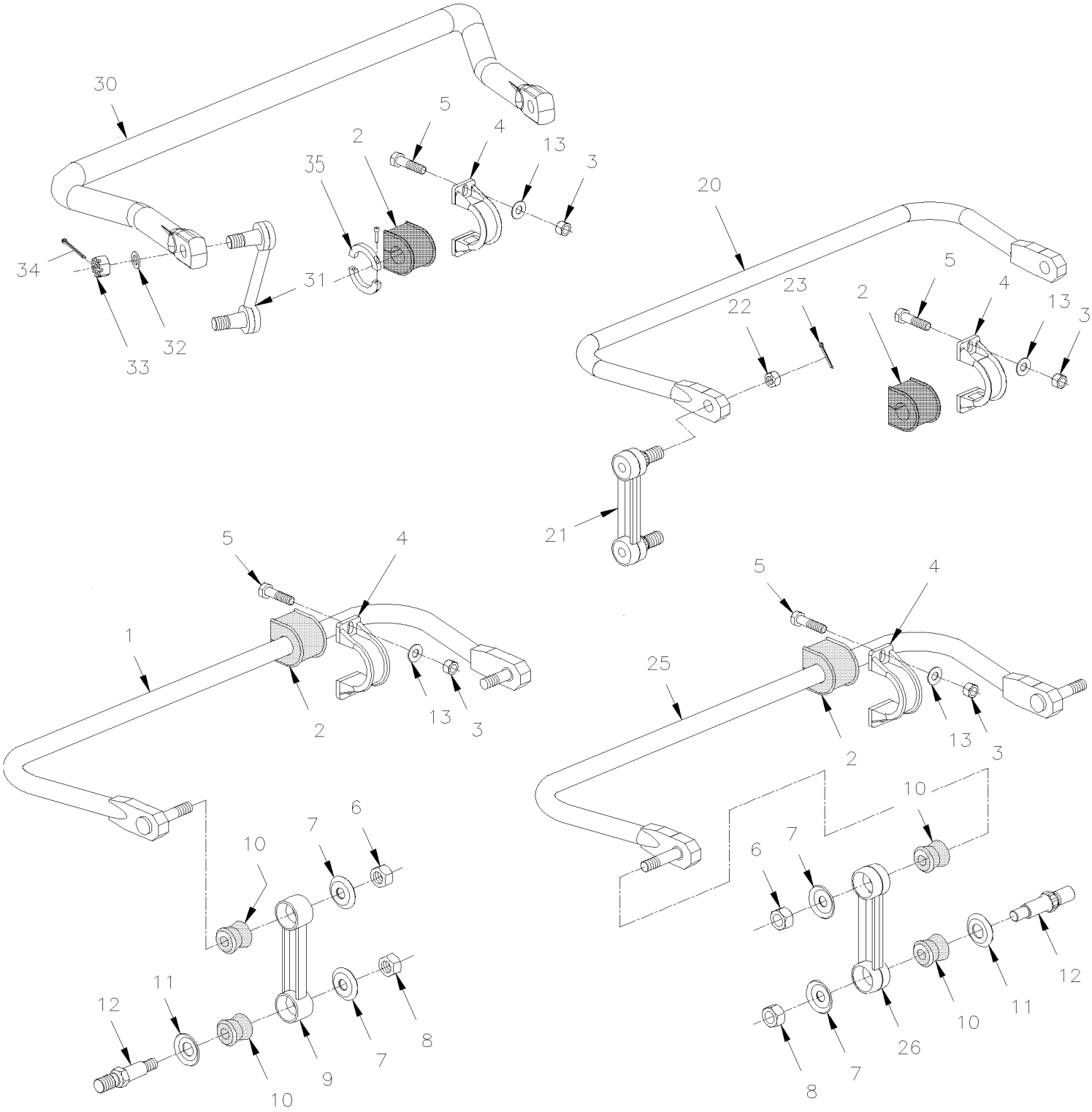

From Y-7046 To 8-9339		Date:07/2024	PAGE:Y2-1616-00

SWAY BAR

Item#	Part	Description	XLII 45	XLII MTH40	XLII MTH45	XLII MTH45E	NOTES
1	131019	SWAY BAR ASSY / 1 1/2" O.D. X 848MM		1	1	1	R
. A	131520	. STUD 1 1/4" O.D.		2	2	2	R
NS	131520	. STUD 1 1/4" O.D.	2	2	2	2	R
2	630020	BUSHING / RUBBER / USE WITH SWAY BAR 1 3/4"	4	4	4	4	
2	130953	BUSHING / RUBBER / USE WITH SWAY BAR 1 1/2"		4	4	4	
3	500811	NUT HEX STO M12-1.75 G500	8	8	8	8	
4	630145	COLLAR / IRON / 2x.472" HOLE 4 5/8 C/C	4	4	4	4	
NS	130077	SERV. KIT SWAYBAR COLLAR 38MM, 1.5" DI		1	1	1	
. NS	130076	. MACHINED NODULAR COLLAR		4	4	4	
. NS	130953	. BUSHING / RUBBER / USE WITH SWAY BAR 1 1/2"		4	4	4	
. NS	5001688	. SCREW CAP HEX M12-1.75x100 G10.9 G500		8	8	8	
. NS	5001695	. NUT HEX NYRT M12-1.75 Z050		8	8	8	
. NS	5002008	. WASHER FL 13.0x35.0x5.0 N500		8	8	8	
. NS	IS-23019	. SEE ENGLISH INSTRUCTION SHEET		1	1	1	
. NS	FI-23019	. SEE FRENCH INSTRUCTION SHEET		1	1	1	
NS	130078	SERV. KIT SWAYBAR COLLAR 45MM 1,75" DI	1	1	1	1	
. NS	130076	. MACHINED NODULAR COLLAR	4	4	4	4	
. NS	630020	. BUSHING / RUBBER / USE WITH SWAY BAR 1 3/4"	4	4	4	4	
. NS	5001688	. SCREW CAP HEX M12-1.75x100 G10.9 G500	8	8	8	8	
. NS	5001695	. NUT HEX NYRT M12-1.75 Z050	8	8	8	8	
. NS	5002008	. WASHER FL 13.0x35.0x5.0 N500	8	8	8	8	
. NS	IS-23019	. SEE ENGLISH INSTRUCTION SHEET	1	1	1	1	
. NS	FI-23019	. SEE FRENCH INSTRUCTION SHEET	1	1	1	1	
5	500806	SCREW CAP HEX M12-1.75X35 G10.9 G500	8	8	8	8	
6	500809	NUT HEX STO M20-2.5 N500	2	2	2	2	
7	5001152	WASHER CON 21.0x50.0x4.5 ZP	4	4	4	4	
8	500809	NUT HEX STO M20-2.5 N500	2	2	2	2	
9	630146	LINK ASSY / 7" C/C / IRON	1	1	1	1	
10	506678	BUSHING / POLYURETHANE / (TWO PIECES) RED 1" x 1.005" I.D.	4	4	4	4	
11	5001153	WASHER CON 25.5x50.0x4.5 ZP	4	4	4	4	
12	131522	PIN W/TAPER ATTACHMENT M20-2.5 / SWAY-BAR	2	2	2	2	B
13	500011	WASHER FL / HARDENED 13.0x24.0x3.0 STL	4	4	4	4	
20	131570	SWAY BAR ASSY / 1 3/4" O.D. X 1090MM To 6-8906	1				
21	630230	LINK SWAY BAR / 4" / 101.60MM C/C To 5-8360	2				
21	630248	LINK SWAY BAR / 4" C/C From 5-8361	2				
21	630267	LINK SWAY BAR / 4" / 101.60MM C/C	1				
21	110762	SPACER WASHER 1" I.D. X 1 1/2" O.D. X 16GA To 2-7929	2				C
22	500736	NUT HEX SLT 3/4-16 To 6-8906	2				
22	5001553	NUT HEX CSL M20-1.5 N500	2				
23	502111	PIN, COTTER 1/8 x 1 1/2 SS To 6-8906	1				
25	131386P	SWAY BAR ASSY / 1 3/4" O.D. X 1050MM To 3-8164	1	1	1	1	A
26	630147	LINK ASSY / 12 1/2" C/C / IRON To 3-8164	2	2	2	2	

From Y-7046 To 8-9339		Date:07/2024	PAGE:Y2-1616-00

SWAY BAR

Item#	Part	Description	XLII 45	XLII MTH40	XLII MTH45	XLII MTH45E	NOTES
30	138550	SWAY BAR 1 3/4" O.D. 1186.5MM / W/18000LBS / W/56 Deg From 4-8165 To 6-8832	1	1	1	1	
30	131755	SWAY BAR 1 3/4" O.D. 1175MM / / W/58 Deg From 6-8833	1	1	1	1	
31	630246	LINK ASSY / 150MM C/C / W/18000LBS From 4-8165	2	2	2	2	
32	502558	WASHER FL 21.0x37.0x3.0 G500 From 4-8165	4	4	4	4	
33	5001553	NUT HEX CSL M20-1.5 N500 From 4-8165	4	4	4	4	
34	502104	PIN, COTTER 5/32 x 2 From 4-8165	4	4	4	4	
35	563042	COLLAR 1 3/4" I.D. From 4-8165	2	2	2	2	D
NS	MI03-12	SEE MAINTENANCE INFORMATION	1	1	1	1	
NS	MI03-13	SEE MAINTENANCE INFORMATION	1	1	1	1	
		A) MOUNTED WITH EXTERIOR STUD, ON INDEPENDANT SUSPENSION					
		B) THIS PIN IS 3MM SHORTER ON BUSHING SIDE AND BLACK PAINTED FOR EASY IDENTIFICATION					
		C) BETWEEN LINK AND BELLOWS SUPPORT					
		D) SIDE OF RUBBER BUSHING WITH ITEMS # 20 WITH I BEAM RIGID SUSPENSION AND ITEM # 30 INDEPENDENT SUSPENSION					
		R) REAR SUSPENSION					

From Y-7046 To 6-8906		Date:07/2024	PAGE:Y2-1620-00
HEIGHT CONTROL VALVE			

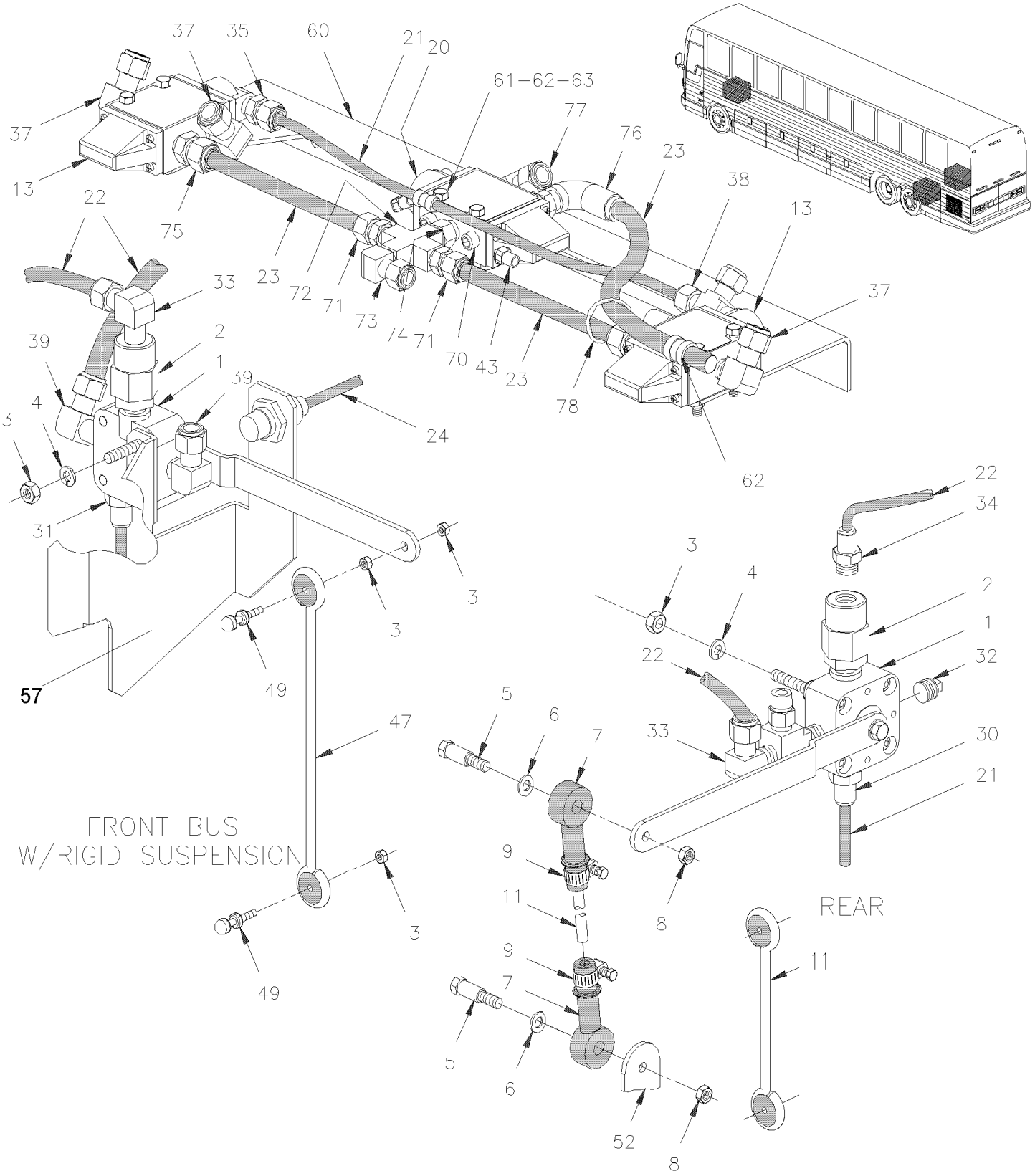

From Y-7046 To 6-8906		Date:07/2024	PAGE:Y2-1620-00
HEIGHT CONTROL VALVE			

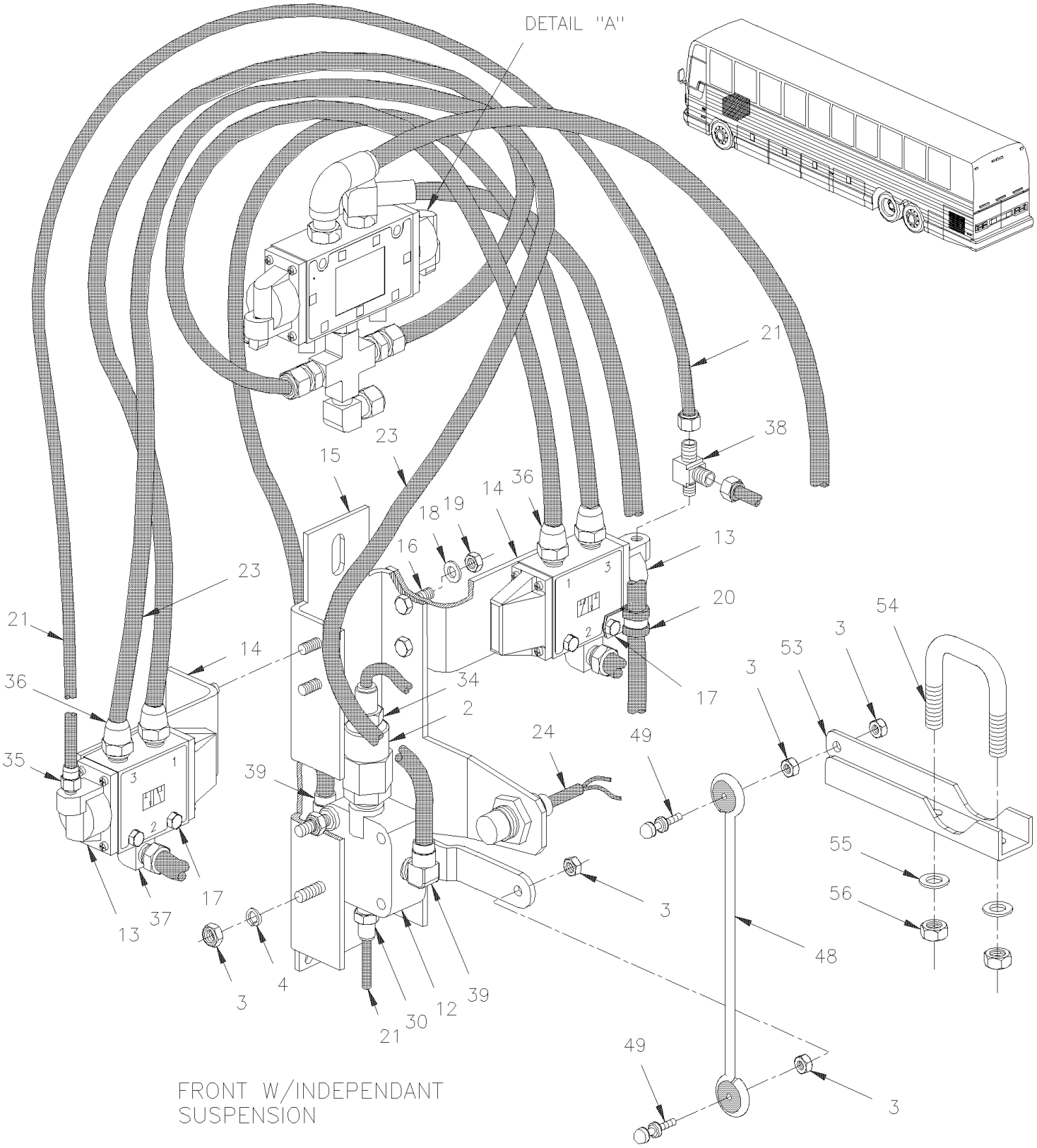

From Y-7046 To 6-8906		Date:07/2024	PAGE:Y2-1620-00
HEIGHT CONTROL VALVE			

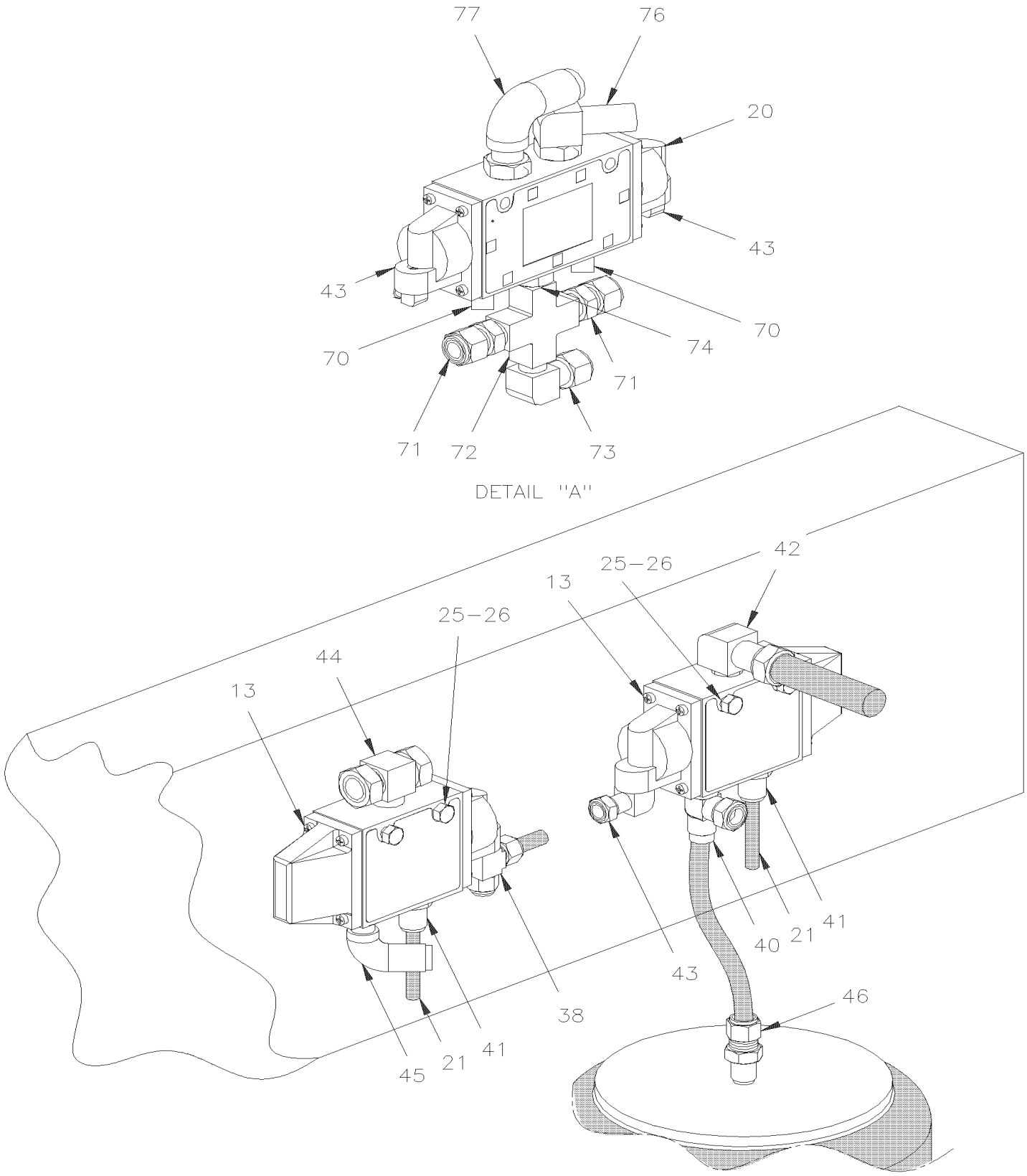

From Y-7046 To 6-8906		Date:07/2024	PAGE:Y2-1620-00

HEIGHT CONTROL VALVE

Item#	Part	Description	XLII 45	XLII MTH40	XLII MTH45	XLII MTH45E	NOTES
1	630156	VALVE, HEIGHT CONTROL "BARKSDALE"	2				
2	640135	VALVE, CHECK 1/4 NPT	1				
3	500769	NUT HEX 1/4-20 Z050	2				
4	500473	WASHER LO SPT .262x.489x.062 Z050	2				
5	630137	SCREW SHR CAP HEX 5/16" I.D. x 1/4-20	2				
6	500441	WASHER FL .312x.734x.065 Z050	2				
7	630117	ROD END / BLACK RUBBER 5/16" I.D.	2				
8	502716	NUT HEX NYRT 1/4-20	2				
9	504014	HOSE CLAMP / 1/4"-5/8" SS / HM-4	2				
11	131351	ROD LINK / 140MM	2				
11	630263	LINK ASSY 317MM C/C 11 1/2"	AR				
. A	N8889244	. GROMMET / LINK	2				
. B	630250	. STUD RETAINER 1/4-20 X 1"	2				
. NS	500769	. NUT HEX 1/4-20 Z050	4				
. NS	500473	. WASHER LO SPT .262x.489x.062 Z050	4				
12	630157	VALVE, HEIGHT CONTROL "BARKSDALE" / FRONT To 1-7418	1				A
12	630237	VALVE, HEIGHT CONTROL "BARKSDALE" / FRONT From 1-7419	1				A
13	641274	VALVE, 3 WAYS, 2 POSITIONS N.C.	2				
14	131319	SUPPORT VALVE	2				
15	131468	SUPPORT HEIGHT CONTROL VALVE To 1-7418	1				
15	131621	SUPPORT HEIGHT CONTROL VALVE / WHITOUT "KNEELING" From 1-7419	1				
15	131507	SUPPORT HEIGHT CONTROL VALVE / W/KNEELING (AS SHOWN) To 1-7418	1				
15	131613	SUPPORT HEIGHT CONTROL VALVE / W/KNEELING From 1-7419	1				
16	502622	SCREW CAP HEX M6-1.0x20 SS BK	4				
17	502656	SCREW CAP HEX M6-1.0x50 SS	4				
18	502570	WASHER LO SPT 6.1x11.8x1.6 SS	8				
19	502565	NUT HEX M6-1.0 SS	8				
20	641531	VALVE, 5 WAYS, 3 POSITIONS	1				
. NS	641186	. SPOOL	1				
21	503402	TUBE, NYLON 1/4 O.D. / BLACK S.L.	AR				
22	503471	TUBE, NYLON 3/8 O.D. / BLUE S.L.	AR				
23	503517	TUBE, NYLON 1/2 O.D. / BLUE S.L.	AR				
24	131535	SWITCH PROXIMITY ASSY 1520MM	1				
25	500625	SCREW TC CAP HEXW 1/4-20x2 Z050	AR				
26	500440	WASHER FL .250x.562x.065 Z050	AR				
30	641332	MALE CONNECTOR / PUSH-IN FITTING / #4x1/4NPT-M BR	1				
31	641926	SILENCER / MUFFLER / 1/4NPT-M	1				
32	501304	PLUG SQUARE HEAD / PIPE FITTING / 1/4NPT-M BR	1				
33	641372	MALE ELBOW 90° NON-SWIVEL / PUSH-IN FITTING / #6x1/4NPT-M BR	1				
34	641331	MALE CONNECTOR / PUSH-IN FITTING / #6x1/4NPT-M BR	1				
35	641242	MALE CONNECTOR / PUSH-IN FITTING / #4x1/8NPT-M BR	1				
36	641381	MALE CONNECTOR / PUSH-IN FITTING / #8x3/8NPT-M BR	4				

From Y-7046 To 6-8906		Date:07/2024	PAGE:Y2-1620-00

HEIGHT CONTROL VALVE

Item#	Part	Description	XLII 45	XLII MTH40	XLII MTH45	XLII MTH45E	NOTES
37	641040	MALE ELBOW 90º / NTA FITTING / #8x3/8NPT-M BR	2				
38	641002	MALE RUN TEE / NTA FITTING / #4x#4x1/8NPT-M BR	1				
39	641373	MALE ELBOW 90° NON-SWIVEL / PUSH-IN FITTING / #8x1/4NPT-M BR	2				
40	641388	MALE RUN TEE NON-SWIVEL / PUSH-IN FITTING / #6x#6x3/8NPT-M BR	1				
41	641347	MALE CONNECTOR / PUSH-IN FITTING / #4x3/8NPT-M BR	3				
42	641375	MALE ELBOW 90° NON-SWIVEL / PUSH-IN FITTING / #6x3/8NPT-M BR	1				
43	641369	MALE ELBOW 90° NON-SWIVEL / PUSH-IN FITTING / #4x1/8NPT-M BR	2				
44	641008	MALE BRANCH TEE / NTA FITTING / #6x#6x3/8NPT-M BR	1				
45	641367	MALE ELBOW 45° NON-SWIVEL / PUSH-IN FITTING / #6x3/8NPT-M BR	1				
46	641384	MALE CONNECTOR / PUSH-IN FITTING / #10x1/2NPT-M BR	1				A
46	641382	MALE CONNECTOR / PUSH-IN FITTING / #6x1/2NPT-M BR	1				
47	630232	LINK ASSY 265MM C/C 10 1/2"	1				
. A	N8889244	. GROMMET / LINK	2				
. B	630250	. STUD RETAINER 1/4-20 X 1"	2				
. NS	500479	. WASHER LO INT .448x.789x.040 Z050	4				
. NS	500473	. WASHER LO SPT .262x.489x.062 Z050	4				
48	630231	LINK ASSY 185MM C/C 7 1/4"	1				
. A	N8889244	. GROMMET / LINK	2				
. B	630250	. STUD RETAINER 1/4-20 X 1"	2				
. C	500247	. NUT HEX 1/4-20 N500	4				
. D	500473	. WASHER LO SPT .262x.489x.062 Z050	4				
49	630250	. STUD RETAINER 1/4-20 X 1"	2				
50	172114	SUPPORT / FRONT HEIGHT CONTROL VALVE	1				
51	110594	PLATE, RETAINER	1				
52	121561	ACTUATOR SUPPORT / TO FIX LINK / (WELDED)	2				
53	110679	ACTUATOR LEVER	1				
54	504635	U-BOLT 1 3/4" I.D. x 2 3/4" x 5/16-18	1				
55	500476	WASHER LO SPT .317x.586x.078 Z050	2				
56	500778	NUT HEX 5/16-18 N500	2				
57	172493	SUPPORT HEIGHT CONTROL VALVE (WELDED)	1				
60	131591	SUPPORT VALVE	1				
61	952625	CLAMP / 3/8" I.D.	1				
62	952627	CLAMP / 1/2" I.D.	1				
63	502793	SCREW CAP HEX M6-1.0x45 G8.8 Z050	6				
64	502573	WASHER FL 6.4x12.5x1.6 SS	6				
65	502511	NUT HEX NYRT M6-1.0 Z050	6				
66	500440	WASHER FL .250x.562x.065 Z050	1				
70	501305	PLUG SQUARE HEAD / PIPE FITTING / 3/8NPT-M BR	2				
70	501449	PLUG HEXS / PIPE FITTING / 3/8NPT-M STL	2				
71	641173	MALE CONNECTOR / NTA FITTING / #8x1/4NPT-M BR	1				
72	501902	CROSS / PIPE FITTING / 1/4NPT-Fx1/4NPT-Fx 1/4NPT-Fx1/4NPT-F BR	1				
73	641371	MALE ELBOW 90° NON-SWIVEL / PUSH-IN FITTING / #4x1/4NPT-M BR	1				

From Y-7046 To 6-8906		Date:07/2024	PAGE:Y2-1620-00

HEIGHT CONTROL VALVE

Item#	Part	Description	XLII 45	XLII MTH40	XLII MTH45	XLII MTH45E	NOTES
74	501749	NIPPLE REDUCER HEX / PIPE FITTING / 3/8NPT-Mx1/4NPT-Mx1 13/32 BR	1				
75	640991	MALE CONNECTOR / NTA FITTING / #8x3/8NPT-M BR	1				
76	641428	MALE ELBOW 90° SWIVEL / PUSH-IN FITTING / #8x3/8NPT-M BR	1				
77	641368	MALE ELBOW 45° NON-SWIVEL / PUSH-IN FITTING / #8x3/8NPT-M BR	1				
78	504637	CABLE TIE / 3/16" x 13"	AR				
		A) W/INDEPENDANT SUSPENSION SYSTEM					

From Y-7046 To 6-8906		Date:07/2024	PAGE:Y2-1620-10
HIGH-BUOY, LOW BUOY & "KNEELING" VALVE			

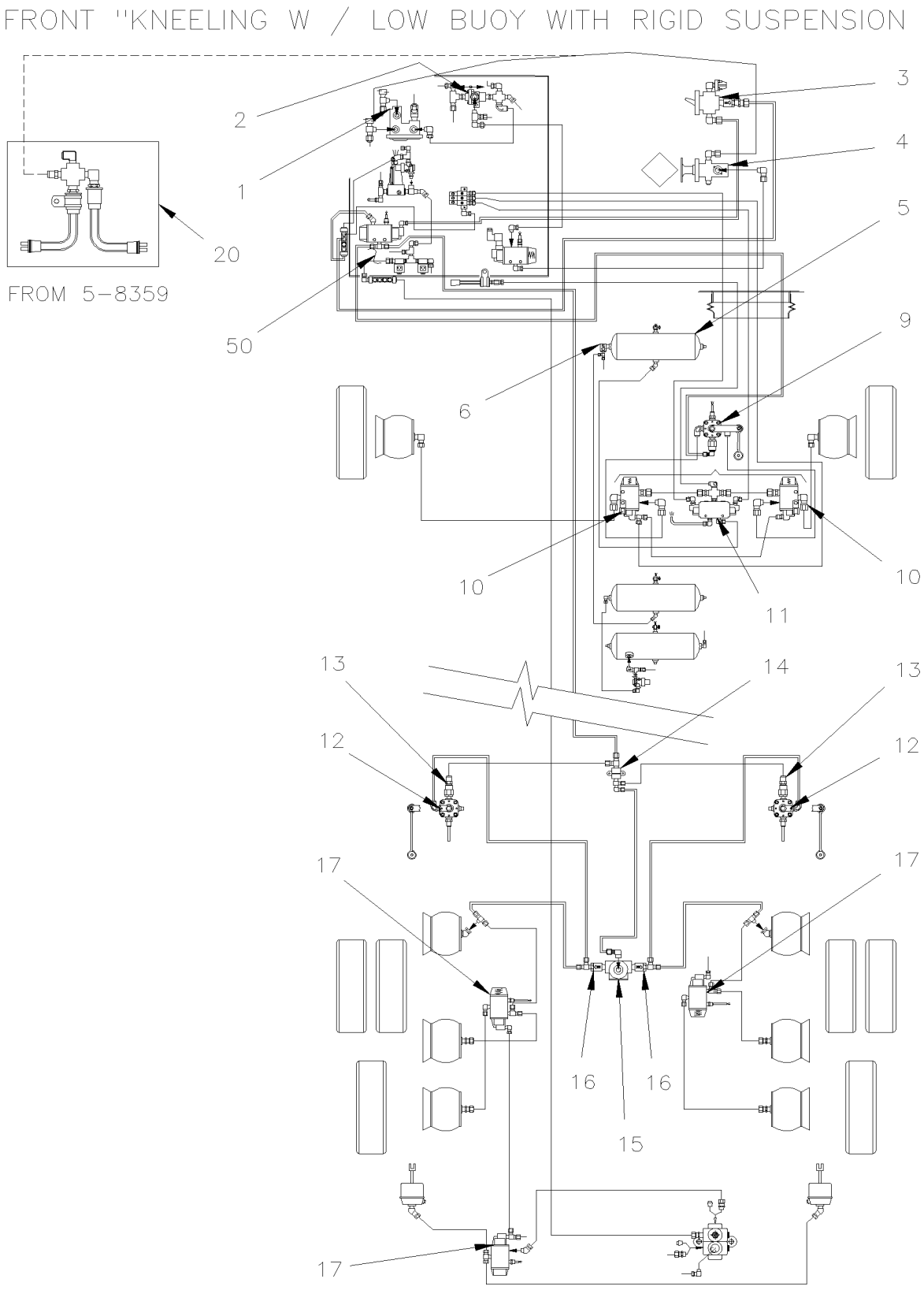

From Y-7046 To 6-8906		Date:07/2024	PAGE:Y2-1620-10
HIGH-BUOY, LOW BUOY & "KNEELING" VALVE			

FRONT "KNEELING" W / LOW BUOY & HIGH BUOY WITH RIGID SUSPENSION

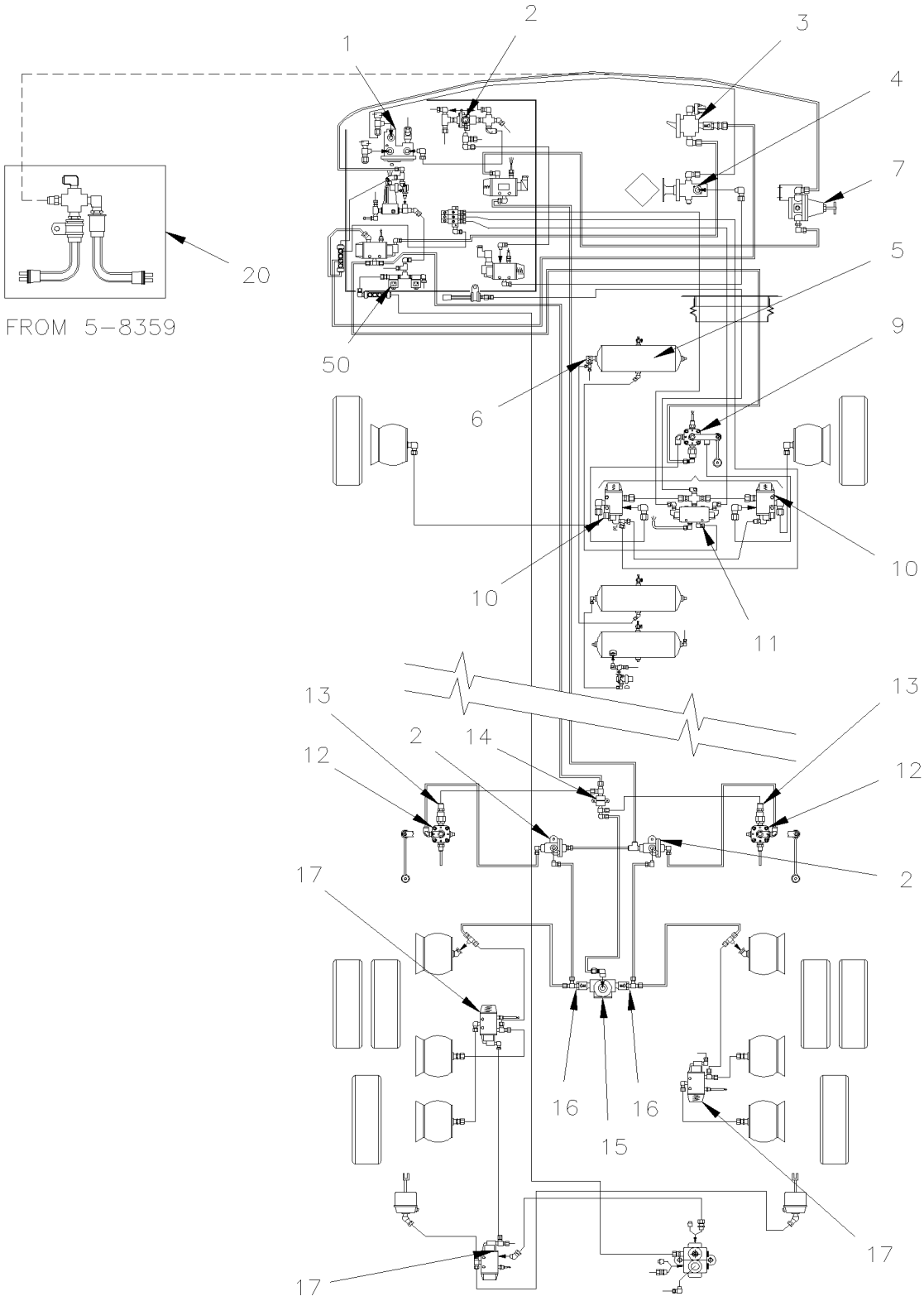

From Y-7046 To 6-8906		Date:07/2024	PAGE:Y2-1620-10
HIGH-BUOY, LOW BUOY & "KNEELING" VALVE			

FRONT ''KNEELING'' W / LOW BUOY & HIGH BUOY WITH INDEPENDANT SUSPENSION

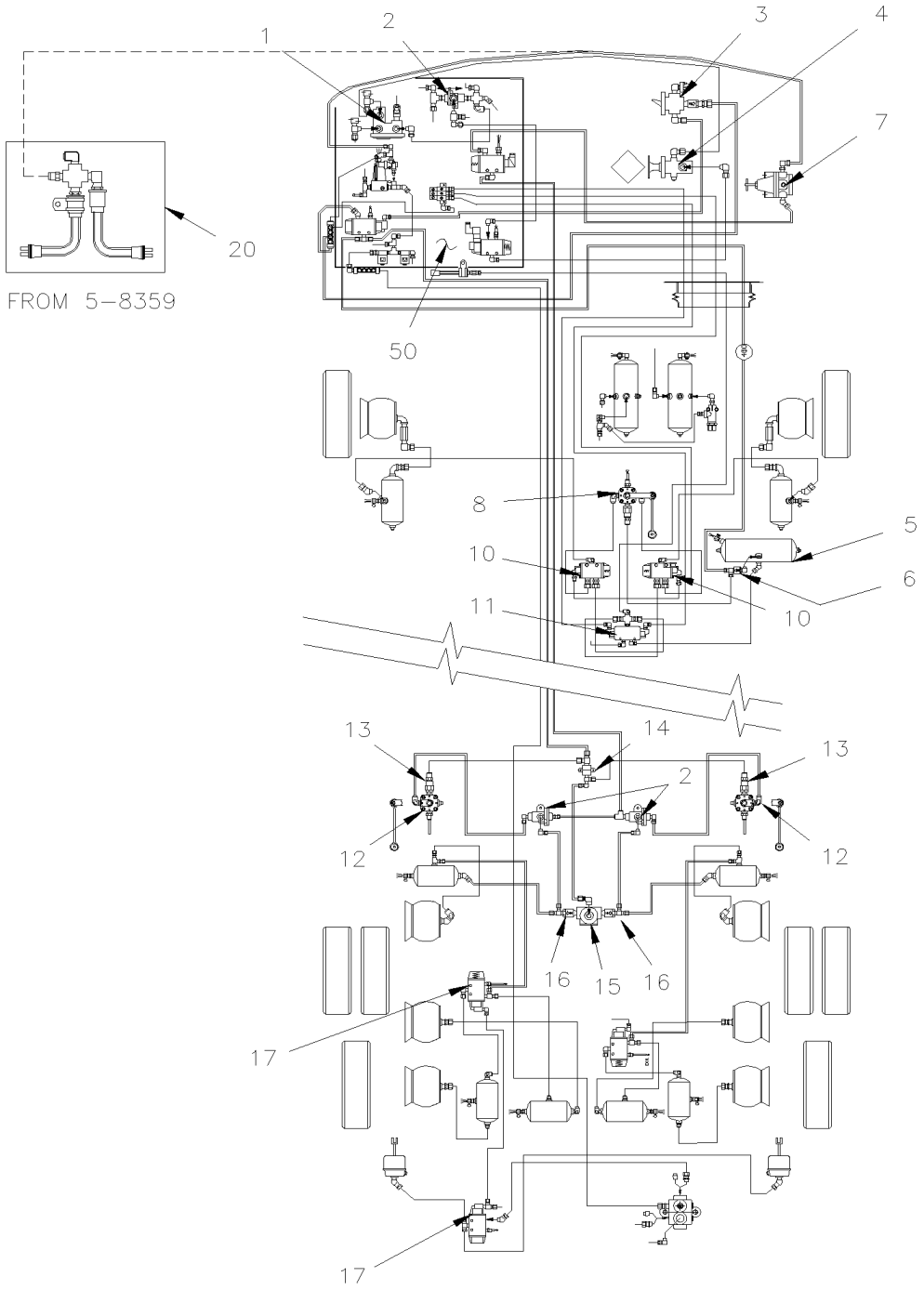

From Y-7046 To 6-8906		Date:07/2024	PAGE:Y2-1620-10
HIGH-BUOY, LOW BUOY & "KNEELING" VALVE			

FRONT "KNEELING" W / HIGH BUOY WITH RIGID SUSPENSION

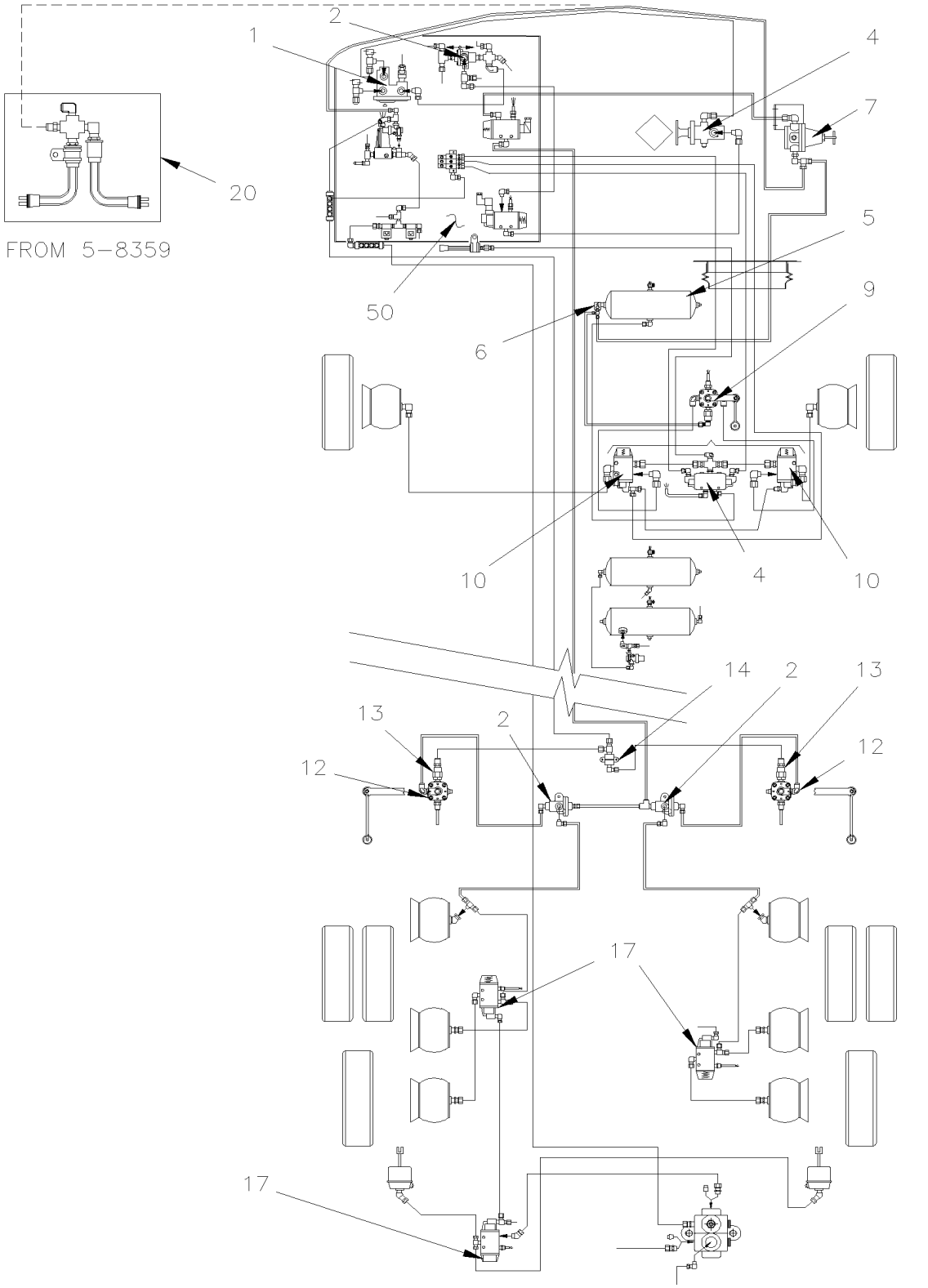

From Y-7046 To 6-8906		Date:07/2024	PAGE:Y2-1620-10
HIGH-BUOY, LOW BUOY & "KNEELING" VALVE			

FRONT "KNEELING" W/HIGH BUOY WITH INDEPENDENT SUSPENSION

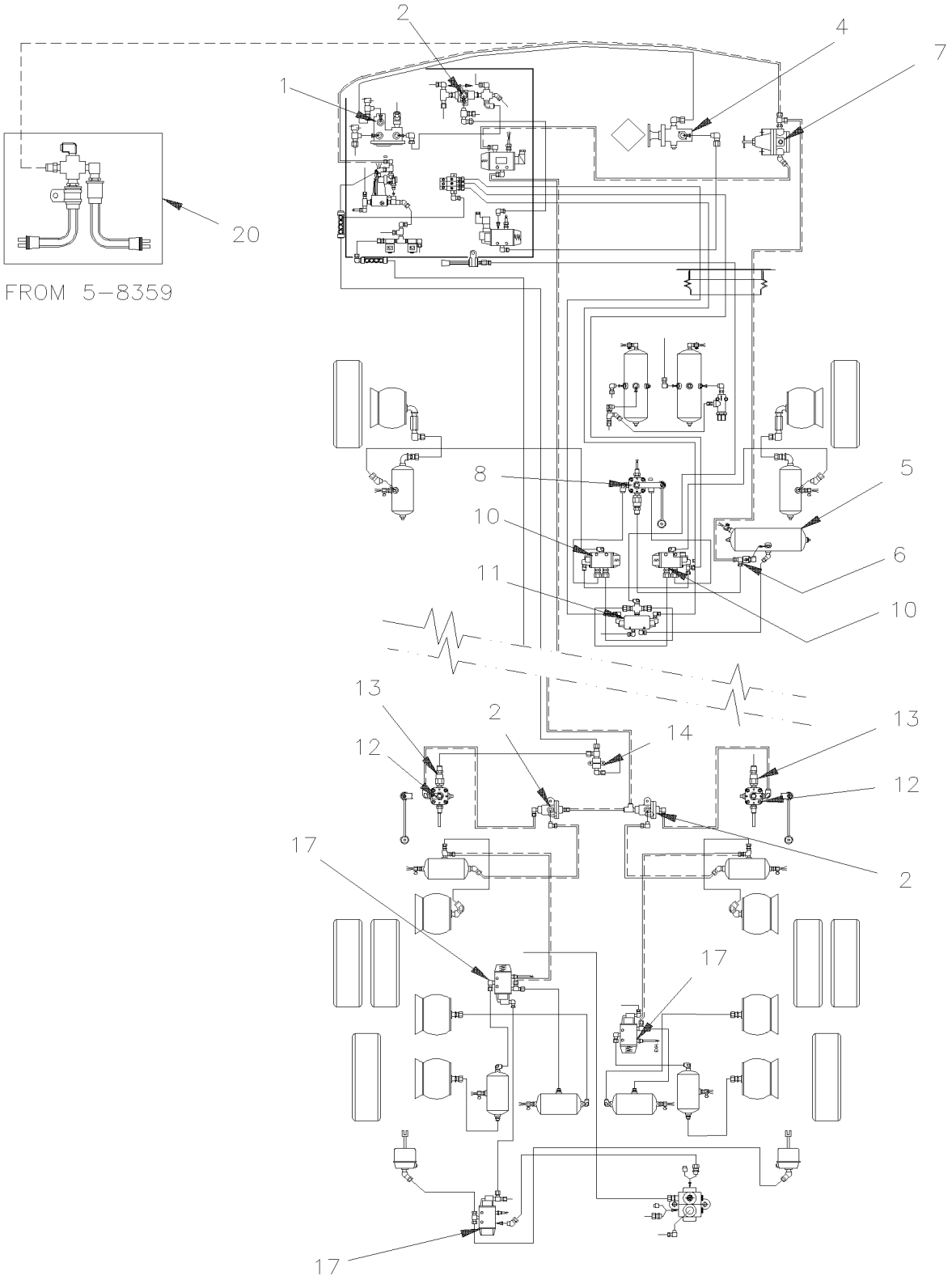

From Y-7046 To 6-8906		Date:07/2024	PAGE:Y2-1620-10
HIGH-BUOY, LOW BUOY & "KNEELING" VALVE			

FRONT "KNEELING" W/LOW BUOY WITH INDEPENDENT SUSPENSION

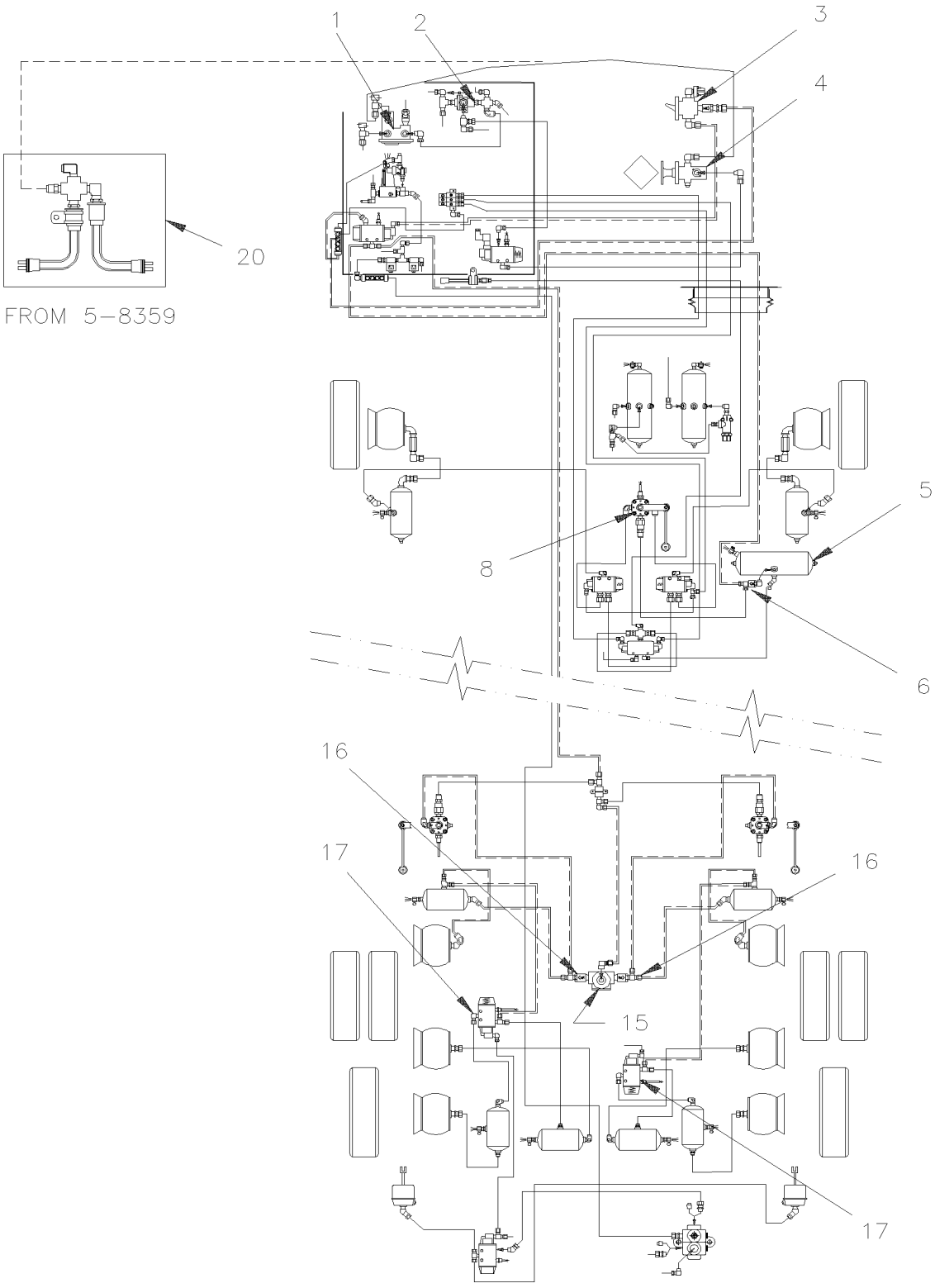

From Y-7046 To 6-8906		Date:07/2024	PAGE:Y2-1620-10

HIGH-BUOY, LOW BUOY & "KNEELING" VALVE

Item#	Part	Description	XLII 45	XLII MTH40	XLII MTH45	XLII MTH45E	NOTES
1	640870	VALVE / SPRING BRAKE SR-1 To 5-8358	1				
. NS	640921	. REPAIR KIT / SR-1 To 5-8358	1				
2	641015	VALVE, DOUBLE CHECK DC-4 To 3-8008	AR				
2	641564	VALVE, DOUBLE CHECK DC-4 From 3-8009	AR				
3	640136	VALVE, CONTROL TW-1	1				
. NS	641156	. REPAIR KIT / TW-1	1				
4	641128	VALVE, CONTROL VALVE PP-1 / 40PSI	1				
. NS	641154	. REPAIR KIT / PP-1 & RD-3	1				
5	641411	AIR TANK / 2370 IN° / 12" O.D. X 24"	1				R
5	140868	AIR TANK / W/END LOWER DRAIN 1228 IN° / 8" O.D. X 26" To Y-7235	1				I
5	641583	AIR TANK / 1508 IN° / 9" 1/2 O.D. X 24"	1				I
5	**Y2-1203-00**	**AIR TANK - INSTALLATION To 2-7799**					
5	**Y2-1203-01**	**AIR TANK - INSTALLATION From 2-7800**					
6	641172	VALVE, CHECK ELBOW 90º 1/2 NPT	1				
7	641352	AIR PRESSURE REGULATOR 1/2" NPT	1				A
7	142025	SUPPORT / AIR REGULATOR	1				A
8	630157	VALVE, HEIGHT CONTROL "BARKSDALE" / FRONT To 1-7417	1				I
8	630237	VALVE, HEIGHT CONTROL "BARKSDALE" / FRONT From 1-7418	1				I
9	630156	VALVE, HEIGHT CONTROL "BARKSDALE"	1				R
10	641274	VALVE, 3 WAYS, 2 POSITIONS N.C.	2				
11	641531	VALVE, 5 WAYS, 3 POSITIONS	1				
. NS	641186	. SPOOL	1				
12	630156	VALVE, HEIGHT CONTROL "BARKSDALE"	2				
13	640135	VALVE, CHECK 1/4 NPT	2				
14	640643	ANCHOR ELBOW / PIPE FITTING / 1/4NPT-Fx1/4NPT-F STL	1				
15	641429	VALVE, QUICK RELEASE QR-1 / 3/8NPTx3/8NPTx3/8NPT	1				
. NS	640924	. REPAIR KIT / QR-1	1				
16	640135	VALVE, CHECK 1/4 NPT	2				
17	641274	VALVE, 3 WAYS, 2 POSITIONS N.C.	2				
20	287234	PRESSURE SWITCH N.C. 30-10 20PS001AB030E010E From 5-8359	2				
50	**Y2-1630-00**	**FRONT KNEELING - CONTROL PANEL To 2-7799**					
50	**Y2-1630-01**	**FRONT KNEELING - CONTROL PANEL From 2-7800 To 5-8558**					
50	**Y2-1630-02**	**FRONT KNEELING - CONTROL PANEL From 5-8559**					
		A) INSTALLED IN SPARE COMPARTMENT					
		I) WITH INDEPENDANT SUSPENSION					
		R) WITH I BEAM RIGID SUSPENSION					

From Y-7046 To 8-9339		Date:07/2024	PAGE:Y2-1620-50
HEIGHT CONTROL VALVE - MTH			

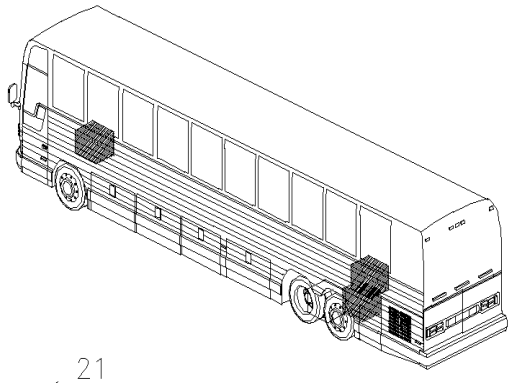

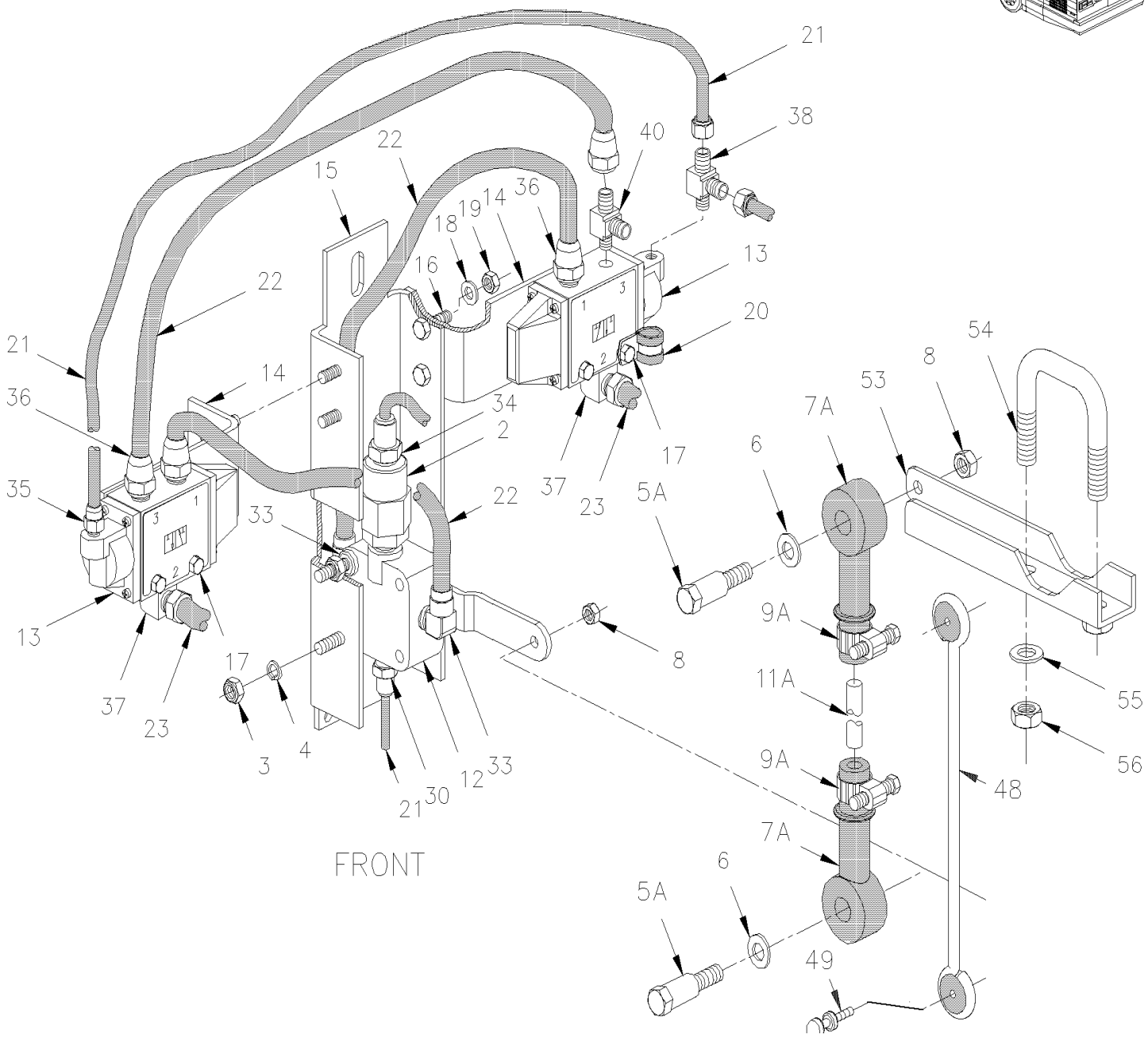

From Y-7046 To 8-9339		Date:07/2024	PAGE:Y2-1620-50
HEIGHT CONTROL VALVE - MTH			

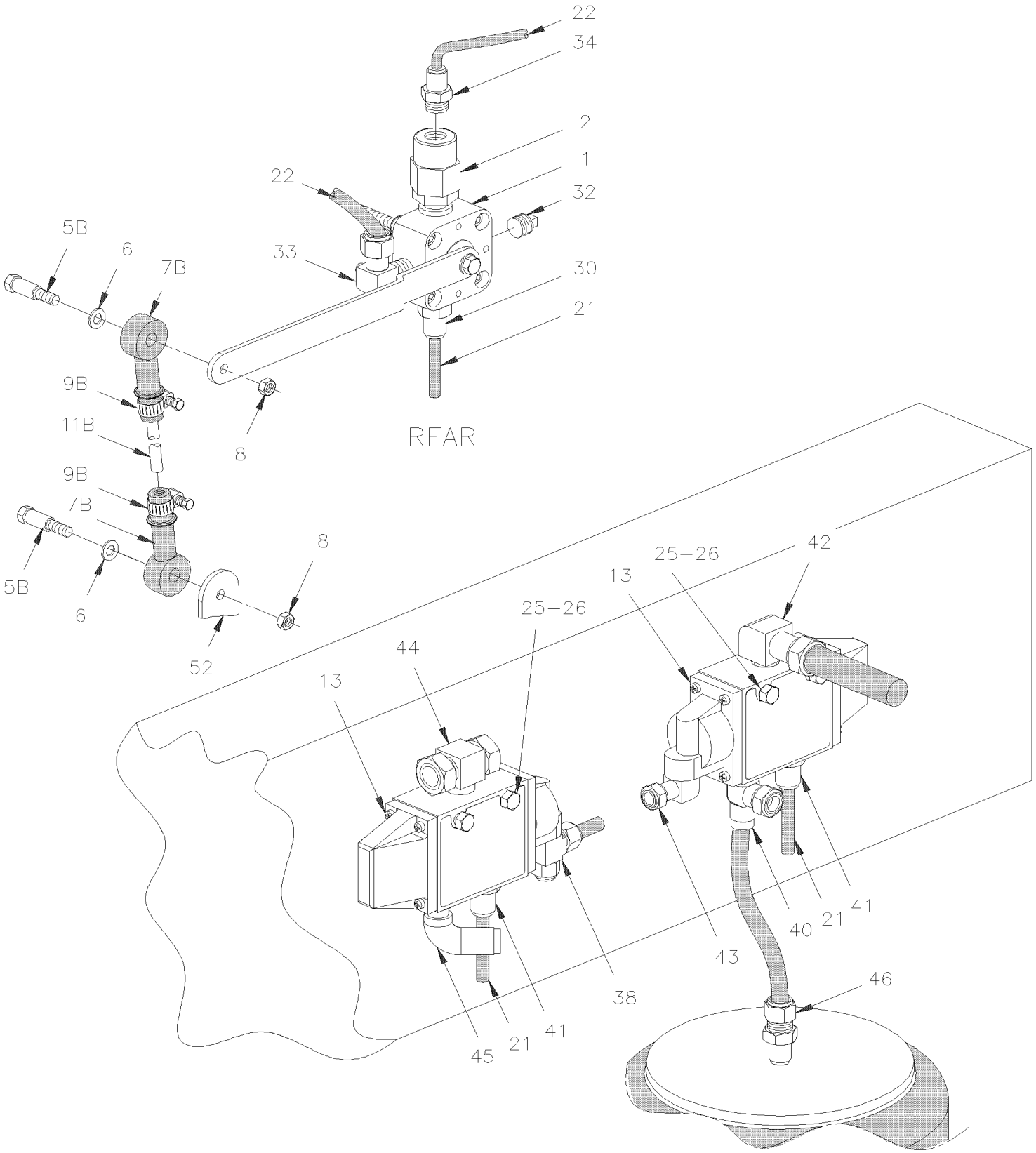

From Y-7046 To 8-9339		Date:07/2024	PAGE:Y2-1620-50

HEIGHT CONTROL VALVE - MTH

Item#	Part	Description	XLII 45	XLII MTH40	XLII MTH45	XLII MTH45E	NOTES
1	630156	VALVE, HEIGHT CONTROL "BARKSDALE"		2	2	2	
2	640135	VALVE, CHECK 1/4 NPT		1	1	1	
3	500769	NUT HEX 1/4-20 Z050		2	2	2	
4	500473	WASHER LO SPT .262x.489x.062 Z050		2	2	2	
5A	630137	SCREW SHR CAP HEX 5/16" I.D. x 1/4-20 To 1-7417		2	2	2	
5A	630137	SCREW SHR CAP HEX 5/16" I.D. x 1/4-20 To 1-7417		2	2	2	
5B	630137	SCREW SHR CAP HEX 5/16" I.D. x 1/4-20		2	2	2	
5B	630137	SCREW SHR CAP HEX 5/16" I.D. x 1/4-20		2	2	2	
6	500441	WASHER FL .312x.734x.065 Z050		2	2	2	
7A	630117	ROD END / BLACK RUBBER 5/16" I.D. To 1-7417		2	2	2	
7A	630117	ROD END / BLACK RUBBER 5/16" I.D. To 1-7417		2	2	2	
7B	630117	ROD END / BLACK RUBBER 5/16" I.D.		2	2	2	
7B	630117	ROD END / BLACK RUBBER 5/16" I.D.		2	2	2	
8	502716	NUT HEX NYRT 1/4-20		2	2	2	
9A	504014	HOSE CLAMP / 1/4"-5/8" SS / HM-4 To 1-7417		2	2	2	
9A	504014	HOSE CLAMP / 1/4"-5/8" SS / HM-4 To 1-7417		2	2	2	
9B	504014	HOSE CLAMP / 1/4"-5/8" SS / HM-4		2	2	2	
9B	504014	HOSE CLAMP / 1/4"-5/8" SS / HM-4		2	2	2	
11A	131351	ROD LINK / 140MM To 1-7417		1	1	1	
11A	131351	ROD LINK / 140MM To 1-7417		1	1	1	
11B	131351	ROD LINK / 140MM		2	2	2	
11B	131351	ROD LINK / 140MM		2	2	2	
12	630157	VALVE, HEIGHT CONTROL "BARKSDALE" / FRONT To 1-7417		1	1	1	
12	630237	VALVE, HEIGHT CONTROL "BARKSDALE" / FRONT From 1-7418		1	1	1	
13	641274	VALVE, 3 WAYS, 2 POSITIONS N.C.		3	3	3	
14	131319	SUPPORT VALVE		2	2	2	
15	131468	SUPPORT HEIGHT CONTROL VALVE To 1-7417		1	1	1	
15	131621	SUPPORT HEIGHT CONTROL VALVE / WHITOUT "KNEELING" From 1-7418		1	1	1	
16	502622	SCREW CAP HEX M6-1.0x20 SS BK		4	4	4	
17	502656	SCREW CAP HEX M6-1.0x50 SS		4	4	4	
18	502570	WASHER LO SPT 6.1x11.8x1.6 SS		8	8	8	
19	502565	NUT HEX M6-1.0 SS		8	8	8	
20	560480	CLAMP / 1/2" I.D.		1	1	1	
21	503402	TUBE, NYLON 1/4 O.D. / BLACK S.L.		AR	AR	AR	
22	503471	TUBE, NYLON 3/8 O.D. / BLUE S.L.		AR	AR	AR	
23	503517	TUBE, NYLON 1/2 O.D. / BLUE S.L.		AR	AR	AR	
25	500625	SCREW TC CAP HEXW 1/4-20x2 Z050		4	4	4	
26	500440	WASHER FL .250x.562x.065 Z050		4	4	4	
30	641332	MALE CONNECTOR / PUSH-IN FITTING / #4x1/4NPT-M BR		1	1	1	
31	641336	FEMALE ELBOW 90º / NTA FITTING / #6x3/8NPT-F BR		1	1	1	
32	501800	PLUG HEXS / PIPE FITTING / 1/4NPT-M STL		1	1	1	
NS	501304	PLUG SQUARE HEAD / PIPE FITTING / 1/4NPT-M BR		1	1	1	

From Y-7046 To 8-9339		Date:07/2024	PAGE:Y2-1620-50

HEIGHT CONTROL VALVE - MTH

Item#	Part	Description	XLII 45	XLII MTH40	XLII MTH45	XLII MTH45E	NOTES
33	641372	MALE ELBOW 90° NON-SWIVEL / PUSH-IN FITTING / #6x1/4NPT-M BR		1	1	1	
34	641331	MALE CONNECTOR / PUSH-IN FITTING / #6x1/4NPT-M BR		1	1	1	
35	641242	MALE CONNECTOR / PUSH-IN FITTING / #4x1/8NPT-M BR		1	1	1	
36	641313	PLUG CAP / ADJUSTING DEVICE / PLASTIC INTERIOR GRIP		3	3	3	
37	641040	MALE ELBOW 90º / NTA FITTING / #8x3/8NPT-M BR		2	2	2	
38	641002	MALE RUN TEE / NTA FITTING / #4x#4x1/8NPT-M BR		1	1	1	
39	641373	MALE ELBOW 90° NON-SWIVEL / PUSH-IN FITTING / #8x1/4NPT-M BR		2	2	2	
40	641388	MALE RUN TEE NON-SWIVEL / PUSH-IN FITTING / #6x#6x3/8NPT-M BR		1	1	1	
41	641347	MALE CONNECTOR / PUSH-IN FITTING / #4x3/8NPT-M BR		1	1	1	
42	641375	MALE ELBOW 90° NON-SWIVEL / PUSH-IN FITTING / #6x3/8NPT-M BR		1	1	1	
43	641369	MALE ELBOW 90° NON-SWIVEL / PUSH-IN FITTING / #4x1/8NPT-M BR		1	1	1	
44	641008	MALE BRANCH TEE / NTA FITTING / #6x#6x3/8NPT-M BR		1	1	1	
45	641367	MALE ELBOW 45° NON-SWIVEL / PUSH-IN FITTING / #6x3/8NPT-M BR		1	1	1	
46	641384	MALE CONNECTOR / PUSH-IN FITTING / #10x1/2NPT-M BR		1	1	1	
48	630231	LINK ASSY 185MM C/C 7 1/4" From 1-7418		1	1	1	
. A	N8889244	. GROMMET / LINK From 1-7418		2	2	2	
. B	630250	. STUD RETAINER 1/4-20 X 1" From 1-7418		2	2	2	
. C	500247	. NUT HEX 1/4-20 N500 From 1-7418		4	4	4	
. D	500473	. WASHER LO SPT .262x.489x.062 Z050 From 1-7418		4	4	4	
49	N.S.S.	STUD RETAINER From 1-7418		2	2	2	1
52	121561	ACTUATOR SUPPORT / TO FIX LINK / (WELDED)		2	2	2	
NS	110594	PLATE, RETAINER		1	1	1	B
53	110679	ACTUATOR LEVER		1	1	1	C
54	504635	U-BOLT 1 3/4" I.D. x 2 3/4" x 5/16-18		1	1	1	
55	500476	WASHER LO SPT .317x.586x.078 Z050		2	2	2	
56	500778	NUT HEX 5/16-18 N500		2	2	2	
		B) TO FIX AXLE HOUSING					
		C) FIXED AT FRONT STABILISATOR BAR					
		1) NOT SOLD SEPARATELY					

From Y-7046 To 2-7799		Date:07/2024	PAGE:Y2-1630-00
FRONT KNEELING - CONTROL PANEL			

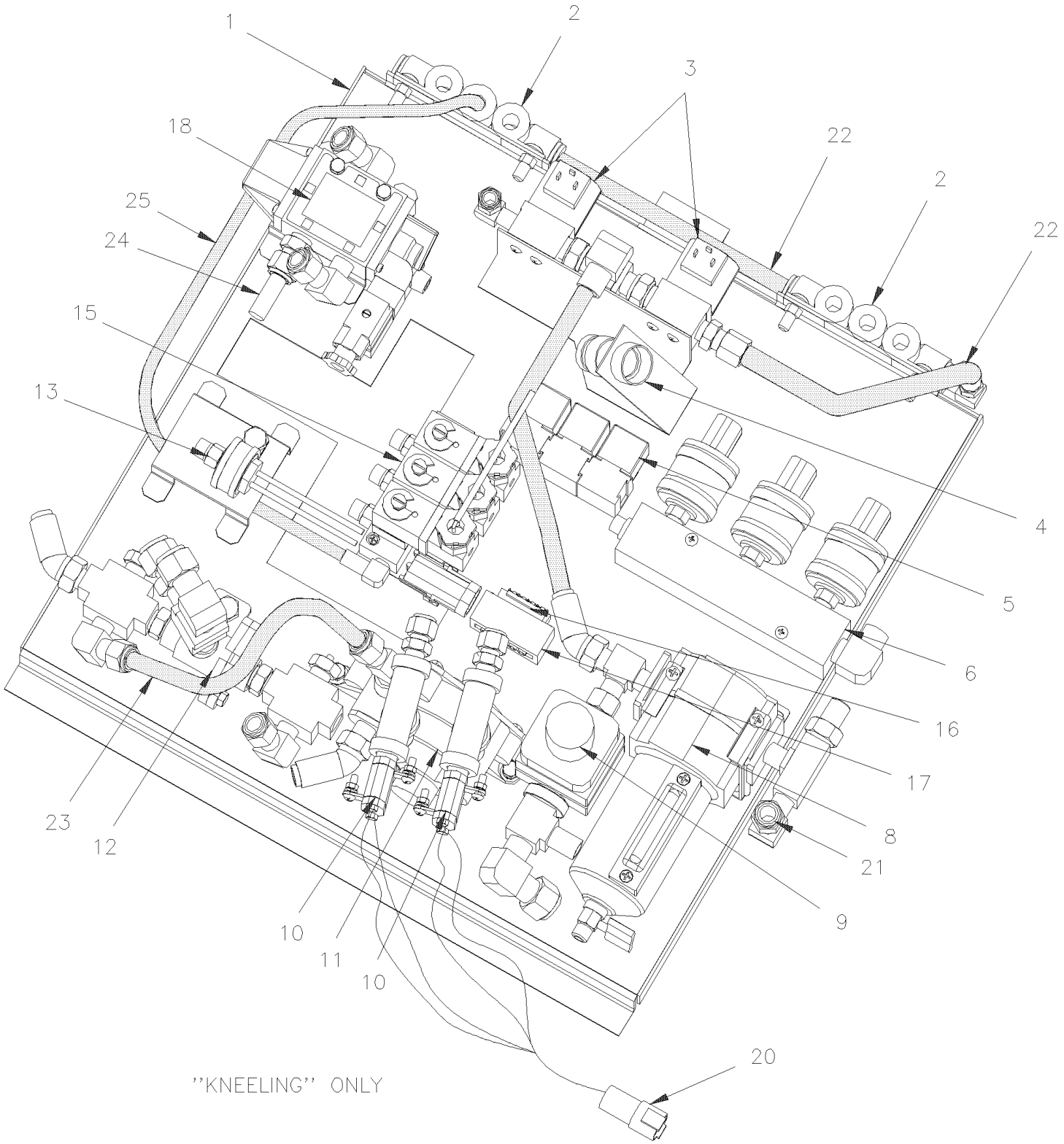

From Y-7046 To 2-7799		Date:07/2024	PAGE:Y2-1630-00
FRONT KNEELING - CONTROL PANEL			

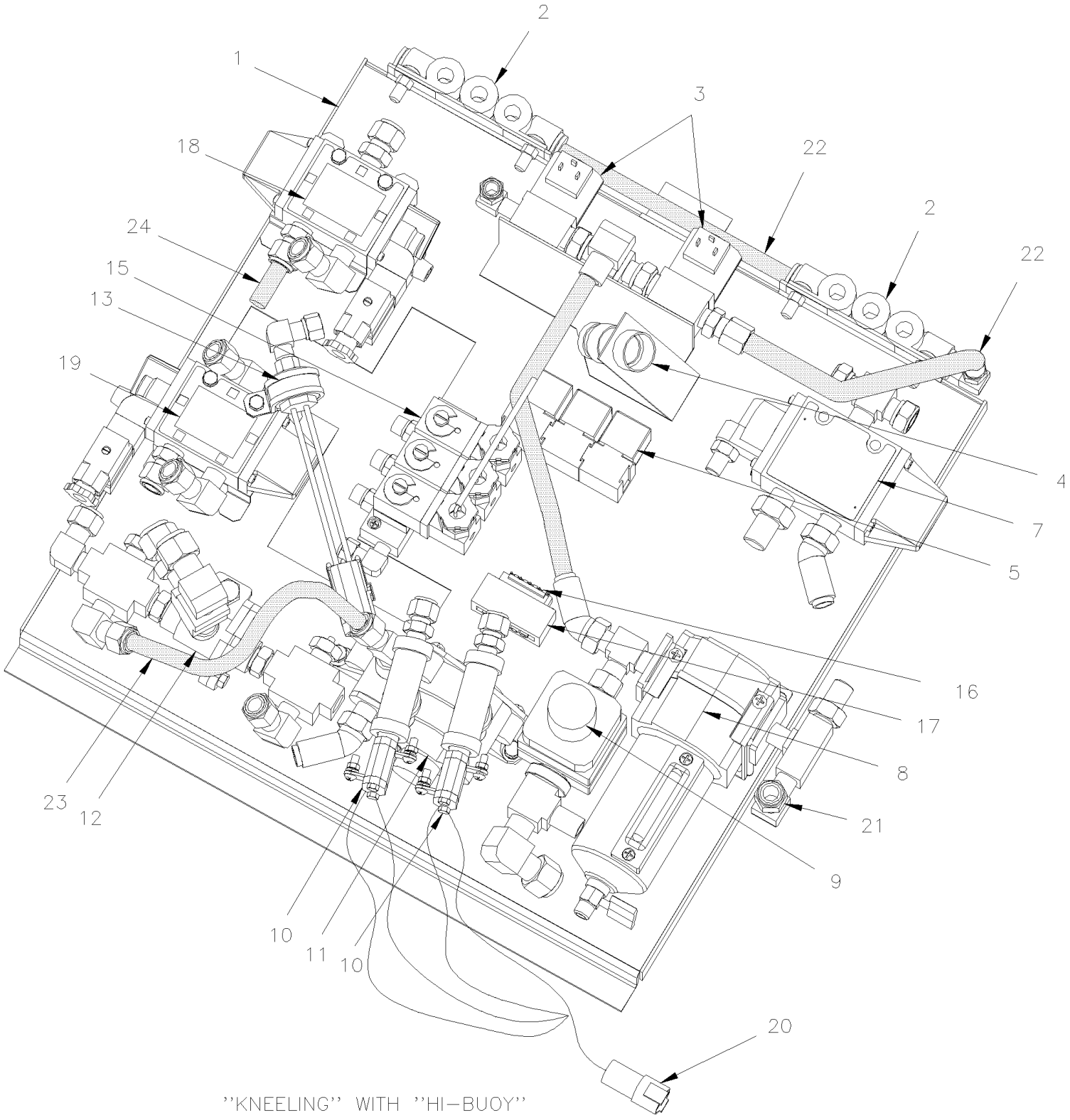

From Y-7046 To 2-7799		Date:07/2024	PAGE:Y2-1630-00

FRONT KNEELING - CONTROL PANEL

Item#	Part	Description	XLII 45	XLII MTH40	XLII MTH45	XLII MTH45E	NOTES
1	142092	VALVES SUPPORT ASSY	1				
2	641508	MANIFOLD / PUSH-IN FITTING / 2x#6 / 4x#4 PLAS To Y-7085	2				
2	641897	MANIFOLD / PUSH-IN FITTING / 2x#6 / 4x#4 PLAS From Y-7086	1				
3	562804	VALVE, 2 WAYS N.C.	2				
. NS	562848	. CONNECTOR / SOCKET HOUSING ASSY 3C / PNEUMAC 54933-05	1				
4	065117	CABLE ASSY / "KNEELING PANEL" To Y-7310	1				
4	065349	CABLE ASSY / "KNEELING PANEL" From Y-7311	1				
5	561707	RELAY 24V S.P.D.T. W/RESISTOR / To 5-8577	3				
5	563332	RELAY 24V S.P.D.T. W/RESISTOR / "VOLVO" (20374662) From 5-8578	3				
6	**Y2-0750-00**	**AUTOMATIC TRANSMISSION - "WORLD" WITH DETROIT S-60**					
7	641274	VALVE, 3 WAYS, 2 POSITIONS N.C.	1				
8	**Y2-1220-15**	**AIR FILTER - ACCESSORIES**					
9	641137	VALVE, PRESSURE PROTECTION TYPE PR-4 70PSI	1				
10	641174	PRESSURE SWITCH N.C. 30PSI / ¼NPT LP-2 To 3-7957	2				
10	287234	PRESSURE SWITCH N.C. 30-10 20PS001AB030E010E From 3-7958	2				
11	640870	VALVE / SPRING BRAKE SR-1	1				
. NS	640921	. REPAIR KIT / SR-1	1				
11	140227	DECAL / ACC AIR FILTER DRAIN / ENGLISH & FRANCAIS	1				
11	142368	DECAL / ACC AIR FILTER DRAIN / ENGLISH & SPANISH	1				
12	641015	VALVE, DOUBLE CHECK DC-4	1				
13	452082	PRESSURE SWITCH N.O. 30-15 20SP001AA030C015C	1				
14	952633	CLAMP / 7/8" I.D.	1				
15	641180	MANIFOLD VALVE / W/3 SOLENOID	1				
. NS	641928	. KIT, MANIFOLD REPAIR / N.C.	3				
. NS	641107	. COIL 24V	1				
NS	641242	MALE CONNECTOR / PUSH-IN FITTING / #4x1/8NPT-M BR	3				
16	381145	DIODE ASSY / W/5 3AMPS	1				
17	381518	SUPPORT / FOR 10 PINS CONNECTOR	1				
18	641528	VALVE, 3 WAYS, 2 POSITIONS N.O.	1				
. NS	641929	. COIL 24V	1				
. NS	641169	. SPOOL	1				
. NS	641385	. CONNECTOR / SOCKET HOUSING ASSY 3C / PNEUMAC 54934-01	1				
19	641529	VALVE, 3 WAYS, 2 POSITIONS N.C. To 1-7535	1				
. NS	641929	. COIL 24V To 1-7535	1				
. NS	641169	. SPOOL To 1-7535	1				
. NS	641385	. CONNECTOR / SOCKET HOUSING ASSY 3C / PNEUMAC 54934-01 To 1-7535	1				
19	641937	VALVE, 3 WAYS, 2 POSITIONS N.C. / W/MAN OVERRIDE From 1-7535	1				
. NS	641929	. COIL 24V From 1-7535	1				
. NS	641385	. CONNECTOR / SOCKET HOUSING ASSY 3C / PNEUMAC 54934-01 From 1-7535	1				
NS	641934	SILENCER / MUFFLER / 3/8NPT-M	1				
20	065222	CABLE ASSY / PARKING BRAKE PRESSURE	1				
NS	065479	CABLE ASSY / SAFETY SWITCH / PARKING BRAKE (BETWEN SWITCH & RELAY)	1				A

From Y-7046 To 2-7799		Date:07/2024	PAGE:Y2-1630-00

FRONT KNEELING - CONTROL PANEL

Item#	Part	Description	XLII 45	XLII MTH40	XLII MTH45	XLII MTH45E	NOTES
21	640488	VALVE, AIR FILL 1/8" NPT	1				
. NS	650164	. CAP VALVE / CHROME	1				
22	503404	TUBE, NYLON 3/8 O.D. / BLACK S.L.	AR				
23	503463	TUBE, NYLON 3/8 O.D. / GREEN S.L.	AR				
24	503470	TUBE, NYLON 3/8 O.D. / YELLOW S.L.	AR				
25	503402	TUBE, NYLON 1/4 O.D. / BLACK S.L.	AR				
		A) WITH "OPTION" SAFETY PARKING BRAKE SWITCH ON DASHBOARD					

From 2-7800 To 5-8558		Date:07/2024	PAGE:Y2-1630-01
FRONT KNEELING - CONTROL PANEL			

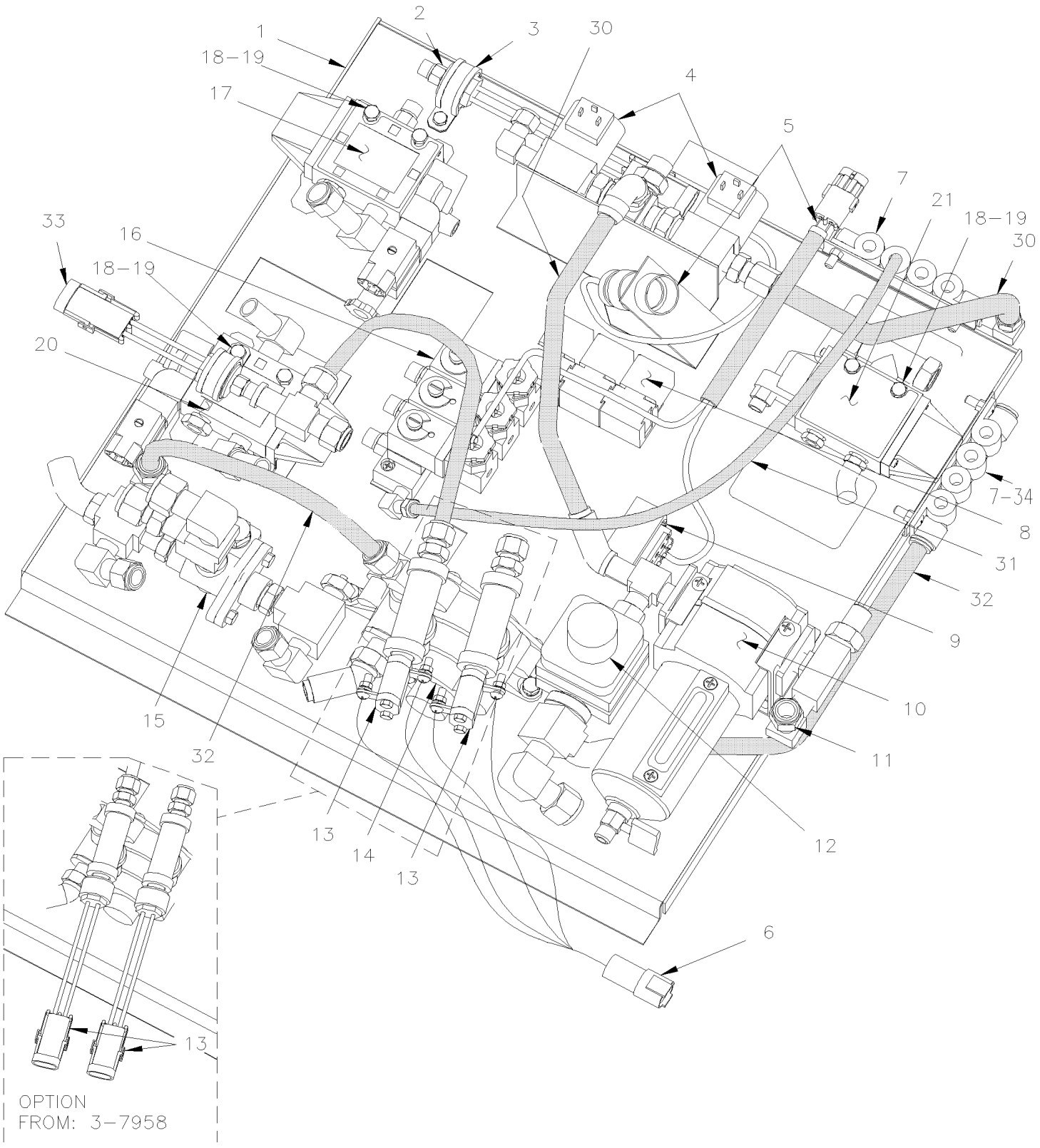

From 2-7800 To 5-8558		Date:07/2024	PAGE:Y2-1630-01

FRONT KNEELING - CONTROL PANEL

Item#	Part	Description	XLII 45	XLII MTH40	XLII MTH45	XLII MTH45E	NOTES
1	142215	VALVE SUPPORT ASSY	1				
1	142366	VALVE SUPPORT ASSY	1				
2	452082	PRESSURE SWITCH N.O. 30-15 20SP001AA030C015C	1				
3	952633	CLAMP / 7/8" I.D.	1				
4	562804	VALVE, 2 WAYS N.C.	2				
. NS	562848	. CONNECTOR / SOCKET HOUSING ASSY 3C / PNEUMAC 54933-05	1				
5	065349	CABLE ASSY / "KNEELING PANEL" To 4-8358	1				
5	066092	CABLE ASSY / "KNEELING PANEL" From 5-8359 To 5-8469	1				
5	066225	CABLE ASSY / "KNEELING PANEL" From 5-8470	1				
6	065222	CABLE ASSY / PARKING BRAKE PRESSURE	1				
NS	065479	CABLE ASSY / SAFETY SWITCH / PARKING BRAKE (BETWEN SWITCH & RELAY) To 4-8180	1				A
NS	065950	CABLE ASSY / SAFETY SWITCH / PARKING BRAKE (BETWEN SWITCH & RELAY) From 4-8181	1				A
7	641897	MANIFOLD / PUSH-IN FITTING / 2x#6 / 4x#4 PLAS	2				
NS	500574	SCREW MA TR PH #10-24x1 1/4 SS	4				
8	561706	RELAY 12V S.P.D.T. W/DIODE /	3				
9	381145	DIODE ASSY / W/5 3AMPS	1				
NS	381518	SUPPORT / FOR 10 PINS CONNECTOR	1				
10	**Y2-1220-15**	**AIR FILTER - ACCESSORIES**					
11	640488	VALVE, AIR FILL 1/8" NPT	1				
. NS	650164	. CAP VALVE / CHROME	1				
12	641137	VALVE, PRESSURE PROTECTION TYPE PR-4 70PSI	1				
13	641174	PRESSURE SWITCH N.C. 30PSI / ¼NPT LP-2 To 3-7957	2				
13	287234	PRESSURE SWITCH N.C. 30-10 20PS001AB030E010E From 3-7958 To 5-8358	2				
14	640870	VALVE / SPRING BRAKE SR-1	1				
. NS	640921	. REPAIR KIT / SR-1	1				
15	641015	VALVE, DOUBLE CHECK DC-4 To 3-8008	1				
15	641564	VALVE, DOUBLE CHECK DC-4 From 3-8009	1				
16	641180	MANIFOLD VALVE / W/3 SOLENOID	1				
. NS	641928	. KIT, MANIFOLD REPAIR / N.C.	3				
. NS	641107	. COIL 24V	1				
NS	641242	MALE CONNECTOR / PUSH-IN FITTING / #4x1/8NPT-M BR	3				
17	641528	VALVE, 3 WAYS, 2 POSITIONS N.O.	1				
. NS	641929	. COIL 24V	1				
. NS	641169	. SPOOL	1				
. NS	641385	. CONNECTOR / SOCKET HOUSING ASSY 3C / PNEUMAC 54934-01	1				
18	500994	SCREW CAP HEX 1/4-20x1 3/4 G5 PT Z050	2				
19	500473	WASHER LO SPT .262x.489x.062 Z050	AR				
20	641937	VALVE, 3 WAYS, 2 POSITIONS N.C. / W/MAN OVERRIDE	AR				
. NS	641929	. COIL 24V	1				
. NS	641385	. CONNECTOR / SOCKET HOUSING ASSY 3C / PNEUMAC 54934-01	1				
21	641274	VALVE, 3 WAYS, 2 POSITIONS N.C.	1				
30	503404	TUBE, NYLON 3/8 O.D. / BLACK S.L.	AR				

From 2-7800 To 5-8558		Date:07/2024	PAGE:Y2-1630-01

FRONT KNEELING - CONTROL PANEL

Item#	Part	Description	XLII 45	XLII MTH40	XLII MTH45	XLII MTH45E	NOTES
31	503402	TUBE, NYLON 1/4 O.D. / BLACK S.L.	AR				
32	503463	TUBE, NYLON 3/8 O.D. / GREEN S.L.	AR				
33	452082	PRESSURE SWITCH N.O. 30-15 20SP001AA030C015C	1				
34	641416	PLUG STEM / PUSH-IN FITTING / #4 PLAS	2				
		A) WITH "OPTION" SAFETY PARKING BRAKE SWITCH ON DASHBOARD					

From 5-8559 To 6-8906		Date:07/2024	PAGE:Y2-1630-02
FRONT KNEELING - CONTROL PANEL			

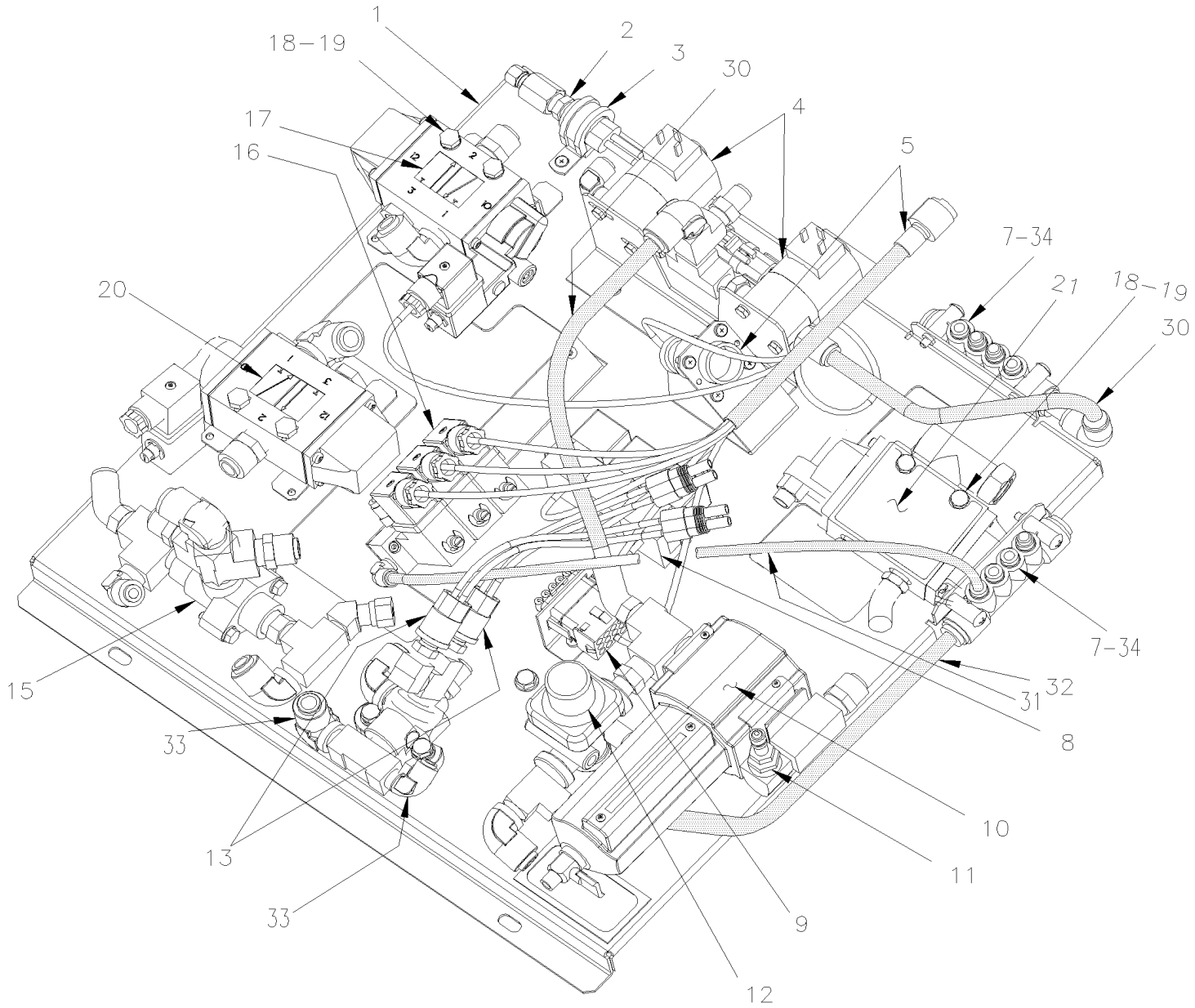

From 5-8559 To 6-8906		Date:07/2024	PAGE:Y2-1630-02

FRONT KNEELING - CONTROL PANEL

Item#	Part	Description	XLII 45	XLII MTH40	XLII MTH45	XLII MTH45E	NOTES
1	142366	VALVE SUPPORT ASSY	1				
2	452082	PRESSURE SWITCH N.O. 30-15 20SP001AA030C015C	1				
3	952633	CLAMP / 7/8" I.D.	1				
4	562804	VALVE, 2 WAYS N.C.	2				
. NS	562848	. CONNECTOR / SOCKET HOUSING ASSY 3C / PNEUMAC 54933-05	1				
5	066225	CABLE ASSY / "KNEELING PANEL"	1				
NS	065950	CABLE ASSY / SAFETY SWITCH / PARKING BRAKE (BETWEN SWITCH & RELAY)	1				A
7	641897	MANIFOLD / PUSH-IN FITTING / 2x#6 / 4x#4 PLAS	2				
NS	500574	SCREW MA TR PH #10-24x1 1/4 SS	4				
8	561706	RELAY 12V S.P.D.T. W/DIODE /	3				
9	381145	DIODE ASSY / W/5 3AMPS	1				
NS	381518	SUPPORT / FOR 10 PINS CONNECTOR	1				
10	**Y2-1220-15**	**AIR FILTER - ACCESSORIES**					
11	640488	VALVE, AIR FILL 1/8" NPT	1				
. NS	650164	. CAP VALVE / CHROME	1				
12	641137	VALVE, PRESSURE PROTECTION TYPE PR-4 70PSI	1				
13	287234	PRESSURE SWITCH N.C. 30-10 20PS001AB030E010E	2				
15	641564	VALVE, DOUBLE CHECK DC-4	1				
16	641180	MANIFOLD VALVE / W/3 SOLENOID	1				
. NS	641928	. KIT, MANIFOLD REPAIR / N.C.	3				
. NS	641107	. COIL 24V	1				
NS	641242	MALE CONNECTOR / PUSH-IN FITTING / #4x1/8NPT-M BR	3				
17	641528	VALVE, 3 WAYS, 2 POSITIONS N.O.	1				
. NS	641929	. COIL 24V	1				
. NS	641169	. SPOOL	1				
. NS	641385	. CONNECTOR / SOCKET HOUSING ASSY 3C / PNEUMAC 54934-01	1				
18	500994	SCREW CAP HEX 1/4-20x1 3/4 G5 PT Z050	2				
19	500473	WASHER LO SPT .262x.489x.062 Z050	AR				
20	641937	VALVE, 3 WAYS, 2 POSITIONS N.C. / W/MAN OVERRIDE	AR				
. NS	641929	. COIL 24V	1				
. NS	641385	. CONNECTOR / SOCKET HOUSING ASSY 3C / PNEUMAC 54934-01	1				
21	641274	VALVE, 3 WAYS, 2 POSITIONS N.C.	1				
30	503404	TUBE, NYLON 3/8 O.D. / BLACK S.L.	AR				
31	503402	TUBE, NYLON 1/4 O.D. / BLACK S.L.	AR				
32	503463	TUBE, NYLON 3/8 O.D. / GREEN S.L.	AR				
33	**Y2-1201-00**	**FITTING - MISCELLANEOUS**	1	1	1	1	
34	641416	PLUG STEM / PUSH-IN FITTING / #4 PLAS	2				
		A) WITH "OPTION" SAFETY PARKING BRAKE SWITCH ON DASHBOARD					

From Y-7046 To 2-7799		Date:07/2024	PAGE:Y2-1640-50
LEVEL-LOW - CONTROL PANEL & VALVES			

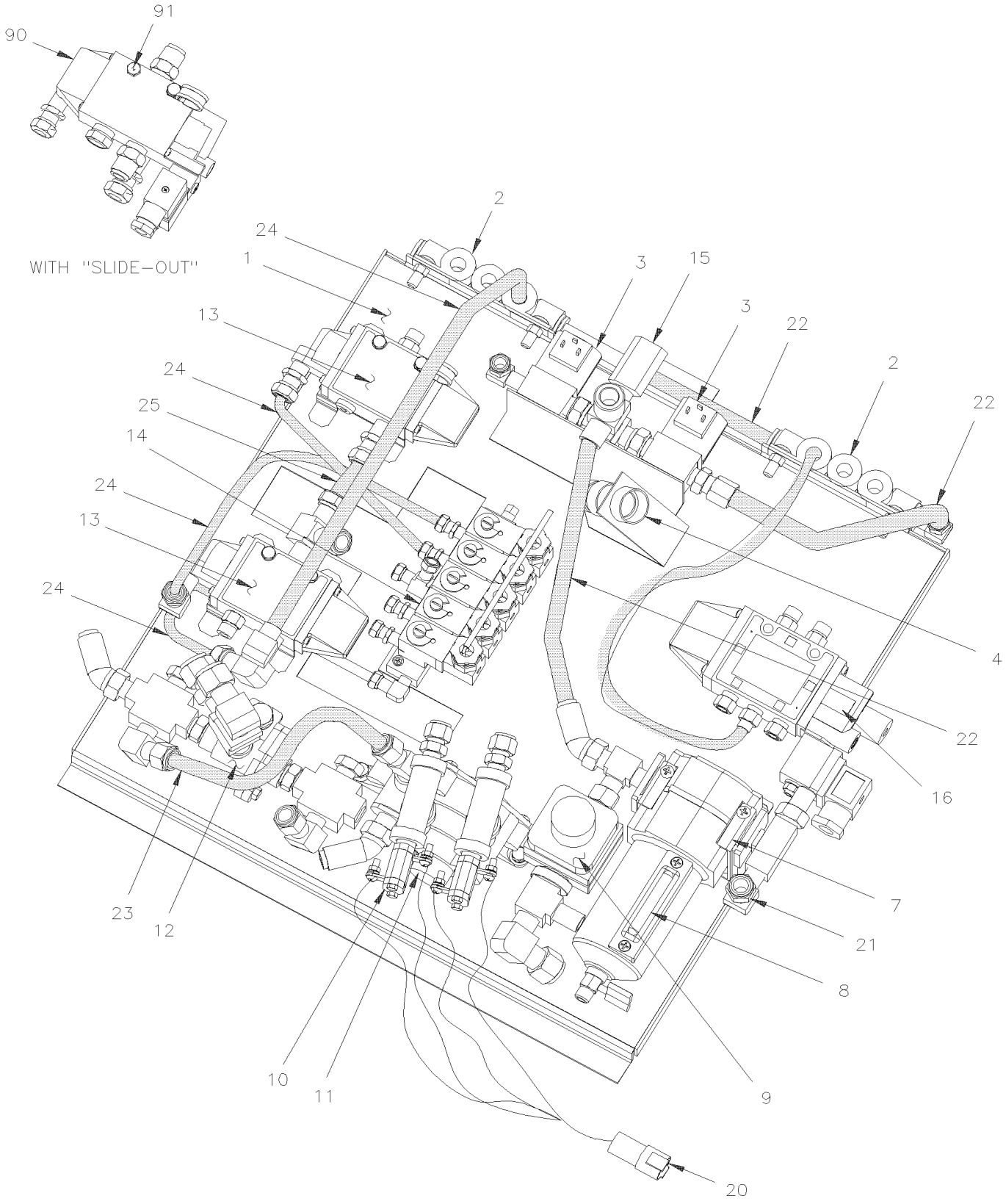

From Y-7046 To 2-7799		Date:07/2024	PAGE:Y2-1640-50

LEVEL-LOW - CONTROL PANEL & VALVES

Item#	Part	Description	XLII 45	XLII MTH40	XLII MTH45	XLII MTH45E	NOTES
1	142023	VALVE SUPPORT ASSY		1	1	1	
2	641508	MANIFOLD / PUSH-IN FITTING / 2x#6 / 4x#4 PLAS To Y-7085		2	2	2	
2	641897	MANIFOLD / PUSH-IN FITTING / 2x#6 / 4x#4 PLAS From Y-7086		2	2	2	
3	562804	VALVE, 2 WAYS N.C.		2	2	2	
. NS	562848	. CONNECTOR / SOCKET HOUSING ASSY 3C / PNEUMAC 54933-05		1	1	1	
NS	391812	IDENTIFICATION PLATE (CONVERTER)		1	1	1	
NS	142042	PLATE CONVERTER AIR HORN SOLENOID		1	1	1	
4	064177	CABLE ASSY / VALVE "LEVEL-LOW" To 1-7407		1	1	1	
4	065429	CABLE ASSY / VALVE "LEVEL-LOW" From 1-7408		1	1	1	
7	641339	SUPPORT / AIR FILTER		2	2	2	
8	**Y2-1220-15**	**AIR FILTER - ACCESSORIES**					
9	641137	VALVE, PRESSURE PROTECTION TYPE PR-4 70PSI		1	1	1	
10	641174	PRESSURE SWITCH N.C. 30PSI / ¼NPT LP-2 To 3-7957		1	1	1	
10	287234	PRESSURE SWITCH N.C. 30-10 20PS001AB030E010E From 3-7958		1	1	1	
11	640870	VALVE / SPRING BRAKE SR-1		1	1	1	
. NS	640921	. REPAIR KIT / SR-1		1	1	1	
12	641015	VALVE, DOUBLE CHECK DC-4		1	1	1	
13	641274	VALVE, 3 WAYS, 2 POSITIONS N.C.		2	2	2	
14	641205	MANIFOLD VALVE / W/5 SOLENOID		1	1	1	
. NS	641928	. KIT, MANIFOLD REPAIR / N.C.		5	5	5	
. NS	641107	. COIL 24V		5	5	5	
15	5011129	NEEDLE VALVE 1/4 NPT M x 1/4 NPT F		1	1	1	
15	501902	CROSS / PIPE FITTING / 1/4NPT-Fx1/4NPT-Fx 1/4NPT-Fx1/4NPT-F BR		1	1	1	
16	641527	VALVE, 4 WAYS, 2 POSITIONS		1	1	1	
. NS	641929	. COIL 24V		1	1	1	
. NS	641186	. SPOOL		1	1	1	
. NS	641385	. CONNECTOR / SOCKET HOUSING ASSY 3C / PNEUMAC 54934-01		1	1	1	
20	065222	CABLE ASSY / PARKING BRAKE PRESSURE		1	1	1	
21	640488	VALVE, AIR FILL 1/8" NPT		1	1	1	
. NS	650164	. CAP VALVE / CHROME		1	1	1	
22	503404	TUBE, NYLON 3/8 O.D. / BLACK S.L.		AR	AR	AR	
23	503463	TUBE, NYLON 3/8 O.D. / GREEN S.L.		AR	AR	AR	
24	503402	TUBE, NYLON 1/4 O.D. / BLACK S.L.		AR	AR	AR	
25	503471	TUBE, NYLON 3/8 O.D. / BLUE S.L.		AR	AR	AR	
90	641528	VALVE, 3 WAYS, 2 POSITIONS N.O.			1		
. NS	641929	. COIL 24V			1		
. NS	641169	. SPOOL			1		
. NS	641385	. CONNECTOR / SOCKET HOUSING ASSY 3C / PNEUMAC 54934-01			1		
91	500174	SCREW CAP HEX 1/4-20x3 G5 PT ZP			2		

From 2-7800 To 5-8558		Date:07/2024	PAGE:Y2-1640-51
LEVEL-LOW - CONTROL PANEL & VALVES			

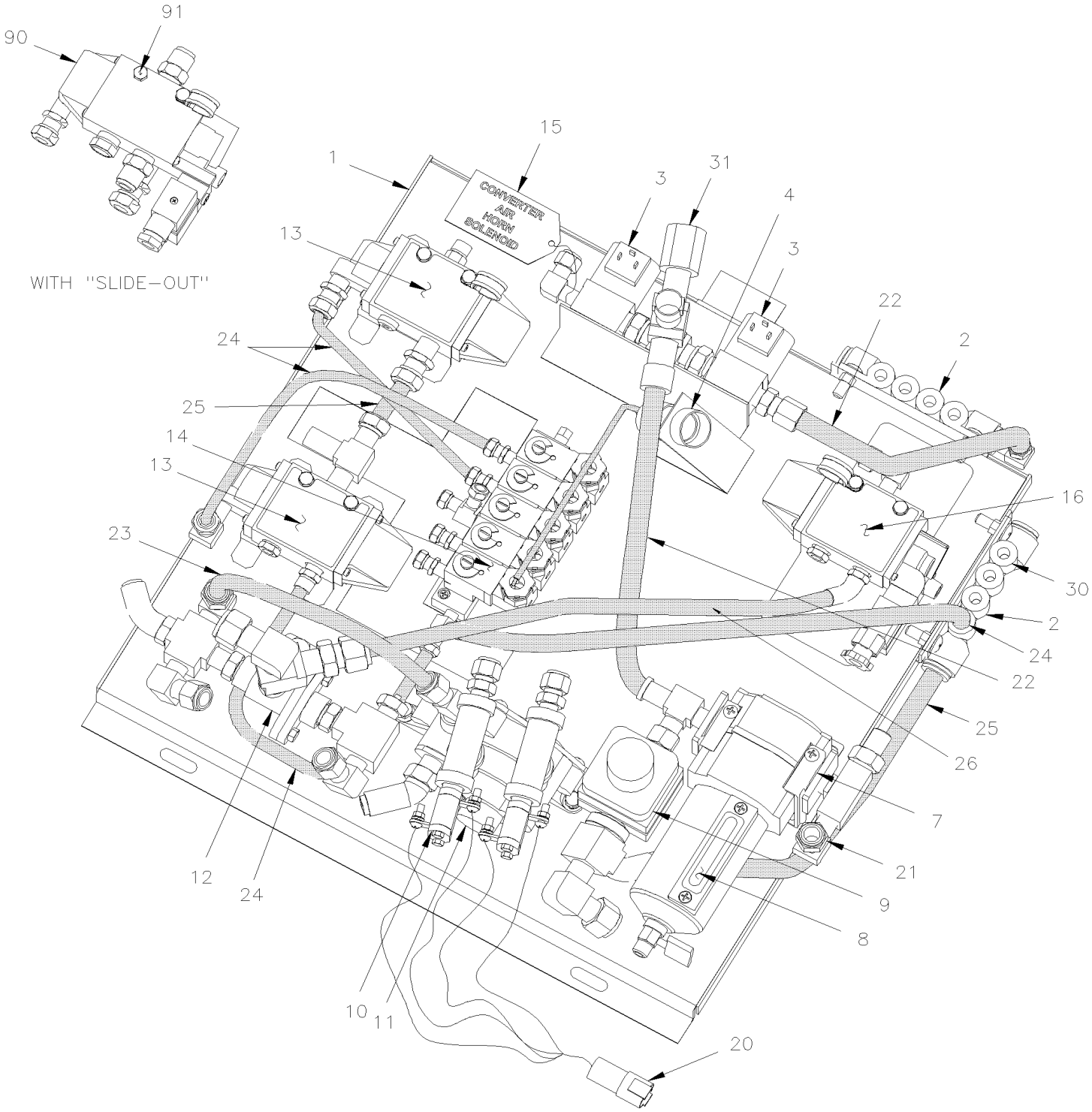

From 2-7800 To 5-8558		Date:07/2024	PAGE:Y2-1640-51

LEVEL-LOW - CONTROL PANEL & VALVES

Item#	Part	Description	XLII 45	XLII MTH40	XLII MTH45	XLII MTH45E	NOTES
1	142215	VALVE SUPPORT ASSY		1	1	1	
2	641897	MANIFOLD / PUSH-IN FITTING / 2x#6 / 4x#4 PLAS		2	2	2	
NS	500574	SCREW MA TR PH #10-24x1 1/4 SS		4	4	4	
3	562804	VALVE, 2 WAYS N.C.		2	2	2	
. NS	562848	. CONNECTOR / SOCKET HOUSING ASSY 3C / PNEUMAC 54933-05		1	1	1	
4	065429	CABLE ASSY / VALVE "LEVEL-LOW"		1	1	1	
7	641371	MALE ELBOW 90° NON-SWIVEL / PUSH-IN FITTING / #4x1/4NPT-M BR		1	1	1	
8	**Y2-1220-15**	**AIR FILTER - ACCESSORIES**					
NS	140227	DECAL / ACC AIR FILTER DRAIN / ENGLISH & FRANCAIS		1	1	1	
NS	142368	DECAL / ACC AIR FILTER DRAIN / ENGLISH & SPANISH		1	1	1	
9	641137	VALVE, PRESSURE PROTECTION TYPE PR-4 70PSI		1	1	1	
10	641174	PRESSURE SWITCH N.C. 30PSI / ¼NPT LP-2 To 3-7957		2	2	2	
10	287234	PRESSURE SWITCH N.C. 30-10 20PS001AB030E010E From 3-7958		2	2	2	
11	640870	VALVE / SPRING BRAKE SR-1		1	1	1	
. NS	640921	. REPAIR KIT / SR-1		1	1	1	
12	641015	VALVE, DOUBLE CHECK DC-4 To 3-8008		1	1	1	
12	641564	VALVE, DOUBLE CHECK DC-4 From 3-8009		1	1	1	
13	641274	VALVE, 3 WAYS, 2 POSITIONS N.C.		2	2	2	
14	641205	MANIFOLD VALVE / W/5 SOLENOID		1	1	1	
. NS	641928	. KIT, MANIFOLD REPAIR / N.C.		5	5	5	
. NS	641107	. COIL 24V		5	5	5	
15	142042	PLATE CONVERTER AIR HORN SOLENOID		1	1	1	
16	641528	VALVE, 3 WAYS, 2 POSITIONS N.O.		1	1	1	
. NS	641929	. COIL 24V		1	1	1	
. NS	641169	. SPOOL		1	1	1	
. NS	641385	. CONNECTOR / SOCKET HOUSING ASSY 3C / PNEUMAC 54934-01		1	1	1	
17	641934	SILENCER / MUFFLER / 3/8NPT-M		1	1	1	
20	065222	CABLE ASSY / PARKING BRAKE PRESSURE		1	1	1	
21	640488	VALVE, AIR FILL 1/8" NPT		1	1	1	
. NS	650164	. CAP VALVE / CHROME		1	1	1	
22	503404	TUBE, NYLON 3/8 O.D. / BLACK S.L.		AR	AR	AR	
23	503572	CRS TUBE ROUND 60W 4 1/2" O.D. X 1" X 240		AR	AR	AR	
24	503402	TUBE, NYLON 1/4 O.D. / BLACK S.L.		AR	AR	AR	
25	503471	TUBE, NYLON 3/8 O.D. / BLUE S.L.		AR	AR	AR	
26	503470	TUBE, NYLON 3/8 O.D. / YELLOW S.L.		AR	AR	AR	
30	641416	PLUG STEM / PUSH-IN FITTING / #4 PLAS		AR	AR	AR	
31	641936	BALL VALVE 1/4 NPT M x 1/4 NPT F		1	1	1	
90	641937	VALVE, 3 WAYS, 2 POSITIONS N.C. / W/MAN OVERRIDE		1	1	1	
. NS	641929	. COIL 24V		1	1	1	
. NS	641385	. CONNECTOR / SOCKET HOUSING ASSY 3C / PNEUMAC 54934-01		1	1	1	
91	500174	SCREW CAP HEX 1/4-20x3 G5 PT ZP		2	2	2	

From 5-8559 To 8-9339		Date:07/2024	PAGE:Y2-1640-52
LEVEL-LOW - CONTROL PANEL & VALVES			

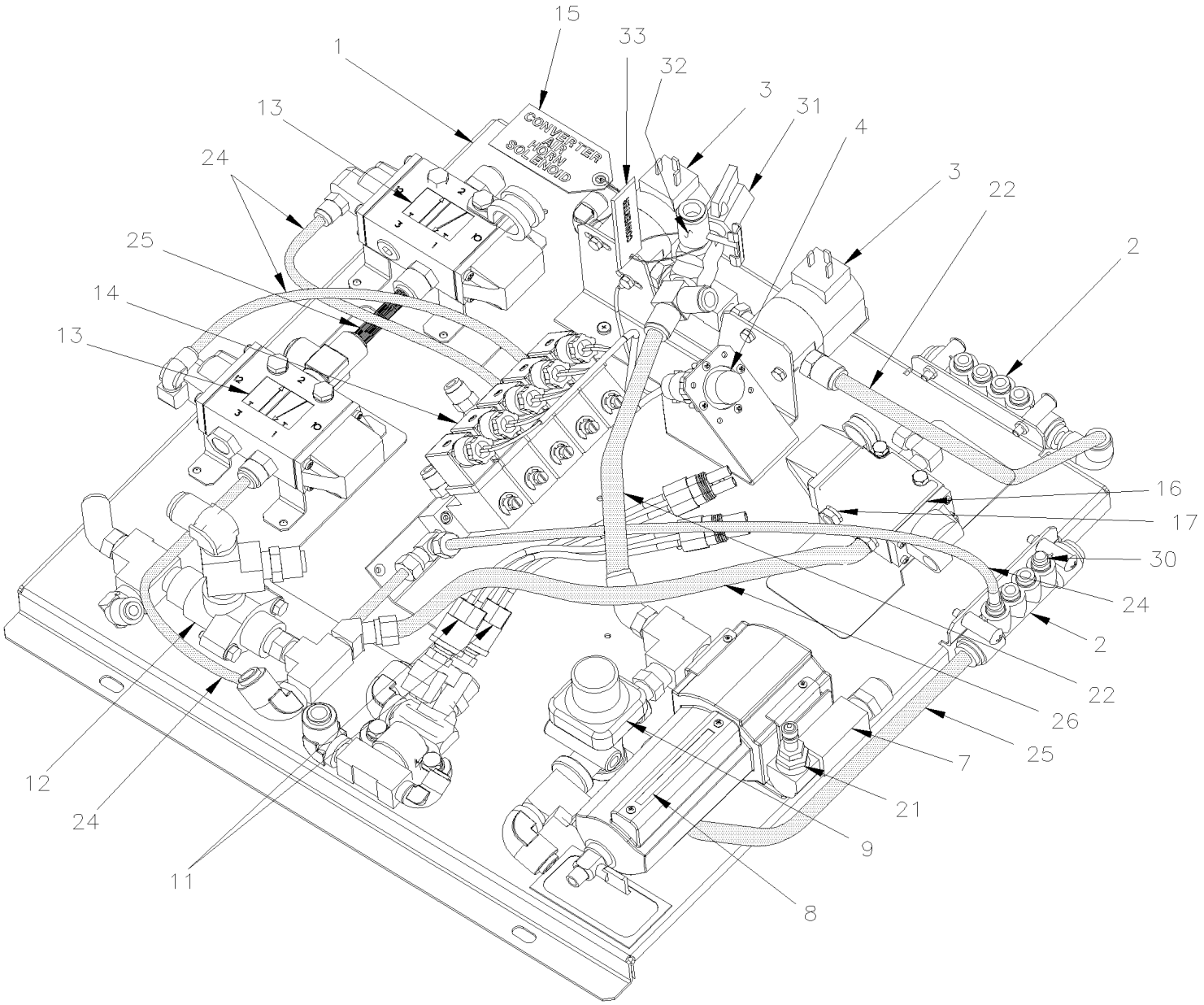

From 5-8559 To 8-9339		Date:07/2024	PAGE:Y2-1640-52

LEVEL-LOW - CONTROL PANEL & VALVES

Item#	Part	Description	XLII 45	XLII MTH40	XLII MTH45	XLII MTH45E	NOTES
1	142366	VALVE SUPPORT ASSY		1	1	1	
2	641897	MANIFOLD / PUSH-IN FITTING / 2x#6 / 4x#4 PLAS		2	2	2	
NS	500574	SCREW MA TR PH #10-24x1 1/4 SS		4	4	4	
3	562804	VALVE, 2 WAYS N.C.		2	2	2	
. NS	562848	. CONNECTOR / SOCKET HOUSING ASSY 3C / PNEUMAC 54933-05		1	1	1	
4	065429	CABLE ASSY / VALVE "LEVEL-LOW"		1	1	1	
7	641371	MALE ELBOW 90° NON-SWIVEL / PUSH-IN FITTING / #4x1/4NPT-M BR		1	1	1	
8	**Y2-1220-15**	**AIR FILTER - ACCESSORIES**					
NS	140227	DECAL / ACC AIR FILTER DRAIN / ENGLISH & FRANCAIS		1	1	1	
NS	142368	DECAL / ACC AIR FILTER DRAIN / ENGLISH & SPANISH		1	1	1	
9	641137	VALVE, PRESSURE PROTECTION TYPE PR-4 70PSI		1	1	1	
11	287234	PRESSURE SWITCH N.C. 30-10 20PS001AB030E010E		2	2	2	
12	641564	VALVE, DOUBLE CHECK DC-4		1	1	1	
13	641274	VALVE, 3 WAYS, 2 POSITIONS N.C.		2	2	2	
14	641205	MANIFOLD VALVE / W/5 SOLENOID		1	1	1	
. NS	641928	. KIT, MANIFOLD REPAIR / N.C.		5	5	5	
. NS	641107	. COIL 24V		5	5	5	
15	142042	PLATE CONVERTER AIR HORN SOLENOID		1	1	1	
16	641528	VALVE, 3 WAYS, 2 POSITIONS N.O.		1	1	1	
. NS	641929	. COIL 24V		1	1	1	
. NS	641169	. SPOOL		1	1	1	
. NS	641385	. CONNECTOR / SOCKET HOUSING ASSY 3C / PNEUMAC 54934-01		1	1	1	
17	641934	SILENCER / MUFFLER / 3/8NPT-M		1	1	1	
21	640488	VALVE, AIR FILL 1/8" NPT		1	1	1	
. NS	650164	. CAP VALVE / CHROME		1	1	1	
22	503404	TUBE, NYLON 3/8 O.D. / BLACK S.L.		AR	AR	AR	
23	503572	CRS TUBE ROUND 60W 4 1/2" O.D. X 1" X 240		AR	AR	AR	
24	503402	TUBE, NYLON 1/4 O.D. / BLACK S.L.		AR	AR	AR	
25	503471	TUBE, NYLON 3/8 O.D. / BLUE S.L.		AR	AR	AR	
26	503470	TUBE, NYLON 3/8 O.D. / YELLOW S.L.		AR	AR	AR	
30	641416	PLUG STEM / PUSH-IN FITTING / #4 PLAS		AR	AR	AR	
31	641936	BALL VALVE 1/4 NPT M x 1/4 NPT F		1	1	1	
32	5011129	NEEDLE VALVE 1/4 NPT M x 1/4 NPT F		1	1	1	
33	391812	IDENTIFICATION PLATE (CONVERTER)		1	1	1	

		Date:07/2024	Y2-18
BODY			

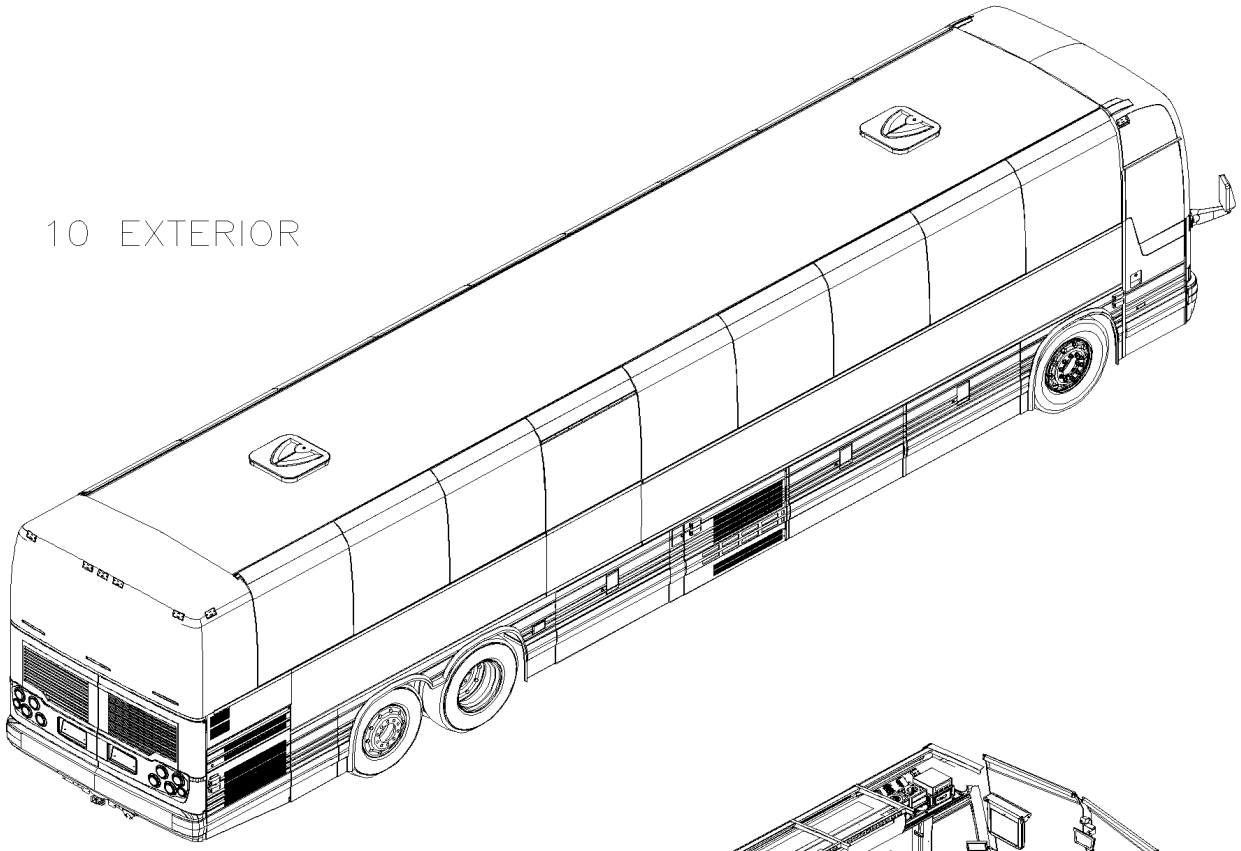

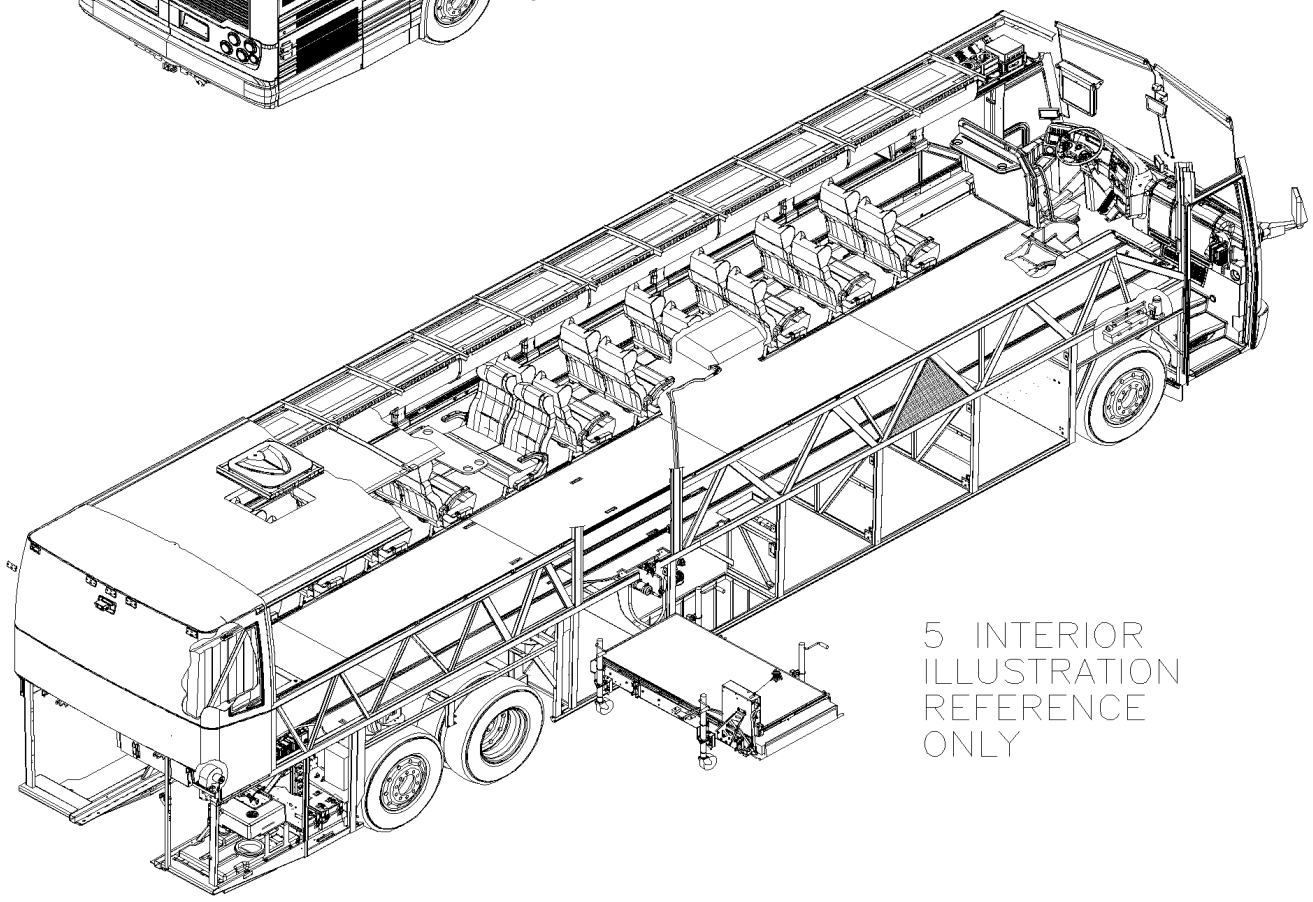

		Date:07/2024	Y2-18

BODY

Item#	Part	Description	XLII 45	XLII MTH40	XLII MTH45	XLII MTH45E	NOTES
5	Y2-18-INT	BODY INTERIOR					
10	Y2-18-EXT	BODY EXTERIOR					

		Date:07/2024	PAGE:Y2-18-INT
BODY INTERIOR			

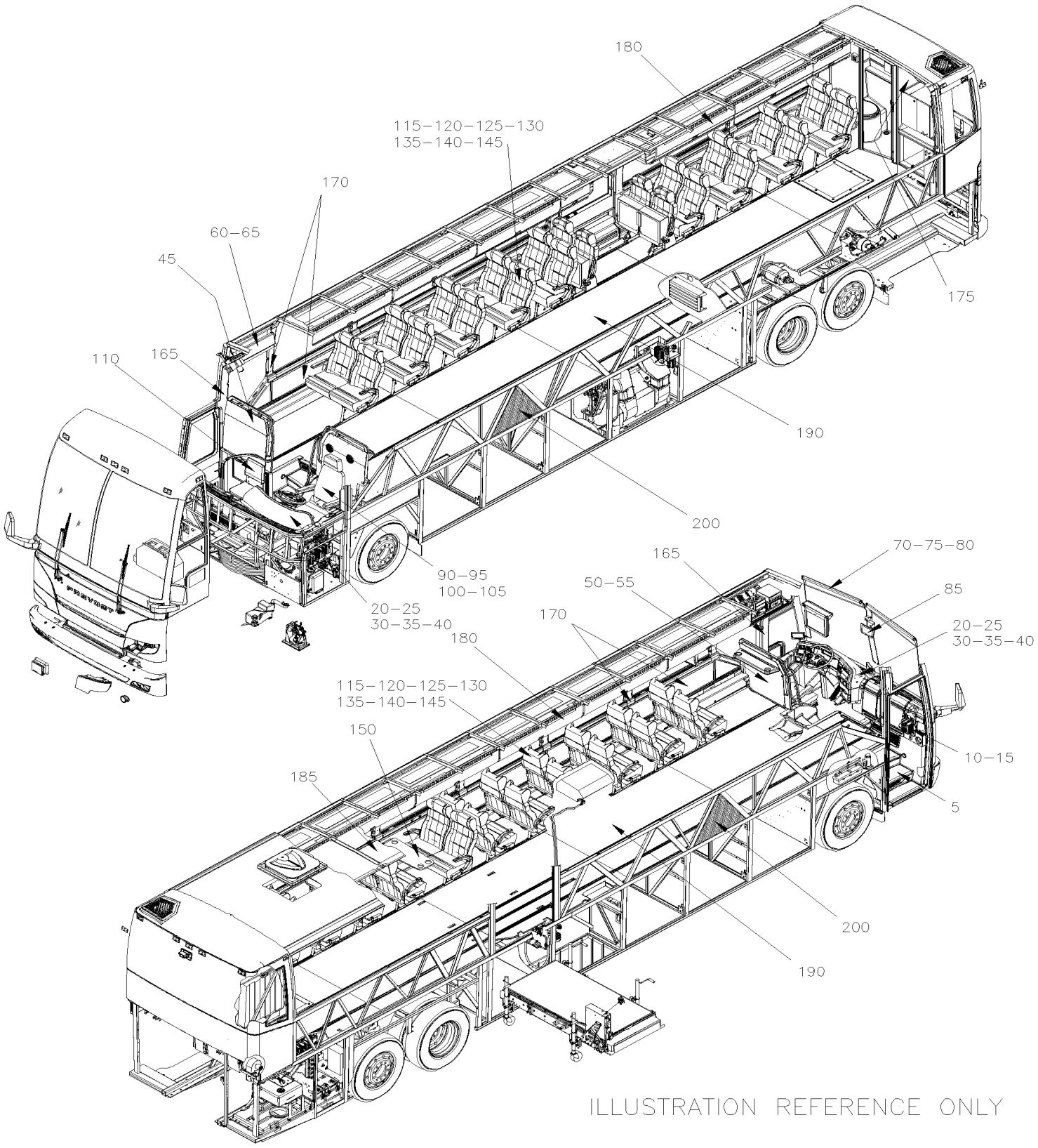

		Date:07/2024	PAGE:Y2-18-INT

BODY INTERIOR

Item#	Part	Description	XLII 45	XLII MTH40	XLII MTH45	XLII MTH45E	NOTES
5	Y2-1800-00	FRONT STEPWELL - BUS From Y-7046 To 6-8906					
5	Y2-1800-50	FRONT STEPWELL - MTH From Y-7046 To 8-9339					
10	Y2-1802-00	ENTRANCE DOOR CONTROL From Y-7046 To 6-8906					
15	Y2-1804-00	ENTRANCE DOOR LOCK From Y-7046 To 6-8906					
15	Y2-1804-50	ENTRANCE DOOR - VALVE - MTH From 2-7800 To 8-9339					
20	Y2-1806-00	CENTRAL DASHBOARD PANEL From Y-7046 To 8-9339					
25	Y2-1806-10	L.H. CONSOLE - BUS From Y-7046 To 6-8906					
30	Y2-1806-15	DASHBOARD - ASSY From Y-7046 To 8-9339					
35	Y2-1806-20	DASHBOARD PANEL From Y-7046 To 8-9339					
40	Y2-1806-50	L.H. CONSOLE - MTH From Y-7046 To 8-9339					
45	Y2-1810-00	MODESTY PANEL R.H. From Y-7046 To 6-8906					
50	Y2-1811-00	MODESTY PLEXIGLASS From Y-7046 To 6-8906					
55	Y2-1812-00	MODESTY PANEL L.H. From Y-7046 To 6-8906					
60	Y2-1814-01	DESTINATION SIGN - ELECTRICAL From Y-7046 To 6-8906					
60	Y2-1814-02	DESTINATION SIGN - "POCATEC" From Y-7046 To 6-8906					
65	Y2-1814-05	DESTINATION SIGN - INSTALLATION From Y-7046 To 6-8906					
70	Y2-1816-00	ROLLER BLIND - DRIVER' S & WINDSHIELD From Y-7046 To 8-9339					
70	Y2-1816-05	ROLLER BLIND - WINDSHIELD W/ELECTRICAL From Y-7046 To 8-9339					
75	Y2-1816-10	SUN SHADE - PASSENGER'S WINDOW From Y-7046 To 6-8906					
80	Y2-1817-00	SUN VISOR - "LE MIRAGE" From Y-7046 To 8-9339					
85	Y2-1820-00	MIRROR - INTERIOR From Y-7046 To 8-9339					
90	Y2-1821-01	DRIVER'S SEAT "NATIONAL SEATING" - MODEL 93B From Y-7046 To 6-8906					
95	Y2-1822-00	DRIVER'S SEAT - "ISRI" - 6800/338 From Y-7046 To 8-9339					
95	Y2-1822-10	DRIVER'S SEAT - "ISRI" - 6000/515 & 6500/515 From Y-7046 To 8-9339					
95	Y2-1822-50	DRIVER'S SEAT "ISRI" ASSY From Y-7046 To 8-9339					
100	Y2-1823-00	DRIVER'S SEAT - "RECARO" - ERGO-COACH From Y-7046 To 6-8906					
100	Y2-1823-10	BACKREST ASSY - "RECARO" - ERGO-COACH From Y-7046 To 6-8906					
100	Y2-1823-15	SEAT COVER & FOAM - "RECARO" - ERGO-COACH From Y-7046 To 6-8906					
100	Y2-1823-20	SUSPENSION & RISER - "RECARO" - ERGO-COACH From Y-7046 To 6-8906					
100	Y2-1823-25	SEAT CUSHION FRAME - "RECARO" - ERGO-COACH From Y-7046 To 6-8906					
100	Y2-1823-30	ARMREST - "RECARO" - ERGO-COACH From Y-7046 To 6-8906					
105	Y2-1823-50	DRIVER'S SEAT - "USSC" - 9100ALX3 From Y-7046 To 6-8906					
105	Y2-1823-60	SEAT ASSY - "USSC" - 9100ALX3 From Y-7046 To 6-8906					
105	Y2-1823-70	SUSPENSION ASSY - "USSC" - 9100ALX3 From Y-7046 To 6-8906					
105	Y2-1823-80	BASE ASSY - "USSC" - 9100ALX3 From Y-7046 To 6-8906					
110	Y2-1824-00	HOSTESS SEAT ASSY From Y-7046 To 6-8906					
115	Y2-1824-30	PASSENGER'S SEAT - "AMAYA" IDENTIFICATION "MODEL" From Y-7046 To 6-8906					
120	Y2-1825-02	PASSENGER'S SEAT - "AMERICAN" - W6695 From Y-7046 To 6-8906					
120	Y2-1825-03	PASSENGER'S SEAT - "AMERICAN" - W6696 & W7696 From Y-7046 To 6-8906					
120	Y2-1825-05	PASSENGER'S SEAT - "AMERICAN" - FRAME From Y-7046 To 6-8906					
120	Y2-1825-06	PASSENGER'S SEAT - "AMERICAN" SERIES 2000 & MORE From Y-7046 To 6-8906					
120	Y2-1825-10	PASSENGER'S SEAT - "AMERICAN" - FRAME ROTATIN From Y-7046 To 6-8906					

		Date:07/2024	PAGE:Y2-18-INT

BODY INTERIOR

Item#	Part	Description	XLII 45	XLII MTH40	XLII MTH45	XLII MTH45E	NOTES
120	Y2-1825-20	PASSENGER'S SEAT - "AMERICAN" - CUSHION From Y-7046 To 6-8906					
120	Y2-1825-31	PASSENGER'S SEAT - "AMERICAN" - BACKREST WX69 From Y-7046 To 6-8906					
120	Y2-1825-40	PASSENGER'S SEAT - "AMERICAN" - FOOTREST From Y-7046 To 6-8906					
120	Y2-1825-50	PASSENGER'S SEAT - "AMERICAN" - ARMREST From Y-7046 To 6-8906					
120	Y2-1825-51	PASSENGER'S SEAT - "AMERICAN" - ARMREST SERIES 2000 & MORE From Y-7046 To 6-8906					
120	Y2-1825-60	PASSENGER'S SEAT - "AMERICAN" - BACK & ACCESS From Y-7046 To 6-8906					
125	Y2-1826-00	PASSENGER'S SEAT - "NATIONAL" - 4209 & 4210 From Y-7046 To 6-8906					
130	Y2-1826-05	PASSENGER'S SEAT - "AMAYA" "EUROTECH" From Y-7046 To 6-8906					
130	Y2-1826-06	PASSENGER'S SEAT - "AMAYA" "BRASIL" From Y-7046 To 6-8906					
130	Y2-1826-07	PASSENGER'S SEAT - "AMAYA" "SIGLIUM" TORO & TORINO From Y-7046 To 6-8906					
130	Y2-1826-08	PASSENGER'S SEAT - "AMAYA" "GAUDI" From Y-7046 To 6-8906					
130	Y2-1826-40	PASSENGER'S SEAT - "AMAYA" - FOOTREST & PEDESTAL From Y-7046 To 6-8906					
130	Y2-1826-50	ARMREST PASSENGER'S SEAT - "AMAYA" WITH "EUROTECH" From Y-7046 To 6-8906					
130	Y2-1826-51	ARMREST PASSENGER'S SEAT - "AMAYA" WITH "BRASIL" From Y-7046 To 6-8906					
130	Y2-1826-52	ARMREST PASSENGER'S SEAT - "AMAYA" WITH "GAUDI" From Y-7046 To 6-8906					
130	Y2-1826-53	ARMREST PASSENGER'S SEAT - "AMAYA" WITH "SIGLIUM" TORO & TORINO From Y-7046 To 6-8906					
130	Y2-1826-60	ACCESSORIES PASSENGER'S SEAT - "AMAYA" From Y-7046 To 6-8906					
130	Y2-1826-71	PASSENGER'S SEAT - "AMAYA" - FLIP-UP "GAUDI" HR & SC - W/ W.C.L. From Y-7046 To 6-8906					
135	Y2-1827-02	PASSENGER'S SEAT - "ULTRA" From Y-7046 To 6-8906					
135	Y2-1827-11	PASSENGER'S SEAT - ROTATING "PREVOST From Y-7046 To 6-8906					
135	Y2-1827-52	ARMREST PASSENGER'S SEAT - "PREVOST" From Y-7046 To 6-8906					
135	Y2-1827-70	PASSENGER'S SEAT - "TOURISMO II" - FLIP-UP W/W.C.L. From Y-7046 To 6-8906					
140	Y2-1828-01	PASSENGER'S SEAT - "TOURISMO II" From Y-7046 To 6-8906					
145	Y2-1828-05	PASSENGER'S SEAT - "MULTINA" From 5-8579 To 6-8906					
145	Y2-1828-10	PASSENGER'S SEAT - "MULTINA" From 5-8579 To 6-8906					
145	Y2-1828-50	ARMREST PASSENGER'S SEAT- "MULTINA" From 5-8579 To 6-8906					
145	Y2-1828-60	ACCESSORIES PASSENGER'S SEAT - "MULTINA" From 5-8579 To 6-8906					
150	Y2-1829-00	ACCESSORIES PASSENGER'S SEAT - "PREVOST" From Y-7046 To 6-8906					
165	Y2-1832-00	FRONT FINISHING CAP - BUS From Y-7046 To 6-8906					
165	Y2-1832-50	FRONT FINISHING CAP - MTH From Y-7046 To 8-9339					
170	Y2-1833-00	WINDOW FINISHING CAP & WALL From Y-7046 To 6-8906					
175	Y2-1834-00	REAR FINISHING CAP From Y-7046 To 8-9339					
180	Y2-1836-00	PARCEL RACK From Y-7046 To 6-8906					
185	Y2-1837-00	CEILING PANELS & MOULDING - BUS From Y-7046 To 6-8906					
185	Y2-1837-50	CEILING PANELS & MOULDING - MTH From Y-7046 To 8-9339					
190	Y2-1838-00	FLOOR - BUS From Y-7046 To 6-8906					
190	Y2-1838-05	FLOOR & COVERING - "R.C.A." From Y-7046 To 6-8906					
190	Y2-1838-10	FLOOR COVERING - "TARAFLEX" From Y-7046 To 6-8906					
190	Y2-1838-50	FLOOR - MTH From Y-7046 To 8-9276					
190	Y2-1838-51	FLOOR - MTH From 8-9279 To 8-9339					
200	Y2-1839-00	INSULATING SIDE WALL - LOWER PANEL - BUS From Y-7046 To 2-7702					
200	Y2-1839-01	INSULATING SIDE WALL - LOWER PANEL - BUS From 2-7703 To 6-8906					

		Date:07/2024	PAGE:Y2-18-INT

BODY INTERIOR

Item#	Part	Description	XLII 45	XLII MTH40	XLII MTH45	XLII MTH45E	NOTES
200	Y2-1839-05	INSULATING FRONT - BUS From Y-7046 To 6-8906					
200	Y2-1839-10	INSULATING FLOOR REAR AXLE From Y-7046 To 8-9339					
200	Y2-1839-15	INSULATING FRONT - SUBFRAME From Y-7046 To 8-9339					
200	Y2-1839-20	INSULATING FLOOR & REAR - BUS From Y-7046 To 6-8906					
200	Y2-1839-25	INSULATING - REAR DPF FILTER From 8-9279 To 8-9339					
200	Y2-1839-30	INSULATING ROOF PANELS From Y-7046 To 8-9339					
200	Y2-1839-50	INSULATING SIDE WALL - LOWER PANEL - MTH From Y-7046 To 2-7702					
200	Y2-1839-51	INSULATING SIDE WALL - LOWER PANEL - MTH From 2-7703 To 8-9339					
200	Y2-1839-55	INSULATING FRONT - MTH From Y-7046 To 8-9339					
200	Y2-1839-60	INSULATING SIDE WALL - UPPER From Y-7046 To 8-9339					
200	Y2-1839-70	INSULATING REAR END INSIDE OVER ENGINE From Y-7046 To 7-9095					
200	Y2-1839-71	INSULATING REAR END INSIDE OVER ENGINE From 7-9096 To 8-9339					
200	Y2-1839-90	INSULATING - "SLIDE-OUT" From Y-7046 To 8-9339					

From Y-7046 To 6-8906		Date:07/2024	PAGE:Y2-1800-00
FRONT STEPWELL - BUS			

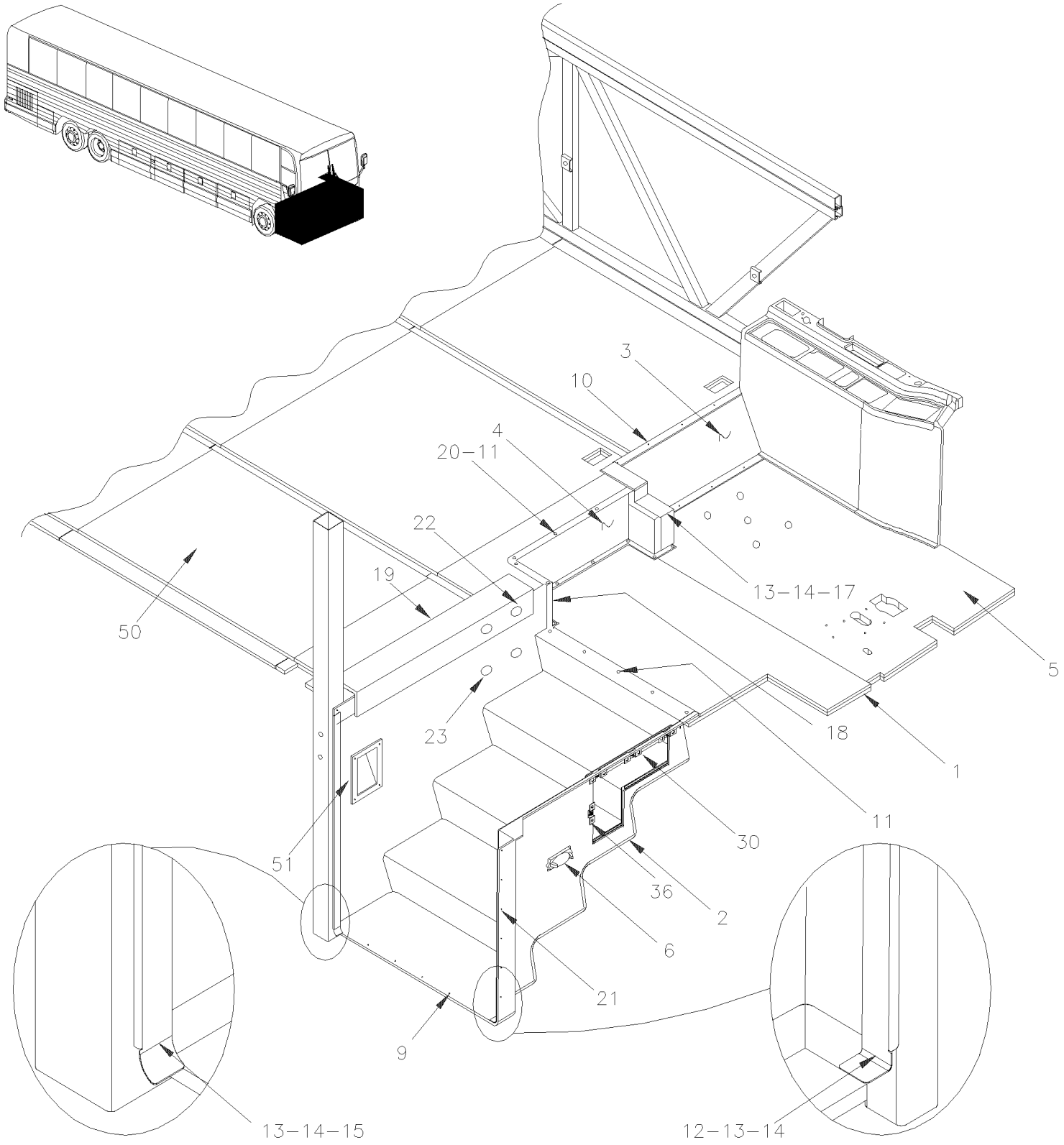

From Y-7046 To 6-8906		Date:07/2024	PAGE:Y2-1800-00

FRONT STEPWELL - BUS

Item#	Part	Description	XLII 45	XLII MTH40	XLII MTH45	XLII MTH45E	NOTES
1	326850	DRIVER'S FLOOR To Y-7349	1				
1	328862	DRIVER`S FLOOR From Y-7350 To 4-8173	1				
1	328044	DRIVER`S FLOOR "UNDER SEAT" From 4-8174	1				
2	326793	STEPWELL BUS	1				
2	3200091	STEPWELL BUS	1				
3	326944	FINISHING PLATE / DRIVER'S FLOOR To 2-7850	1				
3	327744	FINISHING PLATE / DRIVER'S FLOOR From 2-7851 To 4-8173	1				
3	328043	FINISHING PLATE / DRIVER'S FLOOR From 4-8174	1				
4	326861	AISLE STEP	1				
4	3200092	AISLE STEP	1				
5	328863	DRIVER`S FLOOR "STEPWELL SIDE" From Y-7350	1				
NS	5001143	SCREW DR WF TORX #12x2 CP	40				
6	**Y2-0655-00**	**INTERIOR LIGHTING**					
9	504339	RIVET POP DOME OE 1/8x3/8 SS	22				
NS	351262	INSULATING PANEL / BACKWARD / UNDER STEPWELL	1				A
NS	351263	INSULATING PANEL / FORWARD / UNDER STEPWELL	1				A
NS	503549	ANCHOR SELF-STICK 1"	3				
NS	500748	WASHER INSU G.10x1.125x1.250 Z050	3				
10	500640	SCREW TP PAN PH #6x3/4 Z050	8				
11	500844	SCREW TC FL PH #10-32x1 1/4 Z050	20				
12	327216	FINISHING MOULDING ENTRANCE STEP	1				
13	500345	WASHER FN CKF .187x.500x.090 BR BK	10				
14	500333	SCREW TP OV PH #6x3/4 BK	10				
15	327217	FINISHING MOULDING ENTRANCE STEP	1				
17	326992	FINISHING R.H. CONSOLE To 3-8164	1				I
17	328042	FINISHING R.H. CONSOLE From 4-8165	1				I
18	327323	FINISHING ANGLE STEP	1				
19	327324	FIXATION ANGLE STEP 1132MM	1				
NS	500640	SCREW TP PAN PH #6x3/4 Z050	3				
20	327325	ANGLE 770MM	1				
21	504416	RIVET POP DOME OE 3/16x5/8 SS	5				
22	504078	PLUG BUTTON / 1.000 O.D. / NICKEL & BRASS	2				
23	504638	HOLE PLUG BUTTON / 1.000 O.D. BLACK	2				
30	453428	GRILL AIR / FRONT STEPWELL / RETURN / 309MM X 424MM	1				
30	504681	. STUD 6MM (DZUS)	4				
30	504604	. FASTENER	4				
30	681283	. TAPE RUB ADH2 ACRYLIC .045" x 1/2" x 108' / WHITE 4945	AR				
30	453110	. REINFORCEMENT "Z" SHAPE 210MM	1				
30	453429	. REINFORCEMENT "Z" SHAPE 140MM	1				
36	504605	RECEPTACLE 6 MM	4				
NS	326869	INSERT RECEPTACLE RETAINER	4				
50	**Y2-1838-00**	**FLOOR - BUS**					

From Y-7046 To 6-8906		Date:07/2024	PAGE:Y2-1800-00

FRONT STEPWELL - BUS

Item#	Part	Description	XLII 45	XLII MTH40	XLII MTH45	XLII MTH45E	NOTES
51	**Y2-2221-20**	**ENTRANCE STEP DE-ICER**					
		A) UNDER STEPWELL					
		I) WITH INDEPENDANT SUSPENSION					

From Y-7046 To 8-9339		Date:07/2024	PAGE:Y2-1800-50
FRONT STEPWELL - MTH			

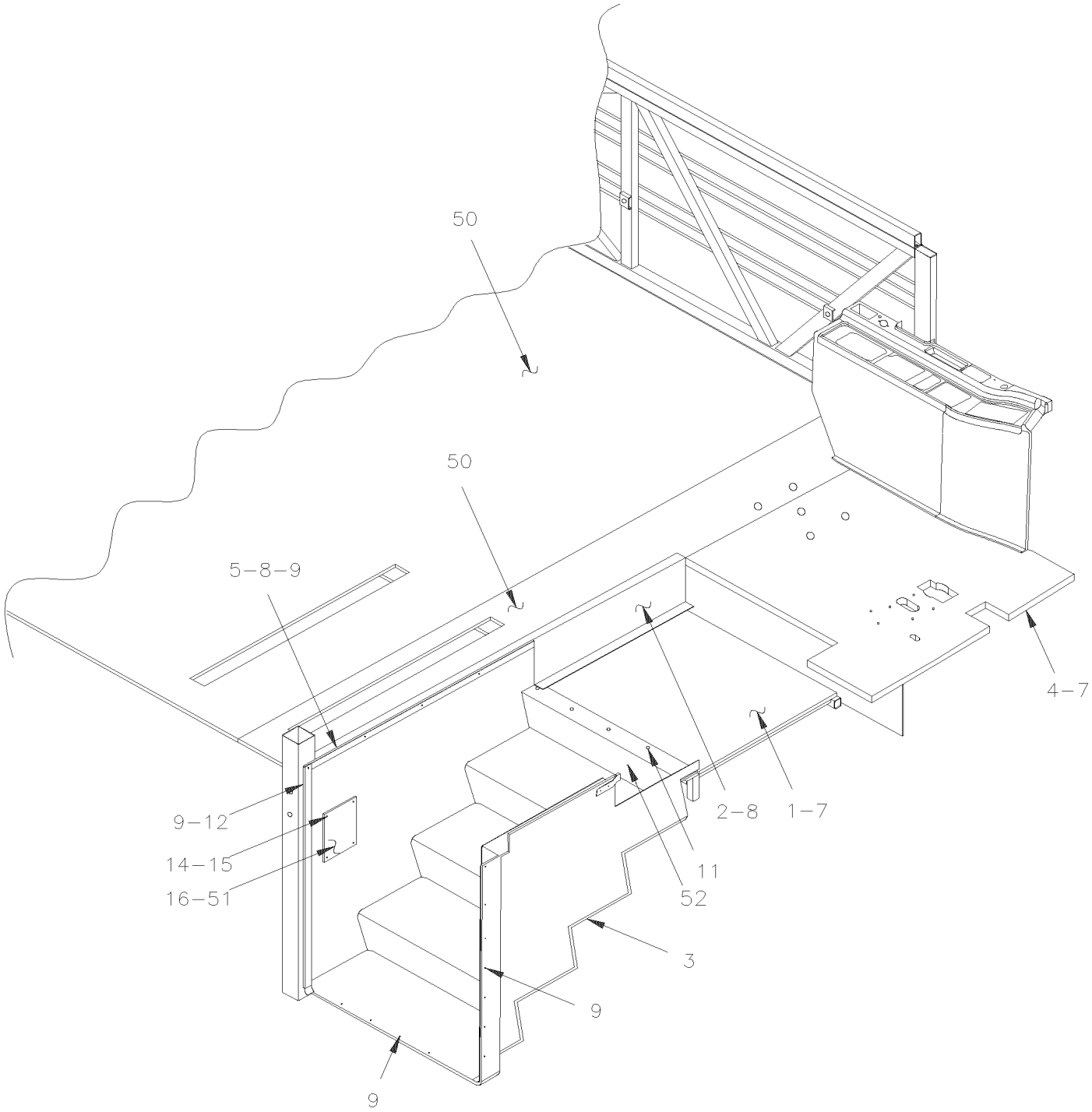

From Y-7046 To 8-9339		Date:07/2024	PAGE:Y2-1800-50

FRONT STEPWELL - MTH

Item#	Part	Description	XLII 45	XLII MTH40	XLII MTH45	XLII MTH45E	NOTES
1	326677	STEPWELL FLOOR		1	1	1	
2	326681	FINISHING PANEL STEPWELL		1	1	1	
3	326434	STEPWELL MTH		1	1	1	
4	326459	DRIVER`S FLOOR		1	1	1	
5	326679	MOULDING FINISHING		1	1	1	
7	5001535	SCREW DR WF RO #14x1 3/4 Z050		50	50	50	
8	500640	SCREW TP PAN PH #6x3/4 Z050		20	20	20	
9	504339	RIVET POP DOME OE 1/8x3/8 SS		6	6	6	
NS	680096	SEALANT BUTYL ALUM / GREY / 310ml CARTRIDGE		AR	AR	AR	
11	500844	SCREW TC FL PH #10-32x1 1/4 Z050		6	6	6	
12	326703	FINISHING MOULDING		1	1	1	
14	502774	NUT WELL #10-32x.625		4	4	4	
15	5001042	SCREW MA RND PH #10-32x1 1/4 SS		4	4	4	
16	327352	CLOSING PANEL		1	1	1	
50	**Y2-1838-50**	**FLOOR - MTH**					
51	**Y2-2221-20**	**ENTRANCE STEP DE-ICER**					
52	**Y2-2230-00**	**DEFROSTER - INSTALLATION**					

From Y-7046 To 6-8906		Date:07/2024	PAGE:Y2-1802-00
ENTRANCE DOOR CONTROL			

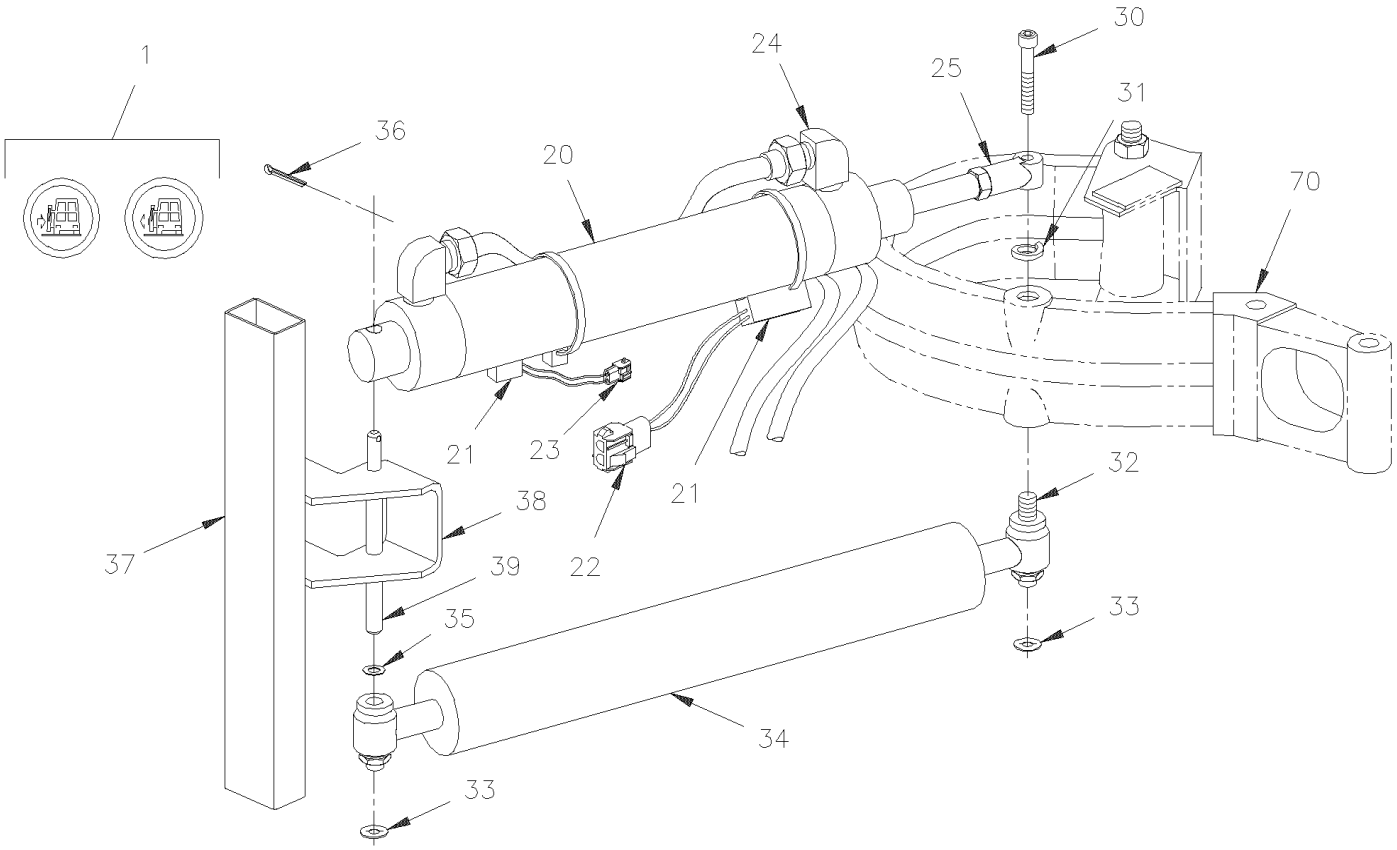

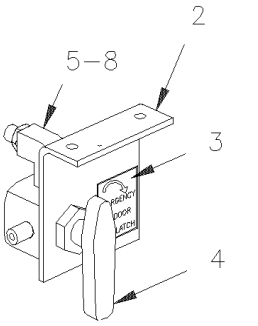

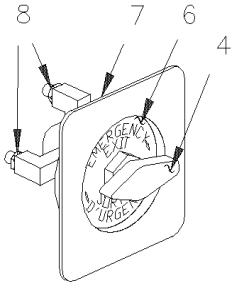

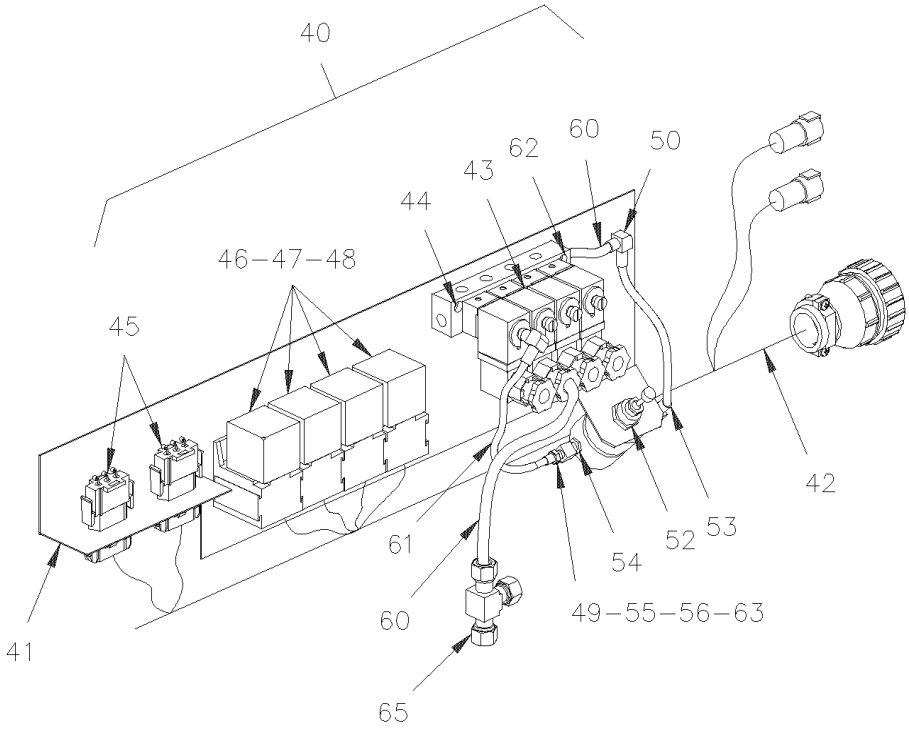

From Y-7046 To 6-8906		Date:07/2024	PAGE:Y2-1802-00

ENTRANCE DOOR CONTROL

Item#	Part	Description	XLII 45	XLII MTH40	XLII MTH45	XLII MTH45E	NOTES
1	**Y2-0645-30**	**R.H. DASHBOARD PANEL**					
2	285537	SUPPORT	1				
3	283989	DECAL "EMERGENCY DOOR VALVE" / IN STEERING COMPARTMENT	1				
4	641417	VALVE, 3 WAYS 1/8NPT-Fx1/8NPT-Fx1/8NPT-F BR	1				
. NS	642014	. HANDLE / RED	1				
4	642161	VALVE, 3 WAYS 1/8NPT-Fx1/8NPT-Fx1/8NPT-F BR / SERVICE	1				
. NS	642014	. HANDLE / RED	1				
5	641369	MALE ELBOW 90° NON-SWIVEL / PUSH-IN FITTING / #4x1/8NPT-M BR	2				
NS	507589	MALE BRANCHE TEE / PIPE FITTING / 1/8NPT-Fx1/8NPT-Fx1/8NPT-M BR	1				
6	284057	DECAL "EMERGENCY EXIT" / ENGLISH & FRANCAIS	1				
7	**Y2-1806-20**	**DASHBOARD PANEL**	1				
8	641242	MALE CONNECTOR / PUSH-IN FITTING / #4x1/8NPT-M BR	1				
20	780595	CYLINDER 2"	1				B
21	780594	LIMITING REED SWITCH ASSY S.P.S.T. N.O. / W/ 2" CYLINDER	2				
22	560900	CONNECTOR / COM. MATE-N-LOCK / PH 2C / AMP 1-480319-0	1				
22	560853	PIN TERMINAL / 24-18 / AMP 60618-1	2				
23	560898	CONNECTOR / COM. MATE-N-LOCK / SH 2C / AMP 1-480318-0	1				
23	560899	SOCKET TERMINAL / 20-14 / AMP 60619-1	2				
24	641371	MALE ELBOW 90° NON-SWIVEL / PUSH-IN FITTING / #4x1/4NPT-M BR	2				
25	502196	ROD END FEMALE 1/2-20 / 1/2 I.D.	1				
30	5001075	SCREW CAP BUT HEXS 1/2-13x2 Z050	1				
31	500482	WASHER LO SPT .506x.873x.125 Z050	1				
32	285433	PIVOT STUD 7/16-14 X 80MM LG	1				
33	502601	NUT SPR PO RND 7/16	2				
34	780565	SHOCK DAMPER "KONI" To 5-8392	1				
34	780714	SHOCK DAMPER "KONI" From 5-8393	1				
35	500445	WASHER FL .437x1.000x.083 Z050	1				
36	502102	PIN, COTTER 1/8 x 1	1				
37	251179	TUBE ASSY / W/CYLINDER SUPPORT	1				
37	251031	. TUBE	1				
38	251190	. SUPPORT / CYLINDER	1				
39	251191	. PIVOT PIN	1				
40	286573	SEDAN DOOR MODULE ASSY To 1-7479	1				
40	287233	SEDAN DOOR MODULE ASSY From 1-7480	1				
41	286574	. SUPPORT	1				
42	065114	. CABLE ASSY / ENTRANCE DOOR CONTROL PANEL	1				
43	641906	. MANIFOLD VALVE / W/4 SOLENOID	1				
. NS	641927	. . KIT, MANIFOLD REPAIR / N.O.	1				
. NS	641928	. . KIT, MANIFOLD REPAIR / N.C.	3				
. NS	641107	. . COIL 24V	1				
. NS	642213	. . MALE ELBOW 90° SWIVEL / PUSH-IN FITTING / #2x10-32 NP	1				
. NS	990143	. . MALE CONNECTOR / PUSH-IN FITTING / W/O-RING / #2x#10-32-M BR	1				

From Y-7046 To 6-8906		Date:07/2024	PAGE:Y2-1802-00

ENTRANCE DOOR CONTROL

Item#	Part	Description	XLII 45	XLII MTH40	XLII MTH45	XLII MTH45E	NOTES
. NS	641385	. . CONNECTOR / SOCKET HOUSING ASSY 3C / PNEUMAC 54934-01	1				
. NS	641455	. . REDUCER STEM / PUSH-IN FITTING / #2x#4 PLAS	1				
44	500495	. SCREW TP PAN PH #6x1 Z050	1				
45	062588	. DIODE ASSY / W/3 3AMPS	1				
46	561707	. RELAY 24V S.P.D.T. W/RESISTOR / To 5-8577	1				
46	563332	. RELAY 24V S.P.D.T. W/RESISTOR / "VOLVO" (20374662) From 5-8578	1				
47	500417	. SCREW TP PAN PH #6x3/8 Z050	1				
48	502630	. WASHER FL .156x.375x.049 Z050	1				
49	641242	. MALE CONNECTOR / PUSH-IN FITTING / #4x1/8NPT-M BR	1				
50	641447	. UNION ELBOW 90° / PUSH-IN FITTING / #4x#4 BR	1				
52	641472	. AIR PRESSURE REGULATOR 1/4" NPT / COPPER	1				
52	500734	. NUT HEX JAM 3/4-16 Z050	1				
53	641371	. MALE ELBOW 90° NON-SWIVEL / PUSH-IN FITTING / #4x1/4NPT-M BR	1				
54	501312	. BUSHING REDUCER / PIPE FITTING / 1/4NTP-Mx1/8NPT-F BR	1				
55	501354	. NEEDLE VALVE 1/8 NPT M x 1/8 NPT F	1				
56	641126	. MALE CONNECTOR / PUSH-IN FITTING / #2x1/8NPT-M BR	1				
58	640488	. VALVE, AIR FILL 1/8" NPT	1				
. NS	650164	. . CAP VALVE / CHROME	1				
59	501303	. PLUG SQUARE HEAD / PIPE FITTING / 1/8NPT-M BR	1				
60	503402	. TUBE, NYLON 1/4 O.D. / BLACK S.L.	1				
61	503536	. TUBE, NYLON 1/8 O.D. / BLACK S.L.	1				
63	501653	. MALE RUN TEE / PIPE FITTING / 1/8NPT-Mx1/8NPT-Fx1/8NPT-F BR	1				
65	641092	. UNION TEE / NTA FITTING / #4x#4x#4 BR From 1-7480	1				A
NS	287243	KIT ENTRANCE DOOR To 1-7249	1				
. NS	IS-00117	. SEE INSTRUCTION SHEET To 1-7249	1				
70	**Y2-1862-60**	**ENTRANCE DOOR FRAME - INSTALLATION**	1				
		A) FOR PRODUCT IMPROVMENT UP TO 1-7480 ASK FOR KIT #287243					
		B) THIS CYLINDER MAY BE SUPPERSEEDED BY 780418 WITH REMOVED DAMPER SHOCK ITEM # 34					

From Y-7046 To 6-8906		Date:07/2024	PAGE:Y2-1804-00
ENTRANCE DOOR LOCK			

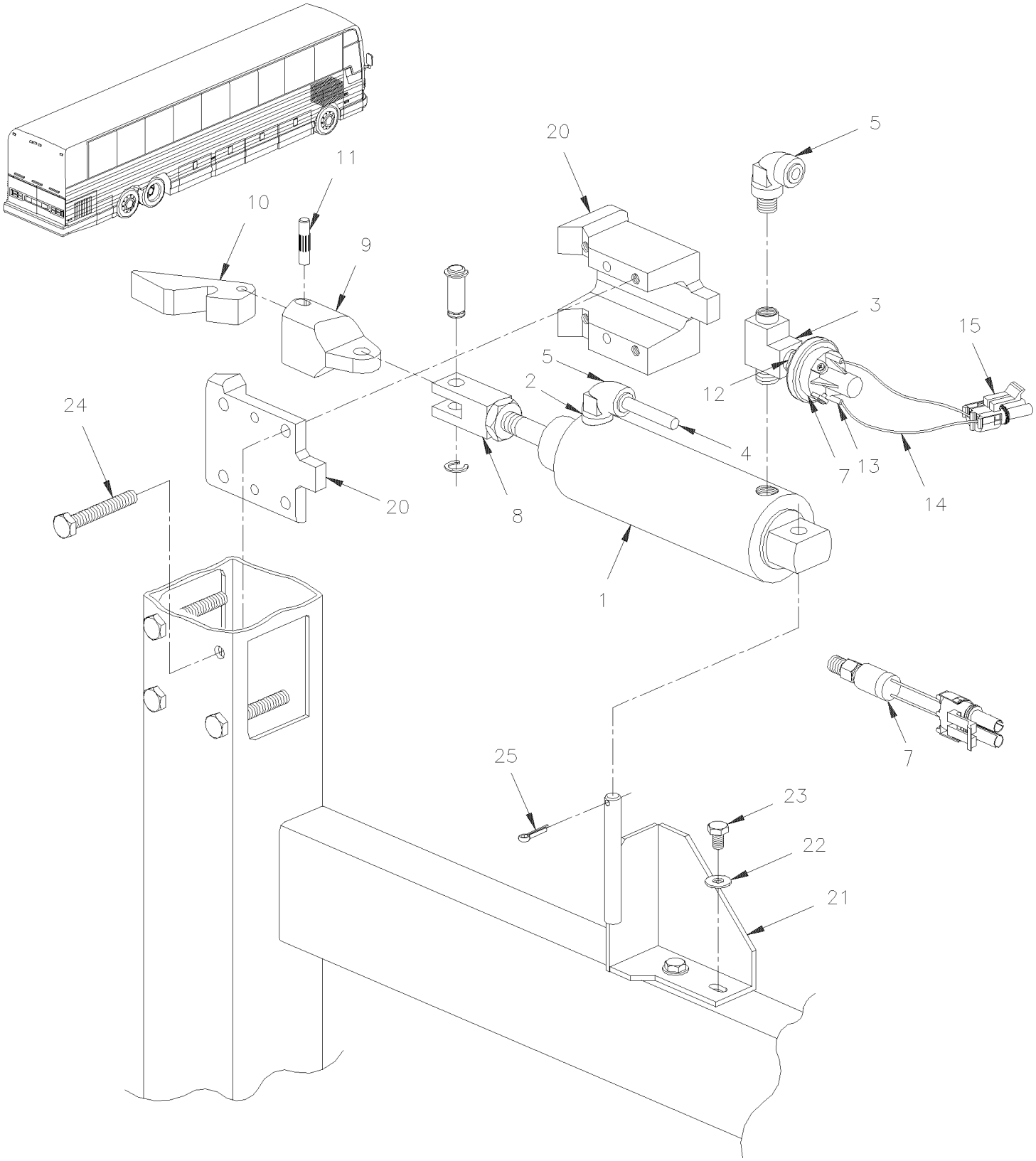

From Y-7046 To 6-8906		Date:07/2024	PAGE:Y2-1804-00

ENTRANCE DOOR LOCK

Item#	Part	Description	XLII 45	XLII MTH40	XLII MTH45	XLII MTH45E	NOTES
1	780623	CYLINDER 2"1/2 X- 1"1/2 STROKE To 4-8242	1				
1	641985	CYLINDER 2"1/2 X- 1"1/2 STROKE From 4-8243	1				
2	680098	THREAD SEALANT LOCTITE #567 / WHITE / 250ml	AR				
3	501338	MALE RUN TEE / PIPE FITTING / 1/4NPT-Mx1/4NPT-Fx1/4NPT-F BR	1				
4	503402	TUBE, NYLON 1/4 O.D. / BLACK S.L.	AR				
5	641371	MALE ELBOW 90° NON-SWIVEL / PUSH-IN FITTING / #4x1/4NPT-M BR	2				
7	560816	PRESSURE SWITCH N.C. 3PSI / 1/8NPT W/2 SCREWS To 1-7479	1				A
7	287234	PRESSURE SWITCH N.C. 30-10 20PS001AB030E010E From 1-7480	1				
NS	287243	KIT ENTRANCE DOOR To 1-7479	AR				
. NS	IS-00117	. SEE INSTRUCTION SHEET To 1-7479	1				
8	641216	YOKE	1				
. NS	642225	. CLIP	2				
9	286696	DOOR LOCK GUIDE	1				
10	286695	DOOR LOCK	1				
11	286694	ENTRANCE DOOR PIN	1				
12	501312	BUSHING REDUCER / PIPE FITTING / 1/4NTP-Mx1/8NPT-F BR	1				
13	560082	RING TERMINAL #10 / 16-14 / INSULATED / AMP 626033-2	2				
14	562590	WIRE CABLE 18 / RED / TXL	AR				
14	562587	WIRE CABLE 18 / BLACK / TXL	AR				
15	561689	SOCKET TERMINAL / 20-18 / PED 12089188	2				
NS	561565	CABLE SEAL / GREEN / PED 15324982	2				
NS	561690	CONNECTOR / WEATHER PACK / SH 2C / BLACK / PED 12015792	1				
20	286724	GUIDING BLOCK	1				
21	286700	SUPPORT ASSY W/PIN / BOLTED TO STRUCTURE To 1-7530	1				
. NS	286698	. PIN 3/8" O.D. X 78MM To 1-7530	1				
21	287952	SUPPORT ASSY W/PIN / (WELDED TO STRUCTURE) From 1-7531	1				
. NS	286698	. PIN 3/8" O.D. X 78MM From 1-7531	1				
22	500473	WASHER LO SPT .262x.489x.062 Z050	4				
23	500923	SCREW TC CAP HEX 1/4-20x3/4 Z050	2				
24	500167	SCREW CAP HEX 1/4-20x1 1/4 G5 PT Z050	2				
24	500994	SCREW CAP HEX 1/4-20x1 3/4 G5 PT Z050	2				
NS	500473	WASHER LO SPT .262x.489x.062 Z050	4				
25	502102	PIN, COTTER 1/8 x 1 To 1-7479	1				
25	502180	PIN HITCH CLIP 3/32 x 1/2 Z050 From 1-7480	1				
30	683276	GREASE LOW TEMPERATURE 450GR	AR				
		A) AS SHOWN AND FOR PRODUCT IMPROVMENT ASK FOR KIT #287243 UP TO 1-7479					

From 2-7800 To 8-9339		Date:07/2024	PAGE:Y2-1804-50
ENTRANCE DOOR - VALVE - MTH			

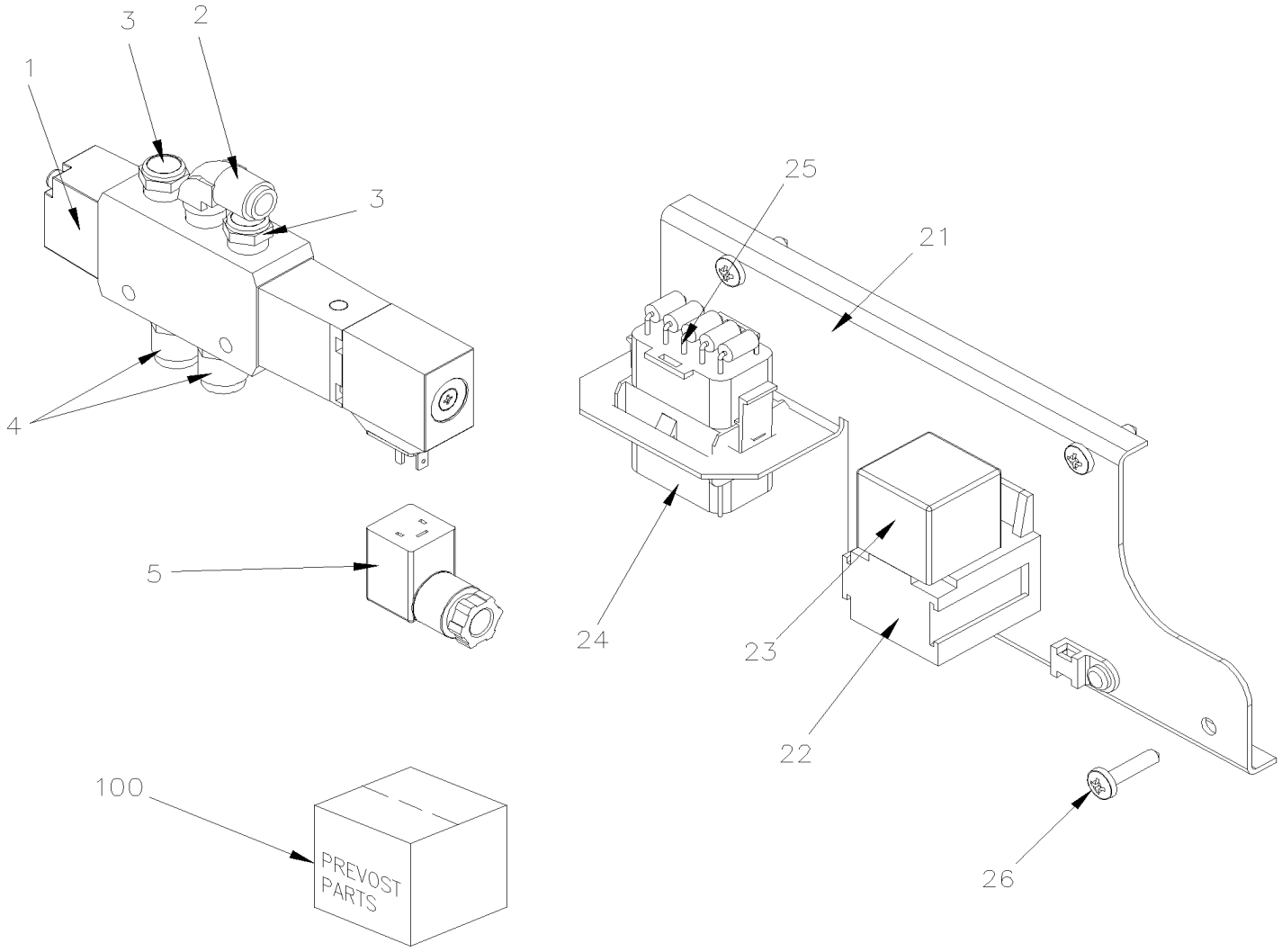

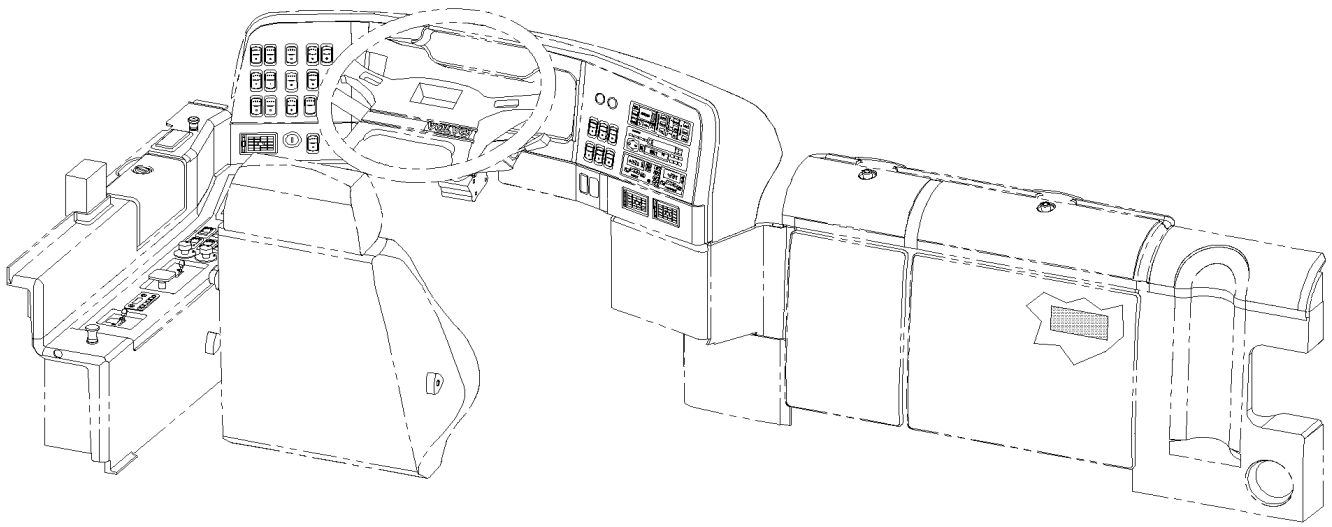

From 2-7800 To 8-9339		Date:07/2024	PAGE:Y2-1804-50
ENTRANCE DOOR - VALVE - MTH			

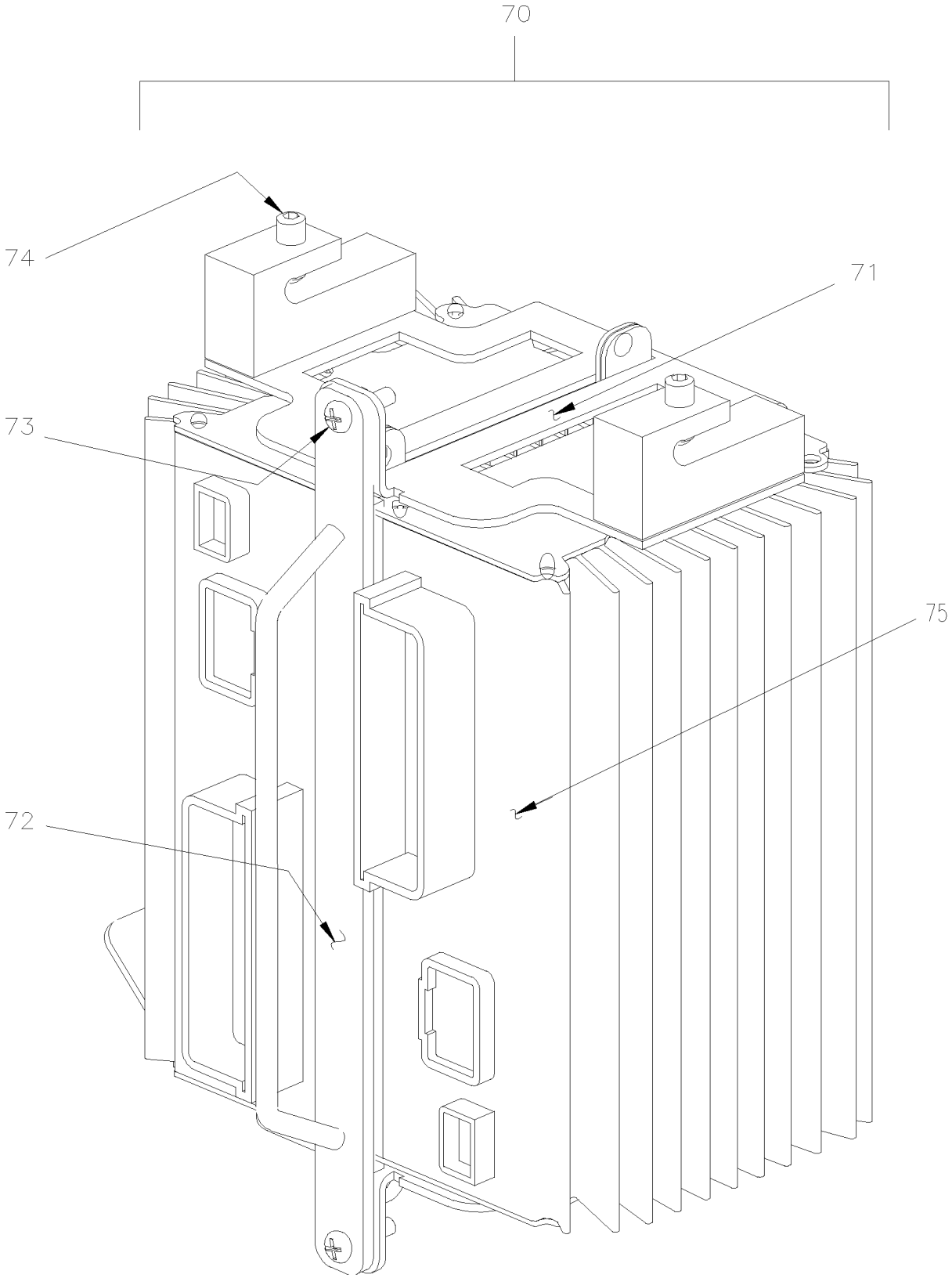

From 2-7800 To 8-9339		Date:07/2024	PAGE:Y2-1804-50

ENTRANCE DOOR - VALVE - MTH

Item#	Part	Description	XLII 45	XLII MTH40	XLII MTH45	XLII MTH45E	NOTES
1	641942	VALVE, 5 WAYS, 2 POSITIONS 24V / MODEL V60 To 5-8609		1	1	1	A
. NS	641944	. KIT REPAIR To 5-8609		1	1	1	A
. NS	641945	. COIL 24V To 5-8609		1	1	1	A
. NS	563147	. CONNECTOR / SOCKET HOUSING ASSY 3C / PNEUTECH C052-09-N-22 To 5-8609		1	1	1	A
1	642023	VALVE, 5 WAYS, 2 POSITIONS 24V / MODEL V19 From 5-8610		1	1	1	
. NS	641385	. CONNECTOR / SOCKET HOUSING ASSY 3C / PNEUMAC 54934-01 From 5-8610		1	1	1	
2	641369	MALE ELBOW 90° NON-SWIVEL / PUSH-IN FITTING / #4x1/8NPT-M BR		1	1	1	
3	641943	SILENCER / MUFFLER / 1/8NPT-M		2	2	2	
4	641242	MALE CONNECTOR / PUSH-IN FITTING / #4x1/8NPT-M BR		2	2	2	
5	563147	CONNECTOR / SOCKET HOUSING ASSY 3C / PNEUTECH C052-09-N-22		1	1	1	
21	288821	SUPPORT & RELAY ASSY		1	1	1	
22	561183	RELAY BASE / TAB TERMINAL / BOSCH 3334485008		1	1	1	
23	563332	RELAY 24V S.P.D.T. W/RESISTOR / "VOLVO" (20374662)		1	1	1	
24	561987	CONNECTOR / UNIVERSAL MATE-N-LOK / PH 15C / AMP 1-480711-0 / NATURAL		1	1	1	
25	381145	DIODE ASSY / W/5 3AMPS		1	1	1	
26	500641	SCREW TP PAN PH #8x3/4 Z050		3	3	3	
70	Call order desk	I/O B-MODULE VOLVO MULTIPLEX ASSY From 7-9096			1	1	P
71	382132	SUPPORT REAR I/O B MODULE From 7-9096					
72	382172	SUPPORT FRONT I/O B MODULE From 7-9096			1	1	
NS	506228	TAPE RUB ADH1 CC POL 1/4" x 1/2" x 37.5' / GREY 2520X From 7-9096			AR	AR	
73	502698	SCREW MA PAN PH M4-0.7x16 SS BK From 7-9096			1	1	
74	5001252	NUT HEX STO M20-2.5 DP From 7-9096			1	1	
75	563273	I/O B-MODULE VOLVO MULTIPLEX / ALUMINUM From 7-9096 To 7-9116			1	1	
. NS	563132	. CONNECTOR / SH 2C / YAZAKI 7283-6458-40 From 7-9096 To 7-9116			1	1	
. NS	563133	. CONNECTOR / JUNIOR POWER TIMER / SH 29C / AMP 1-963449-2 From 7-9096 To 7-9116			1	1	
. NS	562957	. CONNECTOR / SH 5C / GREEN / JAE IL-AG5-5S-S3C1 From 7-9096 To 7-9116			1	1	
75	565865	I/O B-MODULE VOLVO MULTIPLEX / ALUMINUM From 7-9117			1	1	
. NS	563132	. CONNECTOR / SH 2C / YAZAKI 7283-6458-40 From 7-9117			1	1	
. NS	563133	. CONNECTOR / JUNIOR POWER TIMER / SH 29C / AMP 1-963449-2 From 7-9117			1	1	
. NS	562957	. CONNECTOR / SH 5C / GREEN / JAE IL-AG5-5S-S3C1 From 7-9117			1	1	
100	142489	KIT, ENTRANCE DOOR VALVE REPLACEMENT / V19 TO V60 To 5-8609		1	1	1	
. NS	IS-04066	. SEE INSTRUCTION SHEET To 5-8609		1	1	1	
		A) THIS VALVE IS SUPERSEEDED BY KIT #142489					
		P) CALL ORDER DESK FOR SPECIFIC APPLICATION (V.I.N.)					

From Y-7046 To 8-9339		Date:07/2024	PAGE:Y2-1806-00
CENTRAL DASHBOARD PANEL			

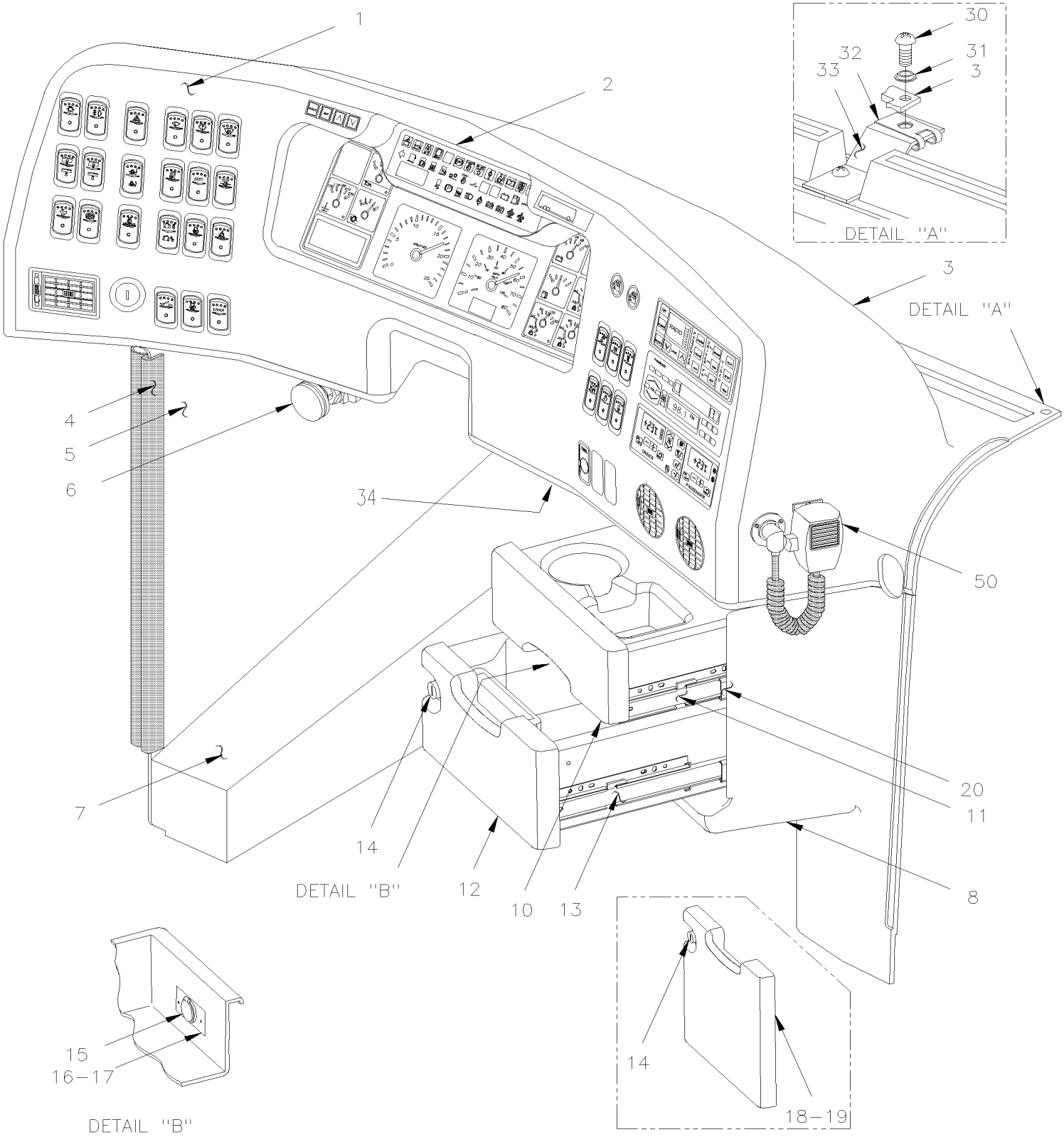

From Y-7046 To 8-9339		Date:07/2024	PAGE:Y2-1806-00

CENTRAL DASHBOARD PANEL

Item#	Part	Description	XLII 45	XLII MTH40	XLII MTH45	XLII MTH45E	NOTES
1	392110	PANEL / FRONT INSTRUMENTATION To 2-7864	1				S
1	392219	PANEL / FRONT INSTRUMENTATION From 2-7865 To 6-8906	1				R
1	392304	PANEL / FRONT INSTRUMENTATION	1				K
1	392025	PANEL / FRONT INSTRUMENTATION To 2-7864		1	1	1	T
1	392221	PANEL / FRONT INSTRUMENTATION From 2-7865 To 4-8212		1	1	1	R
1	392243	PANEL / FRONT INSTRUMENTATION From 4-8213 To 6-8956		1	1	1	
1	392314	PANEL / FRONT INSTRUMENTATION From 6-8957 To 7-9073		1	1	1	U
1	392243	PANEL / FRONT INSTRUMENTATION From 7-9074		1	1	1	
1	5001411	SCREW MA FL PH M4-0.7x20 BK To 2-7864	AR	AR	AR	AR	
1	500345	WASHER FN CKF .187x.500x.090 BR BK To 2-7864	AR	AR	AR	AR	
2	**Y2-0645-10**	**L.H. DASHBOARD PANEL**					
2	**Y2-0645-20**	**CENTER DASHBOARD PANEL**					
2	**Y2-0645-30**	**R.H. DASHBOARD PANEL**					
NS	063070	HARNESS ASSY / ALARM To 7-9095	1	1	1	1	
NS	404571	CABLE ASSY / DASH & PARCEL RACK To 6-8797	1				
2	409149	CABLE ASSY / DASH & PARCEL RACK / AUDIO From 6-8798 To 6-8906	1				
NS	065108	WIRING HARNESS DASHBOARD CENTRAL MODULE To Y-7267	1				
NS	065325	WIRING HARNESS DASHBOARD CENTRAL MODULE From Y-7268 To 2-7763	1				
NS	065561	WIRING HARNESS DASHBOARD CENTRAL MODULE From 2-7764 To 4-8212	1				
NS	065763	WIRING HARNESS DASHBOARD CENTRAL MODULE From 4-8213 To 4-8358	1				
NS	066093	WIRING HARNESS DASHBOARD CENTRAL MODULE From 5-8359 To 5-8469	1				
NS	066096	WIRING HARNESS DASHBOARD CENTRAL MODULE From 5-8470 To 5-8644	1				
NS	066437	WIRING HARNESS DASHBOARD CENTRAL MODULE From 5-8645 To 6-8906	1				
NS	064849	WIRING HARNESS DASHBOARD CENTRAL MODULE To Y-7267		1	1	1	
NS	065324	WIRING HARNESS DASHBOARD CENTRAL MODULE From Y-7268 To 1-7411		1	1	1	
NS	065428	WIRING HARNESS DASHBOARD CENTRAL MODULE From 1-7412 To 2-7763		1	1	1	
NS	065563	WIRING HARNESS DASHBOARD CENTRAL MODULE From 2-7764 To 3-8130		1	1	1	
NS	065765	WIRING HARNESS DASHBOARD CENTRAL MODULE From 3-8131 To 4-8212		1	1	1	
NS	065855	WIRING HARNESS DASHBOARD CENTRAL MODULE From 4-8213 To 5-8469		1	1	1	
NS	066098	WIRING HARNESS DASHBOARD CENTRAL MODULE From 5-8470 To 5-8644		1	1	1	
2	066339	WIRING HARNESS DASHBOARD CENTRAL MODULE From 5-8645		1	1	1	
2	066386	WIRING HARNESS DASHBOARD CENTRAL MODULE From 6-8806 To 7-9095		1	1	1	
2	066774	WIRING HARNESS DASHBOARD CENTRAL MODULE From 7-9096		1	1	1	
3	392112	COVER, DASHBOARD PANEL / BUS To 6-8906	1				
3	392027	COVER, DASHBOARD PANEL / MTH		1	1	1	C
3	392179	COVER, DASHBOARD PANEL / MTH 89"		1	1	1	A
3	392144	COVER, DASHBOARD PANEL / MTH 89"				1	
4	504675	RUBBER EXTRUSION TRIM SEAL / GRIP .040/.070 / 5/8" HOLLOW BULB C.T.L.	AR	AR	AR	AR	
5	392109	STRUCTURE / L.H. To 2-7864	1				
5	392218	STRUCTURE / L.H. From 2-7865 To 6-8906	1				
5	392312	PARTIAL STRUCTURE TO FIT "VOLVO" AUDIO SOUND To 6-8906	1				K
5	392305	ADAPTOR RADIO TO STRUCTURE To 6-8906	1				K

From Y-7046 To 8-9339		Date:07/2024	PAGE:Y2-1806-00

CENTRAL DASHBOARD PANEL

Item#	Part	Description	XLII 45	XLII MTH40	XLII MTH45	XLII MTH45E	NOTES
5	392024	STRUCTURE / L.H. To 2-7864		1	1	1	C
5	392218	STRUCTURE / L.H. From 2-7865 To 6-8956		1	1	1	C
5	392302	STRUCTURE / L.H. From 6-8957		1	1	1	C
5	392180	STRUCTURE / L.H. To 2-7864		1	1	1	A
5	392220	STRUCTURE / L.H. From 2-7865 To 6-8956		1	1	1	A
5	392316	STRUCTURE / L.H. From 6-8957		1	1	1	A
5	392320	ADAPTOR TO CONVERT UPPER HVAC TO LOWER / "W " SHAPE SS From 6-8957		1	1	1	V
NS	562361	PROTECTIVE CAP / HD10 SERIES / 6C / DEUTSCH HDC16-6-BLACK	1	1	1	1	F
NS	562492	TYPE A COUPLING	1	1	1	1	F
NS	562493	CHAIN / C.T.L.	1	1	1	1	F
NS	562494	RING / ATTACHMENT END	1	1	1	1	F
6	641445	VALVE, 3 WAYS, 2 POSITIONS MECHANICAL	1	1	1	1	
. NS	641992	. KNOB	1	1	1	1	
NS	5001403	SCREW MA CHE PH M5-0.8x40 ZP	2	2	2	2	
NS	500964	WASHER FL .203x.500x.047 Z050	2	2	2	2	
NS	502782	NUT HEX NYRT M5-0.8 Z050	2	2	2	2	
NS	501307	ADAPTER / PIPE FITTING / 1/8NPT-Fx1/8NPT-M BR	1	1	1	1	
NS	641365	MALE ELBOW 45° NON-SWIVEL / PUSH-IN FITTING / #4x1/8NPT-M BR	2	2	2	2	
NS	392073	ACCESS PANEL / FOR WIPER REPAIR	1	1	1	1	
7	392013	FOOT REST / SUPPORT	1	1	1	1	
NS	5001036	SCREW MA PAN PH M4-0.7x10 Z050	4	4	4	4	
8	392028	UNDER DASH PANEL ASSY W/FLIP-UP BOX To 2-7720	1				J
. NS	901217	. LATCH GRABBER CATCH / 44N PLASTIC BLACK To 2-7720	1				J
8	392111	UNDER DASH PANEL From 2-7721 To 6-8906	1				
8	392026	UNDER DASH PANEL		1	1	1	
8	392181	UNDER DASH PANEL		1	1		B
8	392182	UNDER DASH PANEL		1	1	1	G
8	392068	UNDER DASH PANEL		1	1	1	E
8	Call order desk	UNDER DASH PANEL		1	1	1	P J
8	392199	UNDER DASH PANEL / BLACK		1	1	1	D
8	392028	UNDER DASH PANEL ASSY W/FLIP-UP BOX		1	1	1	J
. NS	901217	. LATCH GRABBER CATCH / 44N PLASTIC BLACK		1	1	1	J
10	391932	DRAWER, UPPER / BLACK From 2-7721	1	1	1	1	
. NS	392237	. SUPPORT MAGNETIC LOCK / UPPER DRAWER From 2-7721	1	1	1	1	
. NS	392241	. CATCH MAGNETIC LOCK LOWER DRAWER From 2-7721	1	1	1	1	
. NS	504733	. KIT SLIDE TRACK / FIXED AT DRAWER From 2-7721	1	1	1	1	
NS	066888	CABLE ASSY / W/3.5MM / "I POD" / 12' To 6-8906	1				I
11	504677	. RAIL ASSY 8" / (SET) From 2-7721	1	1	1	1	
NS	504673	CATCH MAGNETIC From 2-7721	2	2	2	2	
12	391933	DRAWER, LOWER / BLACK From 2-7721	1	1	1	1	
. NS	392238	. SUPPORT MAGNETIC LOCK / LOWER DRAWER From 2-7721	1	1	1	1	
. NS	392240	. CATCH MAGNETIC LOCK LOWER DRAWER From 2-7721	1	1	1	1	

From Y-7046 To 8-9339		Date:07/2024	PAGE:Y2-1806-00

CENTRAL DASHBOARD PANEL

Item#	Part	Description	XLII 45	XLII MTH40	XLII MTH45	XLII MTH45E	NOTES
. NS	504733	. KIT SLIDE TRACK / FIXED AT DRAWER From 2-7721	1	1	1	1	
13	504678	. RAIL ASSY 10" / (SET) From 2-7721	1	1	1	1	
NS	504673	CATCH MAGNETIC From 2-7721	2	2	2	2	
14	504672	LATCH ASSY W/2 KEYS	1	1	1	1	
. NS	810084	. KEY / (CH751)	1	1	1	1	
14	810084	. KEY / (CH751)	2	2	2	2	
15	562796	12 VOLTS POWER OUTLET	1	1	1	1	
16	500343	SCREW MA FL PH M4-0.7x16 ZP	2	2	2	2	
NS	500590	NUT HEX NYRT M4-0.7 Z050	2	2	2	2	
18	392028	UNDER DASH PANEL ASSY W/FLIP-UP BOX	1	1	1	1	
. NS	901217	. LATCH GRABBER CATCH / 44N PLASTIC BLACK	1	1	1	1	
19	392205	. COVER ONLY / W/OUT BOX OR DRAWER	1	1	1	1	
NS	504673	CATCH MAGNETIC	2	2	2	2	
NS	392239	SUPPORT MAGNET FLIP-UP BOX	1	1	1	1	
20	392012	MOUNTING PLATE / DRAWER	4	4	4	4	
NS	5001413	SCREW MA FL PH M4-0.7x20 Z050	AR	AR	AR	AR	
30	5001411	SCREW MA FL PH M4-0.7x20 BK	AR	AR	AR	AR	
30	392144	COVER, DASHBOARD PANEL / MTH 89"				1	
31	500345	WASHER FN CKF .187x.500x.090 BR BK	AR	AR	AR	AR	
32	5001406	NUT SPR U M4-0.7 0.8-4.0x13.5	AR	AR	AR	AR	
33	**Y2-2230-00**	**DEFROSTER - INSTALLATION**					
34	563063	SENSOR THERMISTOR ASSY / TEMPERATURE / ("DELPHI")	1	1	1	1	
50	**Y2-2315-00**	**SOUND SYSTEM & ACCESSORIES - "R.E.I."**					
NS	392227	KIT, PANEL / FRONT INSTRUMENTATION / BUS SERIES "XL-II" To 2-7864	1				
NS	392228	KIT, PANEL / FRONT INSTRUMENTATION / MTH SERIES "XL-II" To 2-7864		1	1	1	
NS	405844	KIT, RETROFIT "VOLVO" SOUND SYSTEM "XL" To 6-8906	AR				L
		A) USE WITHOUT HANDRAIL					
		B) USE WITHOUT HANDRAIL & WITHOUT DRAWER					
		C) USE WITH HANDRAIL					
		D) USE WITHOUT HANDRAIL & WITH DRAWER					
		E) USE WITH HANDRAIL WITHOUT DRAWER & WITHOUT FLIP-UP BOX					
		F) ITEMS ARE RELATED WITH CONNECTOR FOR DIAGNOSTIC "DDEC"					
		G) USE WITHOUT HANDRAIL & WITH FLIP-UP BOX					
		I) REQUIRE "VOLVO" SOUND SYSTEM SEE NOTE "K" & "L"					
		J) USE WITH HANDRAIL & WITH FLIP-UP BOX					
		K) THIS PART ARE INCLUDE IN RETROFIT KIT# 405844 "VOLVO" AUDIO SOUND SYSTEM					
		L) FOR DETAIL SEE PAGES Y2-2315-99 & Y2-2317-99					
		R) PANEL WITH ROUND LOUVERS					
		S) PANEL WITH RECTANGULAR LOUVERS ARE SUPERSEEDED BY KIT #392227					

From Y-7046 To 8-9339		Date:07/2024	PAGE:Y2-1806-00

CENTRAL DASHBOARD PANEL

Item#	Part	Description	XLII 45	XLII MTH40	XLII MTH45	XLII MTH45E	NOTES
		T) PANEL WITH RECTANGULAR LOUVERS ARE SUPERSEEDED BY KIT #392228					
		V) THIS PART ARE REQUIRE TO CONVERT UPPER HVAC TO LOWER HVAC ON STRUCTURE # 392302 & 392316					
		P) CALL ORDER DESK FOR SPECIFIC APPLICATION (V.I.N.)					

		Date:07/2024	PAGE:Y2-1806-10
L.H. CONSOLE - BUS			

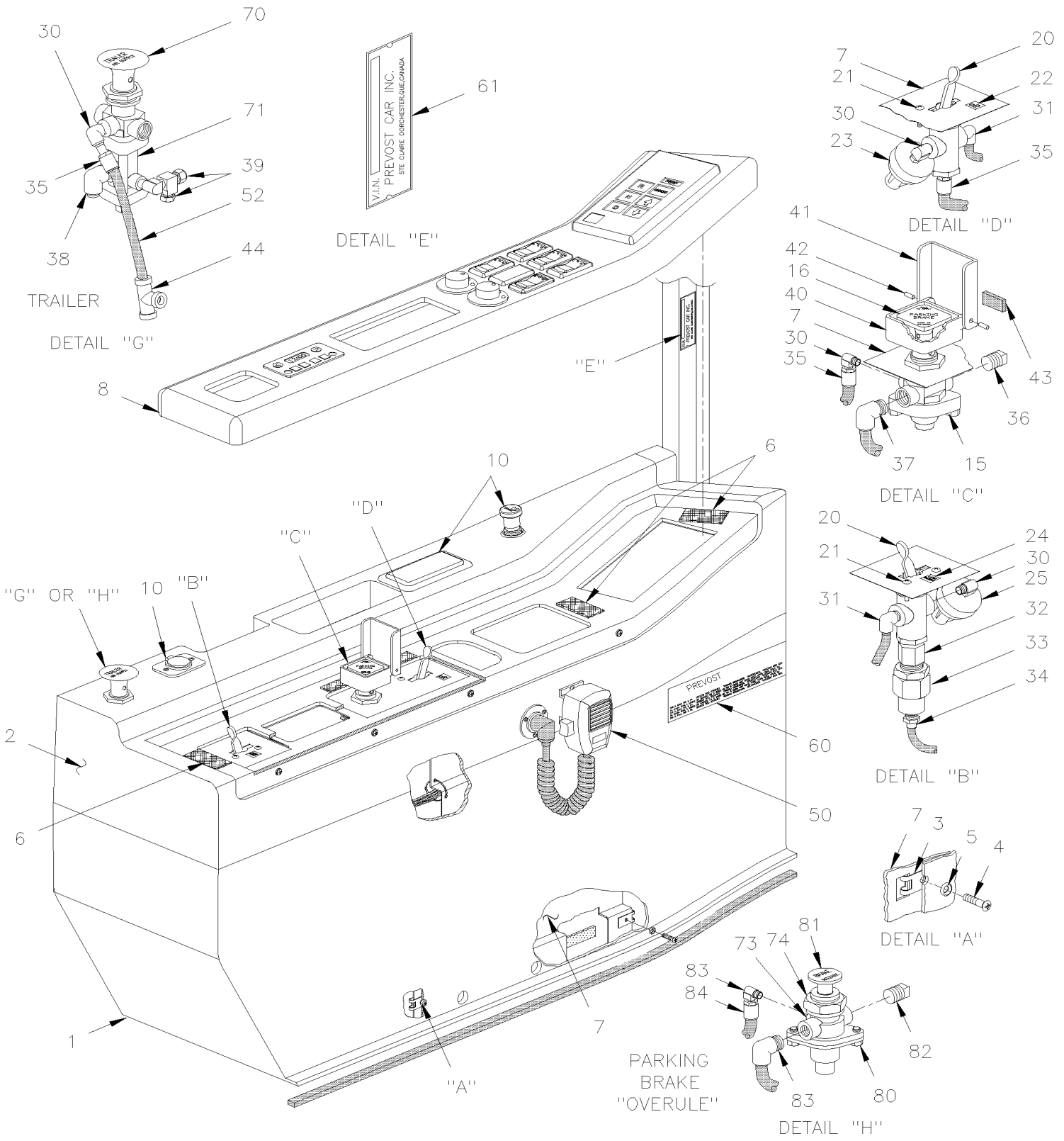

		Date:07/2024	PAGE:Y2-1806-10

L.H. CONSOLE - BUS

Item#	Part	Description	XLII 45	XLII MTH40	XLII MTH45	XLII MTH45E	NOTES
1	392042	CONSOLE / LOWER	1				
2	392114	CONSOLE / W/ASHTRAY & LIGHTER	1				
2	392115	CONSOLE / W/O ASHTRAY & W/O LIGHTER	1				
2	392143	CONSOLE / W/LIGHTER	1				
2	392171	CONSOLE / W/ASHTRAY & LIGHTER	1				E
2	392172	CONSOLE / W/O ASHTRAY & W/O LIGHTER	1				E
2	392173	CONSOLE / W/LIGHTER	1				E
3	5001405	NUT SPR U M4-0.7 0.8-4.0x9.5	10				
4	5001414	SCREW MA FL PH M4-0.7x16 BK	10				
5	500345	WASHER FN CKF .187x.500x.090 BR BK	10				
6	506493	TAPE DUAL LOCK 1/2" x 150' / BLACK SJ3541	AR				
7	392039	STRUCTURE ASSY	1				
8	392118	PANEL / W/AUTOMATIC TRANSMISSION W/PREAHEAT TIMER "WORLD"	1				
8	392119	PANEL / W/AUTOMATIC TRANSMISSION WO/PREAHEAT TIMER "WORLD"	1				
8	392166	PANEL / W/TIMER	1				E
8	392165	PANEL / W/O TIMER	1				E
10	**Y2-0645-00**	**SWITCHES L.H. CONSOLE - BUS**					
15	641128	VALVE, CONTROL VALVE PP-1 / 40PSI	1				
. NS	641154	. REPAIR KIT / PP-1 & RD-3	1				
NS	640297	. NUT	1				
15	640286	. PIN ROLLER	1				
16	641149	. BUTTON, PARKING BRAKE DIAMOND YELLOW / 1"	1				
20	640136	VALVE, CONTROL TW-1	1				
. NS	641156	. REPAIR KIT / TW-1	1				
21	500572	SCREW MA TR PH #10-24x1/2 SS BK	2				
22	391952	DECAL "TAG"	1				
23	562518	PRESSURE SWITCH N.O. 4PSI / 1/8NPT W/2 SCREWS / TAG	1				
NS	063892	WIRE ASSY / W/LOW BUOY	1				
24	391951	DECAL "LOW BUOY"	1				
25	560816	PRESSURE SWITCH N.C. 3PSI / 1/8NPT W/2 SCREWS	1				
30	501331	STREET ELBOW 90º / PIPE FITTING / 1/8NPT-Mx1/8NPT-F BR	3				
31	641369	MALE ELBOW 90° NON-SWIVEL / PUSH-IN FITTING / #4x1/8NPT-M BR	3				
32	501310	ADAPTER / PIPE FITTING / 1/4NPT-Fx1/8NPT-M BR	1				
33	640135	VALVE, CHECK 1/4 NPT	1				
34	641332	MALE CONNECTOR / PUSH-IN FITTING / #4x1/4NPT-M BR	1				
35	641349	MALE CONNECTOR / PUSH-IN FITTING / #6x1/8NPT-M BR	1				
36	501304	PLUG SQUARE HEAD / PIPE FITTING / 1/4NPT-M BR	1				
37	641371	MALE ELBOW 90° NON-SWIVEL / PUSH-IN FITTING / #4x1/4NPT-M BR	1				
38	641372	MALE ELBOW 90° NON-SWIVEL / PUSH-IN FITTING / #6x1/4NPT-M BR	1				
39	641002	MALE RUN TEE / NTA FITTING / #4x#4x1/8NPT-M BR	1				
40	391727	PROTECTOR BOX ASSY / OVER PARKING BRAKE VALVE	1				
40	391725	. BOX	1				

		Date:07/2024	PAGE:Y2-1806-10

L.H. CONSOLE - BUS

Item#	Part	Description	XLII 45	XLII MTH40	XLII MTH45	XLII MTH45E	NOTES
41	391726	. COVER / CLEAR PLASTIC	1				
42	505221	. SPRING, PIN 1/8 X 3/8	1				
43	506035	. TAPE RUB ADH1 NEO 1/2" x 1" x 15' / BLACK 1220X	1				
44	641922	UNION TEE / PUSH-IN FITTING / #6x#6x#6 BR	1				
50	**Y2-2315-00**	**SOUND SYSTEM & ACCESSORIES - "R.E.I."**					
60	Call order desk	PLATE / V.I.N.	1				P
61	Call order desk	PLATE / V.I.N.	1				P
NS	504107	RIVET POP DOME OE 1/8x5/16 AL	2				
70	641935	BUTTON RED / FOR TRAILER VALVE PP-7	1				
71	641397	TRAILER SUPPLY VALVE PP-7	1				
NS	452043	PRESSURE SWITCH N.O. 60-35 20SP001AA060E035E	1				
73	640297	NUT	1				
74	640286	PIN ROLLER	1				
80	640472	VALVE, CONTROL / RD-3	1				
. NS	641154	. REPAIR KIT / PP-1 & RD-3	1				
81	641155	BUTTON, OVERRULE ROUND BLACK	1				
82	501303	PLUG SQUARE HEAD / PIPE FITTING / 1/8NPT-M BR	1				
83	641370	MALE ELBOW 90° NON-SWIVEL / PUSH-IN FITTING / #6x1/8NPT-M BR	2				
84	641242	MALE CONNECTOR / PUSH-IN FITTING / #4x1/8NPT-M BR	1				
NS	405158	CARD HOLDER SS / 8 3/4" x 11" x 1" TH	1				
NS	500649	SCREW TP BDG PH #6x3/4 BK	6				
		E) WITH TRANSMISSION "EATON"					
		P) CALL ORDER DESK FOR SPECIFIC APPLICATION (V.I.N.)					

From Y-7046 To 8-9339		Date:07/2024	PAGE:Y2-1806-15
DASHBOARD - ASSY			

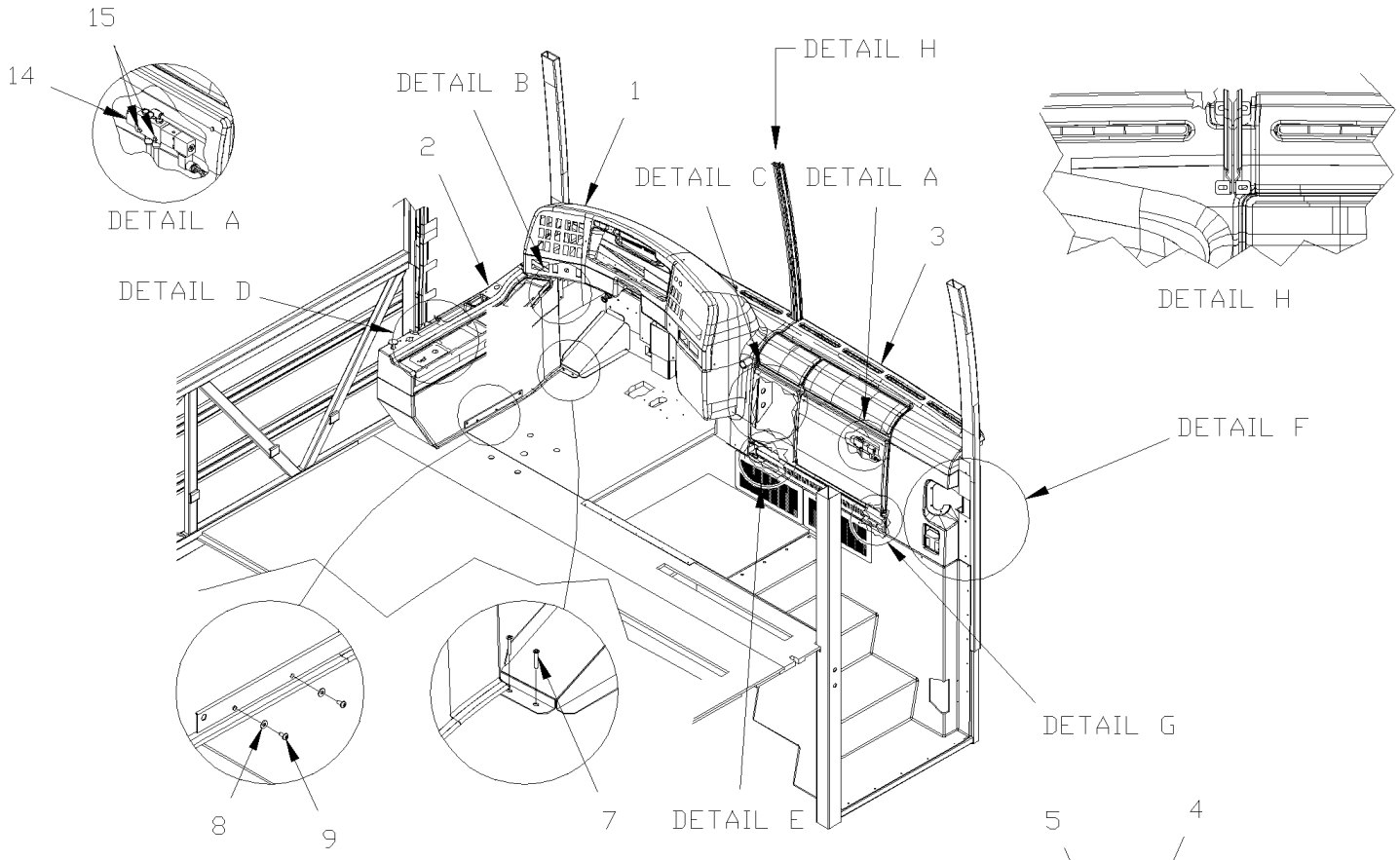

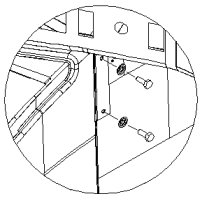

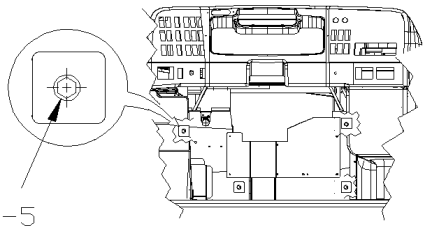

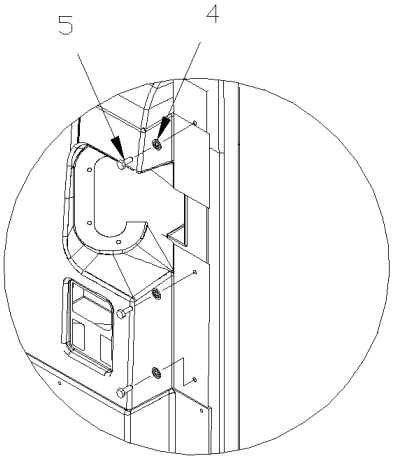

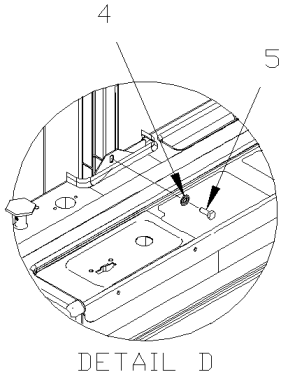

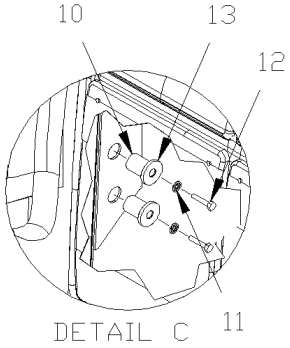

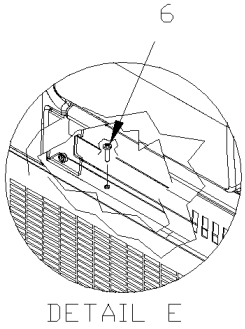

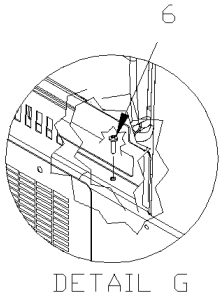

From Y-7046 To 8-9339		Date:07/2024	PAGE:Y2-1806-15

DASHBOARD - ASSY

Item#	Part	Description	XLII 45	XLII MTH40	XLII MTH45	XLII MTH45E	NOTES
1	**Y2-1806-00**	**CENTRAL DASHBOARD PANEL**					
2	**Y2-1806-10**	**L.H. CONSOLE - BUS To 6-8906**					
2	**Y2-1806-50**	**L.H. CONSOLE - MTH**					
3	**Y2-1806-20**	**DASHBOARD PANEL**					
4	502582	WASHER LO SERR 6.1x16.2x0.9 Z050	6	6	6	6	
5	500923	SCREW TC CAP HEX 1/4-20x3/4 Z050	6	6	6	6	
6	500641	SCREW TP PAN PH #8x3/4 Z050	3	3	3	3	
7	5001531	SCREW TP FL PH #10x1 SS410	2	2	2	2	
8	500964	WASHER FL .203x.500x.047 Z050	2	2	2	2	
9	500613	SCREW TP PAN PH #10x1/2 Z050	2	2	2	2	
10	890007	UNION TUBE	2	2	2	2	
11	502507	WASHER LO SPT 8.1x14.8x2.0 Z050	2	2	2	2	
12	502797	SCREW CAP HEX M8-1.25x70 G10.9 G500	2	2	2	2	
13	5001164	WASHER FL 8.4x25.0x2.0 Z050	2	2	2	2	
14	**Y2-1804-50**	**ENTRANCE DOOR - VALVE - MTH**					
15	5001074	SCREW CAP HEX M4-0.7x30 G8.8 Z050		2	2	2	

From Y-7046 To 8-9339		Date:07/2024	PAGE:Y2-1806-20
DASHBOARD PANEL			

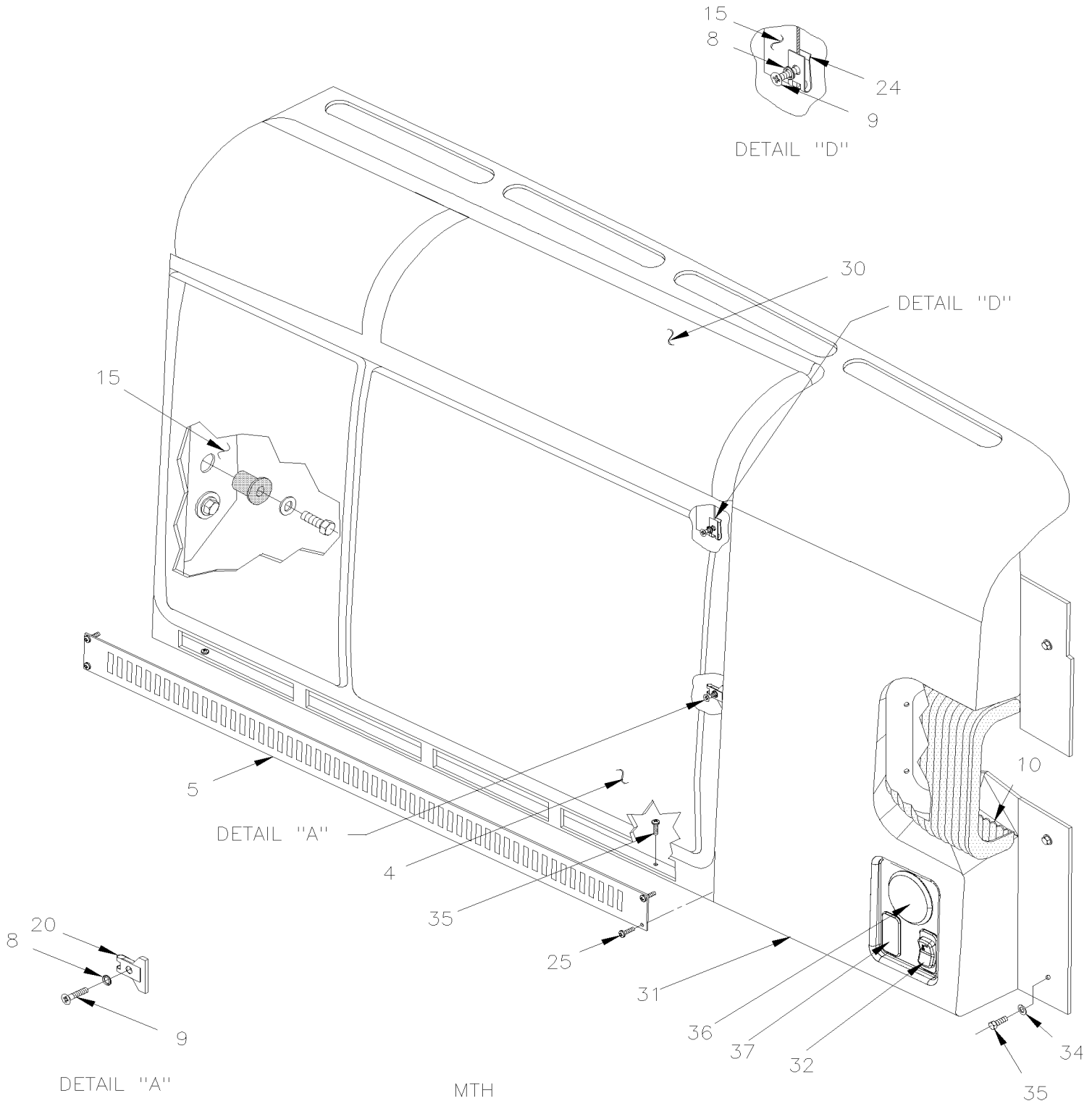

From Y-7046 To 8-9339		Date:07/2024	PAGE:Y2-1806-20
DASHBOARD PANEL			

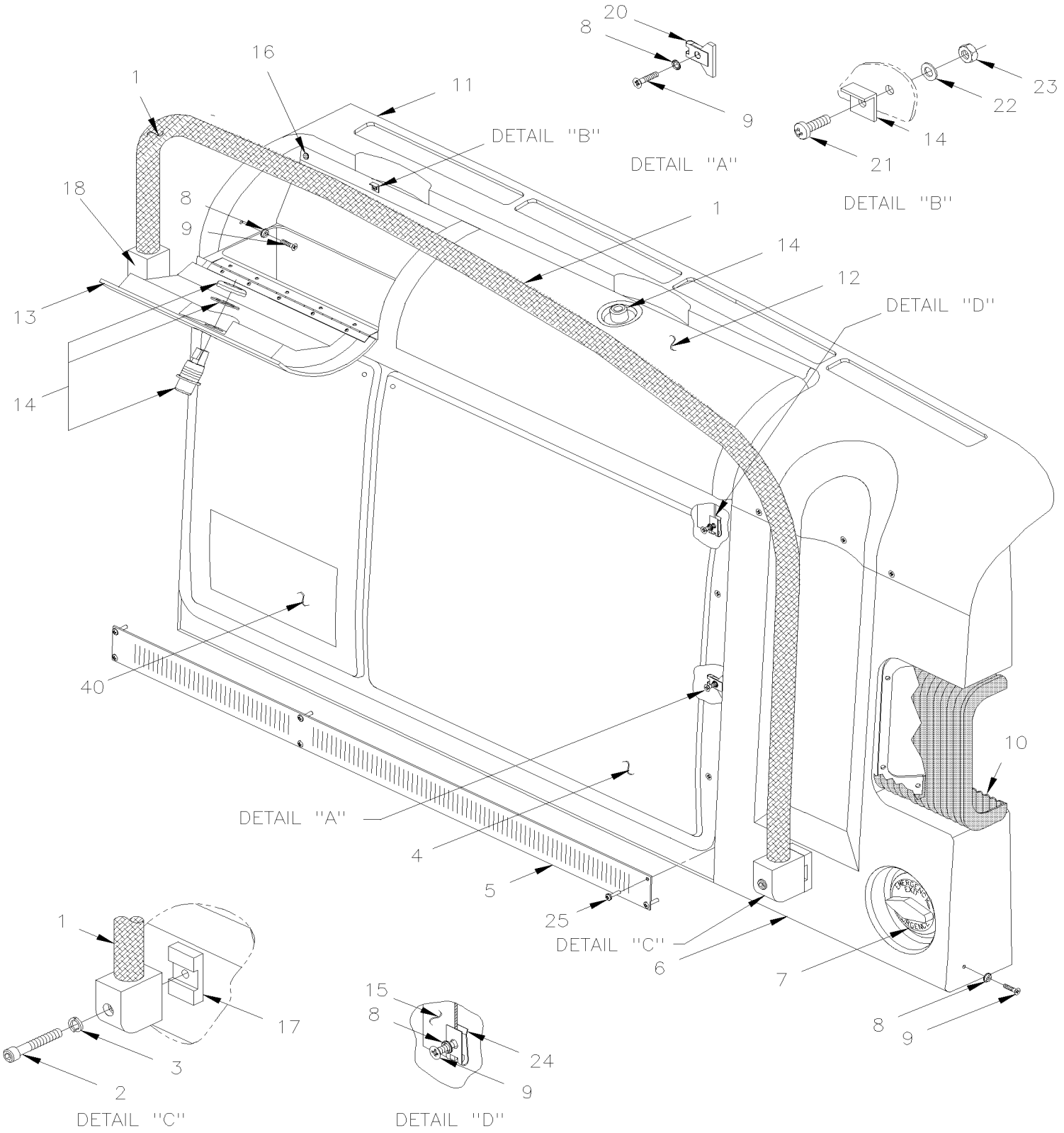

From Y-7046 To 8-9339		Date:07/2024	PAGE:Y2-1806-20

DASHBOARD PANEL

Item#	Part	Description	XLII 45	XLII MTH40	XLII MTH45	XLII MTH45E	NOTES
1	391971	HAND RAIL To 5-8422	1				
1	392266	HAND RAIL / BLACK From 5-8423	1				C
1	**3202061**	**KIT SERVICE METAL BLACK RAMP DASHBOARD**	1				
1	392494	HAND RAIL / YELLOW From 5-8423	1				D
1	**3202030**	**KIT SERVICE METAL YELLOW RAMP DASHBOARD**	1				
2	5001379	SCREW CAP HEXS M8-1.25x50 SS To 5-8422	1				
2	5001598	SCREW CAP HEXS M8-1.25x30 SS From 5-8423	1				
3	5001380	SCREW CAP HEXS M8-1.25x100 SS	2				
4	392007	PANEL / SERVICING	1				
5	392194	GRILLE / LOWER	1	1	1	1	
6	392120	COVER / ENTRANCE DOOR MECHANISM	1				
7	**Y2-1802-00**	**ENTRANCE DOOR CONTROL**					
8	500345	WASHER FN CKF .187x.500x.090 BR BK	AR	AR	AR	AR	
9	5001413	SCREW MA FL PH M4-0.7x20 Z050	AR	AR	AR	AR	
9	5001429	SCREW MA FL PH M4-0.7x25 BK	AR	AR	AR	AR	
10	**Y2-1862-60**	**ENTRANCE DOOR FRAME - INSTALLATION**	1	1	1	1	
11	392117	PANEL R.H. / TOP W/2 BOX	1				
11	392121	PANEL R.H. / TOP W/O BOX	1				
11	392052	PANEL R.H. / TOP W/2 BOX		1	1	1	
11	392146	PANEL R.H. / TOP W/2 BOX MTH 89"				1	
12	391954	COVER R.H. / BLACK	1	1	1	1	
13	391955	COVER L.H. / BLACK	1	1	1	1	
13	504676	STRAP RETAINER	1	1	1	1	
14	504672	LATCH ASSY W/2 KEYS	AR	AR	AR	AR	
. NS	810084	. KEY / (CH751)	1	1	1	1	
NS	810084	. KEY / (CH751)	2	2	2	2	
15	392054	STRUCTURE / R.H.	1	1	1	1	B
. NS	392018	. STRAP R.H. / TO FIX DUCT TO STRUCTURE	1	1	1	1	B
. NS	392017	. SUPPORT / R.H. WINDSHIELD	1	1	1	1	B
. NS	392019	. STRAP L.H. / TO FIX DUCT TO STRUCTURE	1	1	1	1	B
15	392176	STRUCTURE / R.H.		1	1		A
15	392148	STRUCTURE / R.H. MTH 89"				1	
16	504674	BUMPER RUBBER / 1/4X13/32X13/32X1/8	4	4	4	4	
17	392489	RAMP BLOCK SUPPORT WELD TO DASH STRUCTURE	1	1	1	1	
18	392116	RAMP SUPPORT WELD TO DASH STRUCTURE	1	1	1	1	
20	5001406	NUT SPR U M4-0.7 0.8-4.0x13.5	4	4	4	4	
21	5001398	SCREW MA CHE PH M3-0.5x10 SS	1	1	1	1	
22	N.P.N.	WASHER	4	4	4	4	4
23	5001408	NUT HEX STO M3-0.5 ZP	4	4	4	4	
24	5001405	NUT SPR U M4-0.7 0.8-4.0x9.5	14	14	14	14	
25	5001410	SCREW MA CHE PH M4-0.7x16 SS	6	6	6	6	
30	392052	PANEL R.H. / TOP W/2 BOX		1	1	1	

From Y-7046 To 8-9339		Date:07/2024	PAGE:Y2-1806-20

DASHBOARD PANEL

Item#	Part	Description	XLII 45	XLII MTH40	XLII MTH45	XLII MTH45E	NOTES
30	392053	PANEL R.H. / TOP W/O BOX		1	1	1	
30	392146	PANEL R.H. / TOP W/2 BOX MTH 89"				1	
30	392147	PANEL R.H. / TOP W/O BOX MTH 89"				1	
31	392133	COVER / ENTRANCE DOOR MECHANISM / MTH 89"				1	
31	392132	COVER / ENTRANCE DOOR MECHANISM / MTH 83"		1	1		
31	392050	COVER / ENTRANCE DOOR MECHANISM / MTH 86" To 2-7864		1	1		
31	392222	COVER / ENTRANCE DOOR MECHANISM / MTH 86" From 2-7865		1	1	1	
31	392178	COVER / ENTRANCE DOOR MECHANISM / MTH 83"		1	1		A
31	392177	COVER / ENTRANCE DOOR MECHANISM / MTH 86" To 2-7864		1	1		A
31	392224	COVER / ENTRANCE DOOR MECHANISM / MTH 86" From 2-7865		1	1	1	A
32	562697	SWITCH / ON-ON / D.P.D.T. / CH-OVER / W/RED & GREEN LED		1	1	1	
NS	562716	CAP / DRIVER'S LAMP		1	1	1	
33	500923	SCREW TC CAP HEX 1/4-20x3/4 Z050	AR	AR	AR	AR	
34	502582	WASHER LO SERR 6.1x16.2x0.9 Z050	AR	AR	AR	AR	
35	500641	SCREW TP PAN PH #8x3/4 Z050	AR	AR	AR	AR	
36	871315	LOUVER, ADJUSTABLE / ROUND 2 1/8" O.D. From 2-7865		1	1	1	
36	871314	LOUVER, ADJUSTABLE / ROUND 2 5/8" O.D. From 2-7865		1	1	1	A
NS	392134	HOSE 3" I.D. X 900MM From 2-7865		1	1	1	
37	562773	SWITCH / "DUMMY" / PLUG		1	1	1	
40	404625	DECAL "POUR LA SECURITE… BLANCHE" / ASM FRANÇAIS	1				
. NS	404623	. DECAL "POUR LA SECURITE… BLANCHE" FRANÇAIS	1				
. NS	404624	. PLATE SUPPORT DECAL 232MM x 119MM	1				
40	404626	DECAL "FOR PASSENGER SAFETY....WHITE" / ASSY / ENGLISH	1				
. NS	404622	. DECAL "FOR PASSENGER SAFETY....WHITE" / ENGLISH	1				
. NS	404624	. PLATE SUPPORT DECAL 232MM x 119MM	1				
40	406150	DECAL "FOR PASSENGER SAFETY....WHITE" / ASSY / ENGLISH & SPANISH	1				
. NS	405647	. DECAL "FOR PASSENGER SAFETY....WHITE" / ASSY / ENGLISH & SPANISH	1				
. NS	406148	. PLATE SUPPORT DECAL 242MM x 290MM	1				
40	400099	DECAL "FOR PASSENGER SAFETY....YELLOW" / ASSY / ENGLISH & SPANISH	1				
. NS	400098	. DECAL "FOR PASSENGER SAFETY....YELLOW" / / ENGLISH & SPANISH	1				
. NS	406148	. PLATE SUPPORT DECAL 242MM x 290MM	1				
		A) USE WITHOUT HANDRAIL					
		B) WITH HANDRAIL					
		C) FOR SOLUTION IN SERVICE, SEE SERVICE KIT 3202061					
		D) FOR SOLUTION IN SERVICE, SEE SERVICE KIT 3202030					
		4) NO PARTS NUMBER					

From Y-7046 To 8-9339		Date:07/2024	PAGE:3202061
KIT SERVICE METAL BLACK RAMP DASHBOARD			

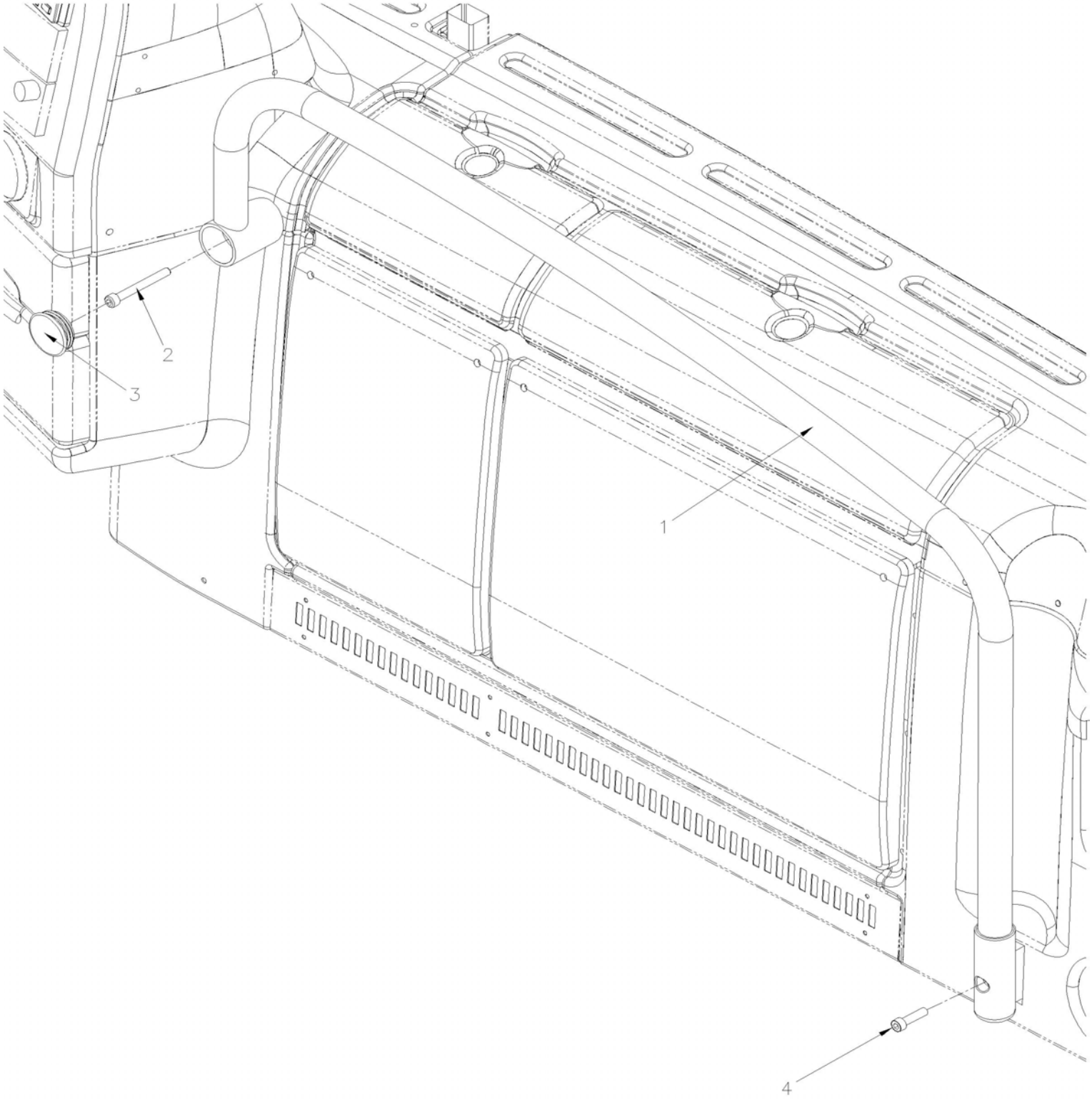

From Y-7046 To 8-9339		Date:07/2024	PAGE:3202061

KIT SERVICE METAL BLACK RAMP DASHBOARD

Item#	Part	Description	XLII 45	XLII MTH40	XLII MTH45	XLII MTH45E	NOTES
1	3202048	METAL HANDRAIL BLACK DASHBOARD	1	1	1	1	
2	5001604	SCREW CAP HEXS M8-1.25x70 G8.8 G500	1	1	1	1	
3	504513	PLUG BUTTON / 1.9 X 0.58 POL BK	1	1	1	1	
4	5001598	SCREW CAP HEXS M8-1.25x30 SS	1	1	1	1	

From Y-7046 To 8-9339		Date:07/2024	PAGE:3202030
KIT SERVICE METAL YELLOW RAMP DASHBOARD			

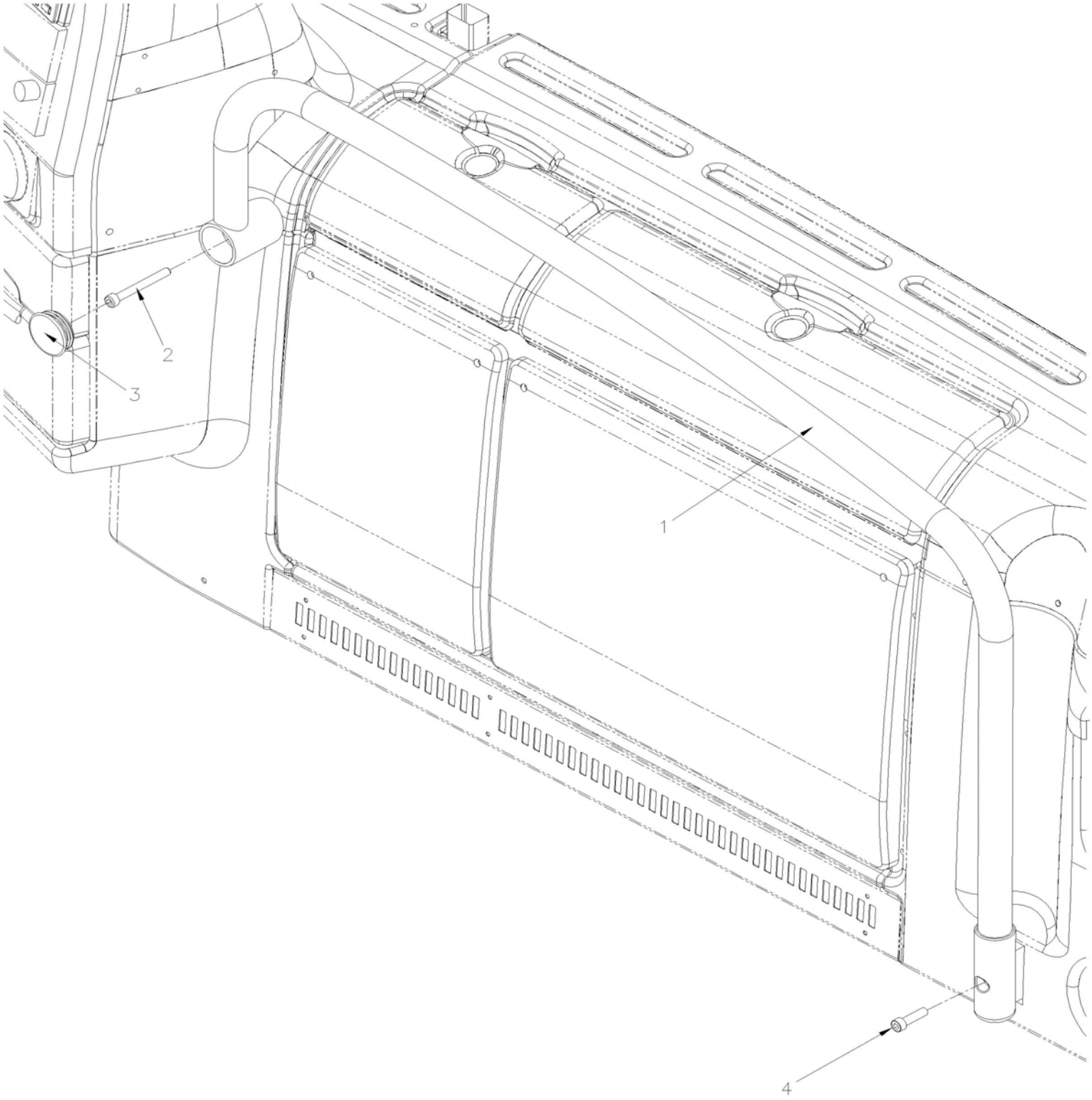

From Y-7046 To 8-9339		Date:07/2024	PAGE:3202030

KIT SERVICE METAL YELLOW RAMP DASHBOARD

Item#	Part	Description	XLII 45	XLII MTH40	XLII MTH45	XLII MTH45E	NOTES
1	3211769	METAL HANDRAIL YELLOW DASHBOARD	1	1	1	1	
2	5001604	SCREW CAP HEXS M8-1.25x70 G8.8 G500	1	1	1	1	
3	504513	PLUG BUTTON / 1.9 X 0.58 POL BK	1	1	1	1	
4	5001598	SCREW CAP HEXS M8-1.25x30 SS	1	1	1	1	

		Date:07/2024	PAGE:Y2-1806-50
L.H. CONSOLE - MTH			

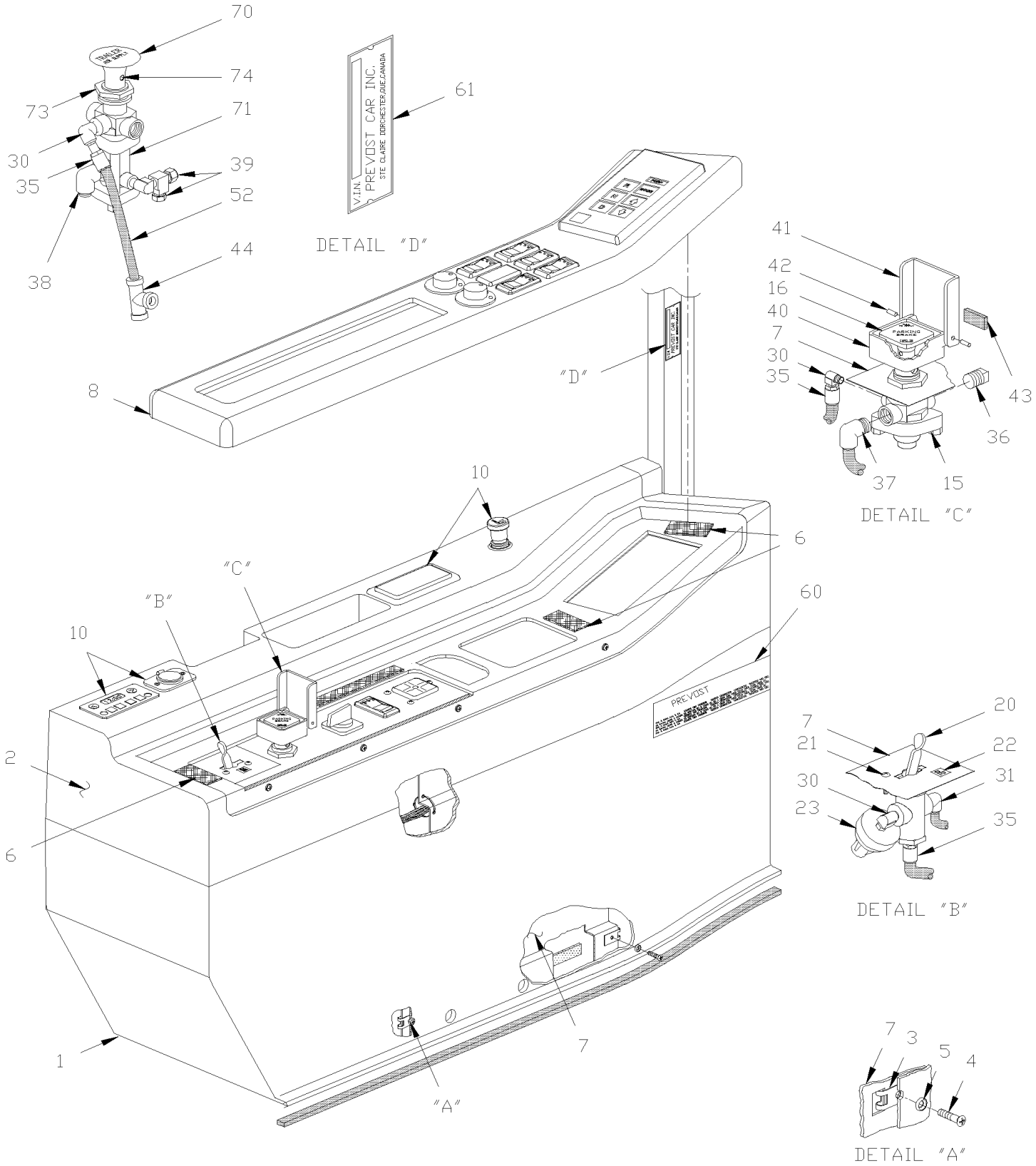

		Date:07/2024	PAGE:Y2-1806-50

L.H. CONSOLE - MTH

Item#	Part	Description	XLII 45	XLII MTH40	XLII MTH45	XLII MTH45E	NOTES
1	392042	CONSOLE / LOWER		1	1	1	
2	392037	CONSOLE / UPPER		1	1	1	
3	5001405	NUT SPR U M4-0.7 0.8-4.0x9.5		10	10	10	
4	5001414	SCREW MA FL PH M4-0.7x16 BK		10	10	10	
5	500345	WASHER FN CKF .187x.500x.090 BR BK		10	10	10	
6	506493	TAPE DUAL LOCK 1/2" x 150' / BLACK SJ3541		AR	AR	AR	
7	392039	STRUCTURE ASSY		1	1	1	
8	392038	PANEL / W/AUTOMATIC TRANSMISSION		1	1	1	
10	**Y2-0645-05**	**SWITCHES L.H. CONSOLE - MTH**					
10	392043	DUMMY PLUG LIGHTER		1	1	1	
15	641128	VALVE, CONTROL VALVE PP-1 / 40PSI		1	1	1	
. NS	641154	. REPAIR KIT / PP-1 & RD-3		1	1	1	
16	641149	. BUTTON, PARKING BRAKE DIAMOND YELLOW / 1"		1	1	1	
20	640136	VALVE, CONTROL TW-1		1	1	1	
. NS	641156	. REPAIR KIT / TW-1		1	1	1	
21	500572	SCREW MA TR PH #10-24x1/2 SS BK		2	2	2	
22	391992	DECAL "TAG"		1	1	1	
23	562518	PRESSURE SWITCH N.O. 4PSI / 1/8NPT W/2 SCREWS / TAG		1	1	1	
24	391994	DECAL "LEVEL LOW"		1	1	1	
30	501331	STREET ELBOW 90º / PIPE FITTING / 1/8NPT-Mx1/8NPT-F BR		3	3	3	
31	641369	MALE ELBOW 90° NON-SWIVEL / PUSH-IN FITTING / #4x1/8NPT-M BR		3	3	3	
35	641349	MALE CONNECTOR / PUSH-IN FITTING / #6x1/8NPT-M BR		1	1	1	
36	501304	PLUG SQUARE HEAD / PIPE FITTING / 1/4NPT-M BR		1	1	1	
37	641371	MALE ELBOW 90° NON-SWIVEL / PUSH-IN FITTING / #4x1/4NPT-M BR		1	1	1	
38	641372	MALE ELBOW 90° NON-SWIVEL / PUSH-IN FITTING / #6x1/4NPT-M BR		1	1	1	
39	641002	MALE RUN TEE / NTA FITTING / #4x#4x1/8NPT-M BR		1	1	1	
40	391727	PROTECTOR BOX ASSY / OVER PARKING BRAKE VALVE		1	1	1	
40	391725	. BOX		1	1	1	
41	391726	. COVER / CLEAR PLASTIC		1	1	1	
42	505221	. SPRING, PIN 1/8 X 3/8		1	1	1	
43	506035	. TAPE RUB ADH1 NEO 1/2" x 1" x 15' / BLACK 1220X		1	1	1	
44	641922	UNION TEE / PUSH-IN FITTING / #6x#6x#6 BR		1	1	1	
52	**Y2-1202-00**	**TUBES PLASTIC / AIR D.O.T.**					
60	Call order desk	PLATE / V.I.N. / W/IND. SUSPENSION FRONT		1	1	1	P
61	Call order desk	PLATE / V.I.N.		1	1	1	P
NS	504107	RIVET POP DOME OE 1/8x5/16 AL		6	6	6	
70	641935	BUTTON RED / FOR TRAILER VALVE PP-7		1	1	1	
71	641397	TRAILER SUPPLY VALVE PP-7		1	1	1	
NS	452043	PRESSURE SWITCH N.O. 60-35 20SP001AA060E035E		1	1	1	
73	640297	NUT		1	1	1	
74	640286	PIN ROLLER		1	1	1	

		Date:07/2024	PAGE:Y2-1806-50

L.H. CONSOLE - MTH

Item#	Part	Description	XLII 45	XLII MTH40	XLII MTH45	XLII MTH45E	NOTES
		P) CALL ORDER DESK FOR SPECIFIC APPLICATION (V.I.N.)					

From Y-7046 To 6-8906		Date:07/2024	PAGE:Y2-1810-00
MODESTY PANEL R.H.			

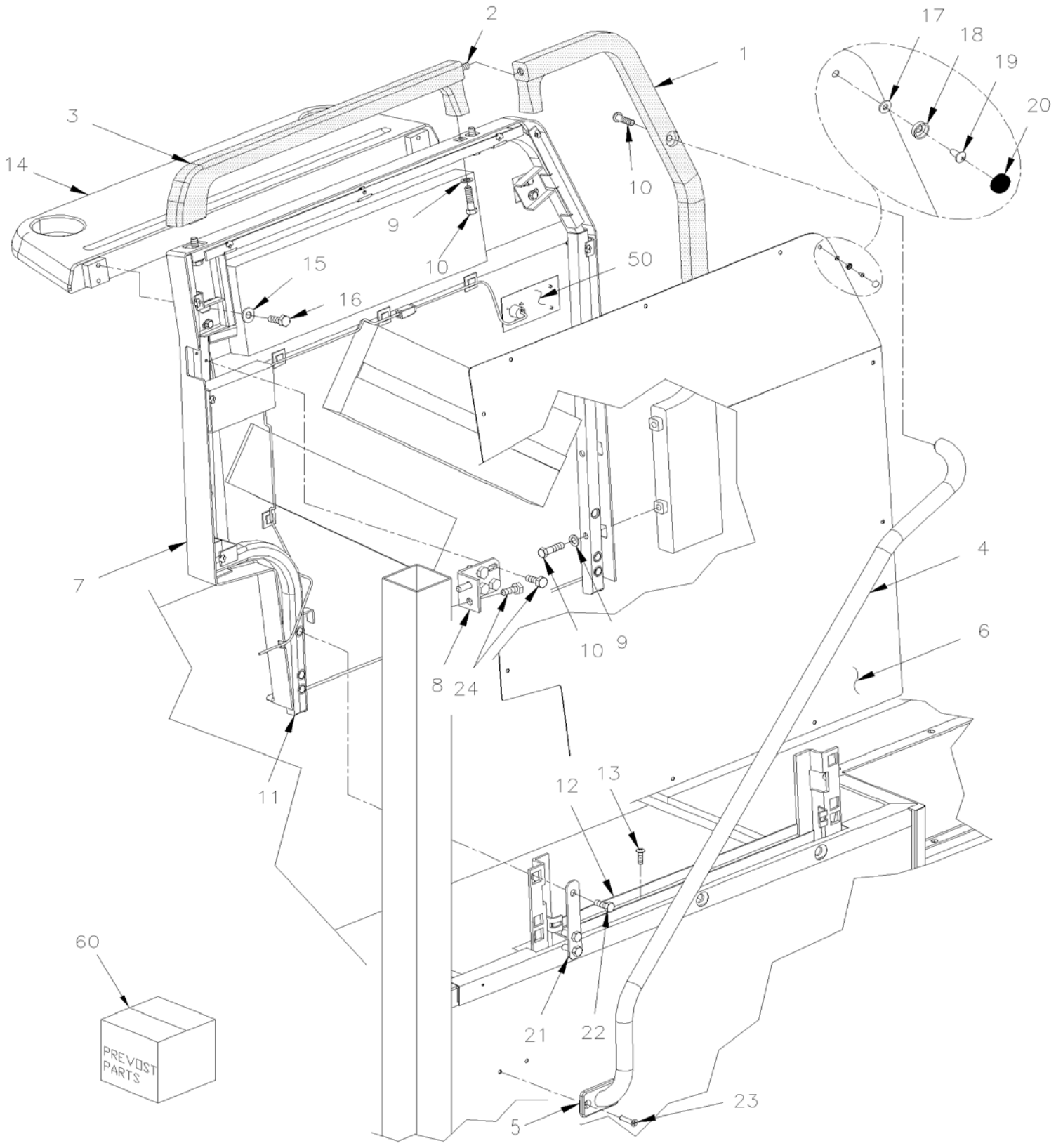

From Y-7046 To 6-8906		Date:07/2024	PAGE:Y2-1810-00

MODESTY PANEL R.H.

Item#	Part	Description	XLII 45	XLII MTH40	XLII MTH45	XLII MTH45E	NOTES
	327189	MODESTY PANEL R.H. ASSY WITH BLACK HANDRAIL	1				
	327188	MODESTY PANEL R.H. ASSY WITH BLACK HANDRAIL	1				A
	327248	MODESTY PANEL R.H. ASSY WITH BLACK HANDRAIL	1				B
	327247	MODESTY PANEL R.H. ASSY WITH BLACK HANDRAIL	1				
1	327197	HANDLE R.H.	1				D E
1	327250	HANDLE R.H.	1				B
2	5001513	SCREW CAP BUT HEXS 3/8x1 1/2 SS	1				
3	327196	HANDLE TOP	1				D E
4	327193	HANDRAIL CURBSIDE / BLACK	1				D
4	3200538	HANDRAIL CURBSIDE / YELLOW	1				E
4	327365	HANDRAIL CURBSIDE / BLACK	1				B
5	327253	PLATE WALL CONNECTOR	1				
6	327260P	PANEL FRONT ASSY W/COVERING	1				
6	327261	. ALUMINUM PANEL	1				
NS	326962P	COVERING MODESTY PANEL "TISSUS" W/"LOGO" / EMBROIDERED	AR				
7	327200	PANEL REAR / PLASTIC	1				
7	327199	PANEL REAR / PLASTIC	1				A
NS	500803	NUT SPR J #10A .035-.050	9				
8	327321	ANGLE	1				
9	502510	WASHER FL .375x.875x.083	5				
10	500193	SCREW CAP HEX 3/8-16x1 1/2 G5 Z050	5				
11	327195	STRUCTURE ASSY R.H. MODESTY	1				
12	327353	CHANNEL 520MM	1				
13	500642	SCREW TP PAN PH #10x3/4 Z050	4				
14	327198	SHELF	1				
15	500440	WASHER FL .250x.562x.065 Z050	9				
16	500316	SCREW MA FL PH 1/4-28x3/4 SS	4				
17	500438	WASHER FL .187x.437x.050 Z050	4				
18	504399	WASHER RETAINER SNAP CAP #10	AR				
19	500613	SCREW TP PAN PH #10x1/2 Z050	AR				
20	504400	SNAP CAP #10 FINISHING BLACK	AR				
21	327478	PLATE RETAINER	AR				
22	500191	SCREW CAP HEX 3/8-16x1 G5 Z050	6				
23	502748	SCREW TP FL PH #14x1 1/4 EMN	2				
24	500923	SCREW TC CAP HEX 1/4-20x3/4 Z050	4				
50	**Y2-2315-00**	**SOUND SYSTEM & ACCESSORIES - "R.E.I."**					
NS	320939	CUSHION PAD / 3" X 23" / KNEE GUARD	1				C
NS	500641	SCREW TP PAN PH #8x3/4 Z050	6				C
NS	500989	WASHER FL .219x.875x.062 Z050	6				
60	**3202060**	**KIT SERV BLACK METAL RAMP MOD PAN RH X**	1				
60	**3202028**	**KIT SERV YELLOW METAL RAMP MOD PAN RH X**	1				

From Y-7046 To 6-8906		Date:07/2024	PAGE:Y2-1810-00

MODESTY PANEL R.H.

Item#	Part	Description	XLII 45	XLII MTH40	XLII MTH45	XLII MTH45E	NOTES
		A) TO USE WITH SHELF					
		B) TO USE WITH HOSTESS SEAT					
		C) WITH "OPTION"					
		D) FOR SOLUTION IN SERVICE, SEE SERVICE KIT 3202060					
		E) FOR SOLUTION IN SERVICE, SEE SERVICE KIT 3202028					

From Y-7046 To 6-8906		Date:07/2024	PAGE:3202060
KIT SERV BLACK METAL RAMP MOD PAN RH X			

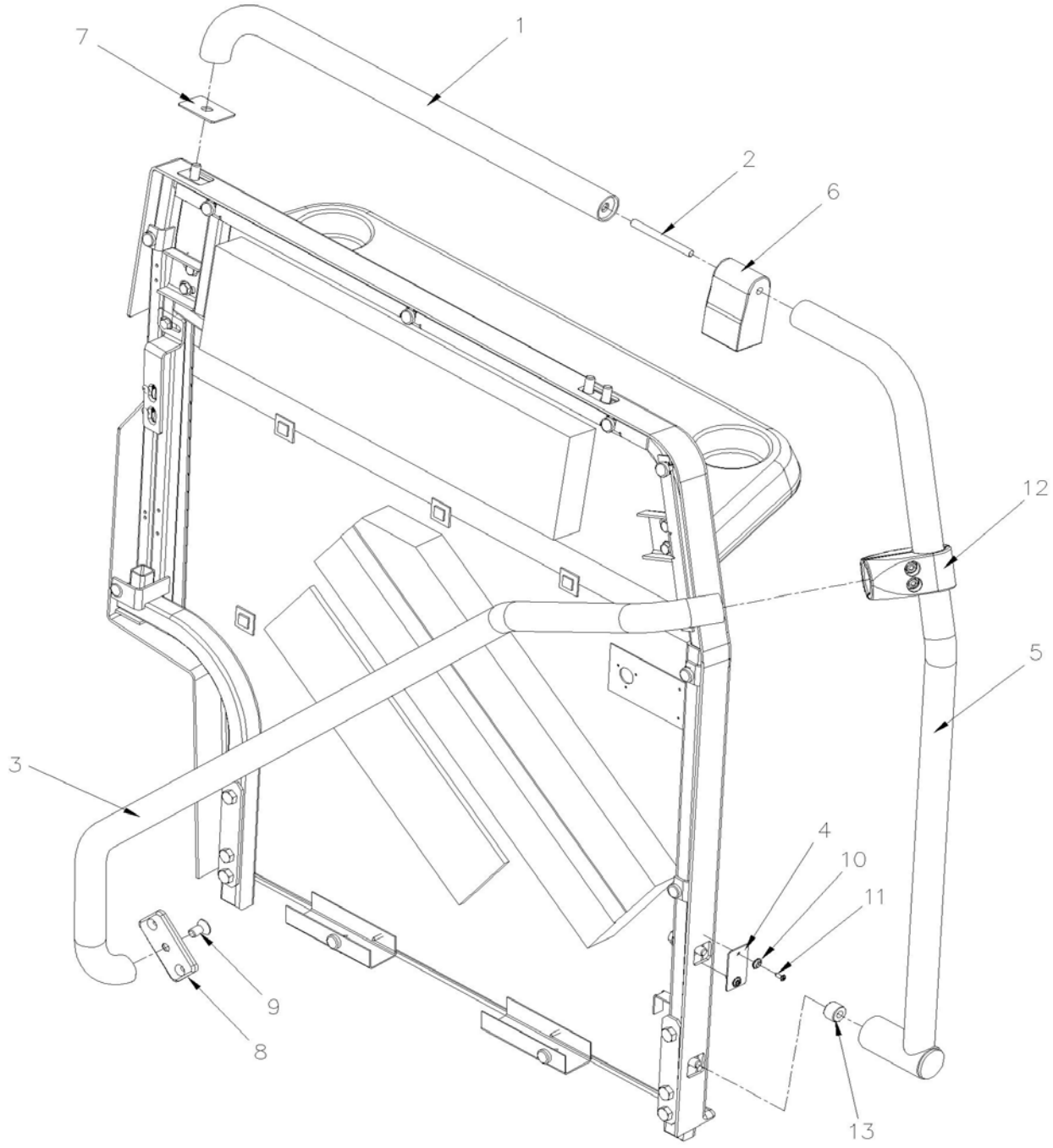

From Y-7046 To 6-8906		Date:07/2024	PAGE:3202060

KIT SERV BLACK METAL RAMP MOD PAN RH X

Item#	Part	Description	XLII 45	XLII MTH40	XLII MTH45	XLII MTH45E	NOTES
1	3201720	METAL HANDRAIL UPPER BLACK	1	1	1	1	
2	3201977	SHAFT,THREADED	1	1	1	1	
3	3202047	METAL HANDRAIL ENTRANCE BLACK	1	1	1	1	
4	3210725	COVER METAL HANDRAIL	1	1	1	1	
5	3211762	METAL HANDRAIL RH BLACK	1	1	1	1	
6	3211766	METAL HANDRAIL ANCH. MOD. PAN	1	1	1	1	
7	3211767	COVER METAL HANDRAIL	1	1	1	1	
8	327253	PLATE WALL CONNECTOR	1	1	1	1	
9	5001574	SCREW CAP FL HEXS 3/8-16x3/4	1	1	1	1	
10	500463	WASHER FN CKF .187x.500x.090 BR Z050	2	2	2	2	
11	500417	SCREW TP PAN PH #6x3/8 Z050	2	2	2	2	
12	820619	FITTING 1 1/4" T	1	1	1	1	
13	2810628	SPACER M8	1	1	1	1	

From Y-7046 To 6-8906		Date:07/2024	PAGE:3202028
KIT SERV YELLOW METAL RAMP MOD PAN RH X			

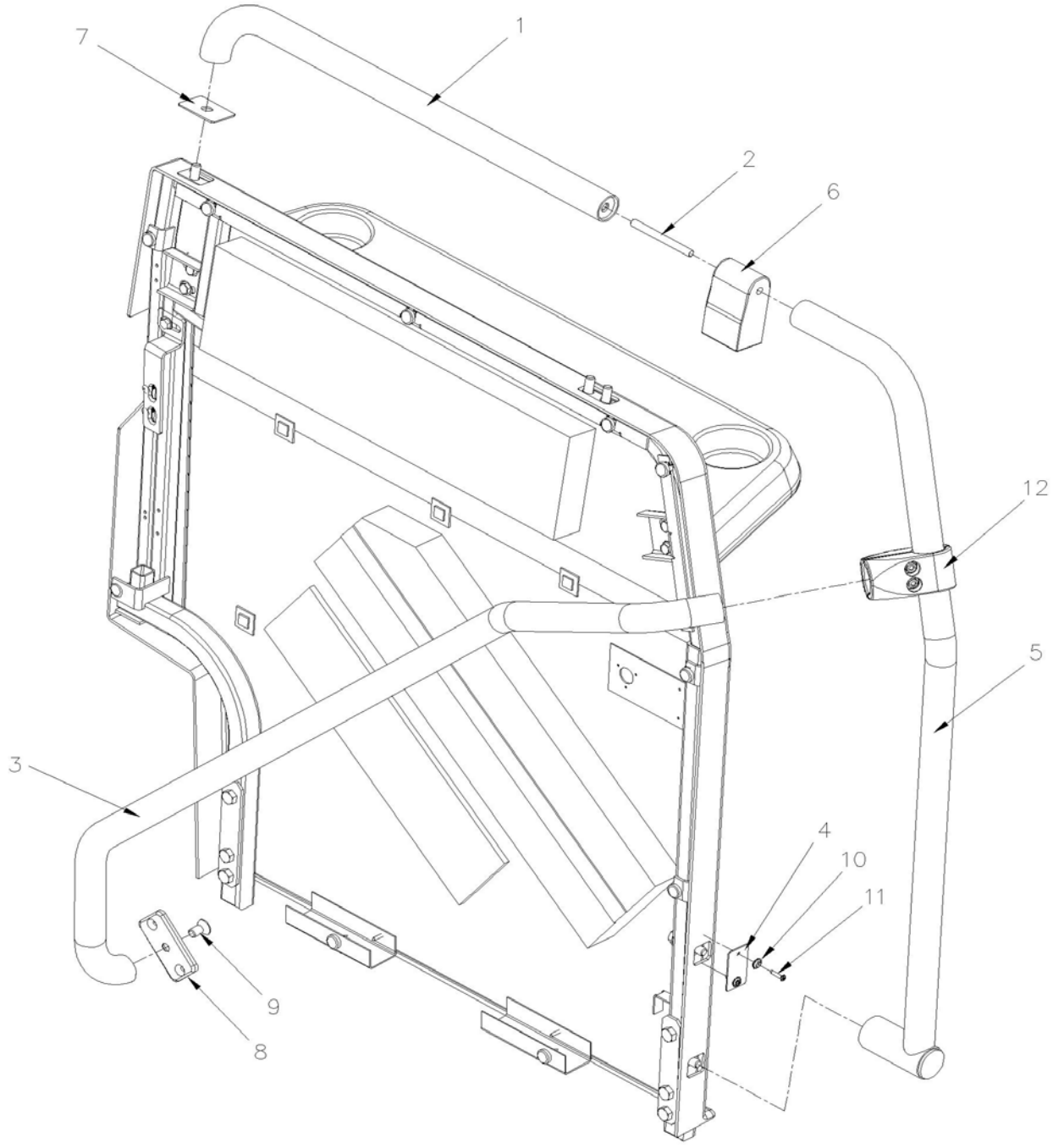

From Y-7046 To 6-8906		Date:07/2024	PAGE:3202028

KIT SERV YELLOW METAL RAMP MOD PAN RH X

Item#	Part	Description	XLII 45	XLII MTH40	XLII MTH45	XLII MTH45E	NOTES
1	3201720	METAL HANDRAIL UPPER BLACK	1	1	1	1	
2	3201977	SHAFT,THREADED	1	1	1	1	
3	3201717	METAL HANDRAIL ENTRANCE YELLOW	1	1	1	1	
4	3210725	COVER METAL HANDRAIL	1	1	1	1	
5	3211762	METAL HANDRAIL RH BLACK	1	1	1	1	
6	3211766	METAL HANDRAIL ANCH. MOD. PAN	1	1	1	1	
7	3211767	COVER METAL HANDRAIL	1	1	1	1	
8	327253	PLATE WALL CONNECTOR	1	1	1	1	
9	5001574	SCREW CAP FL HEXS 3/8-16x3/4	1	1	1	1	
10	500463	WASHER FN CKF .187x.500x.090 BR Z050	2	2	2	2	
11	500417	SCREW TP PAN PH #6x3/8 Z050	2	2	2	2	
12	820619	FITTING 1 1/4" T	1	1	1	1	
13	2810628	SPACER M8	1	1	1	1	

From Y-7046 To 6-8906		Date:07/2024	PAGE:Y2-1811-00
MODESTY PLEXIGLASS			

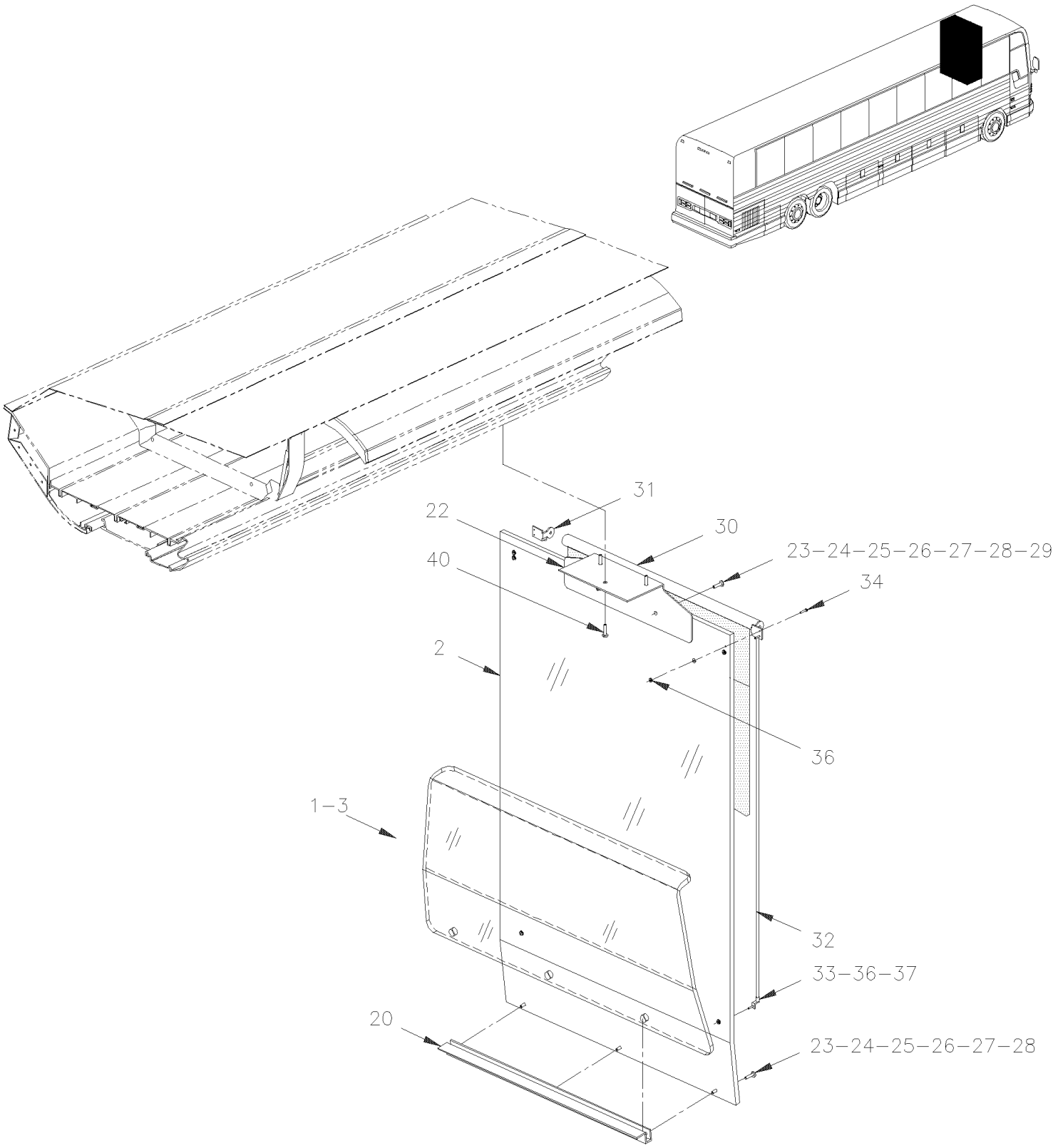

From Y-7046 To 6-8906		Date:07/2024	PAGE:Y2-1811-00

MODESTY PLEXIGLASS

Item#	Part	Description	XLII 45	XLII MTH40	XLII MTH45	XLII MTH45E	NOTES
1	328925	PLEXIGLASS / TINTED STREETSIDE / (233MM APROX)	1				
1	326286	PLEXIGLASS / CLEAR STREETSIDE / (233MM APROX)	1				
2	327359	PLEXIGLASS / CLEAR STREETSIDE / (831MM APROX)	1				
2	327358	PLEXIGLASS / TINTED STREETSIDE / (831MM APROX)	1				
3	328852	PLEXIGLASS / CLEAR CURBSIDE / (333MM APROX)	1				
3	320133	PLEXIGLASS / CLEAR CURBSIDE / (233MM APROX)	1				
3	328926	PLEXIGLASS / TINTED CURBSIDE / (233MM APROX)	1				
10	500632	SCREW TP OV PH #8x1 1/2 Z050	7				
13	5001168	BUMPER RUBBER / .750 OD x .562 TH x .187 HOLE	4				
20	**Y2-1810-00**	**MODESTY PANEL R.H.**					
20	**Y2-1812-00**	**MODESTY PANEL L.H.**					
22	326355	BRACKET ANGLE	1				
22	320061	BRACKET ANGLE / LIGHT GREY / "OPTION"	2				O
22	506002	TAPE RUB ADH1 CC POL 3/16" x 1/2" x 40' / GREY 2520	AR				O
23	504399	WASHER RETAINER SNAP CAP #10	5				
24	504400	SNAP CAP #10 FINISHING BLACK	5				
25	900251	BUSHING, RUBBER	6				
26	400380	SPACER 5/16 O.D. x 17/32" x 18GA	5				
26	505539	SPACER 5/16 O.D. x 17/32" x 18GA	5				
27	500989	WASHER FL .219x.875x.062 Z050	5				
27	5001378	WASHER LO EXT 5.3x10x0.6 Z050	2				O
28	5001317	SCREW MA PAN PH #8-32x1 SS	5				
NS	500574	SCREW MA TR PH #10-24x1 1/4 SS	2				O
29	500764	NUT HEX #8-32 Z050	5				
NS	500891	NUT HEX CAP #10-24 Z050	2				O
30	900596	BLIND ROLLER / CHARCOAL / 600MM To 2-7768	1				
30	901042	BLIND ROLLER / CHARCOAL / 600MM From 2-7769	1				
31	900478	BEARING HOLDER / R.H. / BLACK CASTING	1				
32	401901	ROD, 26" / BACKWARD	2				
33	900476	ROD HOLDER 90° / BLACK PLASTIC 30MM C/L	2				
34	502666	SCREW MA FL PH #6-32x3/4 SS BK	2				
36	500689	NUT HEX #6-32 Z050	6				
37	5001303	SCREW MA BDG PH #6-32x1 ZP EMN	2				
40	500626	SCREW TP OV PH #8x3/4 Z050	2				
40	500463	WASHER FN CKF .187x.500x.090 BR Z050	2				
		O) LOCATED EACH SIDE OF PLEXIGLASS / "OPTION"					

From Y-7046 To 6-8906		Date:07/2024	PAGE:Y2-1812-00
MODESTY PANEL L.H.			

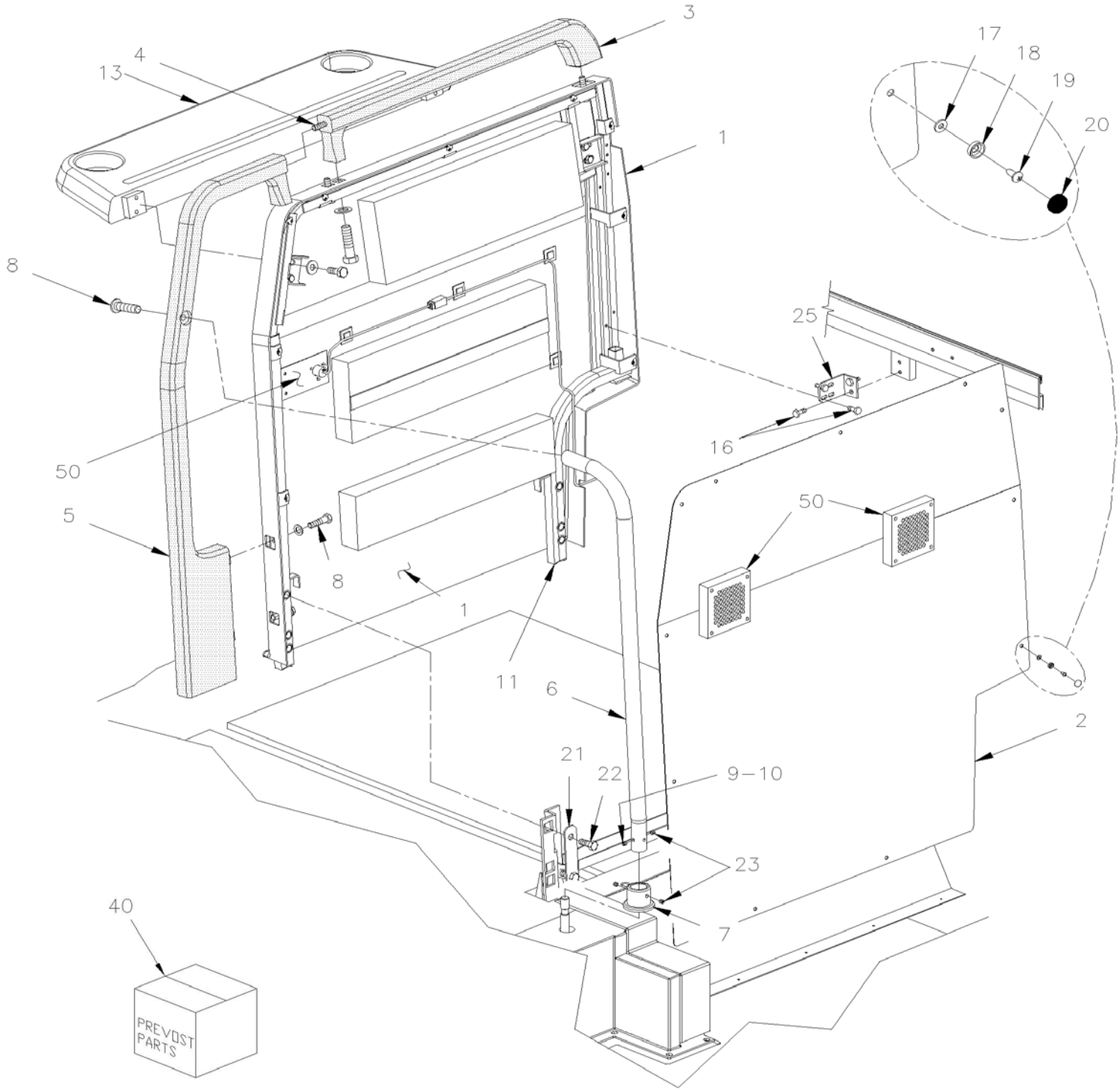

From Y-7046 To 6-8906		Date:07/2024	PAGE:Y2-1812-00

MODESTY PANEL L.H.

Item#	Part	Description	XLII 45	XLII MTH40	XLII MTH45	XLII MTH45E	NOTES
	327190	MODESTY PANEL R.H. ASSY	1				
	327191	MODESTY PANEL L.H. ASSY WITH BLACK HANDRAIL	1				
1	327205	PANEL REAR / PLASTIC	1				
1	327204	PANEL REAR / PLASTIC	1				A
1	327202	STRUCTURE ASSY L.H. MODESTY	1				
NS	500803	NUT SPR J #10A .035-.050	9				
2	Call order desk	PANEL FRONT ASSY W/COVERING S.C.C. / USE W/SPEAKER To 1-7428	1				P
2	328884P	PANEL FRONT ASSY W/COVERING S.C.C. / USE W/SPEAKER To 1-7428	1				B
2	327792P	PANEL FRONT ASSY W/COVERING S.C.C. From 1-7429	1				
2	327261	. ALUMINUM PANEL To 1-7428	1				
2	327225	. ALUMINUM PANEL / USE W/SPEAKER 92MM O.D. / UPPER PANEL From 1-7429	1				
2	327259	. ALUMINUM PANEL / W/OUT SPEAKER	1				
3	327196	HANDLE TOP	1				C D
4	5001513	SCREW CAP BUT HEXS 3/8x1 1/2 SS	1				
5	327203	HANDLE L.H.	1				C D
6	327194	HANDRAIL STREETSIDE / BLACK	1				C
6	3200535	HANDRAIL STREETSIDE / YELLOW	1				D
7	327254	COLLAR	1				
8	500193	SCREW CAP HEX 3/8-16x1 1/2 G5 Z050	5				
9	327353	CHANNEL 520MM	1				
10	500642	SCREW TP PAN PH #10x3/4 Z050	1				
11	327202	STRUCTURE ASSY L.H. MODESTY	1				
12	500923	SCREW TC CAP HEX 1/4-20x3/4 Z050	1				
13	327198	SHELF	1				
14	500440	WASHER FL .250x.562x.065 Z050	4				
15	500316	SCREW MA FL PH 1/4-28x3/4 SS	4				
16	500923	SCREW TC CAP HEX 1/4-20x3/4 Z050	4				
17	500438	WASHER FL .187x.437x.050 Z050	AR				
18	504399	WASHER RETAINER SNAP CAP #10	AR				
19	500613	SCREW TP PAN PH #10x1/2 Z050	AR				
20	504400	SNAP CAP #10 FINISHING BLACK	AR				
21	327478	PLATE RETAINER	1				
22	500191	SCREW CAP HEX 3/8-16x1 G5 Z050	3				
23	500306	. SCREW SET HEXS CUP 1/4-20x1/4	1				
25	327321	ANGLE	1				
40	**3202057**	**KIT SERV BLACK METAL RAMP MOD PAN LH X**	1				
40	**3202029**	**KIT SERV YELLOW METAL RAMP MOD PAN LH X**	1				
50	**Y2-2315-00**	**SOUND SYSTEM & ACCESSORIES - "R.E.I."**					

From Y-7046 To 6-8906		Date:07/2024	PAGE:Y2-1812-00

MODESTY PANEL L.H.

Item#	Part	Description	XLII 45	XLII MTH40	XLII MTH45	XLII MTH45E	NOTES
		A) TO USE WITH SHELF					
		B) SERVICE ONLY					
		C) FOR SOLUTION IN SERVICE, USE SERVICE KIT 3202057					
		D) FOR SOLUTION IN SERVICE, USE SERVICE KIT 3202029					
		P) CALL ORDER DESK FOR SPECIFIC APPLICATION (V.I.N.)					

From Y-7046 To 6-8906		Date:07/2024	PAGE:3202057
KIT SERV BLACK METAL RAMP MOD PAN LH X			

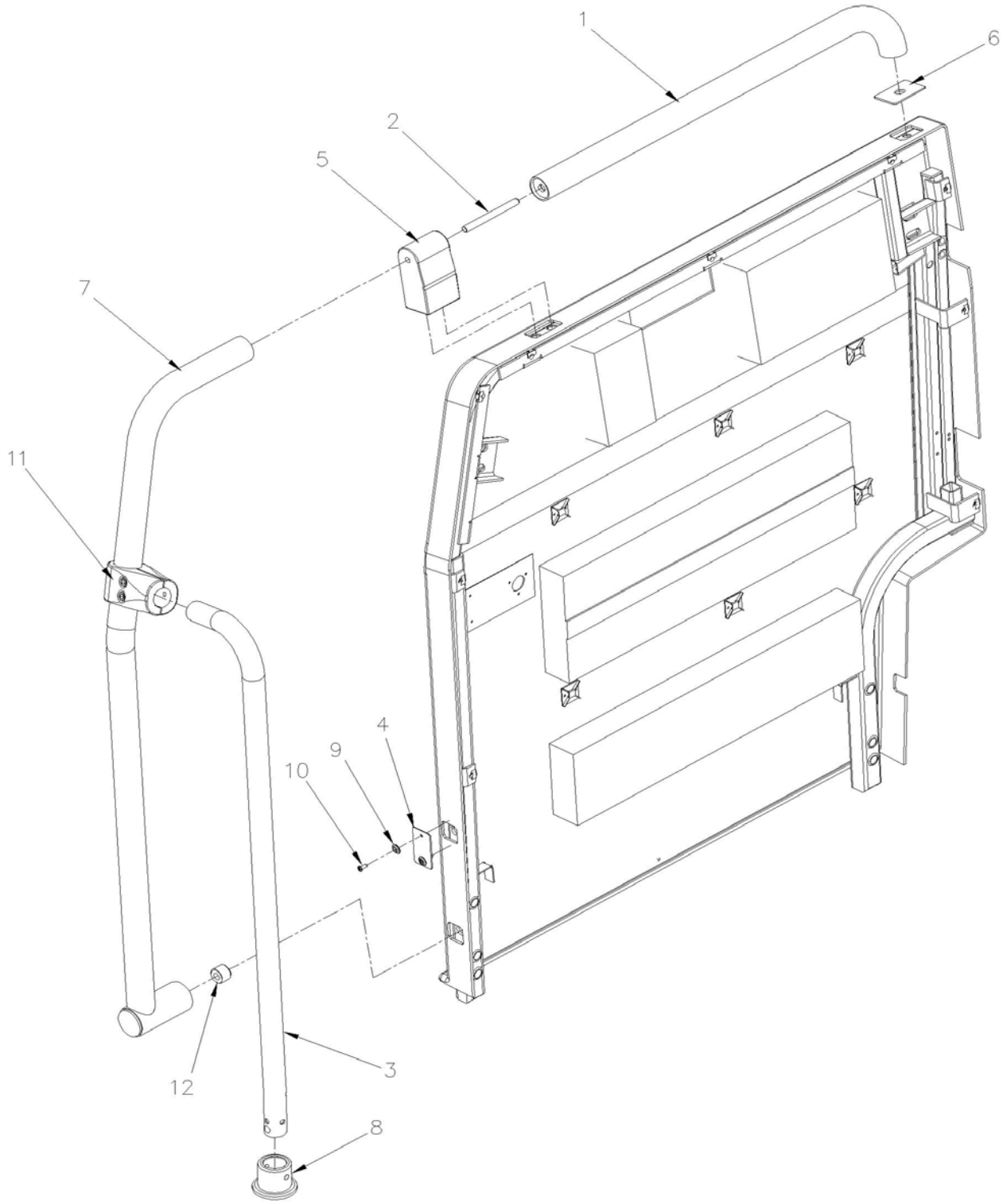

From Y-7046 To 6-8906		Date:07/2024	PAGE:3202057

KIT SERV BLACK METAL RAMP MOD PAN LH X

Item#	Part	Description	XLII 45	XLII MTH40	XLII MTH45	XLII MTH45E	NOTES
1	3201720	METAL HANDRAIL UPPER BLACK	1	1	1	1	
2	3201977	SHAFT,THREADED	1	1	1	1	
3	3202045	METAL HANDRAIL DRIVER BLACK	1	1	1	1	
4	3210725	COVER METAL HANDRAIL	1	1	1	1	
5	3211766	METAL HANDRAIL ANCH. MOD. PAN	1	1	1	1	
6	3211767	COVER METAL HANDRAIL	1	1	1	1	
7	3211772	METAL HANDRAIL LH BLACK	1	1	1	1	
8	327254	COLLAR	1	1	1	1	
9	500463	WASHER FN CKF .187x.500x.090 BR Z050	2	2	2	2	
10	500417	SCREW TP PAN PH #6x3/8 Z050	2	2	2	2	
11	820620	FITTING 1 1/4" X 1" T	1	1	1	1	
12	2810628	SPACER M8	1	1	1	1	

From Y-7046 To 6-8906		Date:07/2024	PAGE:3202029
KIT SERV YELLOW METAL RAMP MOD PAN LH X			

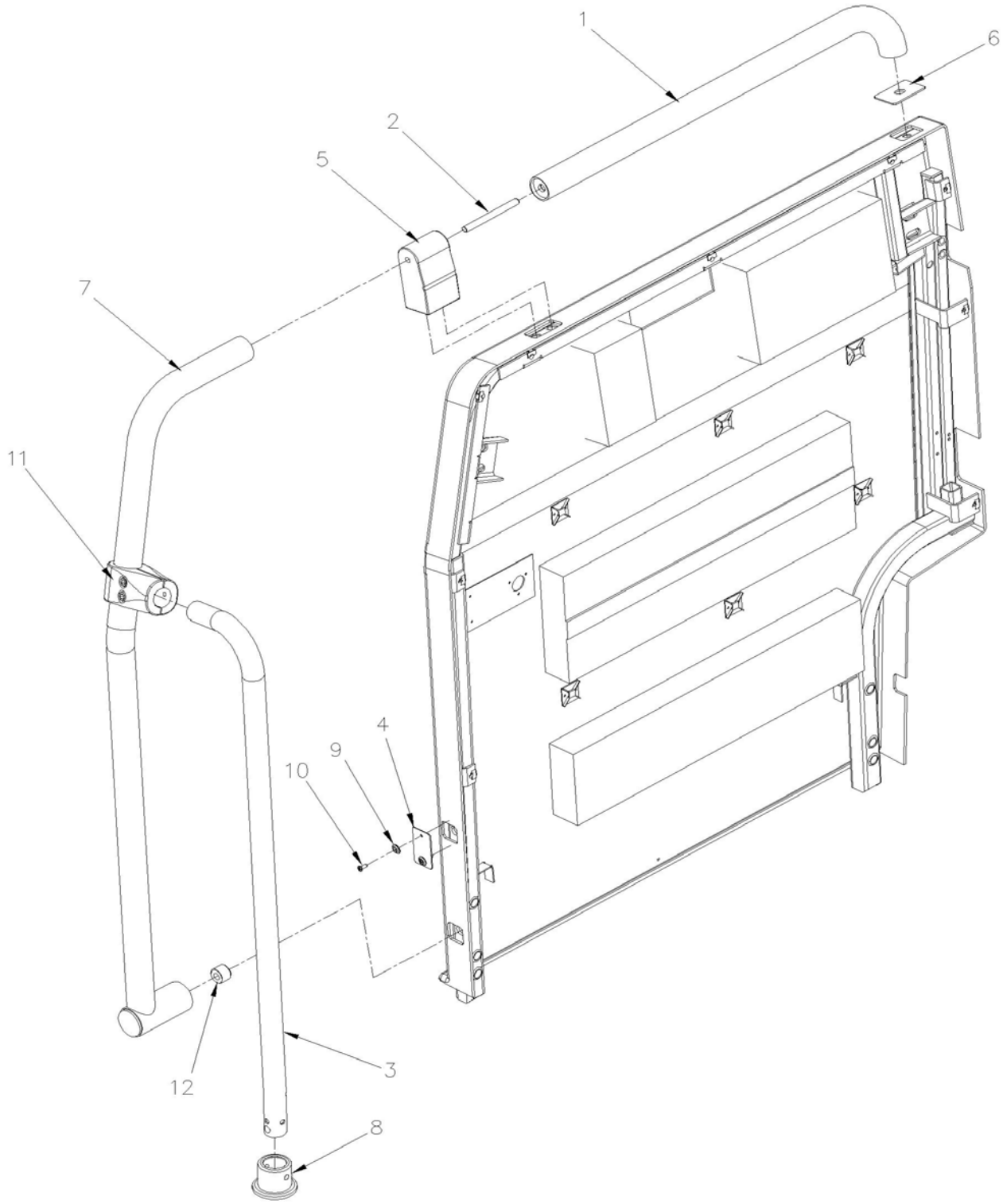

From Y-7046 To 6-8906		Date:07/2024	PAGE:3202029

KIT SERV YELLOW METAL RAMP MOD PAN LH X

Item#	Part	Description	XLII 45	XLII MTH40	XLII MTH45	XLII MTH45E	NOTES
1	3201720	METAL HANDRAIL UPPER BLACK	1	1	1	1	
2	3201977	SHAFT,THREADED	1	1	1	1	
3	3201726	METAL HANDRAIL DRIVER YELLOW	1	1	1	1	
4	3210725	COVER METAL HANDRAIL	1	1	1	1	
5	3211766	METAL HANDRAIL ANCH. MOD. PAN	1	1	1	1	
6	3211767	COVER METAL HANDRAIL	1	1	1	1	
7	3211772	METAL HANDRAIL LH BLACK	1	1	1	1	
8	327254	COLLAR	1	1	1	1	
9	500463	WASHER FN CKF .187x.500x.090 BR Z050	2	2	2	2	
10	500417	SCREW TP PAN PH #6x3/8 Z050	2	2	2	2	
11	820620	FITTING 1 1/4" X 1" T	1	1	1	1	
12	2810628	SPACER M8	1	1	1	1	

From Y-7046 To 6-8906		Date:07/2024	PAGE:Y2-1814-01
DESTINATION SIGN - ELECTRICAL			

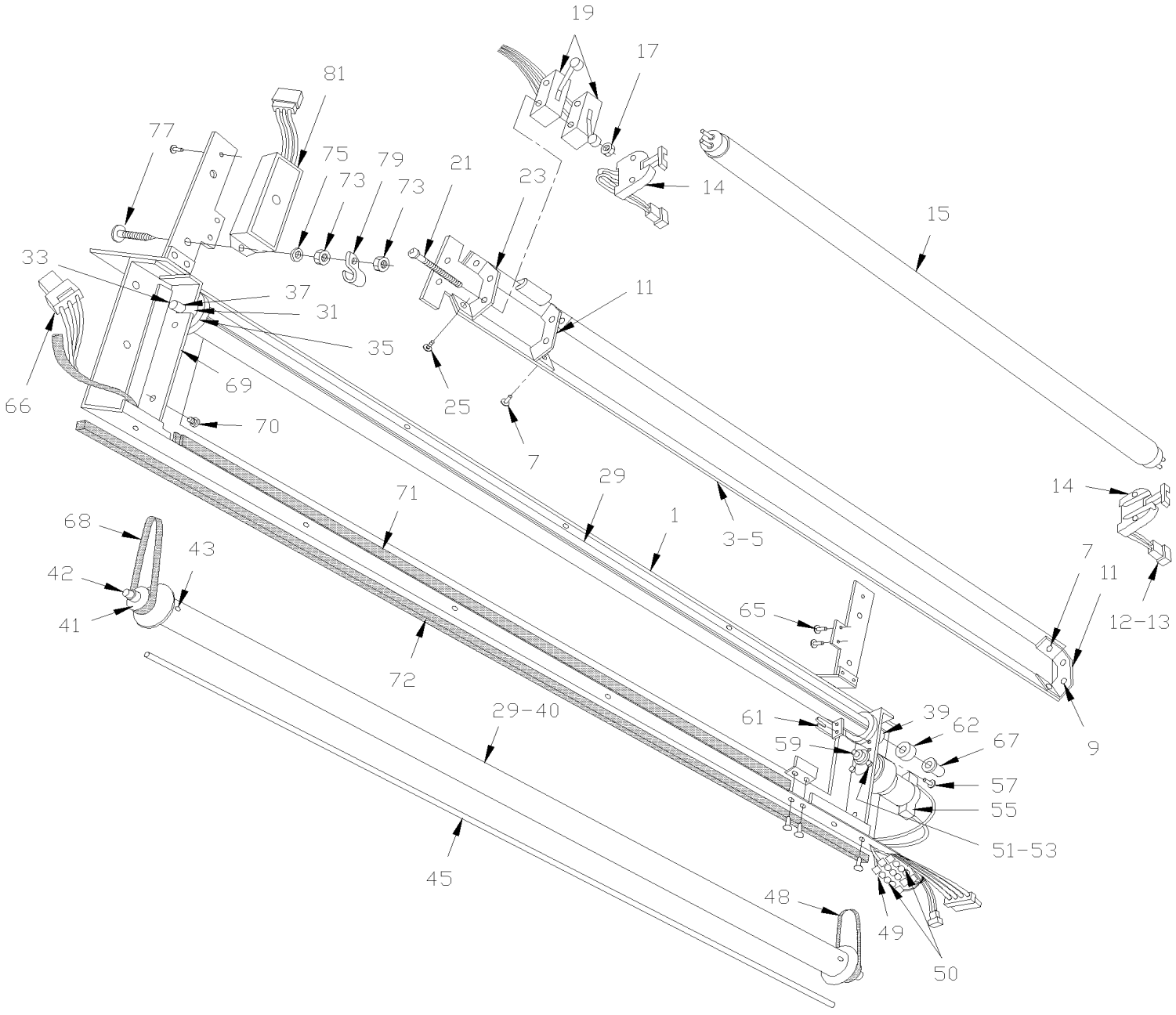

From Y-7046 To 6-8906		Date:07/2024	PAGE:Y2-1814-01

DESTINATION SIGN - ELECTRICAL

Item#	Part	Description	XLII 45	XLII MTH40	XLII MTH45	XLII MTH45E	NOTES
	Call order desk	DESTINATION SIGN ASSY	1				P
1	440330	. FRAME ASSY	1				
3	440237	. SUPPORT ASSY / TO FIX FLUORESCENT TUBE & ACCESSORIES	1				
5	440240	. . REFLECTOR	1				
7	504114	. . RIVET POP DOME OE 3/16x1/4 AL	4				
9	500518	. . SCREW MA BDG PH #4-40x1/2 Z050	4				
11	440227	. . BRACKET / TO FIX BIPIN HOLDER	2				
12	560900	. . CONNECTOR / COM. MATE-N-LOCK / PH 2C / AMP 1-480319-0	2				
13	560853	. . PIN TERMINAL / 24-18 / AMP 60618-1	4				
14	830101	. . SOCKET / BIPIN HOLDER	2				
15	830120	. . TUBE / 30WATT / F30T8CW4 - 30"/ G13 MED BIPIN	1				
17	502717	. . NUT HEX NYRT #6-32 ZP	4				
19	561109	. . MICRO SWITCH	2				
21	502718	. . SCREW MA PAN PH #6-32x2 ZP	2				
23	440236	. . BRACKET / TO FIX MICROSWITCH	1				
25	500148	. . SCREW MA RND PH #6-32x1/2 SS	2				
NS	506338	. . RUBBER CHANNEL / 1/16" x 1/4" INT "U" SHAPE / ROUND C.T.L.	AR				
NS	440238	. ROLLER ASSY	1				
29	440195	. . ROLLER	1				
31	940030	. . PULLEY	1				
33	440225	. . ROD	1				
NS	440252	. . SPRING EXTENSION / .500 O.D. x 10.562 x .054	1				
NS	505407	. . SPRING, PIN 1/8 x 1/2 SS	1				
35	440255	. . GUIDE ASSY	1				
37	500440	. . WASHER FL .250x.562x.065 Z050	1				
39	440254	. . GUIDE ASSY	1				
NS	504006	. . RIVET POP CK OE 1/8x5/16 AL	2				
NS	440239	. ROLLER ASSY	1				
40	440195	. . ROLLER	1				
41	940030	. . PULLEY	2				
42	440254	. . GUIDE ASSY	2				
43	504006	. . RIVET POP CK OE 1/8x5/16 AL	2				
45	440213	. ROD / TO FIX CURTAIN	2				
NS	440250P	. CURTAIN / TO PRINT NAMES / SPECIFIED NAMES	1				A
NS	940023	. . CURTAIN WHITE / S.L.	AR				
48	940033	. BELT / 80TH	1				
49	062807	. RESISTOR ASSY 82 OHMS 2 W	1				
49	562108	. . RESISTOR / 82 OHMS / 2 W	2				
49	561539	. . TAB RECEPTACLE TERMINAL INSUL. NYLON / 16 / AMP 3-520141-2	2				
49	561761	. . SHRINK TUBING / .750" - .375" / BLACK / ALPHA FIT-221-3/4-4B	AR				
50	062339	. DIODE ASSY	2				
50	561904	. . TAB TERMINAL INSULATION NYLON / 22-18 / AMP 2-520103-2	1				

From Y-7046 To 6-8906		Date:07/2024	PAGE:Y2-1814-01

DESTINATION SIGN - ELECTRICAL

Item#	Part	Description	XLII 45	XLII MTH40	XLII MTH45	XLII MTH45E	NOTES
50	560931	. . DIODE / 3AMPS	1				
50	561626	. . TAB RECEPTACLE TERMINAL INSUL. NYLON / 22 / AMP 2-520264-4	1				
50	560785	. . SHRINK TUBING / .375" - .187" / BLACK / ALPHA FIT-300-3/8-4B	AR				
51	502724	. SCREW CAP HEX #10-32x1/4 BZC	2				
53	500240	. WASHER LO EXT .195x.410x.025 Z050	2				
55	940031	. MOTOR	1				
57	504103	. RIVET POP DOME OE 1/8x1/8 AL	2				
59	440249	. PULLEY MOTOR	1				
61	440224	. BRACKET	1				
62	440220	. SPACER	1				
65	504114	. RIVET POP DOME OE 3/16x1/4 AL	4				
66	062810	. CABLE / FROM DESTINATION SIGN TO HARNESS	1				
67	507138	. BUSHING, NYLINER W/SHOULDER (4-L-4-F)	4				
68	940032	. BELT / 128TH	1				
69	440222	. PLATE	1				
70	500417	. SCREW TP PAN PH #6x3/8 Z050	2				
71	506071	. TAPE RUB ADH1 CC POL 1/8" x 1/2" x 50' / GREY 2520X	AR				
72	506268	. TAPE RUB ADH1 URE 3/8" x 1/2" x 25' / GREY 1820	AR				
73	500786	. NUT HEX #10-24 Z050	3				
75	500964	. WASHER FL .203x.500x.047 Z050	2				
77	500387	. SCREW MA RND PH #10-24x3/4 Z050	2				
79	560479	. CLAMP / 3/8" I.D.	1				
81	330236	. BALLAST ASSY / 24 VOLTS	1				
81	830121	. . BALLAST / 24 VOLTS	1				
81	561667	. . CONNECTOR / UNIVERSAL MATE-N-LOK / PH 3C / AMP 1-480701-0	1				
81	561513	. . PIN TERMINAL / 20-14 / AMP 350538-3	3				
81	504273	. CABLE TIE / 1/8" X 3"1/2	AR				
		A) NOT INCLUDE IN ASSY #440241P					
		P) CALL ORDER DESK FOR SPECIFIC APPLICATION (V.I.N.)					

From Y-7046 To 6-8906		Date:07/2024	PAGE:Y2-1814-02
DESTINATION SIGN - "POCATEC"			

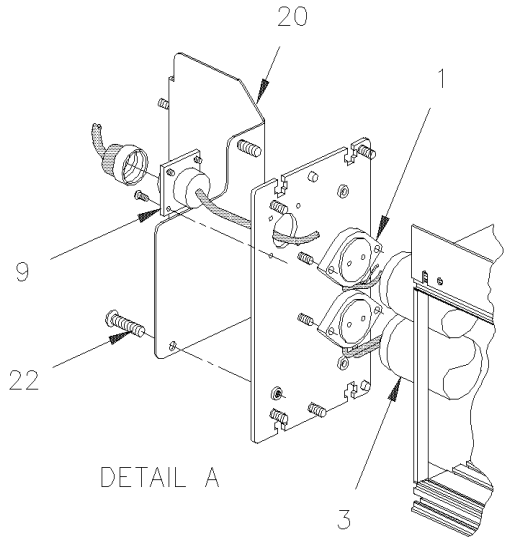

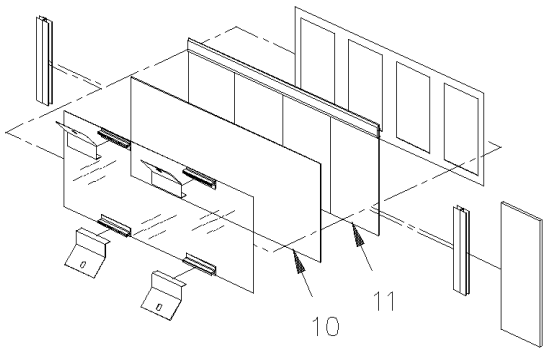

Preliminary

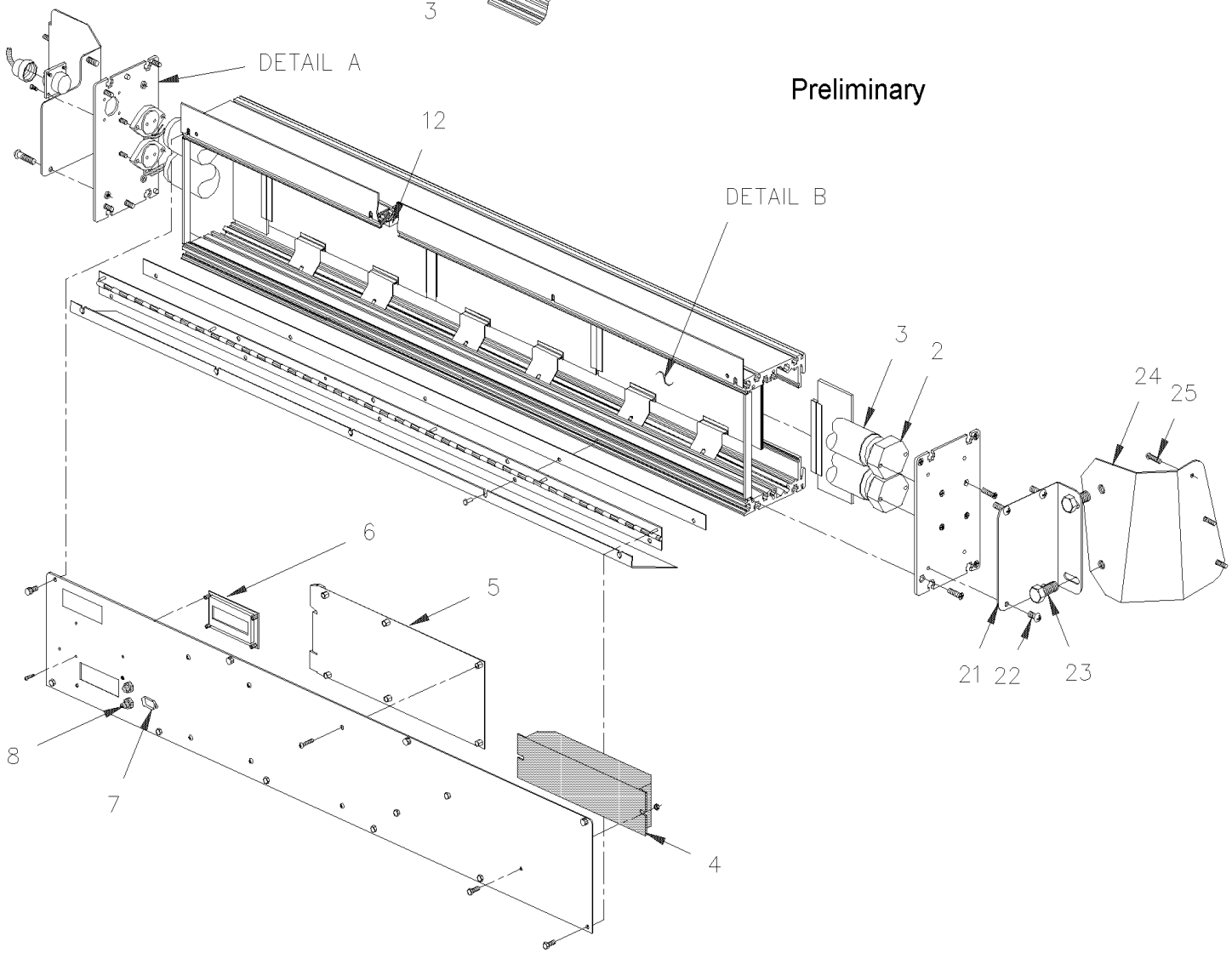

From Y-7046 To 6-8906		Date:07/2024	PAGE:Y2-1814-02

DESTINATION SIGN - "POCATEC"

Item#	Part	Description	XLII 45	XLII MTH40	XLII MTH45	XLII MTH45E	NOTES
	940050	FRONT DESTINATION SIGN "POCATEC"	1				
1	830162	. FLUORESCENT SOCKET NON RETRACTABLE	2				
2	830163	. FLUORESCENT SOCKET RETRACTABLE	2				
3	830161	. TUBE / 30WATT / F30T12/CW/RS -36"/G13MED BIPIN	2				
4	940052	. BALLAST	1				
5	940044	. CONTROL BOARD	1				
NS	562309	. . FUSE / 2 AMPS / 2A	1				
6	940045	. REAR CD DISPLAY	1				
7	N.S.P.	. SERIAL LINK CONNECTOR / (205203-1)	1				2
7	N.S.P.	. SOCKET, SERIAL LINK CONNECTOR CONTACT / (5-66504-9)	AR				2
8	940046	. ROUTE SELECTOR BUTTON	2				
9	561635	. CONNECTOR / CPC SERIES 1 / PH 9C / AMP 206705-1	1				
9	N.S.P.	. PIN, SIGN CONNECTOR CONTACT / (66361-2)	AR				2
10	940047	. FRONT LEXAN WINDOW	3				
11	940048	. 4 CHARACTERS GLASS ASSY	3				
12	940053	. INTERFACE BOARD	1				
20	440312	SUPPORT L.H. / W/DIGITAL	1				
21	440313	SUPPORT R.H. / W/DIGITAL	1				
22	500873	SCREW MA RND PH #8-32x3/4 SS BK	6				
NS	500163	SCREW CAP HEX 1/4-20x3/4 G5 Z050	2				
23	500440	WASHER FL .250x.562x.065 Z050	2				
NS	500478	WASHER LO SPT .380x.683x.094 Z050	2				
24	440314	SUPPORT R.H. / W/DIGITAL	1				
25	500333	SCREW TP OV PH #6x3/4 BK	6				
NS	500345	WASHER FN CKF .187x.500x.090 BR BK	6				
NS	440309	COVER / WDIGITAL	1				
NS	940051	CABLE ADAPTOR / INTERFACE / W/CD PC TO DESTINATION SING	1				
		2) NOT SOLD BY PREVOST (SEE MANUFACTURING PART NUMBER AT END OF DESCRIPTION LINE)					

From Y-7046 To 6-8906		Date:07/2024	PAGE:Y2-1814-05
DESTINATION SIGN - INSTALLATION			

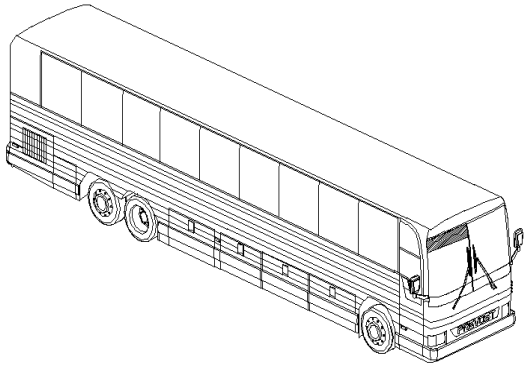

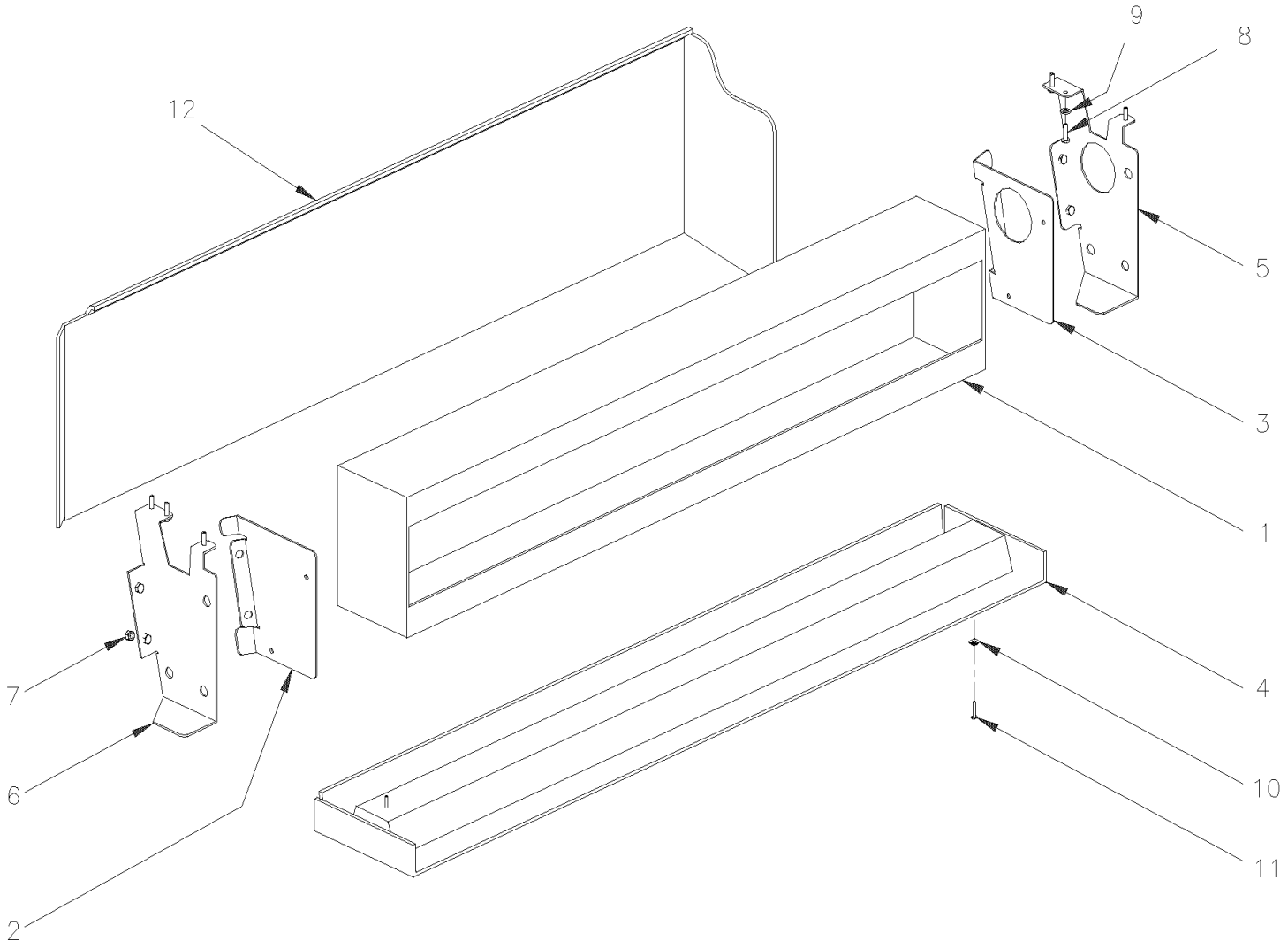

From Y-7046 To 6-8906		Date:07/2024	PAGE:Y2-1814-05

DESTINATION SIGN - INSTALLATION

Item#	Part	Description	XLII 45	XLII MTH40	XLII MTH45	XLII MTH45E	NOTES
1	940050	FRONT DESTINATION SIGN "POCATEC"	1				
2	440364	SUPPORT R.H. / W/"POCATEC"	1				
3	440363	SUPPORT L.H. / W/"POCATEC"	1				
4	440361	COVER UNDER	1				
5	440359	SUPPORT L.H. / W/DIGITAL To 3-7991	1				
5	440372	SUPPORT L.H. / W/"POCATEC From 3-7992	1				
6	440362	SUPPORT R.H. / W/"POCATEC" To 3-7991	1				
6	440371	SUPPORT R.H. / W/"POCATEC" From 3-7992	1				
7	502511	NUT HEX NYRT M6-1.0 Z050	4				
8	500658	SCREW TC PAN PH #10-24x3/4 Z050	6				
9	500473	WASHER LO SPT .262x.489x.062 Z050	6				
10	500463	WASHER FN CKF .187x.500x.090 BR Z050	10				
11	500552	SCREW TP OV PH #6x3/4 Z050	10				
12	440360	COVER REAR / W"POCATEC"	1				
NS	500260	SCREW TC FL PH #8-32x3/4 BK	6				
20	400638	MOULDING / 11" / "U" SHAPE DRIVER'S NAME HO	1				
21	400636	PLATE / STAMPED "NOM DU CONDUCTEUR"	1				
21	400637	PLATE / STAMPED "DRIVER'S NAME" / REAR	1				
21	400601	PLATE (BLANK) / FOR DRIVER'S NAME / SPECIFY NAME	1				

From Y-7046 To 8-9339		Date:07/2024	PAGE:Y2-1816-00
ROLLER BLIND - DRIVER' S & WINDSHIELD			

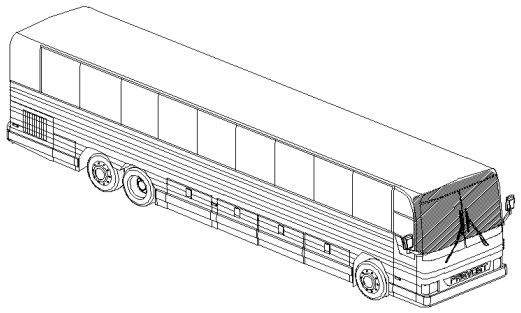

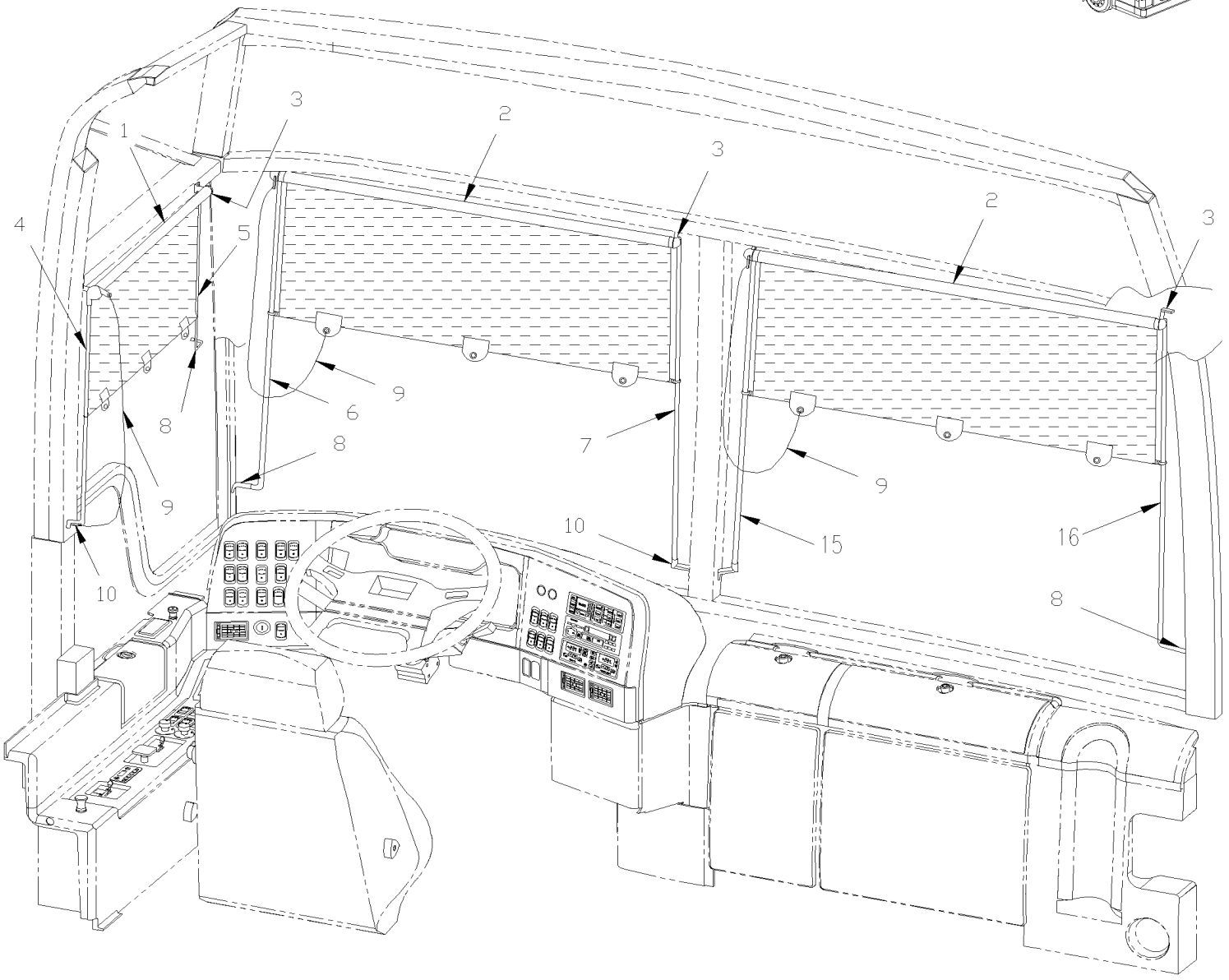

From Y-7046 To 8-9339		Date:07/2024	PAGE:Y2-1816-00

ROLLER BLIND - DRIVER' S & WINDSHIELD

Item#	Part	Description	XLII 45	XLII MTH40	XLII MTH45	XLII MTH45E	NOTES
1	900596	BLIND ROLLER / CHARCOAL / 600MM To 2-7768	1	1	1	1	
1	901042	BLIND ROLLER / CHARCOAL / 600MM From 2-7769	1	1	1	1	
NS	900597	. GUIDING PLUG / EACH END OF BLIND	2	2	2	2	
2	900486	BLIND ROLLER / CHARCOAL / 996MM To 2-7768	1	1	1	1	
2	901043	BLIND ROLLER / CHARCOAL / 996MM From 2-7769	1	1	1	1	
NS	900597	. GUIDING PLUG / EACH END OF BLIND	2	2	2	2	
3	900478	BEARING HOLDER / R.H. / BLACK CASTING	1	1	1	1	
NS	500333	SCREW TP OV PH #6x3/4 BK	AR	AR	AR	AR	
4	405069	ROD / BACKWARD / 640MM X 25MM	1	1	1		B
4	405129	ROD / BACKWARD / 720MM X 25MM		1	1	1	C
5	405192	ROD / FORWARD / 481MM X 130MM	1	1	1		B
5	405193	ROD / FORWARD / 670MM X 126MM		1	1	1	C
6	405071	ROD / L.H. STREET SIDE / 718MM X 107MM	1	1	1	1	
7	405070	ROD / R.H. STREET SIDE / 710MM X 20MM	1	1	1	1	
8	403570	ROD HOLDER / BLACK / STEEL "L" SHAPE To 8-9212	3	3	3	3	
8	901263	ROD HOLDER / BLACK / PLASTIC 50MM From 8-9213		3	3	3	
NS	5001091	SCREW TC PAN PH #4-40x1/4 BK	AR	AR	AR	AR	
NS	500864	SCREW CAP HEX 1/2-13x3/4 G5 ZP	4	4	4	4	
9	900482	CORD, W/BUTTON / BLACK 1700MM	1	1	1	1	
NS	500333	SCREW TP OV PH #6x3/4 BK	AR	AR	AR	AR	
NS	500814	SCREW TP BDG PH #6x3/4 BK	AR	AR	AR	AR	
10	900476	ROD HOLDER 90° / BLACK PLASTIC 30MM C/L	AR	AR	AR	AR	
NS	500814	SCREW TP BDG PH #6x3/4 BK	AR	AR	AR	AR	
NS	5001091	SCREW TC PAN PH #4-40x1/4 BK	AR	AR	AR	AR	
15	405077	ROD / L.H. CURBSIDE / 710MM X 20MM	1	1	1	1	
15	405138	ROD / L.H. CURBSIDE / 478MM X 22MM	1				A
16	405072	ROD / R.H. CURBSIDE / 718MM X 107MM	1	1	1	1	
16	405137	ROD / R.H. CURBSIDE / 445MM X 79MM	1				A
		FOLLOWING ITEMS ARE USED ONLY FOR DELIVERY					
NS	405934	ROD R.H. 746MM		1	1	1	
NS	405935	ROD L.H. 755MM		1	1	1	
NS	405936	SUN VISOR 395MM X 1054MM		1	1	1	
NS	504273	CABLE TIE / 1/8" X 3"1/2		4	4	4	
NS	952622	WIRE CLAMP / 5/32" I.D.		2	2	2	
		A) BUS WITH DESTINATION SIGN					
		B) BUS & MTH 83"					
		C) MTH 86" & 89"					

From Y-7046 To 8-9339		Date:07/2024	PAGE:Y2-1816-05
ROLLER BLIND - WINDSHIELD W/ELECTRICAL			

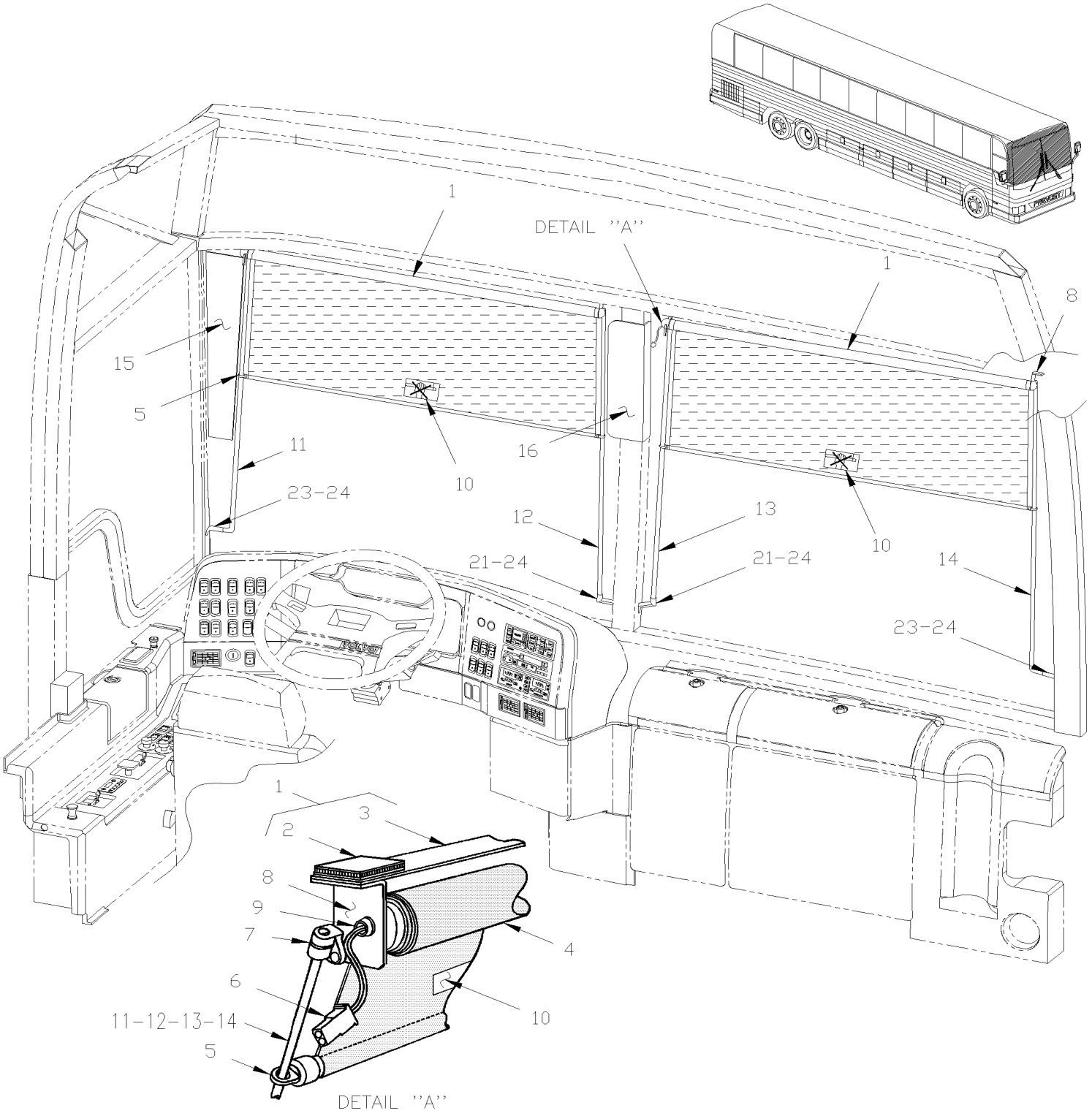

From Y-7046 To 8-9339		Date:07/2024	PAGE:Y2-1816-05

ROLLER BLIND - WINDSHIELD W/ELECTRICAL

Item#	Part	Description	XLII 45	XLII MTH40	XLII MTH45	XLII MTH45E	NOTES
1	402950	ROLLER BLIND ASSY / ELECTRIC To 2-7768	1	1	1	1	
2	506318	. TAPE DUAL LOCK 1" x 150' / BLACK SJ3541 To 2-7768	AR	AR	AR	AR	
3	402948	. BRACKET To 2-7768	1	1	1	1	
4	900590	. ROLLER BLIND ELECTRIC To 1-7641	1	1	1	1	
4	901040	. ROLLER BLIND ELECTRIC From 1-7642 To 2-7768	1	1	1	1	
4	900986	. ROLLER BLIND ASSY / ELECTRIC From 2-7769 To 5-8535	1	1	1	1	
4	901121	. ROLLER BLIND ASSY / ELECTRIC From 5-8536	1	1	1	1	
4	408404	. ROLLER BLIND / ELECTRIC / PRODUCT IMPROVMENT	1	1	1	1	
. NS	901532	. . ROLLER BLIND ASSY / ELECTRIC	2	2	2	2	
5	900597	. . GUIDING PLUG / EACH END OF BLIND	1	1	1	1	
6	500898	. SCREW CAP HEX 7/16-14x1 3/4 G5 ZP	1	1	1	1	
6	560854	. SOCKET TERMINAL / 24-18 / AMP 60617-1	2	2	2	2	
7	900594	. BRACKET KIT ASSY R.H. To 2-7768					A
7	900554	. BRACKET KIT ASSY L.H. To 2-7768	1	1	1	1	C
7	504106	. RIVET POP DOME OE 1/8x1/4 AL To 2-7768	2	2	2	2	
7	901048	. KIT BRACKET L.H. & R.H. From 2-7769	1	1	1	1	
8	402949	. BRACKET / L.H. To 2-7768	1	1	1	1	
8	402972	. BRACKET / R.H. To 2-7768	1	1	1	1	
8	504105	. RIVET POP DOME OE 1/8x3/16 AL To 2-7768	4	4	4	4	
9	507309	. BUSHING NYLINED .312x.375x.078x.500 To 2-7768	1	1	1	1	
NS	500437	. WASHER FL .125x.375x.040 Z050 To 2-7768	2	2	2	2	
NS	502564	. WASHER LO SPT 6.1x11.8x1.6 Z050 To 2-7768	1	1	1	1	
10	402952	. DECAL	1	1	1	1	
11	404990	ROD 730MM X 70MM To 3-7973	1				
11	405373	ROD / STREET SIDE / 730MM X 70MM / 10 DEG BEND From 3-7974	1				
11	404990	ROD 730MM X 70MM To 3-8018		1	1	1	
11	405373	ROD / STREET SIDE / 730MM X 70MM / 10 DEG BEND From 3-8019		1	1	1	
11	405255	ROD / L.H. STREET SIDE / 882MM X 70MM	1				B
12	401898	ROD, 29" To 3-7973	1				
12	405374	ROD 737MM / 10 DEG BEND From 3-7974	1				
12	401898	ROD, 29" To 3-8018		1	1	1	
12	405374	ROD 737MM / 10 DEG BEND From 3-8019		1	1	1	
12	405256	ROD / L.H. CURBSIDE / 888MM	1				B
13	401898	ROD, 29" To 3-7973	1				
13	405374	ROD 737MM / 10 DEG BEND From 3-7974	1				
13	401898	ROD, 29" To 3-8018		1	1	1	
13	405374	ROD 737MM / 10 DEG BEND From 3-8019		1	1	1	
13	405253	ROD / L.H. CURBSIDE / 625MM	1				B
13	409093	ROD / L.H. CURBSIDE / 467MM To 3-7973	1				D
13	405376	ROD / L.H. CURBSIDE / 467MM From 3-7974	1				D
14	404990	ROD 730MM X 70MM To 3-7973	1				
14	405375	ROD / CURBSIDE / 730MM X 70MM / 10 DEG BEND From 3-7974	1				

From Y-7046 To 8-9339		Date:07/2024	PAGE:Y2-1816-05

ROLLER BLIND - WINDSHIELD W/ELECTRICAL

Item#	Part	Description	XLII 45	XLII MTH40	XLII MTH45	XLII MTH45E	NOTES
14	404990	ROD 730MM X 70MM To 3-8018		1	1	1	
14	405375	ROD / CURBSIDE / 730MM X 70MM / 10 DEG BEND From 3-8019		1	1	1	
14	405254	ROD / R.H. CURBSIDE / 625MM X 83MM	1				B
14	409094	ROD / R.H. CURBSIDE / 453MM X 83MM To 3-7973	1				D
14	405377	ROD / R.H. CURBSIDE / 460MM X 70MM / 10 DEG BEND From 3-7973	1				D
15	327564	PLEXIGLASS / TINTED L.H. STREET SIDE / 647MM	1				B
16	327565	PLEXIGLASS / TINTED L.H. CURBSIDE / 418MM	1				B
NS	500950	WASHER FL .187x.625x.094 RUB	5				B
NS	500345	WASHER FN CKF .187x.500x.090 BR BK	5				B
NS	500333	SCREW TP OV PH #6x3/4 BK	3				B
NS	5001298	SCREW TP BDG PH #6x1 1/2 BK	2				B
21	900476	ROD HOLDER 90° / BLACK PLASTIC 30MM C/L To 8-9212	2				
23	403570	ROD HOLDER / BLACK / STEEL "L" SHAPE From 8-9213	2				
23	901263	ROD HOLDER / BLACK / PLASTIC 50MM	2	2	2	2	
24	500409	SCREW TP PAN PH #8x1/2 BK	4	4	4	4	
24	500814	SCREW TP BDG PH #6x3/4 BK	4	4	4	4	
100	405409	KIT, ELECTRIC ROLLER BLIND	1	1	1	1	
. NS	IS-01043	. SEE INSTRUCTION SHEET	1	1	1	1	
		A) INCLUDE ROD HOLDER, ADJUSTING NUT, LOCK WASHER & NUT SOLD ONLY ASSY					
		B) WITH DESTINATION SIGN "POCATEC" (ORLEANS)					
		C) INCLUDE ROD HOLDER					
		D) BUS WITH DESTINATION SIGN					

From Y-7046 To 6-8906		Date:07/2024	PAGE:Y2-1816-10
SUN SHADE - PASSENGER'S WINDOW			

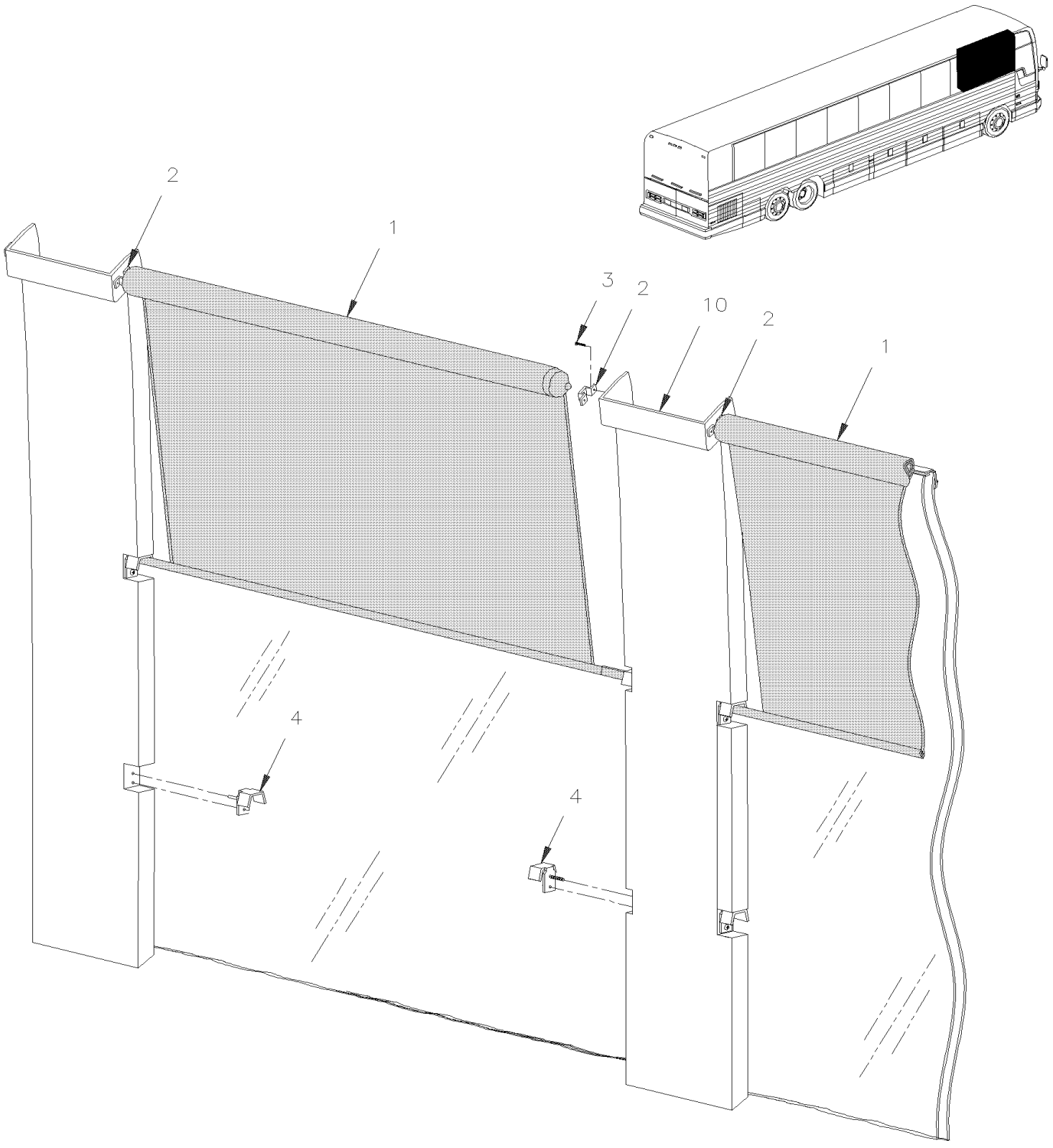

From Y-7046 To 6-8906		Date:07/2024	PAGE:Y2-1816-10

SUN SHADE - PASSENGER'S WINDOW

Item#	Part	Description	XLII 45	XLII MTH40	XLII MTH45	XLII MTH45E	NOTES
1	900977	SUN SHADE / 1140MM ROD WIDE	17				
1	901004	SUN SHADE / W.C.L. / 1035MM ROD WIDE	1				
1	901005	SUN SHADE / W.C.L. / 1071MM ROD WIDE	1				
2	900979	ATTACHMENT CLIP-ON	34				
3	504107	RIVET POP DOME OE 1/8x5/16 AL	2				
3	502578	WASHER FL 3.2x7.0x0.5 Z050	2				
4	404609	HOOK SINGLE W/1 SCREW HOLE LIGHT GREY	4				
4	409091	BRACKET, R.H. "O"	AR				
4	409090	BRACKET, L.H. "D"	AR				
10	**Y2-1833-00**	**WINDOW FINISHING CAP & WALL**					

From Y-7046 To 8-9339		Date:07/2024	PAGE:Y2-1817-00
SUN VISOR - "LE MIRAGE"			

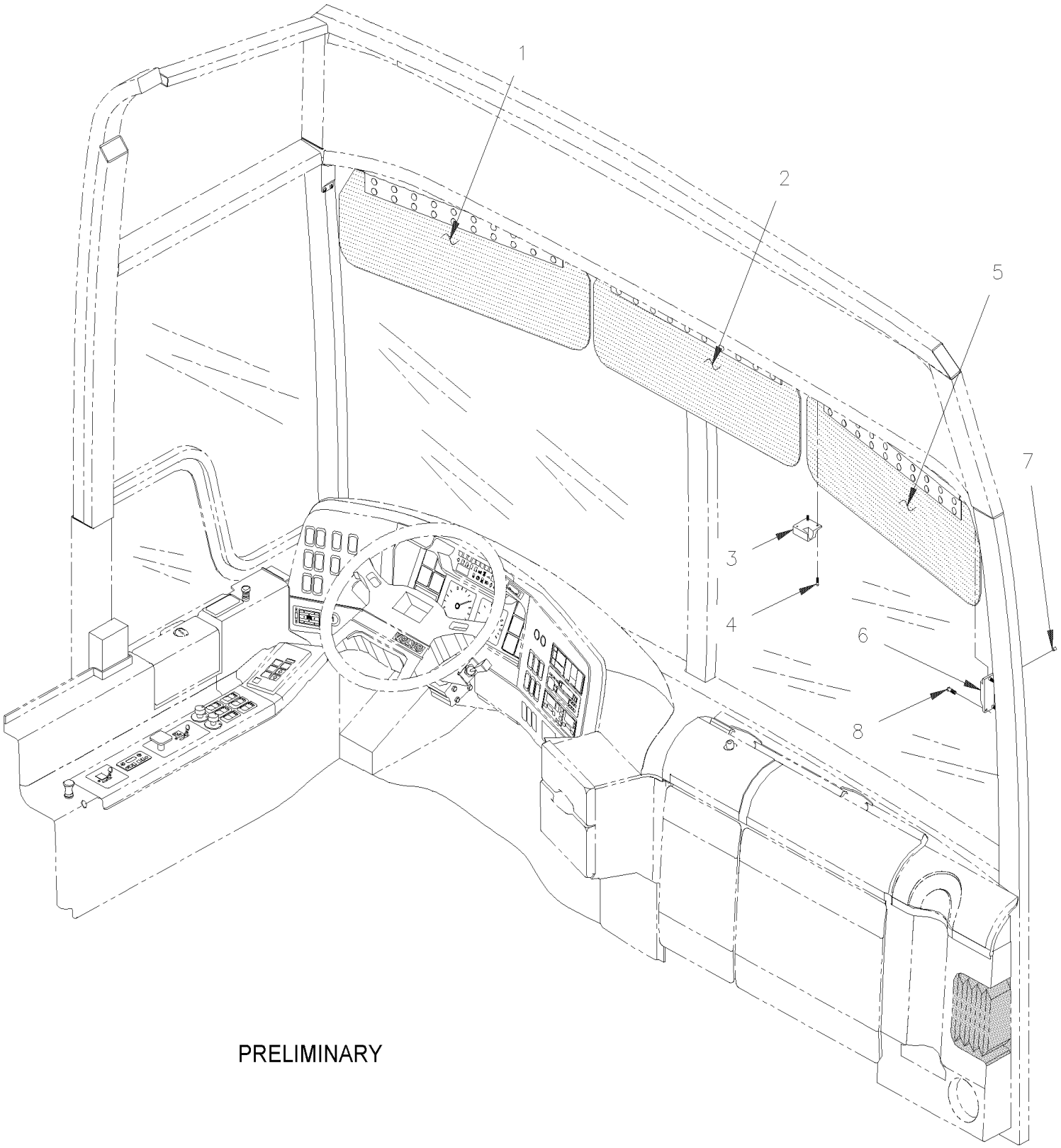

PRELIMINARY

From Y-7046 To 8-9339		Date:07/2024	PAGE:Y2-1817-00

SUN VISOR - "LE MIRAGE"

Item#	Part	Description	XLII 45	XLII MTH40	XLII MTH45	XLII MTH45E	NOTES
1	404741	SUN VISOR ASSY / L.H. W/COVERING (BLACK)		1	1	1	
1	404724	. SUN VISOR ASSY / L.H. W/O COVERING		1	1	1	
2	404740	SUN VISOR ASSY / CENTRAL W/COVERING (BLACK)		1	1	1	
2	404726	. SUN VISOR ASSY / CENTRAL W/O COVERING		1	1	1	
3	401586	ATTACHMENT, R.H. / CENTRAL SUN VISOR		1	1	1	
3	401585	ATTACHMENT, L.H. / CENTRAL SUN VISOR		1	1	1	
NS	401535	HOOK, RETAINING / L.H. SUN VISOR W/O CENTRAL & R.H. SUNVISOR		1	1	1	
3	505173	SPRING, PIN 1/8 X 3/4		2	2	2	
NS	500409	SCREW TP PAN PH #8x1/2 BK		4	4	4	
NS	500263	SCREW TP PAN PH #8x3/8 BK		4	4	4	
5	404739	SUN VISOR ASSY / R.H. W/COVERING (BLACK)		1	1	1	
5	404725	. SUN VISOR ASSY / R.H. W/O COVERING		1	1	1	
5	404706	. . PLATE, SUN VISOR LH & RH		2	2	2	
5	404722	. . PLATE, SUN VISOR CENTRAL		2	2	2	
5	404727	. . PRESSURE PLATE		2	2	2	
5	504117	. . RIVET POP DOME CLE 3/16x3/8 AL		20	20	20	
5	500438	. . WASHER FL .187x.437x.050 Z050		20	20	20	
5	401708	. . ROD, SUN VISOR CENTRAL		1	1	1	
5	404709	. . ROD, SUN VISOR LH & RH		1	1	1	
5	560171	SLEEVE INSULATING		1	1	1	
6	401465	ATTACHMENT, PIVOT L.H. & R.H. CHARCOAL		2	2	2	
7	500303	SCREW SET HEXS CUP #10-24x3/16		2	2	2	
8	500630	SCREW TP OV PH #10x1 Z050		6	6	6	

From Y-7046 To 8-9339		Date:07/2024	PAGE:Y2-1820-00
MIRROR - INTERIOR			

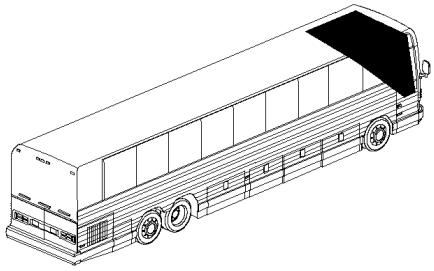

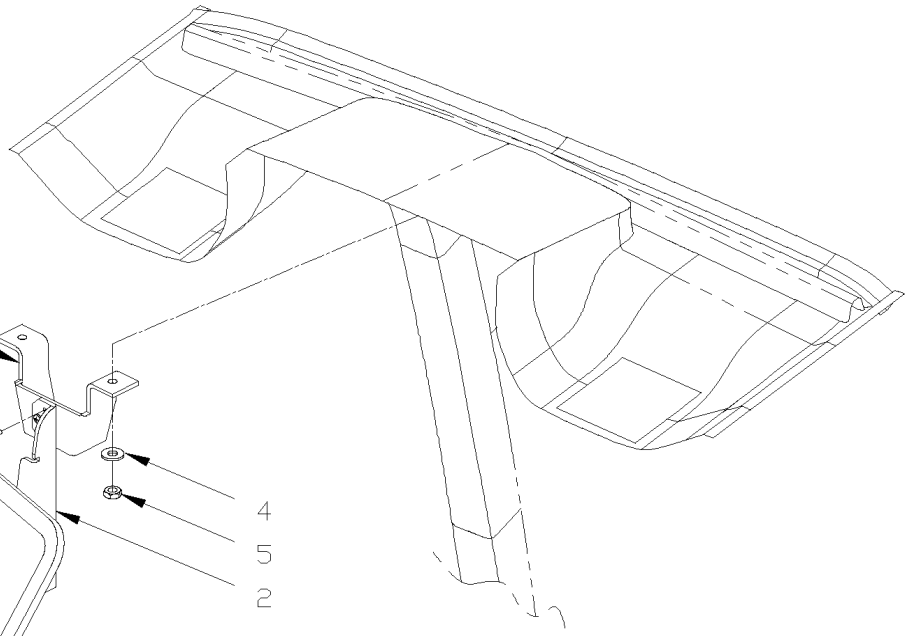

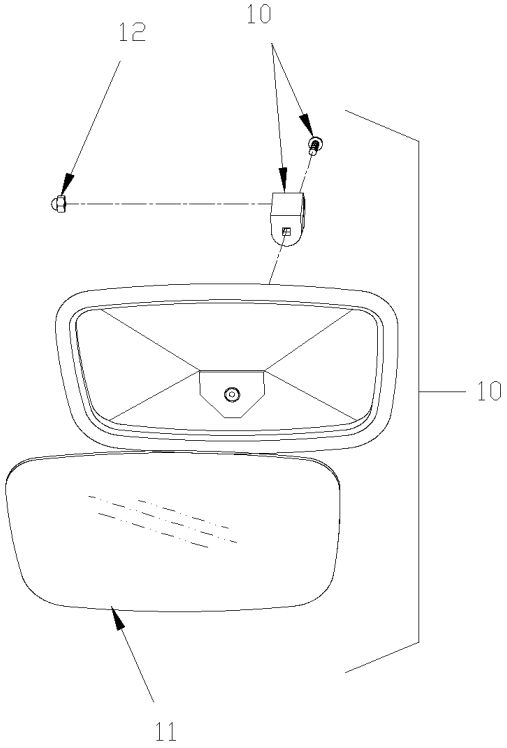

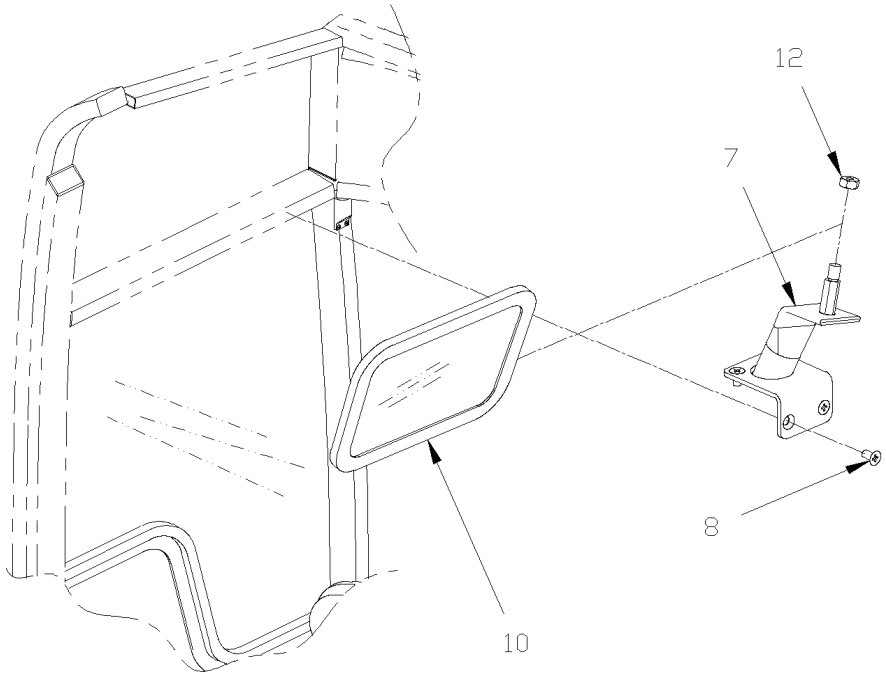

From Y-7046 To 8-9339		Date:07/2024	PAGE:Y2-1820-00

MIRROR - INTERIOR

Item#	Part	Description	XLII 45	XLII MTH40	XLII MTH45	XLII MTH45E	NOTES
1	408099	MIRROR SUPPORT / CENTER WINDSHIELD	1	1	1	1	
2	405136	SUPPORT CENTRAL ASSY, MIRROR	1	1	1	1	
3	502569	SCREW MA PAN PH M6-1.0x16 BK	3	3	3	3	
4	500411	WASHER FL .260x.697x.050 SS	2	2	2	2	
5	5001353	NUT HEX NYRT M6-1.0 SS	2	2	2	2	
7	405301	MIRROR SUPPORT / L.H. DRIVER`S WINDOW	1				
8	5001198	SCREW MA FL PH M6-1.0x16 Z050	4				
10	900438	MIRROR ASSY SAFETY	1	1	1	1	
11	900440	GLASS / SAFETY	1	1	1	1	
12	500780	NUT HEX CAP 5/16-18 Z050	1	1	1	1	

		Date:07/2024	PAGE:Y2-1821-01
DRIVER'S SEAT "NATIONAL SEATING" - MODEL 93B			

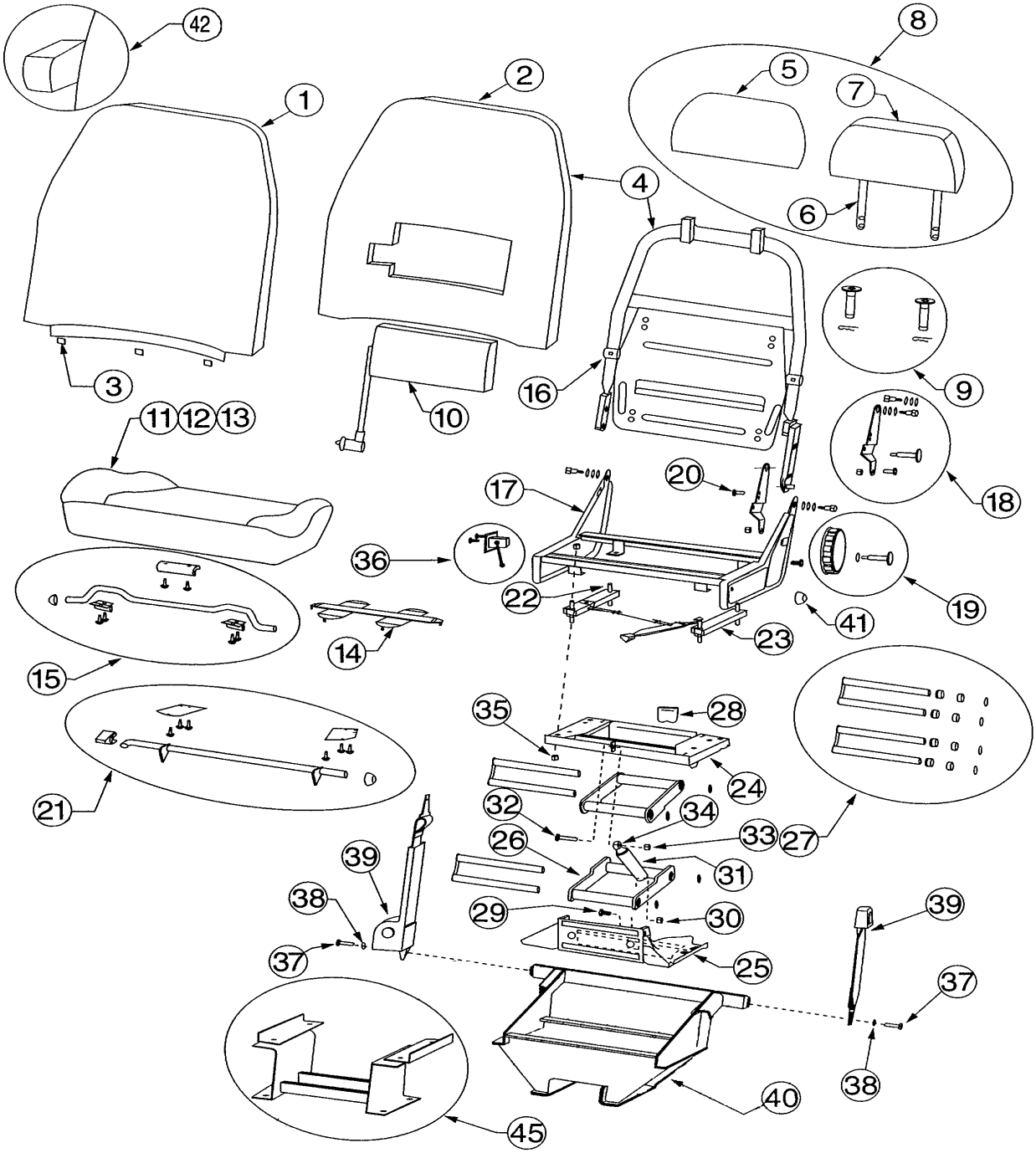

		Date:07/2024	PAGE:Y2-1821-01
DRIVER'S SEAT "NATIONAL SEATING" - MODEL 93B			

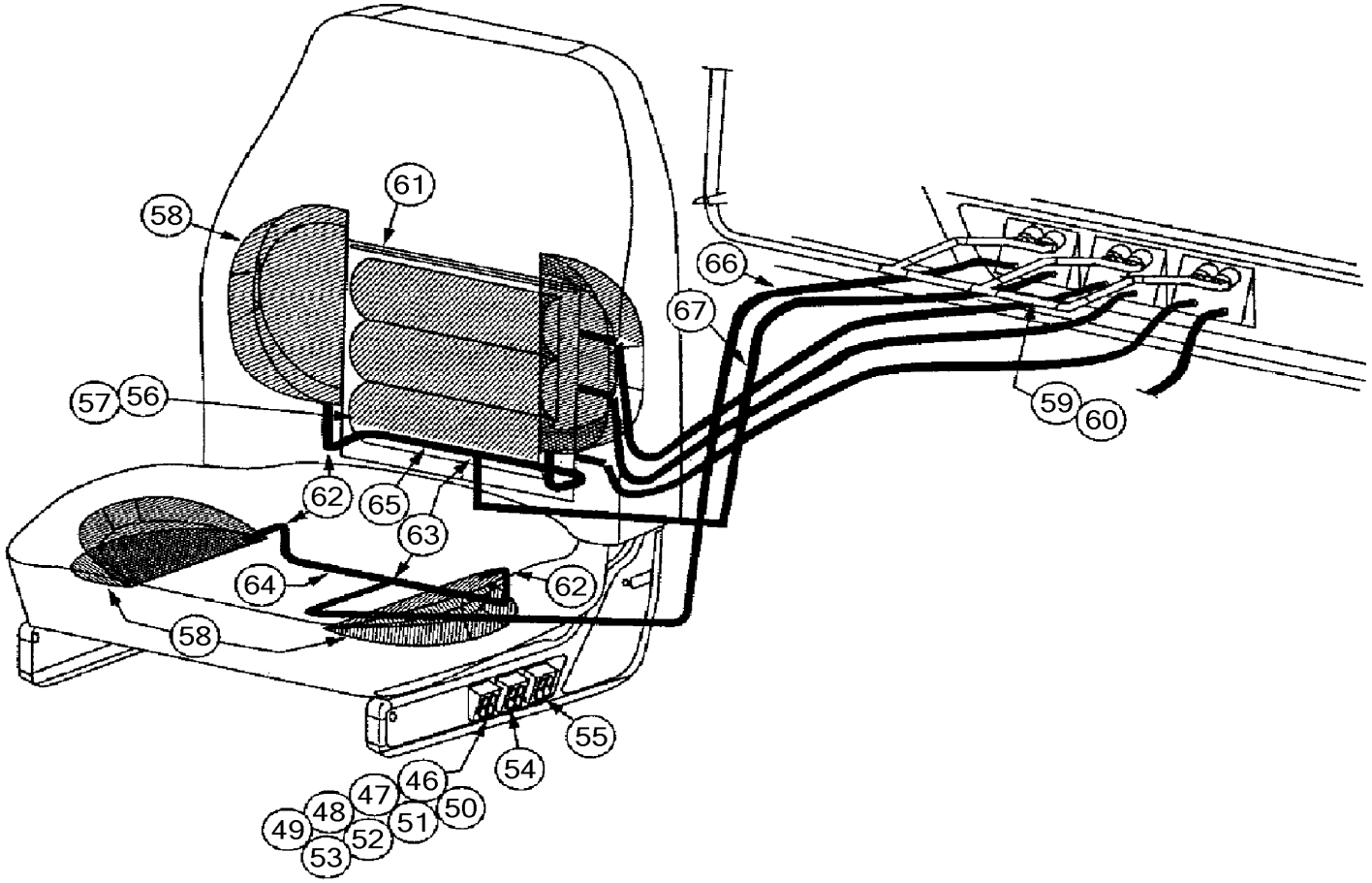

		Date:07/2024	PAGE:Y2-1821-01

DRIVER'S SEAT "NATIONAL SEATING" - MODEL 93B

Item#	Part	Description	XLII 45	XLII MTH40	XLII MTH45	XLII MTH45E	NOTES
	861848	DRIVER'S SEAT - "NATIONAL" - MODEL 93B From 2-7377 To 2-7715	1				
	862164	DRIVER'S SEAT - "NATIONAL" - MODEL 93B From 2-7741 To 2-7763	1				
	862344	DRIVER'S SEAT - "NATIONAL" - MODEL 93B	1				
	862487	DRIVER'S SEAT - "NATIONAL" - MODEL 93B From 4-8398 To 4-8570	1				
1	Call order desk	BACK COVER / 20"	1				P
2	Call order desk	BACK POLY / 20" STANDARD	1				P
3	Call order desk	"U" CLIP	3				P
4	Call order desk	BACK ASSY / 20"	1				P
5	Call order desk	HEADREST COVER	1				P
6	Call order desk	FIXED HEADREST FRAME ASSY	1				P
7	Call order desk	HEADREST POLY	1				P
8	Call order desk	HEADREST ASSY	1				P
9	Call order desk	BUSHING KIT	1				P
10	192188	PASSIVE AIR LUMBAR BAG	1				
11	Call order desk	CUSHION COVER / 20"	1				P
12	Call order desk	CUSHION POLY / 20" STANDARD	1				P
13	Call order desk	CUSHION ASSY / 20"	1				P
14	Call order desk	WEBBING	3				P
15	Call order desk	FRONT CUSHION ADJUSTER	1				P
16	Call order desk	BACK FRAME ASSY	1				P
17	Call order desk	LOWER FRAME ASSY	1				P
18	Call order desk	KIT BRACKET BACK TO LOWER FRAME	1				P
19	Call order desk	KNOB KIT - BACK INCLINE	1				P
20	Call order desk	RECLINE LIMIT BOLT	1				P
21	Call order desk	REAR CUSHION ADJUSTER	1				P
22	Call order desk	TRACK STUD	4				P
23	Call order desk	TRACK KIT	1				P
24	Call order desk	UPPER BASE ASSY	1				P
25	Call order desk	LOWER BASE ASSY	1				P
26	860103	UPPER ARM ASSY W/BUSHINGS - 96 BASE MODEL	2				
27	860652	KIT REPAIR, SHAFT & BUSHING / W/AIR SUSPENSION	1				
28	Call order desk	BUMPER	1				P
29	500190	SCREW CAP HEX 3/8-16x3/4 G5 Z050	1				
30	500265	NUT HEX STO 3/8-16 Z050	1				
31	865353	BLOCK-O-LIFT	1				
32	500183	SCREW CAP HEX 5/16-18x1 1/2 G5 PT Z050	1				
33	500685	NUT HEX NYRT 5/16-18 SS	1				
34	Call order desk	RELEASE MECHANISM	1				P
35	Call order desk	NUT,TRACK ATTACHMENT	8				P
36	19508592	CABLE ASSY	1				
37	500067	SCREW CAP HEX 7/16-20x1 G5 Z050	1				
38	Call order desk	WASHER 1/2	2				P

		Date:07/2024	PAGE:Y2-1821-01

DRIVER'S SEAT "NATIONAL SEATING" - MODEL 93B

Item#	Part	Description	XLII 45	XLII MTH40	XLII MTH45	XLII MTH45E	NOTES
39	19503838	RETRACTOR & BUCKLE	1				
40	Call order desk	RISER ASSY - "D" COACH	1				P
NS	363952	ANCHOR R.H. / DRIVE'R S SEAT / W/"NATIONAL SEATING" To 4-8397	1				A
NS	363953	ANCHOR L.H. / DRIVE'R S SEAT / W/"NATIONAL SEATING" To 4-8397	1				A
NS	363993	ADAPTOR SAFETY BELT / "Z" SHAPE / W/"NATIONAL SEATING" From 1-7745 To 4-8397	1				A
NS	5001117	SCREW CAP HEX M12-1.75x70 BK	4				B
NS	5001365	SCREW CAP HEX M12-1.75x30 G10.9 DP To 4-8397	3				
NS	500810	WASHER LO SPT 12.2x21.1x2.5 Z050	6				
NS	500958	WASHER FL .531x1.062x.095 SS	6				
41	Call order desk	CAP,CUSHION ADJUSTER ROD	2				P
42	Call order desk	ARMREST ASSY / L.H.	1				P
42	Call order desk	ARMREST ASSY / R.H.	1				P
45	Call order desk	RISER ASSY	1				P
46	Call order desk	VALVE HI/LO F/SINGLE CHAMBER	1				P
47	Call order desk	VALVE HI/LO F/TRIPLE CHAMBER	1				P
48	Call order desk	VALVE HI/LO F/BOLSTERS	1				P
49	Call order desk	VALVE BLANK/LO F/SINGLE CHAMBER	1				P
50	Call order desk	VALVE BLANK/LO F/TRIPLE CHAMBER	1				P
51	Call order desk	VALVE BLANK/LO F/BOLSTERS	1				P
52	Call order desk	VALVE HI/BLANK F/BASE	1				P
53	Call order desk	VALVE LO/LO F/SINGLE CHAMBER	1				P
54	Call order desk	VALVE LO/LO F/TRIPLE CHAMBER	1				P
55	Call order desk	VALVE LO/LO F/BOLSTERS	1				P
56	865265	SINGLE CHAMBER LUMBAR BAG	1				
57	865266	TRIPLE CHAMBER LUMBAR BAG	1				
58	Call order desk	AIR BOLSTER	1				P
59	Call order desk	MANIFOLD ASSY TRIPLE CHAMBER	1				P
60	Call order desk	MANIFOLD ASSY TRIPLE CHAMBER & BOLSTERS	1				P
61	Call order desk	WIRE LUMBAR BAG	1				P
62	Call order desk	ELBOW,PLASTICFITTING	1				P
63	Call order desk	FITTING 1/8”	1				P
64	Call order desk	CLEAR TUBING / 4.5"	1				P
65	Call order desk	GREEN TUBING / 4.5"	1				P
66	Call order desk	TUBING, CLEAR, 2.83FEET	1				P
67	Call order desk	TUBING, GREEN, 2.67FEET	1				P
		A) USE BETWEEN SEAT AND STRUCTURE					
		B) TO FIX SEAT ON FLOOR					
		P) CALL ORDER DESK FOR SPECIFIC APPLICATION (V.I.N.)					

		Date:07/2024	PAGE:Y2-1822-00
DRIVER'S SEAT - "ISRI" - 6800/338			

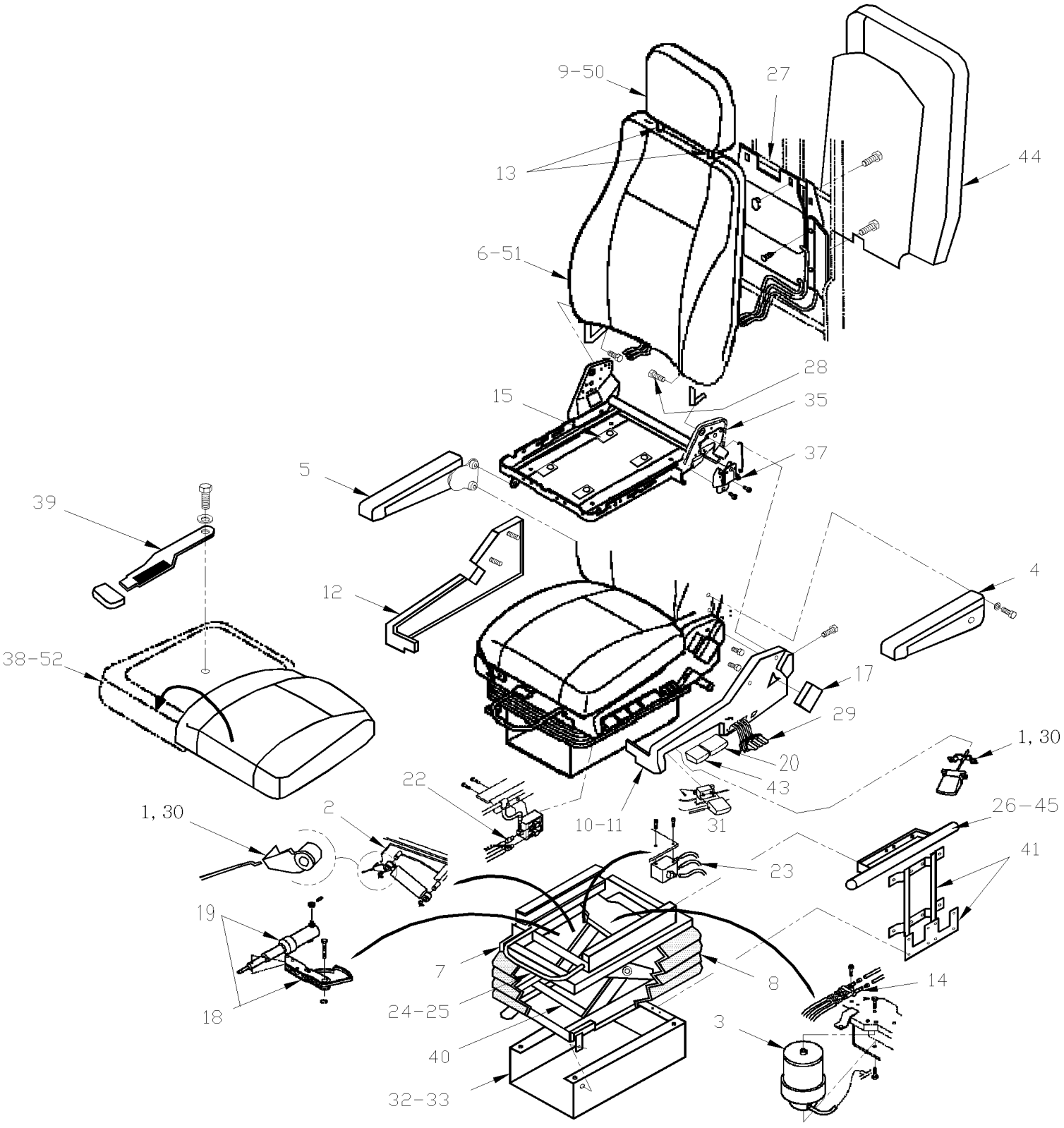

		Date:07/2024	PAGE:Y2-1822-00

DRIVER'S SEAT - "ISRI" - 6800/338

Item#	Part	Description	XLII 45	XLII MTH40	XLII MTH45	XLII MTH45E	NOTES
	364108	DRIVER'S SEAT ASSY W/COVERING / SPECYFIED COLOR CODE	1				F
	861373	DRIVER`S SEAT - "ISRI" - MODEL 6800/338 / W/R.H. CONTROL	1				A
	861374	DRIVER`S SEAT - "ISRI" - MODEL 6800/338 / W/R.H. CONTROL		1	1	1	B
NS	862420	. LEVER RETAINING CLIP	1	1	1	1	
NS	862421	. NUT PLASTIC WHITE	1	1	1	1	
NS	862422	. RETAINING CLIP	1	1	1	1	
NS	862423	. SCREW FOR RETAINING CLIP	1	1	1	1	
1	861638	. ADJUSTABLE SHOCK ABSORBER CABLE KIT	1	1	1	1	
2	861639	. ADJUSTABLE SHOCK ABSORBER KIT	1	1	1	1	
3	861640	. AIR SPRING KIT	1	1	1	1	
4	861641	. ARMREST KIT - LH / W/OUT COVERING		1	1	1	
4	861377	. ARMREST KIT - LH / W/POLYURETHANE PAD	1				
5	861642	. ARMREST KIT - RH / W/OUT COVERING		1	1	1	
5	861378	. ARMREST KIT - RH POLYURETHANE PAD	1				
6	861643	. BACKREST ASSY / NUDE	1	1	1	1	
. NS	864557	. . FOAM / BACKREST	1	1	1	1	
7	861644	. BOOT ADAPTER PLATE	1	1	1	1	
8	861645	. BOOT KIT	1	1	1	1	
9	861646	. HEADREST ASSEMBLY - NUDE	1	1	1	1	
10	861648	. COVER KIT CONTROL - LH	1	1	1	1	
11	861649	. COVER KIT CONTROL - RH	1	1	1	1	
12	861650	. COVER KIT NON-CONTROL - LH	1	1	1	1	
13	861647	. HEADREST BOOT (2PCS)	1	1	1	1	
14	861651	. DISTRIBUTION VALVE KIT	1	1	1	1	
15	861652	. GLIDE - SEAT PAN	1	1	1	1	
16	861653	. HANDLE KIT - SEAT FRAME - LH	1	1	1	1	
17	861654	. HANDLE KIT - SEAT FRAME - RH	1	1	1	1	D
18	864140	. KIT, CYLINDER & CAM ADJUSTEMENT KIT	1	1	1	1	
. 18	861655	. . HEIGHT ADJUSTMENT CAM KIT	1	1	1	1	
. 19	861656	. . HEIGHT ADJUSTMENT CYLINDER KIT	1	1	1	1	
18	864245	. KIT, CAM ADJUSTEMENT KIT	1	1	1	1	
NS	863741	. KIT SLIDING TRACK PLASTIC OBLONG	1	1	1	1	
20	862203	. AIR HEIGHT ADJUST HANDLE KIT RH	1	1	1	1	
22	861657	. HEIGHT ADJUSTMENT VALVE KIT - RH	1	1	1	1	
23	861658	. HEIGHT ADJUSTMENT VALVE KIT - SUSPENSION	1	1	1	1	
24	861659	. HORIZONTAL ADJUSTMENT SLIDE HANDLE	1	1	1	1	
25	861660	. HORIZONTAL ADJUSTMENT SLIDE SET	1	1	1	1	
26	862205	. SEAT BELT KIT NOT ILLUSTRATED / PAS ILLUSTRÉ	1	1	1	1	
27	861661	. LUMBAR/BOLSTER KIT OLD STYLE To 5-8471	1	1	1	1	
27	864242	. LUMBAR/BOLSTER KIT NEW STYLE From 5-8472	1	1	1	1	
28	862204	. BACKREST BOLT	2	2	2	2	
29	861662	. LUMBAR/BOLSTER VALVE RH	1	1	1	1	

		Date:07/2024	PAGE:Y2-1822-00

DRIVER'S SEAT - "ISRI" - 6800/338

Item#	Part	Description	XLII 45	XLII MTH40	XLII MTH45	XLII MTH45E	NOTES
30	862424	. HANDLE FOR ADJUSTMENT SHOCK	1	1	1	1	
NS	862425	. SHORT PIN ADJUSTMENT HANDLE	1	1	1	1	
NS	862426	. LONG PIN ADJUSTMENT HANDLE	1	1	1	1	
NS	862956	. HANDLE SUPPORT / PLASTIC BLACK	1	1	1	1	
31	861663	. QUICK AIR RELEASE VALVE AND HANDLE KIT - RH	1	1	1	1	
33	861664	. RISER KIT 76MM	1	1	1	1	
35	861665	. SEAT FRAME - RH	1	1	1	1	
37	861666	. SEAT FRAME TOOTH PLATE KIT RH	1	1	1	1	
38	861667	. SEAT PAN ASSEMBLY - NUDE OLD STYLE To 5-8471	1	1	1	1	
. NS	864556	. . FOAM / CUSHION To 5-8471	1	1	1	1	
38	864243	. SEAT PAN ASSEMBLY - NUDE NEW STYLE From 5-8472	1	1	1	1	
. NS	864237	. . CUSHHION FOAM NEW PATERN From 5-8472	1	1	1	1	
39	861668	. SEAT PAN ASSEMBLY LEVER AND HANDLE KIT	1	1	1	1	
40	861669	. SUSPENSION	1	1	1	1	
NS	864244	. . KIT , SUSPENSION HARDWARE REPAIR	1	1	1	1	
41	861670	. TETHER AND TETHER PLATE KIT	1	1	1	1	
43	861671	. TILT HANDLE KIT - RH	1	1	1	1	
44	861672	. BACKREST PANEL	1	1	1	1	
NS	363705	INTERFACE COPILOTE ISRI 6800		1	1	1	C
NS	363937	ANCHORAGE CO-PILOTE SEAT ASSY W/BOLT		4	4	4	C
. NS	326831	. ANCHORAGE "U" FORM 48MM x 38MM x 112MM		1	1	1	C
. NS	500958	. WASHER FL .531x1.062x.095 SS		1	1	1	C
. NS	500482	. WASHER LO SPT .506x.873x.125 Z050		1	1	1	C
. NS	500806	. SCREW CAP HEX M12-1.75X35 G10.9 G500		1	1	1	C
NS	362056	ANCHOR PLATE ASSY USE W/CURBSIDE SEAT 7/16-14x1" / 32MMx89MM		2	2	2	C
NS	362521	ANCHOR PLATE ASSY USE W/CURBSIDE SEAT 7/16-14x2" / 32MMx89MM		2	2	2	C
45	364128	DRIVER'S SAFETY BELT EXTENSION R.H.	1	1	1	1	E
45	364129	DRIVER'S SAFETY BELT EXTENSION L.H.	1	1	1	1	E
NS	500071	SCREW CAP HEX 7/16-20x1 1/2 G5 Z050	2	2	2	2	E
NS	500709	NUT HEX 7/16-20 Z050	2	2	2	2	E
NS	500810	WASHER LO SPT 12.2x21.1x2.5 Z050	4	4	4	4	E
NS	500860	NUT HEX M12-1.75 Z050	2	2	2	2	E
NS	502731	SCREW CAP HEX M12-1.75x40 G8.8 Z050	2	2	2	2	E
50	363740P	COVERING HEADREST ASSY / S.C.C. / DRIVER'S "ISRI" / 6800	1				
51	363738P	COVERING BACKREST ASSY / S.C.C. / DRIVER'S "ISRI" / 6800 To 5-8471	1				
51	364168P	COVERING BACKREST ASSY / S.C.C. / DRIVER'S "ISRI" / 6800 From 5-8472	1				
52	363739P	COVERING SEATREST ASSY / S.C.C. OLD STYLE / DRIVER'S "ISRI" / 6800 To 5-8471	1				
52	364071P	COVERING SEATREST ASSY / S.C.C. NEW STYLE / DRIVER'S "ISRI" / 6800 From 5-8472	1				
NS	864709	TUBE PLASTIC 6MM O.D. CHARCOAL W/RED LINE	AR	AR	AR	AR	
NS	864710	TUBE PLASTIC 6MM O.D. CHARCOAL W/GREY LINE	AR	AR	AR	AR	
NS	864711	TUBE PLASTIC 6MM O.D. CHARCOAL	AR	AR	AR	AR	
NS	641507	UNION / PUSH-IN FITTING / #4 x 6MM NP	1	1	1	1	

		Date:07/2024	PAGE:Y2-1822-00

DRIVER'S SEAT - "ISRI" - 6800/338

Item#	Part	Description	XLII 45	XLII MTH40	XLII MTH45	XLII MTH45E	NOTES
NS	641092	UNION TEE / NTA FITTING / #4x#4x#4 BR	1	1	1	1	
NS	5001862	SCREW CAP HEX M12-1.75x70 G10.9 N500	4	4	4	4	G
NS	500958	WASHER FL .531x1.062x.095 SS	4	4	4	4	G H
NS	500810	WASHER LO SPT 12.2x21.1x2.5 Z050	6	6	6	6	G H
NS	362549	SPACER / STRUCTURE & BASE / 27MM	4	4	4	4	G
NS	361677	JOINT / W/AIR SUSPENSION / W/2 HOLES .344 O / 3 1/8" x W/2" C/C	2	2	2	2	H
NS	363410	JOINT / W/AIR SUSPENSION / W/2 HOLES .562 O.D / 3 1/8" x W/2 1/8 C/C"	2	2	2	2	H
NS	364155	JOINT / W/AIR SUSPENSION / W/2 HOLES .344 O / 4 3/8" x W/3 1/4" C/C	1	1	1	1	H
NS	500860	NUT HEX M12-1.75 Z050	2	2	2	2	H
NS	5001365	SCREW CAP HEX M12-1.75x30 G10.9 DP	2	2	2	2	H
NS	867958	ADAPTOR	1	1	1	1	
NS	868125	UNION 4MM/4MM	1	1	1	1	
NS	868128	UNION 6MM/4MM	1	1	1	1	
NS	868833	AIR PIPE CONNECTOR SML	AR	AR	AR	AR	
		A) THIS SEAT IS WITHOUT COVERING & ARMREST					
		B) THIS SEAT HAS BLACK COVERING, LARGE ARMREST & HEADREST FOR FACTORY DELIVERY					
		C) USE WITH CO-PILOTE SEAT INSTALLATION					
		D) INCLUDE ALL KNOB FOR ITEM # 17, 20, 29, & 39					
		E) YOU REQUIRE THOSES COMPONENTS TO EXTEND DRIVER'S SAFETY BELT					
		F) INCLUDE ITEMS # 50, 51 & 52					
		G) TO FIX SEAT TO FLOOR					
		H) TO FIX SAFETY BELT					

		Date:07/2024	PAGE:Y2-1822-10
DRIVER'S SEAT - "ISRI" - 6000/515 & 6500/515			

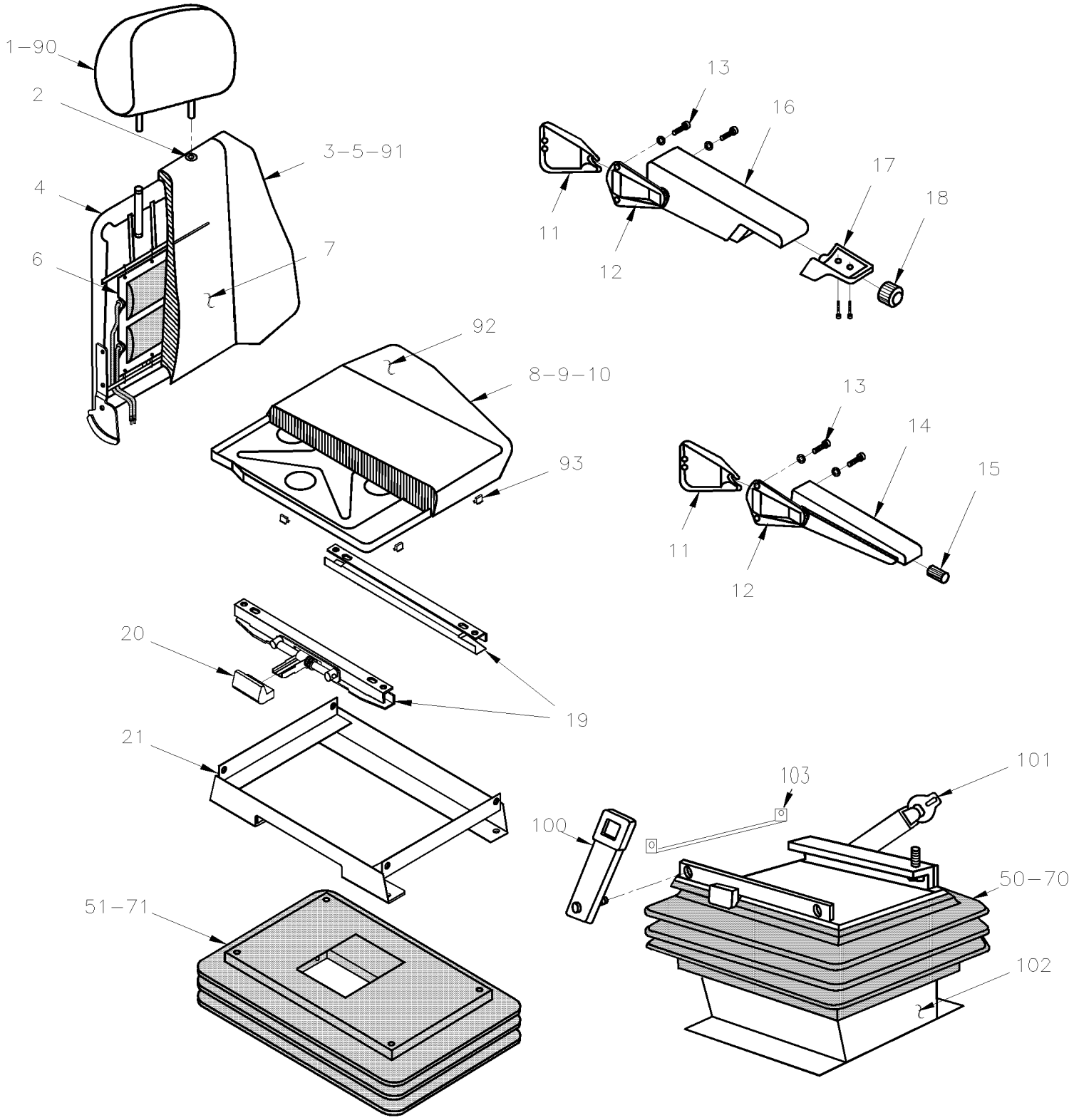

		Date:07/2024	PAGE:Y2-1822-10
DRIVER'S SEAT - "ISRI" - 6000/515 & 6500/515			

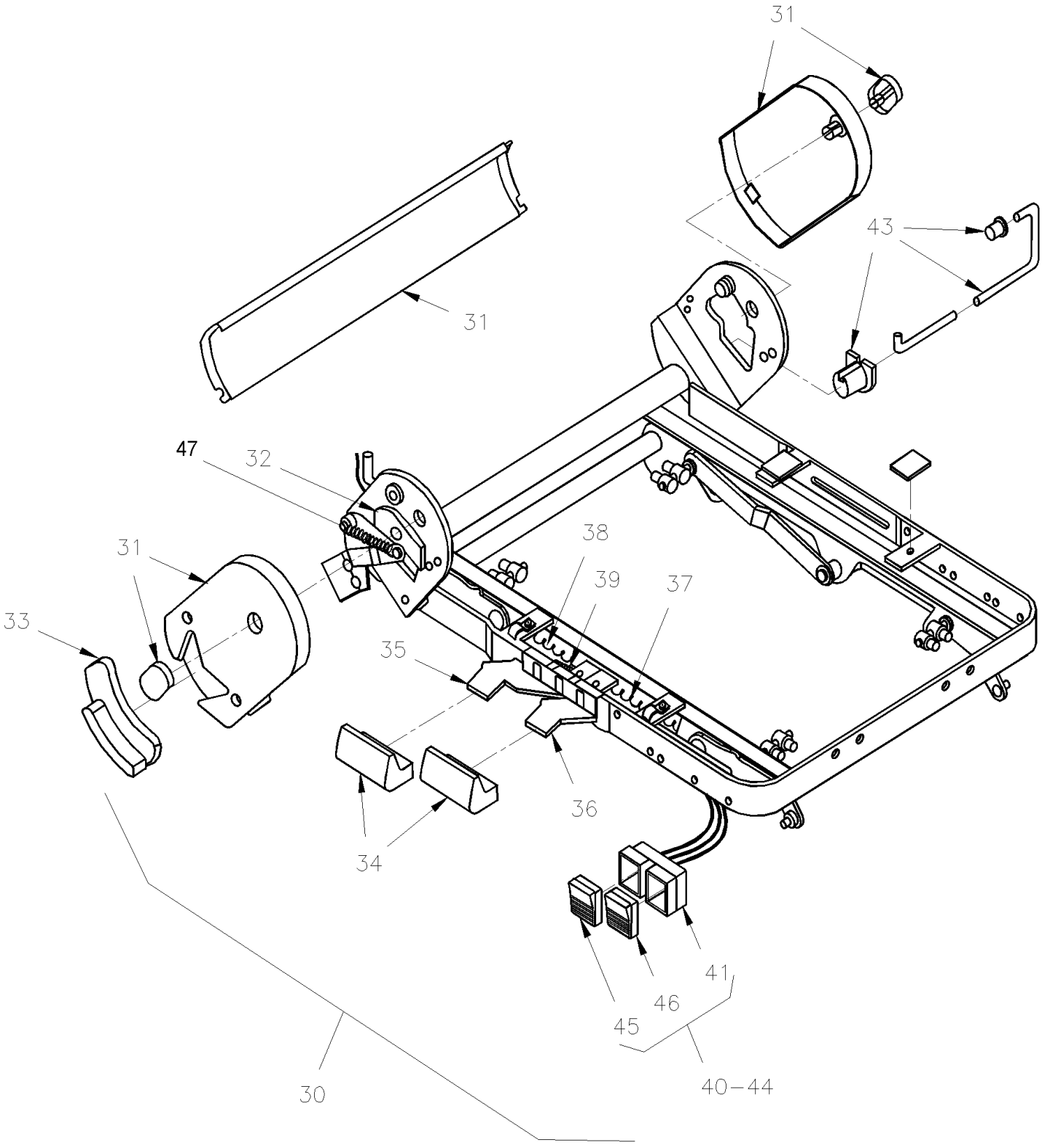

		Date:07/2024	PAGE:Y2-1822-10
DRIVER'S SEAT - "ISRI" - 6000/515 & 6500/515			

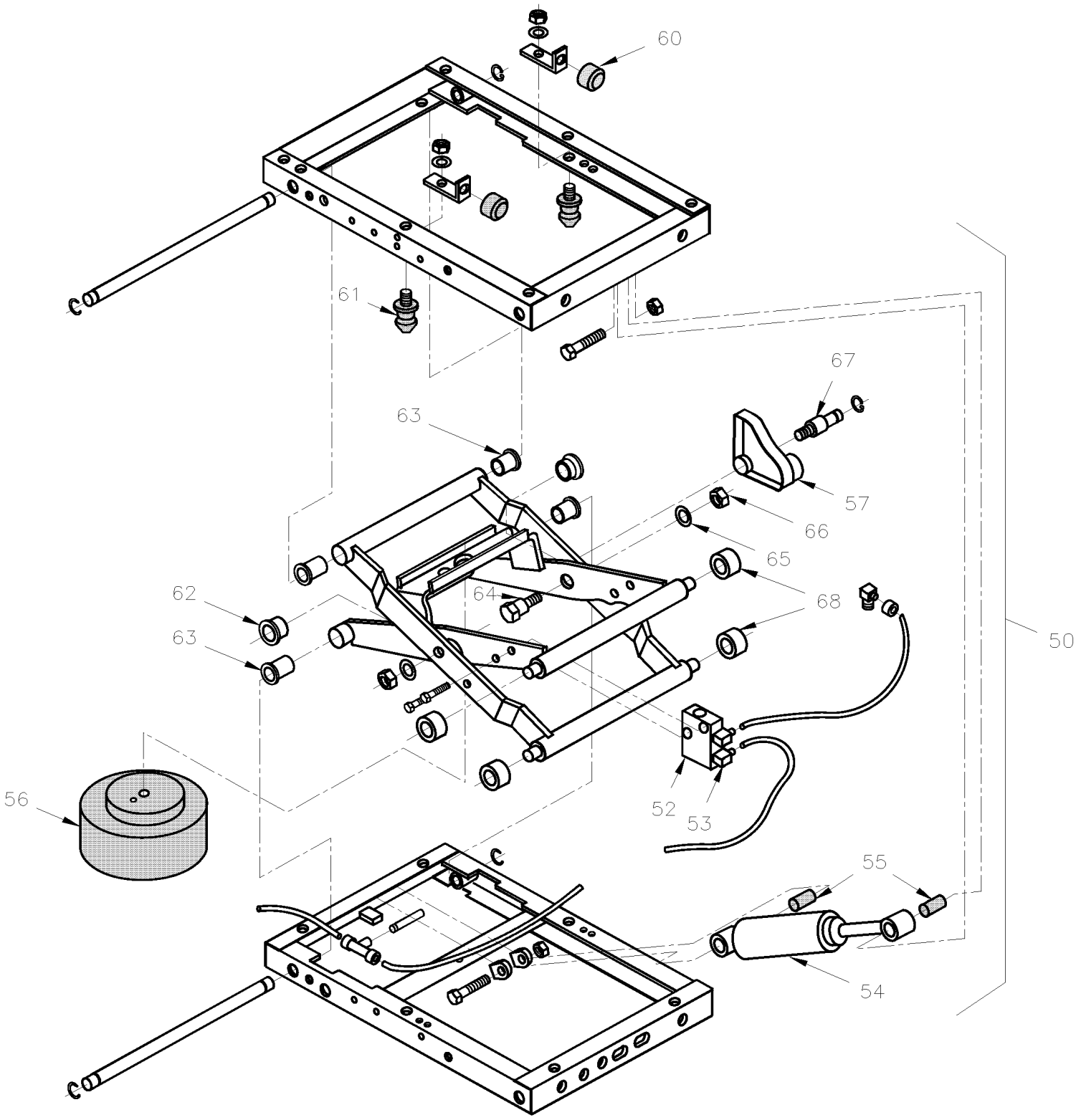

		Date:07/2024	PAGE:Y2-1822-10
DRIVER'S SEAT - "ISRI" - 6000/515 & 6500/515			

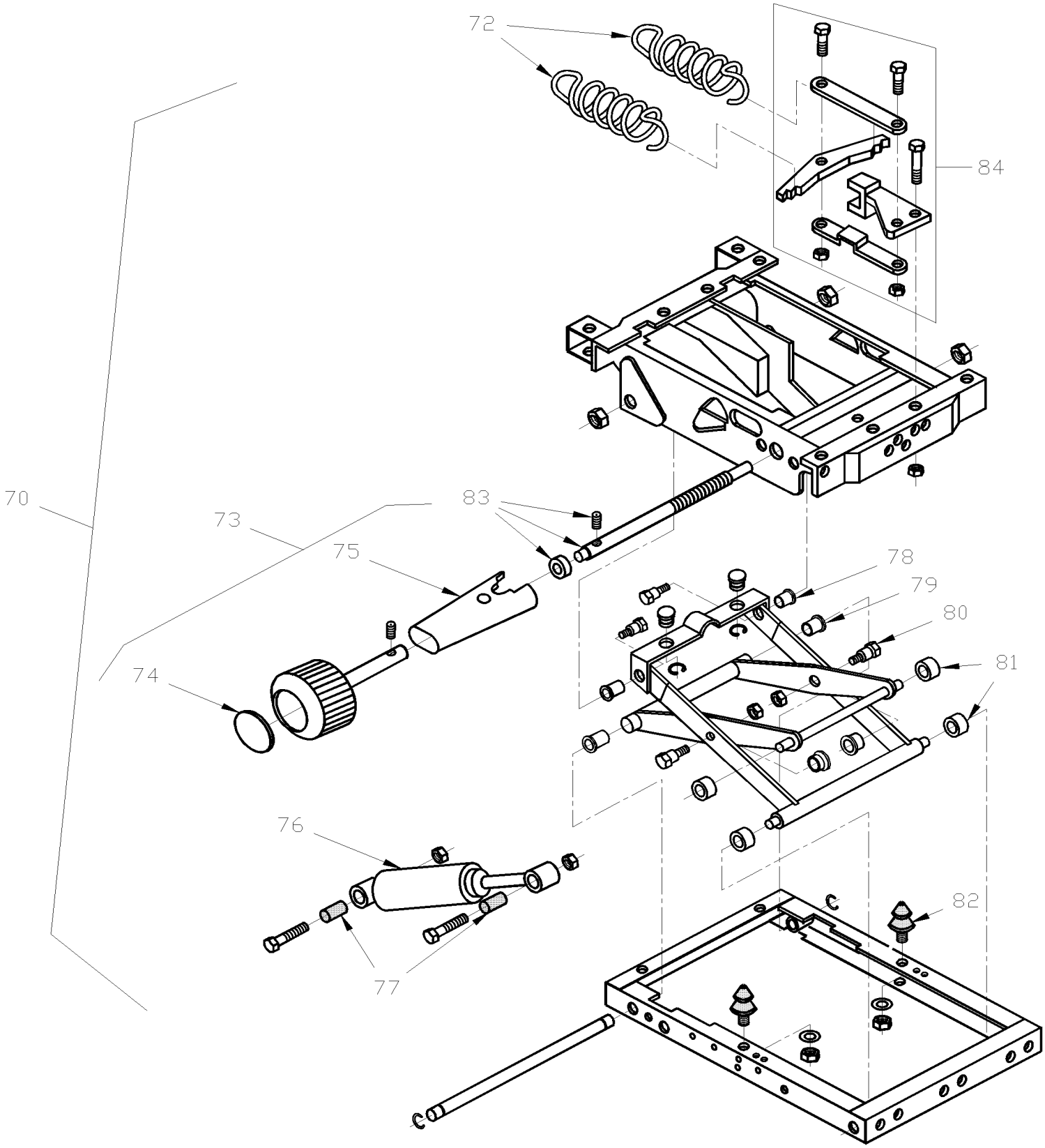

		Date:07/2024	PAGE:Y2-1822-10

DRIVER'S SEAT - "ISRI" - 6000/515 & 6500/515

Item#	Part	Description	XLII 45	XLII MTH40	XLII MTH45	XLII MTH45E	NOTES
	362833	SEAT ASSY MECHANIC / R.H. CONTROL W/COVERING	1				E
	860433	. DRIVER`S SEAT - "ISRI" - MODEL 6000/515 / MECHANIC / R.H. CONTROL	1				
	362834	SEAT ASSY MECHANIC / R.H. CONTROL & AIR LUMBAR W/COVERING	1				E
	860852	. DRIVER`S SEAT - "ISRI" - MODEL 6000/515 / MECHANIC / R.H. CONTROL & AIR LUMBAR	1				
	860855	DRIVER`S SEAT - "ISRI" - MODEL 6000/525 / ELECTRIC / AIR SUSPENSION / R.H.		1	1	1	
	862319	DRIVER`S SEAT - "ISRI" - MODEL 6000/525 / ELECTRIC / AIR SUSPENSION / R.H. CONTROL & LUMBAR SUPPORTS		1	1	1	
1	860441	HEADREST	1	1	1	1	
2	860483	GROMMET	2	2	2	2	
3	860508	BACKREST ASSY / R.H. CONTROL	1	1	1	1	
4	860509	. FRAME / R.H. CONTROL	1	1	1	1	
NS	860600	. FRAME / L.H. CONTROL		1	1	1	
5	860507	. FOAM	1	1	1	1	
6	860494	AIR BAG / LOMBAR	1	1	1	1	
7	860548	HEATING PAD / BACK	1	1	1	1	
8	860510	PAN SEAT SUBASSY	1	1	1	1	
9	860511	. FOAM / SEAT	1	1	1	1	
10	860547	HEATING PAD / SEAT	1	1	1	1	
11	860532	COVER	2	2	2	2	
12	N.S.S.	BRACKET / ARMREST	1	1	1	1	1
13	500544	SCREW CAP HEX M8-1.25x30 G8.8 Z050	2	2	2	2	
14	860440	ARMREST L.H. ADJUSTABLE	1				
NS	860442	ARMREST R.H. ADJUSTABLE	1				
14	868135	ARMREST L.H. BLACK		1	1	1	
. NS	868133	. COVER, ARMREST END, OPEN, BLK		1	1	1	
14	868134	ARMREST R.H. BLACK		1	1	1	
. NS	868133	. COVER, ARMREST END, OPEN, BLK		1	1	1	
15	860725	. KNOB	1	1	1	1	
16	860721	ARMREST ASSY L.H. / W/O COVERING		1	1	1	
NS	860722	ARMREST ASSY R.H. / W/O COVERING		1	1	1	
16	N.S.S.	COVERING		1	1	1	1
17	860723	. COVER KIT ARMREST		1	1	1	
18	860724	. KNOB		1	1	1	
19	861085	SLIDE MASTER / HANDLE & SLAVE / R.H. CONTROL	1	1	1	1	
20	861086	. HANDLE R.H.	1	1	1	1	
NS	861084	SLIDE SET "C" STYLE / HANDLE & SLAVE / W/SEAT #860852	1				
21	861100	SPACER STATIC /W/FOLLOWING SEAT NUMBER 860432 433,449,450,543,544,545 & 546	1	1	1	1	A
NS	861102	SPACER STATIC	1	1	1	1	B
30	861083	FRAME ASSY SEAT / R.H. CONTROL (AS SHOWN)	1				
NS	861081	FRAME ASSY SEAT / W/O MEMORY ELECTRICAL SEAT		1	1	1	
NS	861082	FRAME ASSY SEAT / W/MEMORY ELECTRICAL SEAT		1	1	1	
31	861090	. SIDE PLATE ASSY / KIT FOR R.H. CONTROL (AS SHOWN)	1	1	1	1	
32	861790	. TOOTH LEVER / R.H. SIDE (AS SHOWN)	1	1	1	1	

		Date:07/2024	PAGE:Y2-1822-10

DRIVER'S SEAT - "ISRI" - 6000/515 & 6500/515

Item#	Part	Description	XLII 45	XLII MTH40	XLII MTH45	XLII MTH45E	NOTES
32	861789	. TOOTH LEVER / L.H. SIDE	1	1	1	1	
33	860493	. HANDLE / R.H. CONTROL (AS SHOWN)	1	1	1	1	
33	861089	. HANDLE / R.H. CONTROL (AS SHOWN)	1	1	1	1	
NS	860589	. HANDLE / L.H. CONTROL		1	1	1	
34	861087	. HANDLE HEIGHT TILT / FRONT	1	1	1	1	
NS	861088	. HANDLE HEIGHT TILT / REAR	1	1	1	1	
35	860587	. LEVER HEIGHT REAR	1	1	1	1	
36	860588	. LEVER HEIGHT FOWARD	1	1	1	1	
37	860690	. LEVER ADJUSTMENT KEY / R.H. FRONT & L.H. RE	1	1	1	1	
38	860689	. LEVER ADJUSTMENT KEY / R.H. REAR & L.H. FRO	1	1	1	1	
39	860513	. KIT SPRING (2 LARGES & 3 SMALL)	1	1	1	1	
43	861091	. TORSION BAR KIT	1	1	1	1	
44	861092	. KIT VALVE LOMBAR SUPPORTS	1	1	1	1	C
NS	860887	. . KIT VALVE LUMBAR SUPPORTS / W/SEAT W/R.H. CONTROL					D
45	861093	. . . BUTTON AIR LOMBAR UPPER SECTION	1	1	1	1	
46	861094	. . . BUTTON AIR LOMBAR LOWER SECTION	1	1	1	1	
47	862217	. SPRING	1	1	1	1	
50	860518	SUSPENSION ASSY AIR		1	1	1	
51	860523	. COVER		1	1	1	
52	860719	. VALVE AIR		1	1	1	
53	860533	. ELBOW PLASTIC BLUE		1	1	1	
NS	868501	. NUT BLACK	1	1	1	1	
NS	N8882768	TEE AIRLINE	1	1	1	1	
54	860521	. ABSORBER / 99LBS		1	1	1	
NS	860602	. ABSORBER / 120LBS		1	1	1	
55	860586	. . BUSHING / ABSORBER		2	2	2	
56	860522	. BELLOW		1	1	1	
. NS	866008	. . CONNECTOR AIR W/"O-RING"		1	1	1	
57	860515	. CAM		1	1	1	
NS	860693	. KIT REPAIR / AIR SUSPENSION		AR	AR	AR	
60	N.S.S.	. . BUMPER RUBBER		2	2	2	1
61	N.S.S.	. . BUMPER RUBBER		2	2	2	1
62	N.S.S.	. . BUSHING SPLIT FLANGE		2	2	2	1
63	N.S.S.	. . BUSHING FLANGE		4	4	4	1
64	N.S.S.	. . SCREW		1	1	1	1
65	N.S.S.	. . WASHER		2	2	2	1
66	N.S.S.	. . NUT		2	2	2	1
67	N.S.S.	. . BOLT		1	1	1	1
68	N.S.S.	. . ROLLER		4	4	4	1
70	860685	SUSPENSION ASSY MECHANICAL / R.H. CONTROL	1	1	1	1	
71	860526	. COVER	1	1	1	1	
72	860525	. SPRING EXTENSION / 1.800 O.D. x 6.75 x .340 FORMER	2	2	2	2	

		Date:07/2024	PAGE:Y2-1822-10

DRIVER'S SEAT - "ISRI" - 6000/515 & 6500/515

Item#	Part	Description	XLII 45	XLII MTH40	XLII MTH45	XLII MTH45E	NOTES
72	862913	. SPRING EXTENSION / KIT OF 2 1.800 O.D. x 6.75 x .340 SERVICE	1	1	1	1	
73	860658	. HANDWHEEL / R.H. CONTROL (AS SHOWN)	1	1	1	1	
74	860549	. . CAP PLASTIC	1	1	1	1	
75	860594	. . CAP SHAFT COVER	1	1	1	1	
76	860521	. ABSORBER / 99LBS	1	1	1	1	
NS	860602	. ABSORBER / 120LBS	1	1	1	1	
77	860586	. . BUSHING / ABSORBER	2	2	2	2	
NS	860692	. KIT REPAIR / MECHANICAL SUSPENSION	AR	AR	AR	AR	
78	N.S.S.	. . BUSHING SPLIT FLANGE	2	2	2	2	1
79	N.S.S.	. . BUSHING FLANGE	2	2	2	2	1
80	N.S.S.	. . BOLT	2	2	2	2	1
81	N.S.S.	. . ROLLER	4	4	4	4	1
82	N.S.S.	. . BUMPER	2	2	2	2	1
83	860864	SPINDLE KIT	1	1	1	1	
84	861746	. KIT WEIGHT ADJUSTMENT	1	1	1	1	
90	362201P	COVERING HEADREST ASSY / S.C.C. / DRIVER'S "ISRI" 6000 & 6500	1				
91	362204P	COVERING BACKREST ASSY / S.C.C. / DRIVER'S "ISRI" 6000 & 6500	1				
92	362203P	COVERING SEATREST ASSY / S.C.C. / DRIVER'S "ISRI" 6000 & 6500	1				
93	860527	CLIP	8	8	8	8	
NS	860484	SEW STRIP NYLON 10MM	AR	AR	AR	AR	
NS	860485	SEW STRIP NYLON 15MM	AR	AR	AR	AR	
NS	864709	TUBE PLASTIC 6MM O.D. CHARCOAL W/RED LINE	AR	AR	AR	AR	
NS	864710	TUBE PLASTIC 6MM O.D. CHARCOAL W/GREY LINE	AR	AR	AR	AR	
NS	864711	TUBE PLASTIC 6MM O.D. CHARCOAL	AR	AR	AR	AR	
100	362188	KIT BELT	1	1	1	1	
100	860607	. STIFF BUCKLE IN BOOT	1	1	1	1	
101	860977	. BELT SEAT	1	1	1	1	
101	860553	. BELT TETHER / BODY & SUSPENSION / (SET OF 2)	1	1	1	1	
102	361800	BASE DRIVER'S SEAT / W "ISRI" / 76.2MM HEIGHT / 3"	1	1	1	1	
NS	5001117	SCREW CAP HEX M12-1.75x70 BK	4	4	4	4	F
NS	500958	WASHER FL .531x1.062x.095 SS	4	4	4	4	F
NS	500810	WASHER LO SPT 12.2x21.1x2.5 Z050	4	4	4	4	F
NS	362549	SPACER / STRUCTURE & BASE / 27MM	4	4	4	4	F
NS	363104	BAR ICP / W/SEAT MODEL 6500/ELECTRIC To Y-7232		1	1	1	G
NS	363275	BAR ICP / W/SEAT MODEL 6801 / CURBSIDE To Y-7232		1	1	1	G
103	363945	BAR ICP / W/SEAT MODEL 6500 From Y-7233		1	1	1	G
NS	500179	SCREW CAP HEX 5/16-18x3/4 G5 Z050		2	2	2	G
NS	500777	NUT HEX STO 5/16-18 Z050		2	2	2	G
NS	361677	JOINT / W/AIR SUSPENSION / W/2 HOLES .344 O / 3 1/8" x W/2" C/C		2	2	2	G
NS	364155	JOINT / W/AIR SUSPENSION / W/2 HOLES .344 O / 4 3/8" x W/3 1/4" C/C From SERVICE		1	1	1	G
NS	500810	WASHER LO SPT 12.2x21.1x2.5 Z050		2	2	2	G
NS	500480	WASHER LO SPT .443x.779x.109 Z050		2	2	2	G

		Date:07/2024	PAGE:Y2-1822-10

DRIVER'S SEAT - "ISRI" - 6000/515 & 6500/515

Item#	Part	Description	XLII 45	XLII MTH40	XLII MTH45	XLII MTH45E	NOTES
NS	500445	WASHER FL .437x1.000x.083 Z050		2	2	2	G
NS	5001365	SCREW CAP HEX M12-1.75x30 G10.9 DP		2	2	2	G
NS	641507	UNION / PUSH-IN FITTING / #4 x 6MM NP	1	1	1	1	
NS	641092	UNION TEE / NTA FITTING / #4x#4x#4 BR	1	1	1	1	
NS	867958	ADAPTOR	1	1	1	1	
NS	868125	UNION 4MM/4MM	1	1	1	1	
NS	868128	UNION 6MM/4MM	1	1	1	1	
NS	868833	AIR PIPE CONNECTOR SML	AR	AR	AR	AR	
		A) W/SEAT #860433					
		B) W/860853, 860854, 860912 & 860913					
		C) W/HOSE & HARDWARE					
		D) W/BUTTON					
		E) THIS SEAT IS COMPLETLY ASSY W/COVERING, ARMREST, HEATING PAD & SAFETY BELT (SPECIFY COLOR)					
		F) TO FIX BASE TO FLOOR					
		G) TO FIX SAFETY BELT TO SEAT					
		1) NOT SOLD SEPARATELY					

		Date:07/2024	PAGE:Y2-1822-50
DRIVER'S SEAT "ISRI" ASSY			

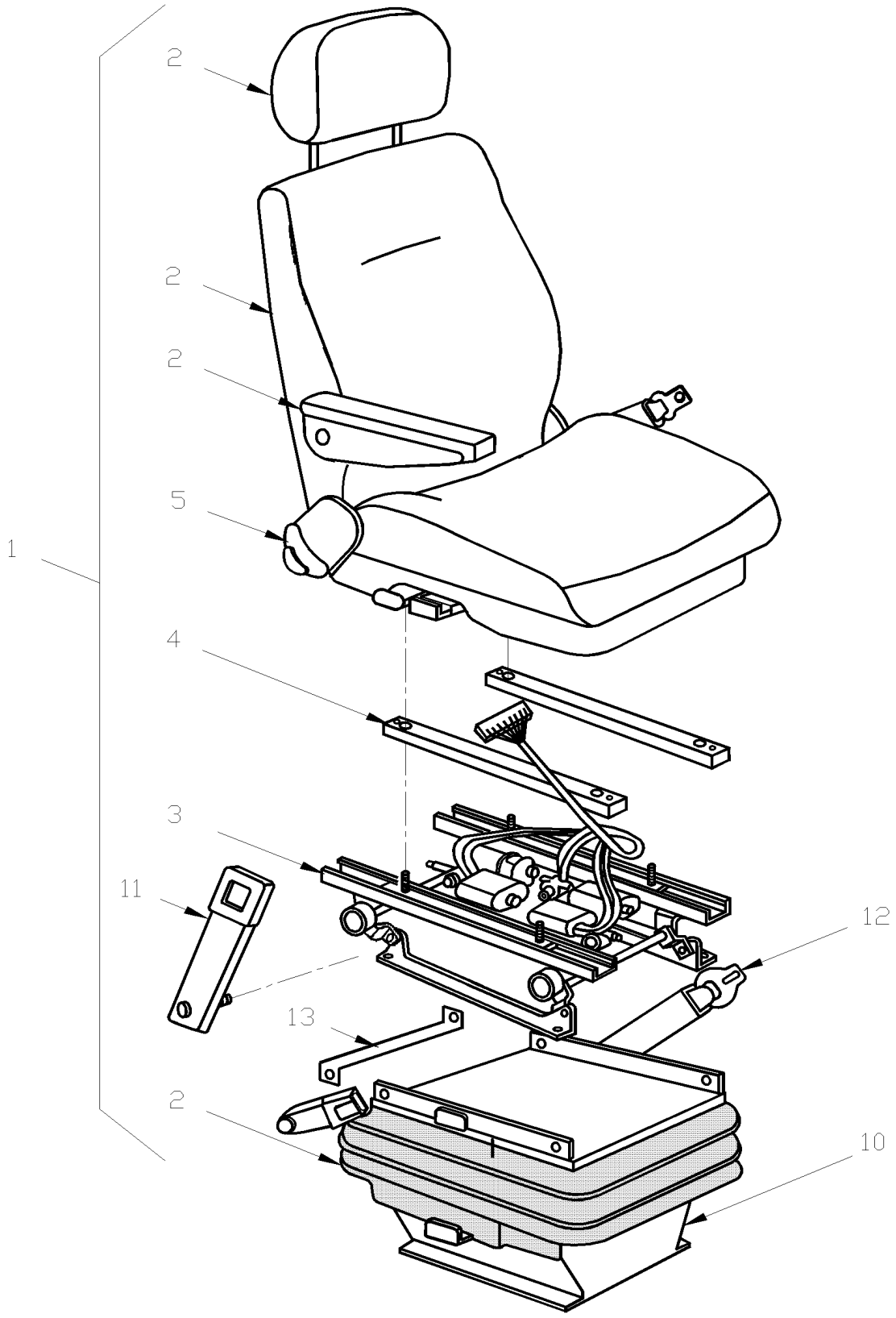

		Date:07/2024	PAGE:Y2-1822-50

DRIVER'S SEAT "ISRI" ASSY

Item#	Part	Description	XLII 45	XLII MTH40	XLII MTH45	XLII MTH45E	NOTES
1	862319	DRIVER`S SEAT - "ISRI" - MODEL 6000/525 / ELECTRIC / AIR SUSPENSION / R.H. CONTROL & LUMBAR SUPPORTS		1	1	1	C
1	860855	DRIVER`S SEAT - "ISRI" - MODEL 6000/525 / ELECTRIC / AIR SUSPENSION / R.H.		1	1	1	B
2	**Y2-1822-10**	**DRIVER'S SEAT - "ISRI" - 6000/515 & 6500/515**					
3	860728	BASE ELECTRICAL ASSY		1	1	1	
4	860727	TUBE ADAPTOR		2	2	2	
5	861081	FRAME ASSY SEAT / W/O MEMORY ELECTRICAL SEAT		1	1	1	
10	363422	BASE DRIVER'S SEAT / W "ISRI" "ELECTRIC / 25.4MM HEIGHT / 1" To 2-7914		1	1	1	
10	364018	BASE 1" / W/ELECTRICAL SEAT ONLY From 2-7915		1	1	1	
10	363454	PLATE SEAT ADAPTOR 54MM X 242MM From 2-7915		1	1	1	
NS	362549	SPACER / STRUCTURE & BASE / 27MM		4	4	4	
11	860607	STIFF BUCKLE IN BOOT		1	1	1	
11	861115	SLEEVE COVERING		1	1	1	
12	860977	BELT SEAT		1	1	1	
13	363104	BAR ICP / W/SEAT MODEL 6500/ELECTRIC To Y-7232		1	1	1	
13	363944	BAR ICP / W/SEAT MODEL 6500 From Y-7233		1	1	1	
NS	Call order desk	LOWER SEAT BACK		1	1	1	P
NS	363410	JOINT / W/AIR SUSPENSION / W/2 HOLES .562 O.D / 3 1/8" x W/2 1/8 C/C"		1	1	1	A
14	641507	UNION / PUSH-IN FITTING / #4 x 6MM NP		1	1	1	
14	641092	UNION TEE / NTA FITTING / #4x#4x#4 BR		1	1	1	
		A) USE WITH CO-PILOTE SEAT CURBSIDE INSTALLATION					
		B) THOSE SEATS ARE COMPLETE ASSY W/BLACK COVERING, LARGE ARMREST & HEADREST FOR FACTORY DELIVERY.					
		C) WITHOUT COVERING					
		P) CALL ORDER DESK FOR SPECIFIC APPLICATION (V.I.N.)					

		Date:07/2024	PAGE:Y2-1823-00
DRIVER'S SEAT - "RECARO" - ERGO-COACH			

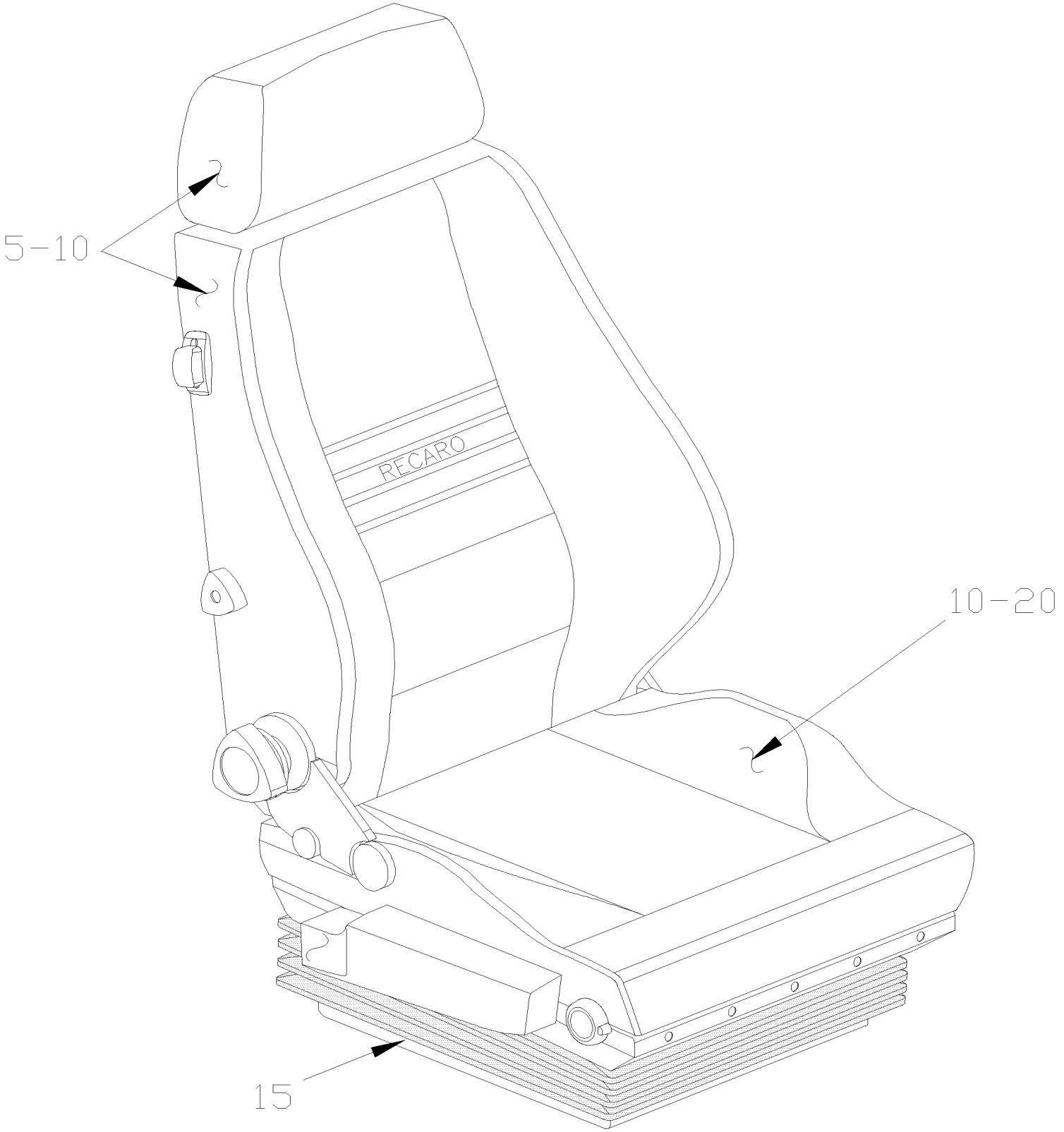

		Date:07/2024	PAGE:Y2-1823-00

DRIVER'S SEAT - "RECARO" - ERGO-COACH

Item#	Part	Description	XLII 45	XLII MTH40	XLII MTH45	XLII MTH45E	NOTES
	861936	DRIVER'S SEAT - "RECARO" - COACH-ERGO	1				
5	**Y2-1823-10**	**. BACKREST ASSY - "RECARO" - ERGO-COACH**					
10	**Y2-1823-15**	**. SEAT COVER & FOAM - "RECARO" - ERGO-COACH**					
15	**Y2-1823-20**	**. SUSPENSION & RISER - "RECARO" - ERGO-COACH**					
20	**Y2-1823-25**	**. SEAT CUSHION FRAME - "RECARO" - ERGO-COACH**					
25	**Y2-1823-30**	**. ARMREST - "RECARO" - ERGO-COACH**					

		Date:07/2024	PAGE:Y2-1823-10
BACKREST ASSY - "RECARO" - ERGO-COACH			

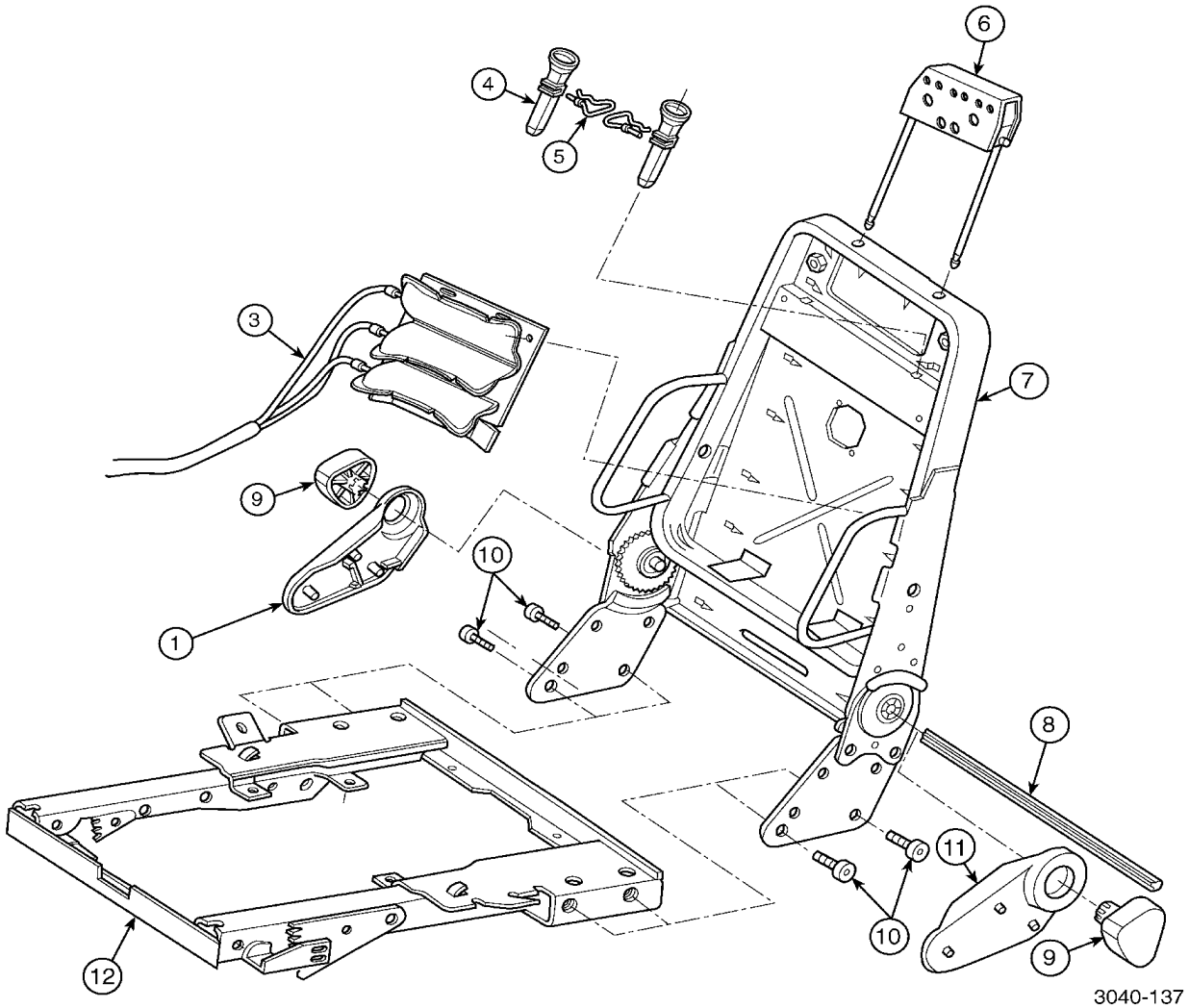

		Date:07/2024	PAGE:Y2-1823-10
BACKREST ASSY - "RECARO" - ERGO-COACH			

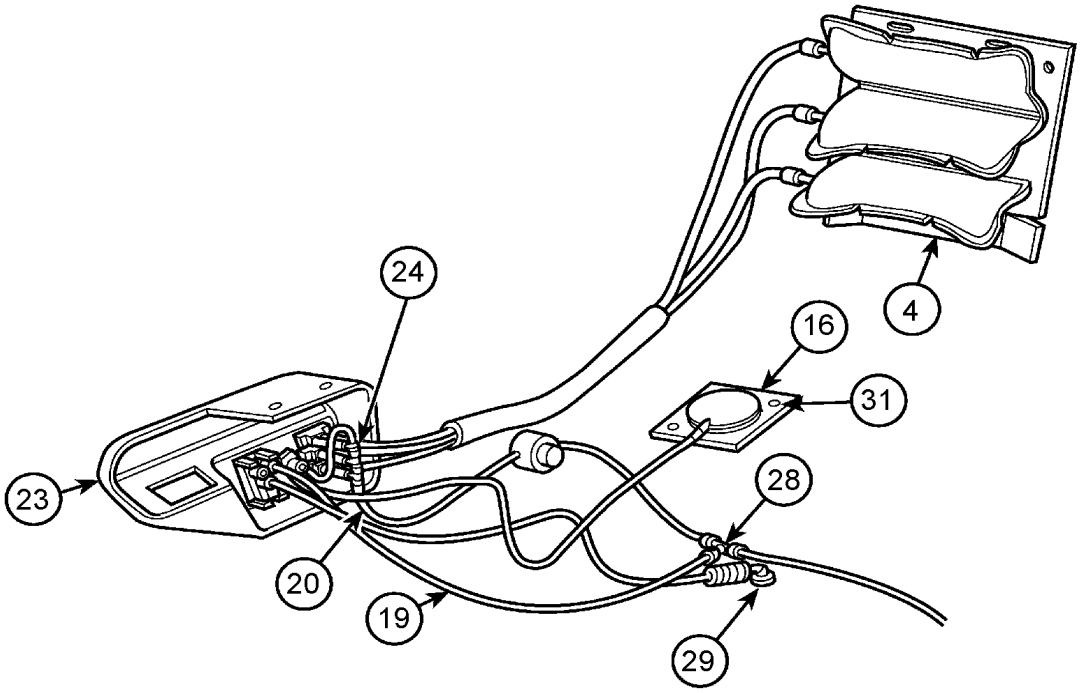

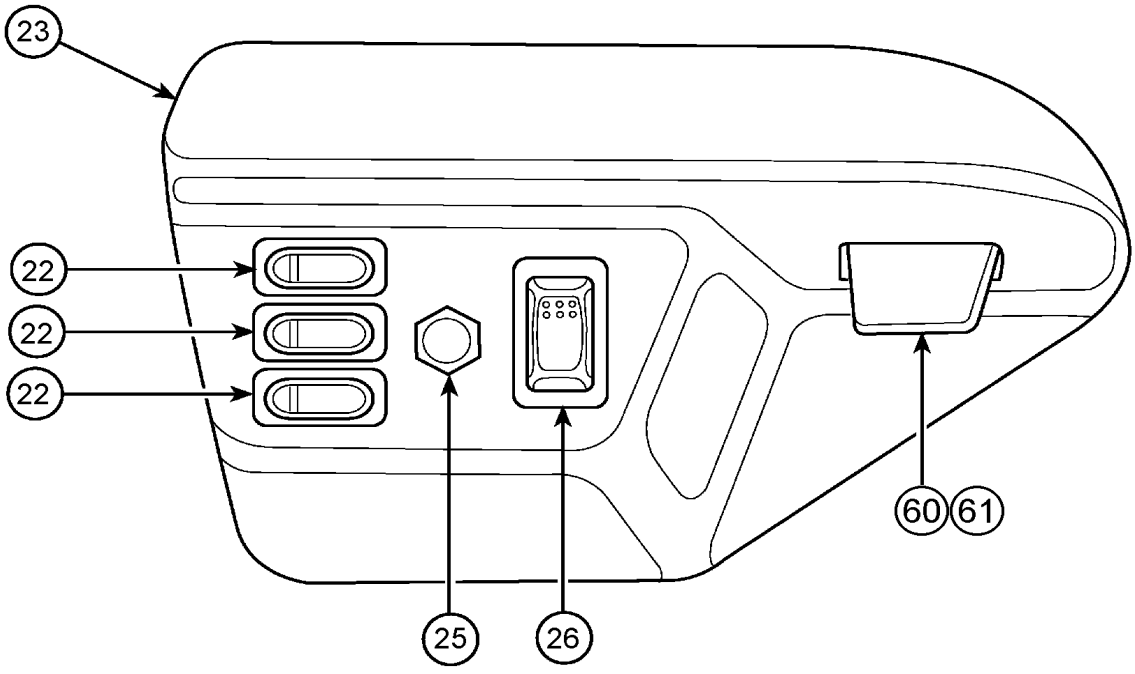

		Date:07/2024	PAGE:Y2-1823-10
BACKREST ASSY - "RECARO" - ERGO-COACH			

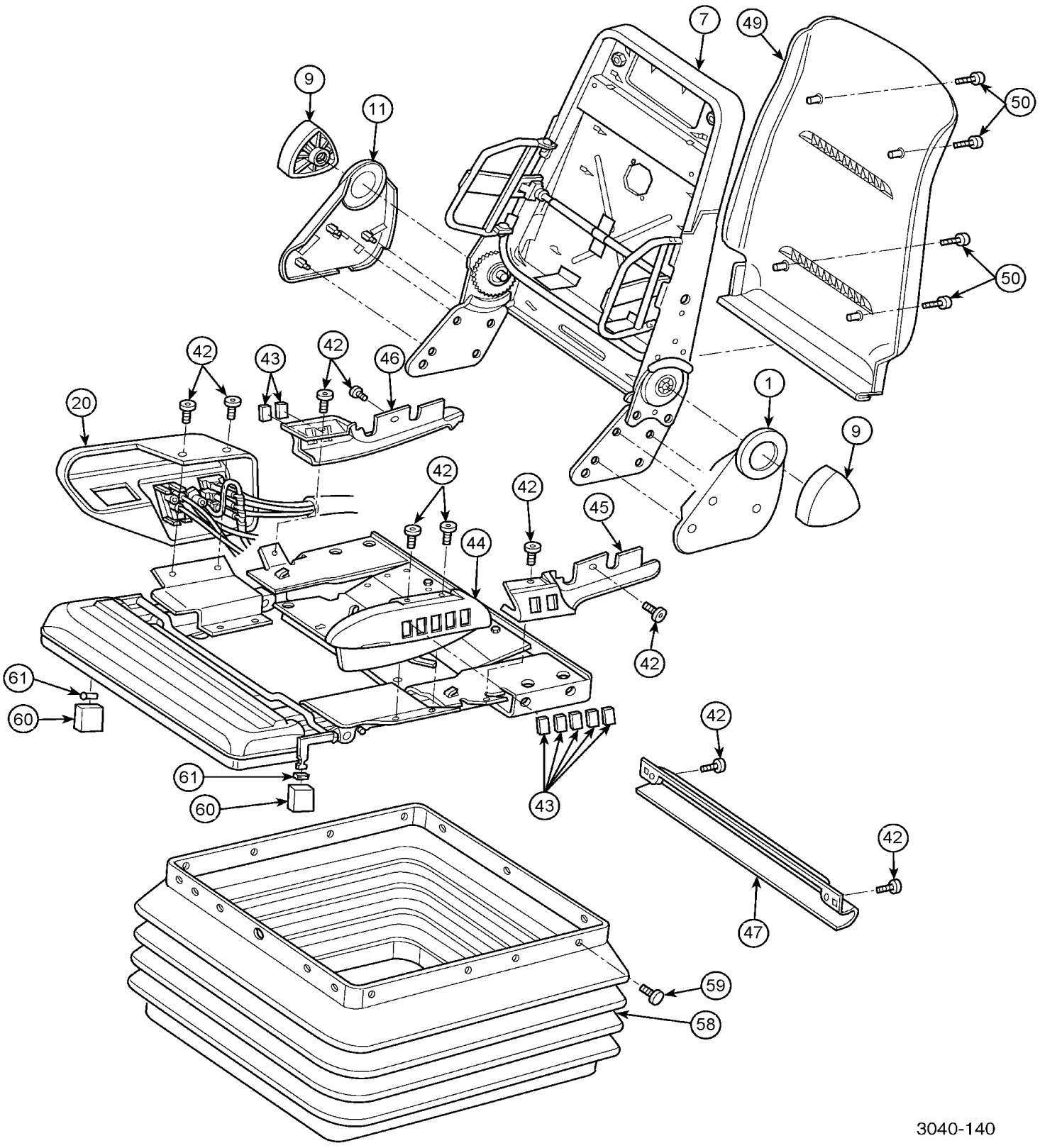

		Date:07/2024	PAGE:Y2-1823-10

BACKREST ASSY - "RECARO" - ERGO-COACH

Item#	Part	Description	XLII 45	XLII MTH40	XLII MTH45	XLII MTH45E	NOTES
1	Call order desk	COVER MANUAL RECLINE L.H.	1				P
3	868613	3 CELL LUMBAR	1				
4	Call order desk	HEADREST ASSY	1				P
4	Call order desk	. FRAME HEADREST	1				P
NS	Call order desk	. BUSHING HEADREST ROD PLASTIC	4				P
NS	Call order desk	. HEADREST ROD 307MM	2				P
4	Call order desk	. HEADREST COVER ASSY	1				P
NS	N8891971	. RETAINING STRIP	2				
NS	Call order desk	. BOLT M8X25	2				P
NS	N8882304	. NUT, LOCK	2				
5	N8886938	. TORSION SPRING	2				
5	N8886939	. SLEEVE	2				
6	N8886937	. GUIDE TUBE	2				
6	Call order desk	RETAINING CLIP, LOCK WASHER	2				P
7	Call order desk	BACK FRAME ASSY	1				P
8	Call order desk	ROD CONNECTING RECLINER	1				P
NS	Call order desk	BRACKET RECLINER STOP 12/25 DEG	1				P
NS	Call order desk	BOLT M8	2				P
9	Call order desk	HANDWHEEL	2				P
10	N8882373	SCREW M6-1.0x20	4				
11	Call order desk	COVER MANUAL RECLINE R.H.	1				P
12	Call order desk	RETAINING CLIP, LOCK WASHER	2				P
16	N8890756	ACTUATOR: AUTO BLADDER-CONTROL	1				
19	N8890744	TUBING 1/4" OD	1				
20	N8890720	CONTROL ASSY FRONT RH	1				
20	868612	. RUBBER TUBING 1/4 " OD	AR				
22	N8891008	. SWITCH PNEUMATIC LUMBAR	3				
23	868605	. CONTROL PANEL	1				
24	Call order desk	. AIR FITTING 1/8"	1				P
25	868600	. SWITCH HIGH PRESSURE	1				
26	N8891009	. SWITCH AUTO ACTUATOR	1				
28	Call order desk	AIR FITTING 1/4"	1				P
29	868597	FITTING 45 DEG 1/8 MALE NPT	1				
31	N8800444	RETAINER	2				
NS	G1090493	FITTING 1/4"X1/4" UNION	1				
41	N8890720	CONTROL ASSY FRONT RH	1				
42	N8887256	SCREW	8				
43	N8887257	COVER PLATE SWITCH	9				
44	N8887260	CONTROL PANEL / FRONT L.H.	1				
45	N8800437	CONTROL PANEL / REAR L.H.	1				
46	N8800438	CONTROL PANEL / REAR R.H.	1				
47	N8887262	CABLE HOUSING REAR	1				

		Date:07/2024	PAGE:Y2-1823-10

BACKREST ASSY - "RECARO" - ERGO-COACH

Item#	Part	Description	XLII 45	XLII MTH40	XLII MTH45	XLII MTH45E	NOTES
49	N8890725	BACKREST COVER KIT	1				
49	Call order desk	. COVER BACK PANEL	1				P
50	Call order desk	. SCREW BACK PANEL	1				P
58	G1094197	BOOT ASSY SUSPENSION	1				
. NS	N8882340	. PLASTIC RIVET	QR				
59	N8882340	PLASTIC RIVET	23				
60	868579	KNOB KIT	1				
60	N8882395	. CLIP	2				
61	N8887258	. KNOB	2				
NS	N8890741	PNEUMATIC ASSY KIT	1				
NS	N8887345	. TIE STRAP	2				
NS	N8880620	. VINYL EDGE PROTECTOR	AR				
NS	G1090493	. FITTING 1/4"X1/4" UNION	1				
NS	N8890744	. TUBING 1/4" OD	1				
NS	868612	. RUBBER TUBING 1/4 " OD	AR				
NS	Call order desk	. REGULATOR MONNIER 10PSI	1				P
NS	Call order desk	. AIR FITTING 1/4"	1				P
NS	N8890748	. AIR FITTING 10-32 THREAD	1				
NS	Call order desk	. AIR FITTING 10-32 THREAD	1				P
NS	N8887306	. SCREW M5-0.8x10	1				
NS	Call order desk	. TUBING NYLON 12 BLACK	AR				P
NS	Call order desk	. ERGO AIRLINE ROUTING	1				P
NS	Call order desk	. INSTALLATION INSTRUCTION AIR LINE	1				P
NS	Call order desk	STICKER RECARO LOGO	1				P
NS	N8890749	KIT BACKREST ASSY	1				A
NS	N8890750	KIT RECLINING STOP ASM	1				
NS	Call order desk	. BRACKET RECLINER STOP 12/25 DEG	1				P
NS	Call order desk	. BOLT M8	2				P
		A) INCLUDE ITEMS #5, 6, 7, 8 & 10					
		P) CALL ORDER DESK FOR SPECIFIC APPLICATION (V.I.N.)					

		Date:07/2024	PAGE:Y2-1823-15
SEAT COVER & FOAM - "RECARO" - ERGO-COACH			

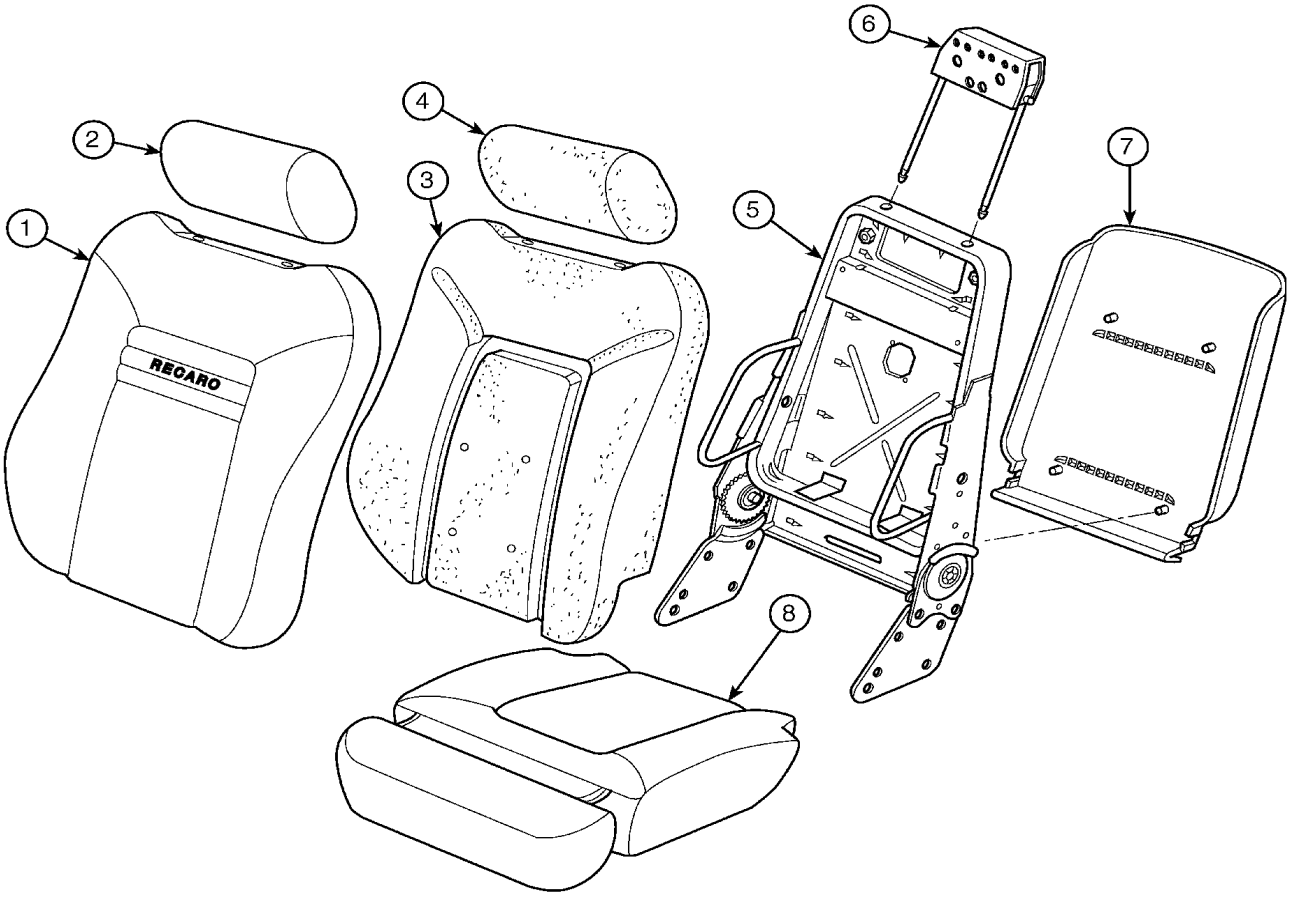

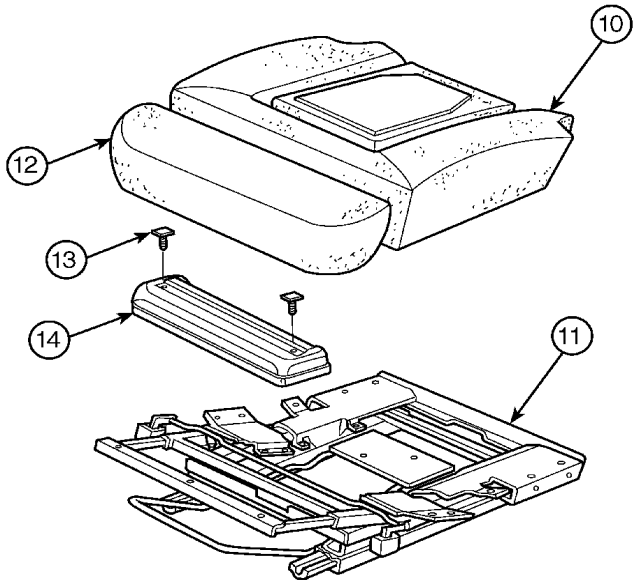

		Date:07/2024	PAGE:Y2-1823-15

SEAT COVER & FOAM - "RECARO" - ERGO-COACH

Item#	Part	Description	XLII 45	XLII MTH40	XLII MTH45	XLII MTH45E	NOTES
1	Call order desk	SEATBACK COVER ASSY	1				P
2	Call order desk	HEADREST COVER ASSY	1				P
3	N8891359	FOAM BACKREST	1				
4	19503099	FOAM HEADREST	1				
5	**Y2-1823-10**	**BACKREST ASSY - "RECARO" - ERGO-COACH**					
6	**Y2-1823-25**	**SEAT CUSHION FRAME - "RECARO" - ERGO-COACH**					
8	Call order desk	SEAT CUSHION COVER ASSY	1				P
10	N9999062	FOAM SEAT CUSHION	1				
12	19503560	THIGH FOAM SUPPORT	1				
13	868641	FRAME TIGH EXTENSION	1				
14	N8887358	WASHER BOLT	2				
		P) CALL ORDER DESK FOR SPECIFIC APPLICATION (V.I.N.)					

		Date:07/2024	PAGE:Y2-1823-20
SUSPENSION & RISER - "RECARO" - ERGO-COACH			

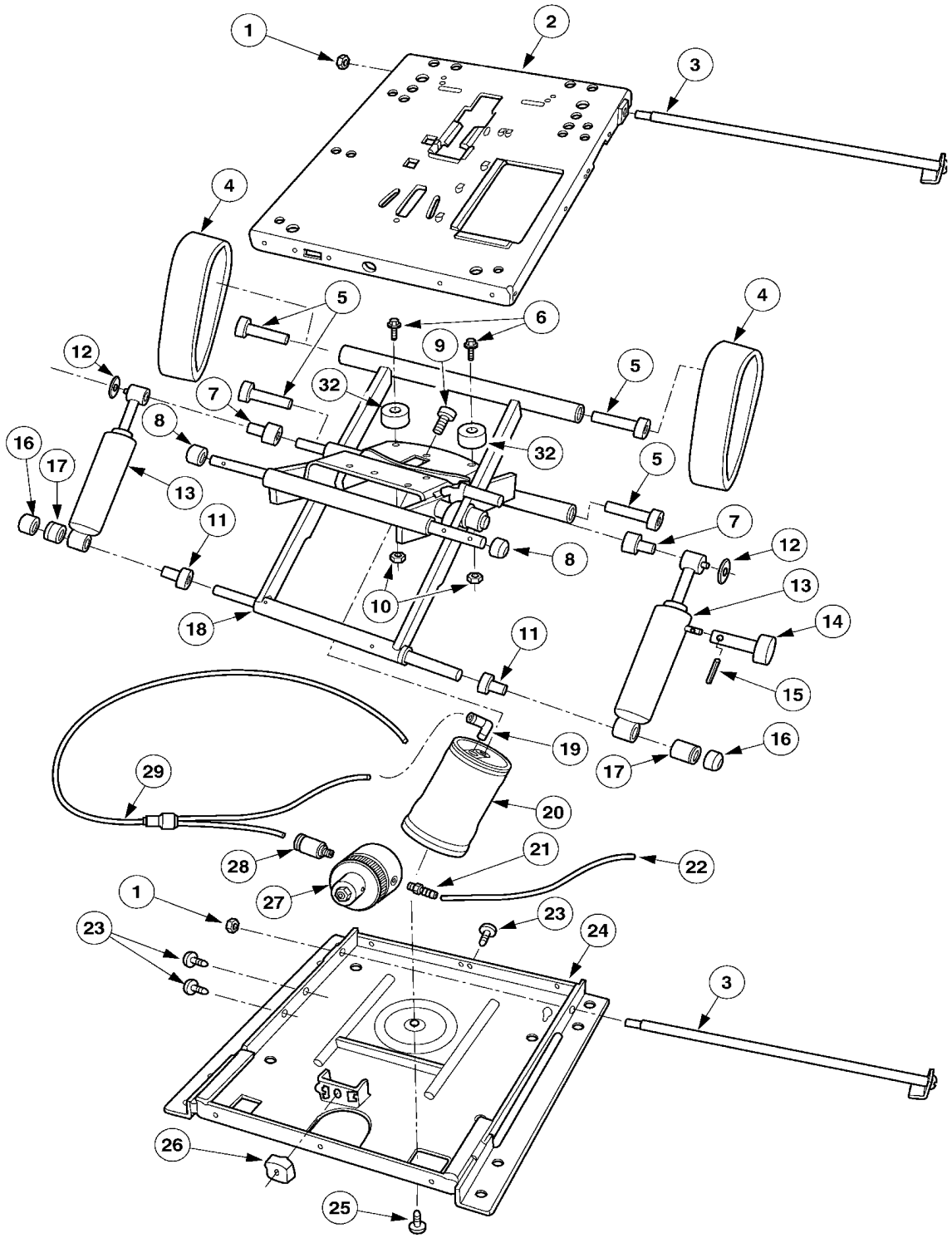

		Date:07/2024	PAGE:Y2-1823-20
SUSPENSION & RISER - "RECARO" - ERGO-COACH			

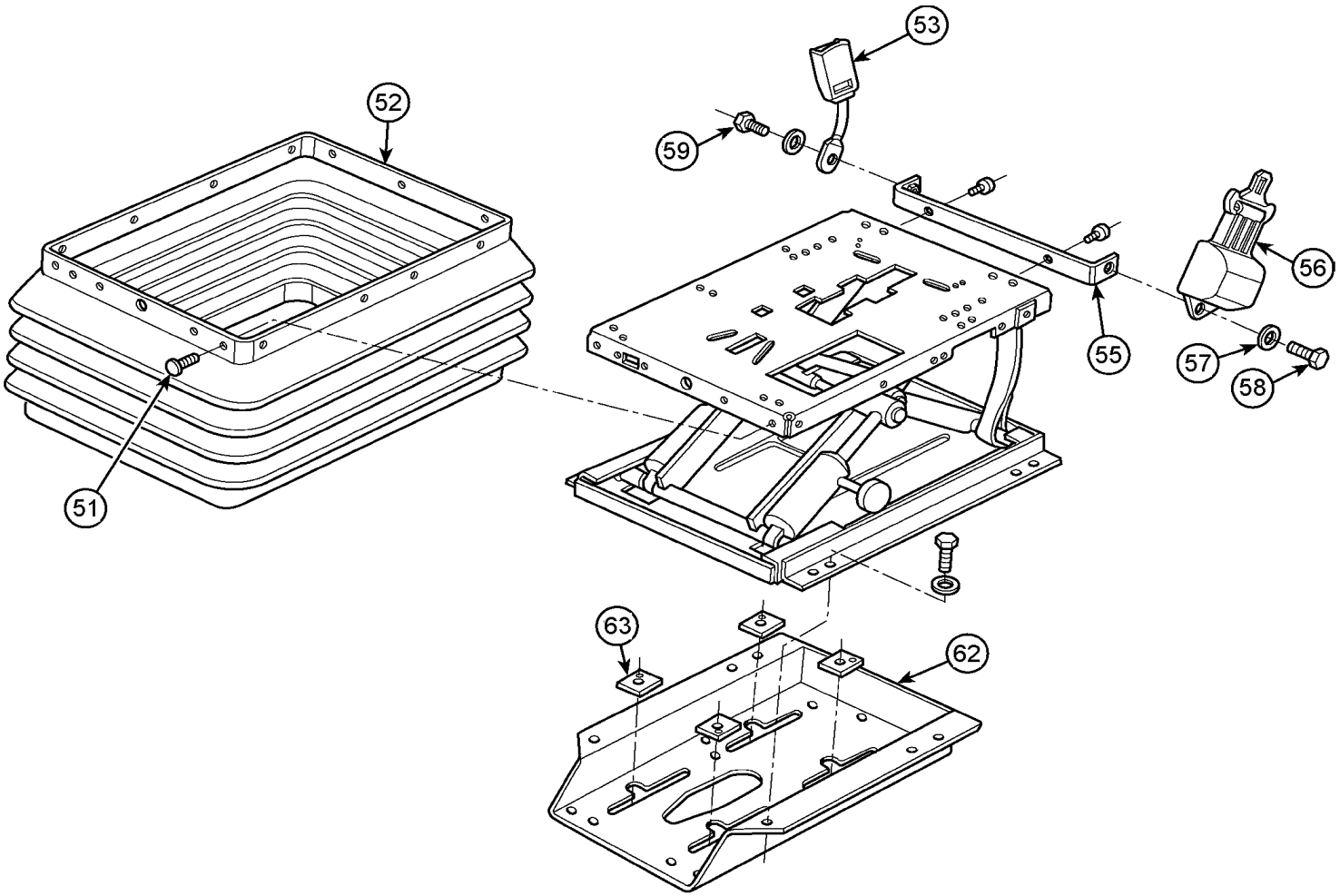

		Date:07/2024	PAGE:Y2-1823-20

SUSPENSION & RISER - "RECARO" - ERGO-COACH

Item#	Part	Description	XLII 45	XLII MTH40	XLII MTH45	XLII MTH45E	NOTES
1	N.P.N.	NUT HEX 3/8-16 CENTER LOCK	2				4
2	N8890734	UPPER HOUSING KIT	1				
3	N8890738	WELDMENT SHAFT	2				
4	N8890736	TETHER	2				
5	Call order desk	TUBE BEARING	4				P
6	Call order desk	SCREW MA 1/4-20x5/8	1				P
7	Call order desk	BEARING UPPER SHOCK	2				P
8	Call order desk	ROLLER	2				P
9	Call order desk	SCREW CAP HEX 3/8-16x1/2	1				P
10	Call order desk	NUT HEX SLO 1/4-20	1				P
11	Call order desk	BEARING LOWERR SHOCK	2				P
12	Call order desk	PUSHNUT .5 STUD	2				P
13	N.P.N.	SHOCK FIXED SUSPENSION	1				4
14	Call order desk	KNOB AJUSTEMENT	1				P
15	Call order desk	PIN ROLL 1/8x5/8	1				P
16	Call order desk	ROLLER	2				P
17	Call order desk	SPACER SHORT	1				P
17	Call order desk	SPACER LONG	1				P
18	Call order desk	SCISSOR	1				P
19	868597	FITTING 45 DEG 1/8 MALE NPT	1				
20	868929	AIR SPRING SUSPENSION	1				
21	N8890748	AIR FITTING 10-32 THREAD	1				
22	Call order desk	TUBING NYLON 12 BLACK	AR				P
23	N.P.N.	CLIP	1				4
24	N8890735	LOWER HOUSING KIT	1				
25	Call order desk	SCREW 3/8-16x3/4	1				P
26	868596	BUMPER KIT	1				
27	Call order desk	REGULATOR MONNIER 10PSI	1				P
28	Call order desk	AIR FITTING 10-32 THREAD	1				P
29	N8890744	TUBING 1/4" OD	AR				
32	Call order desk	BUMPER	1				P
51	G1094197	BOOT ASSY SUSPENSION	1				
. NS	N8882340	. PLASTIC RIVET	QR				
52	N8882340	. PLASTIC RIVET	23				
53	N8891356	2 PT RH SEATBELT ASM	1				
53	Call order desk	. BUCKLE ASSY	1				P
55	G1094196	. SUPPORT KIT 2PT SEAT BELT ATTACHMENT	1				
56	N8893881	. SEAT BELT	1				
57	Call order desk	. WASHER FL 23.5x12x1.7	2				P
58	Call order desk	. SCREW SHR CAP HEX 7/16-20x1 3/4	1				P
59	Call order desk	. SCREW CAP HEX 7/16-20x1 1/2	1				P
NS	Call order desk	. BRACKET-SWIVEL	1				P

		Date:07/2024	PAGE:Y2-1823-20

SUSPENSION & RISER - "RECARO" - ERGO-COACH

Item#	Part	Description	XLII 45	XLII MTH40	XLII MTH45	XLII MTH45E	NOTES
NS	Call order desk	. WASHER FL 7/16 ID x 1.5 OD .437x1.500	1				P
62	Call order desk	RISER 3" CRS KIT	1				P
62	Call order desk	. RISER 3" ASSY	1				P
NS	Call order desk	. LOOSE PARTS PACKAGE	1				P
63	Call order desk	. WASHER FL SQ 3.000	1				P
70	868589	KIT AIR SPRING ERGO	1				A
71	868591	KIT FIXED SHOCK ASM	1				B
72	868592	SHAFT SPACER BEARING SUSPENSION	1				C
73	N8890737	SCISSORS ASM KIT	1				D
74	N8890739	AIR LINE PROTECTION ABRASION KIT	1				
		A) INCLUDE ITEMS #9, 19, 20 & 25					
		B) INCLUDE ITEMS #1, 7, 11, 12, 13, 14 & 15					
		C) INCLUDE ITEMS #1, 3, 5, 7, 8, 11, 12, 16 & 17					
		D) INCLUDE ITEMS #1, 3, 5, 6, 7, 8, 10, 11, 12, 16, 17, 18 & 32					
		4) NO PARTS NUMBER					
		P) CALL ORDER DESK FOR SPECIFIC APPLICATION (V.I.N.)					

		Date:07/2024	PAGE:Y2-1823-25
SEAT CUSHION FRAME - "RECARO" - ERGO-COACH			

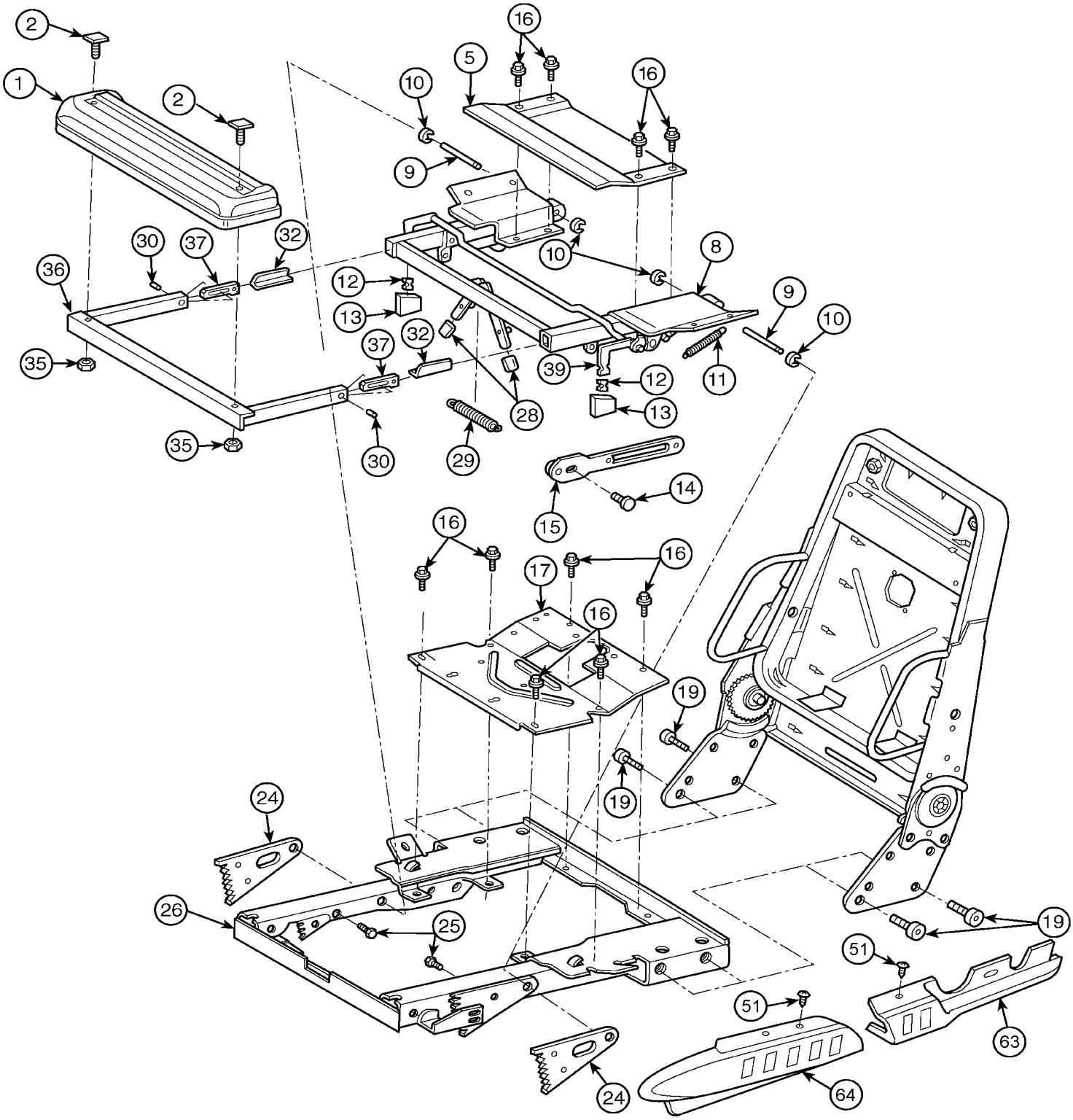

		Date:07/2024	PAGE:Y2-1823-25
SEAT CUSHION FRAME - "RECARO" - ERGO-COACH			

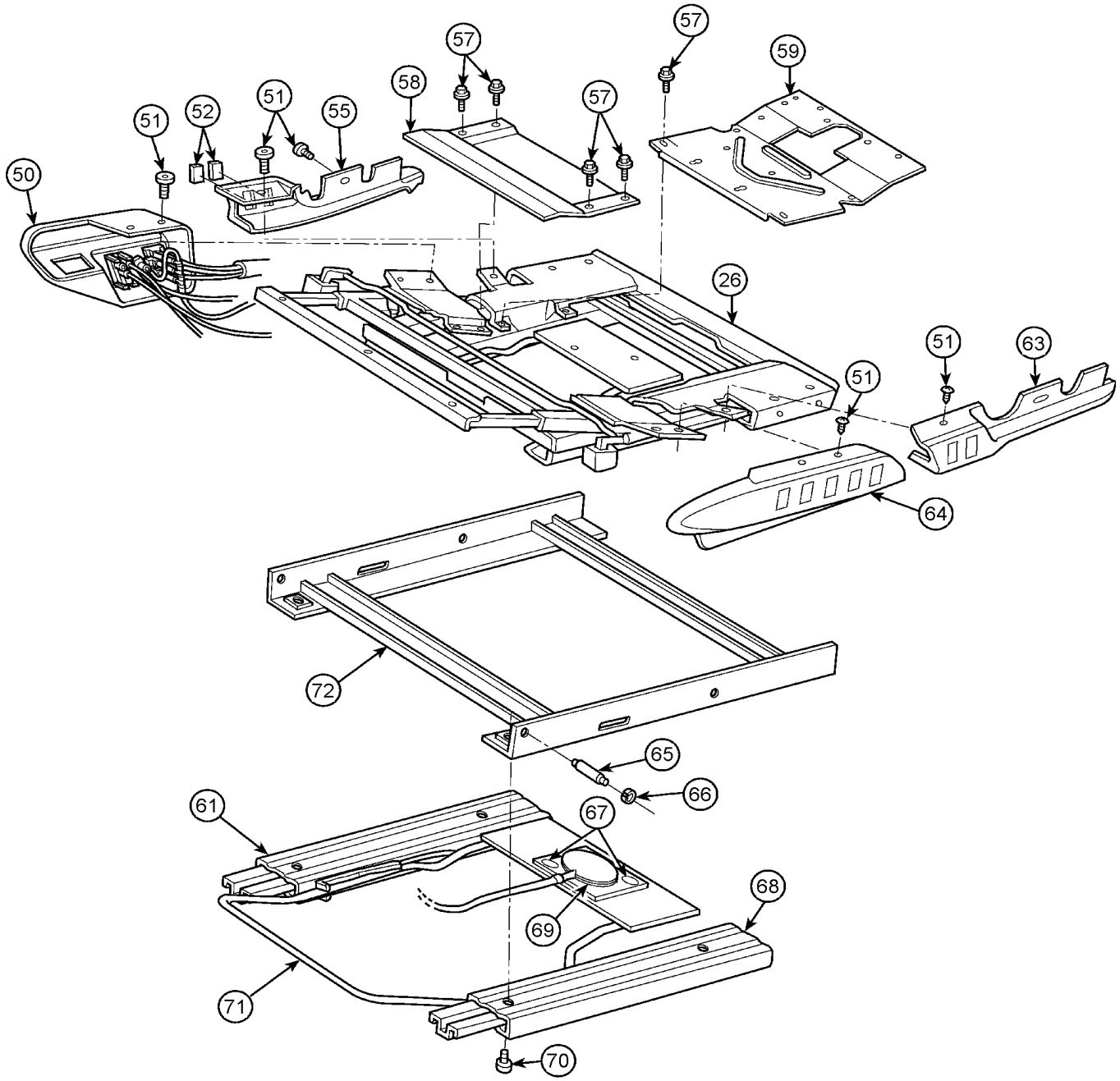

		Date:07/2024	PAGE:Y2-1823-25

SEAT CUSHION FRAME - "RECARO" - ERGO-COACH

Item#	Part	Description	XLII 45	XLII MTH40	XLII MTH45	XLII MTH45E	NOTES
	G1094200	FRAME ASM CUSHION	1				
1	868641	. FRAME TIGH EXTENSION	1				
2	N8887358	. WASHER BOLT	2				
5	N8800400	. CUSHION PAN FRONT	1				
8	N8887365	. PLATE	1				
9	N8887375	. BOLT	2				
10	N8882381	. CLIP RETAINER	8				
11	N8887368	. SPRING	2				
12	N8882395	. CLIP	2				
13	N8887258	. KNOB	2				
14	N8887367	. SCREW	2				
15	N8887366	. RELEASE PLATE	2				
16	N8887306	. SCREW M5-0.8x10	12				
17	N8800399	. SEAT CUSHION PAN REAR	1				
19	N8882373	. SCREW M6-1.0x20	4				
24	N8887362	. PIVOT PLATE	2				
25	N8887363	. SCREW	2				
26	Call order desk	. FRAME CUSHION ASSY	1				P
28	N8887369	. PLASTIC CAP	2				
29	N8887370	. SPRING	1				
30	N8887374	. BOLT	2				
32	N8887372	. GLIDING PART	2				
35	868643	. NUT M6	2				
36	N8887371	. TIGH EXTENSION	1				
37	N8887373	. PLASTIC GUIDE	2				
39	Call order desk	. LEVER, RAKE ADJUSTMENT	2				P
NS	Call order desk	. VELCRO LOOP	AR				P
NS	Call order desk	. PIN ATTACH 38.6MM	4				P
NS	N8887356	REPAIR KIT LENGHT ADJUSTMENT	1				A
50	**Y2-1823-10**	**BACKREST ASSY - "RECARO" - ERGO-COACH**					
51	N8887256	SCREW	8				
52	N8887257	COVER PLATE SWITCH	9				
55	N8890722	CONTROL PANEL / REAR R.H.	1				
57	N8887306	SCREW M5-0.8x10	12				
58	N8800400	CUSHION PAN FRONT	1				
59	G1094203	CUSHION PAN RR	1				
61	N8887269	TRACK RIGHT	1				
63	N8890721	CONTROL PANEL / REAR L.H.	1				
64	N8887260	CONTROL PANEL / FRONT L.H.	1				
65	Call order desk	PIN ATTACH 38.6MM	4				P
66	N8882381	CLIP RETAINER	8				
67	N8800444	RETAINER	2				

		Date:07/2024	PAGE:Y2-1823-25

SEAT CUSHION FRAME - "RECARO" - ERGO-COACH

Item#	Part	Description	XLII 45	XLII MTH40	XLII MTH45	XLII MTH45E	NOTES
68	N8887268	TRACK LEFT	1				
69	N8890756	ACTUATOR: AUTO BLADDER-CONTROL	1				
70	Call order desk	SCREW CAP HEXS M8-1.25x20 8.8	8				P
NS	N8882349	NUT M8	4				
NS	N8880629	WASHER 5/16	4				
71	N8890726	CENTER TRACK ACTUATOR	1				
72	N8890729	COUSHION FRAME ADAPTER KIT	1				
72	Call order desk	. BRACKET CUSHION FRONT ADAPTER L.H.	1				P
72	Call order desk	. BRACKET CUSHION FRONT ADAPTER R.H.	1				P
72	N8882381	. CLIP RETAINER	8				
72	Call order desk	. PIN ATTACH 38.6MM	4				P
		A) INCLUDE ITEMS #1, 2, 35					
		P) CALL ORDER DESK FOR SPECIFIC APPLICATION (V.I.N.)					

		Date:07/2024	PAGE:Y2-1823-30
ARMREST - "RECARO" - ERGO-COACH			

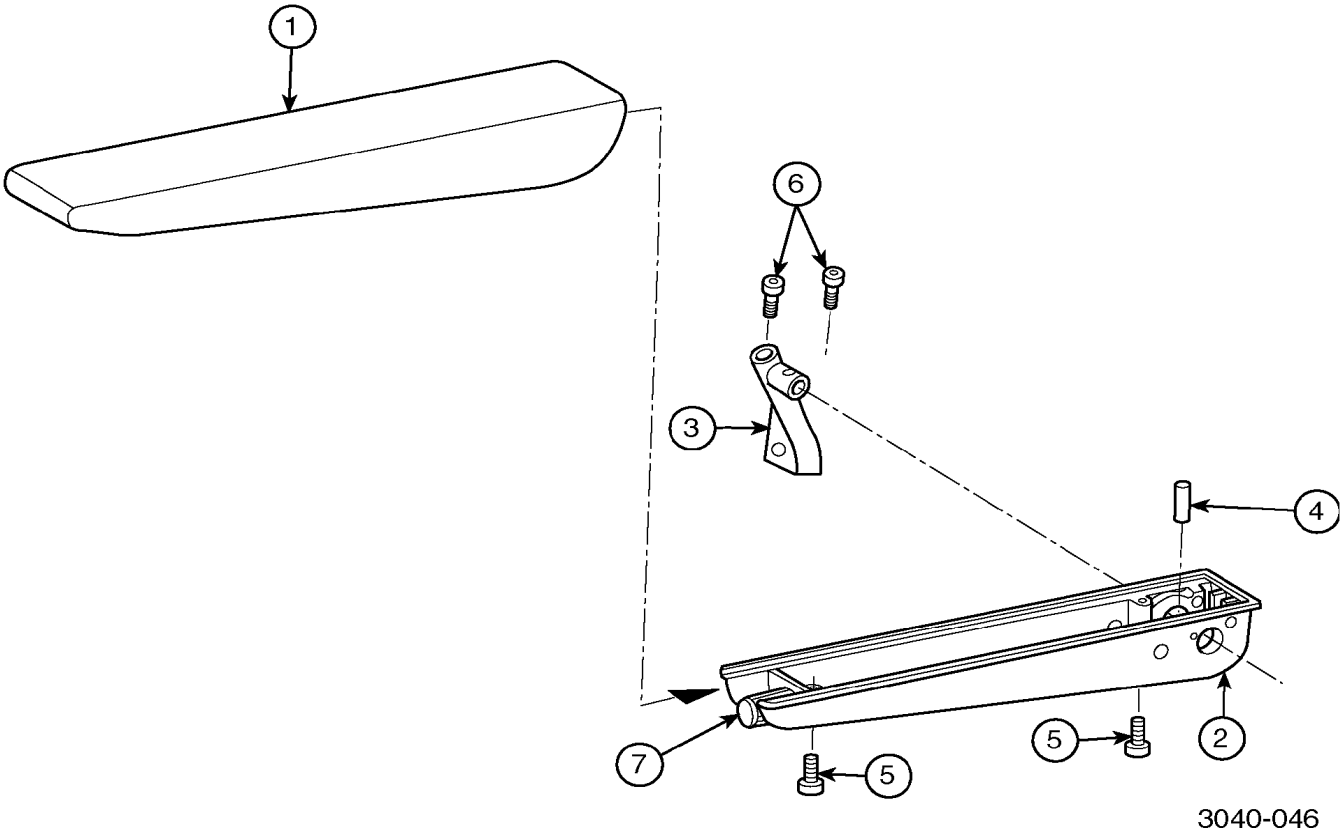

		Date:07/2024	PAGE:Y2-1823-30

ARMREST - "RECARO" - ERGO-COACH

Item#	Part	Description	XLII 45	XLII MTH40	XLII MTH45	XLII MTH45E	NOTES
	N8891363	ARMREST ASSY L.H.	1				
	N8891364	ARMREST ASSY R.H.	1				
1	N8891365	. FOAM ARMREST	1				
2	N8800125	. ARMREST FRAME	1				
3	N8891367	. BRACKET L.H.	1				
3	N8891368	. BRACKET R.H.	1				
4	N8800461	. RETAINING PIN DIN7343 10X40	1				
5	N8800462	. SCREW M4X16 DIN7085	2				
6	N8891371	. BOLT	2				
7	N8800468	. PLASTIC END KNOB	1				
8	N8891863	. SPACER	2				

		Date:07/2024	PAGE:Y2-1823-50
DRIVER'S SEAT - "USSC" - 9100ALX3			

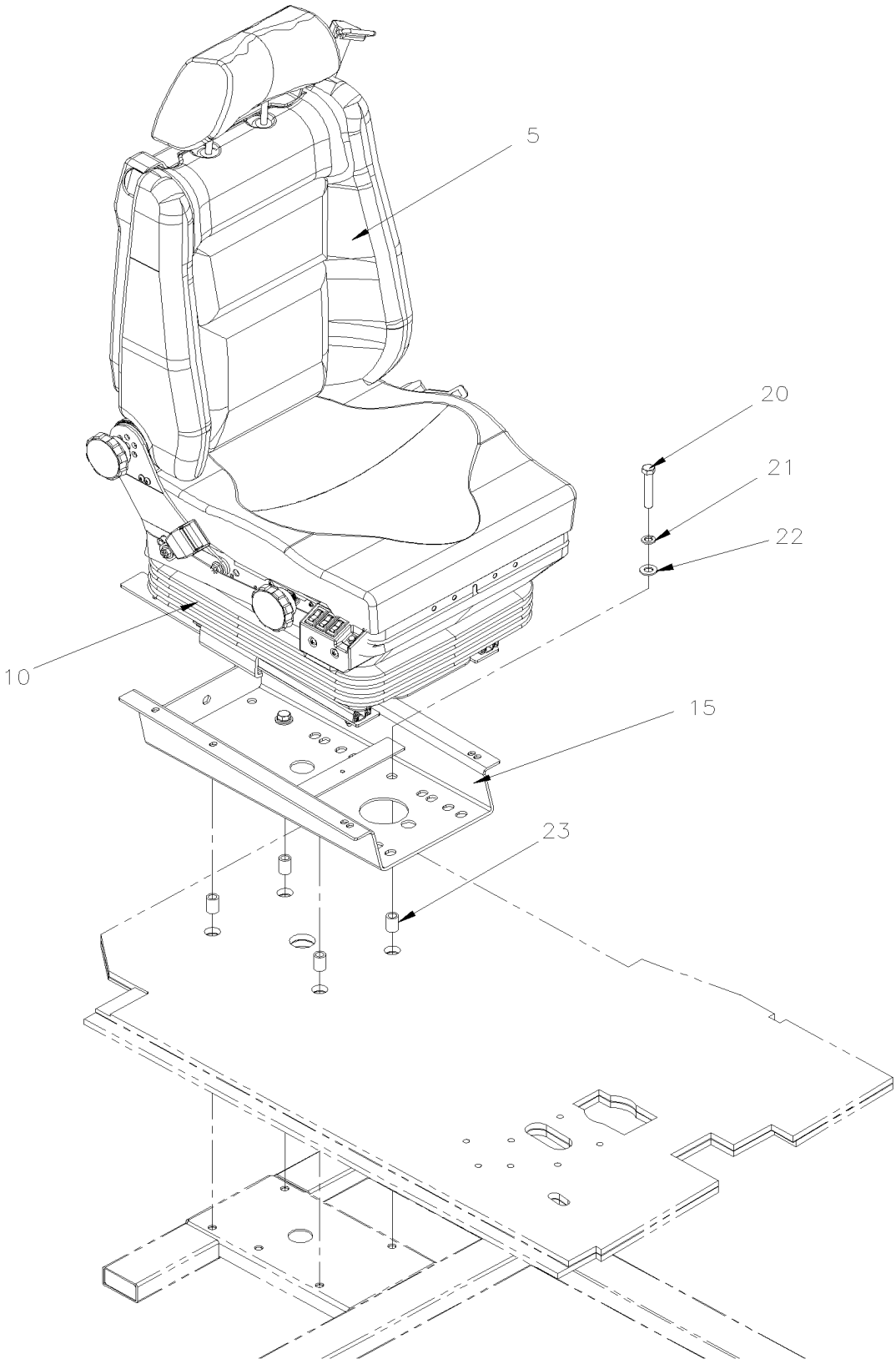

		Date:07/2024	PAGE:Y2-1823-50

DRIVER'S SEAT - "USSC" - 9100ALX3

Item#	Part	Description	XLII 45	XLII MTH40	XLII MTH45	XLII MTH45E	NOTES
	861821	DRIVER'S SEAT - "USSC" - MODEL 9100 ALX3	1				
	861832	DRIVER'S SEAT - "USSC" - MODEL 9100 ALX3	1				
	862098	DRIVER'S SEAT - "USSC" - MODEL 9100 ALX3	1				
5	**Y2-1823-60**	**. SEAT ASSY - "USSC" - 9100ALX3**					
10	**Y2-1823-70**	**. SUSPENSION ASSY - "USSC" - 9100ALX3**					
15	**Y2-1823-80**	**. BASE ASSY - "USSC" - 9100ALX3**					
20	5001862	SCREW CAP HEX M12-1.75x70 G10.9 N500	4				
21	500747	WASHER LO SPT 12.2x21.1x2.5 N500	4				
22	500958	WASHER FL .531x1.062x.095 SS	4				
23	362549	SPACER / STRUCTURE & BASE / 27MM	4				

		Date:07/2024	PAGE:Y2-1823-60
SEAT ASSY - "USSC" - 9100ALX3			

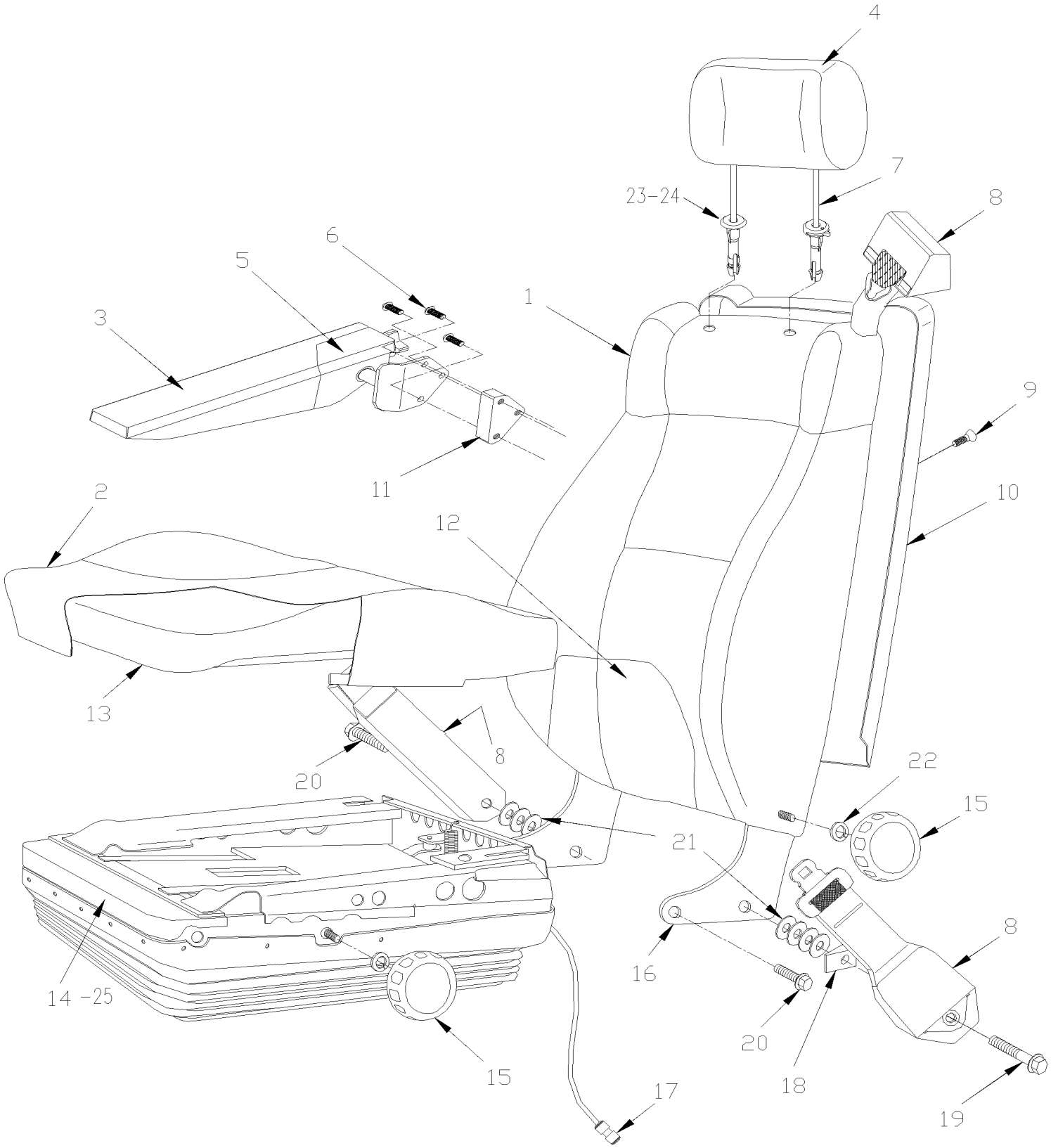

		Date:07/2024	PAGE:Y2-1823-60

SEAT ASSY - "USSC" - 9100ALX3

Item#	Part	Description	XLII 45	XLII MTH40	XLII MTH45	XLII MTH45E	NOTES
1	Call order desk	COVER BACKREST	1				P
1	Call order desk	BACKREST COVERING / S.C.C.	1				P
2	Call order desk	COVER CUSHION	1				P
2	Call order desk	CUSHION SEAT COVERING / S.C.C	1				P
3	Call order desk	COVER ARMREST	1				P
3	Call order desk	ARMREST PAD COVERING S.C.C.	2				P
4	Call order desk	COVER HEADREST	1				P
4	Call order desk	HEADREST COVERING / S.C.C.	1				P
5	866017	ARMREST FRONT L.H. W/OUT COVERING	1				
5	865417	ARMREST ADJUSTABLE WITHOUT COVERING PAD RH	1				
6	N8893510	SCREW M8-1.25x35	3				
7	N8887203	HEADREST ASSY	1				
7	N8887203	HEADREST ASSY	1				
8	N8891957	BELT 3PT ASS	1				
. NS	N8904553	. BUSHING	1				
8	864095	. BELT 3PT / SHOULDER RETRACTOR	1				
8	864096	. BELT 3PT / LAP RETRACTOR	1				
8	864097	. BELT 3PT / BUCKLE RECEPTOR 4 3/4	1				
9	N8887219	SCREW 1/4-20x3/4	2				
10	N8891951	BACKSHELL W/LOGO	1				
11	N8893511	ARMREST SHIM	2				
12	N8882987	FOAM BACKREST	1				
13	N8887209	CUSHION FOAM	1				
14	N8891953	SUSPENSION BASE ASSY W/FORMER VALVE	1				
14	Call order desk	SUSPENSION BASE ASSY W/CURRENT VALVE	1				P
15	N8882989	KNOB SEAT ADJUSTMENT W/FORMER VALVE	2				
16	N8891949	BACK BOLSTER	1				
17	N8882997	CONNECTOR	2				
18	N8887857	SPACER 1/2x1-1/8x5/8	2				
19	N8882962	SCREW CAP HEX 7/16-20X2.25	2				
20	N8882960	SCREW CAP HEX /7/16-20X1.5"	2				
21	N8882992	WASHER FLAT 7/16	7				
22	N8882967	WASHER, LOCK M10	2				
22	N8882988	NUT JAM M10X1.5	2				
23	N8893445	HEADREST PLUG	2				
24	N8891948	PIN HAIR - HEADREST .0725 DIA	2				
25	**Y2-1823-70**	**SUSPENSION ASSY - "USSC" - 9100ALX3**					
		P) CALL ORDER DESK FOR SPECIFIC APPLICATION (V.I.N.)					

		Date:07/2024	PAGE:Y2-1823-70
SUSPENSION ASSY - "USSC" - 9100ALX3			

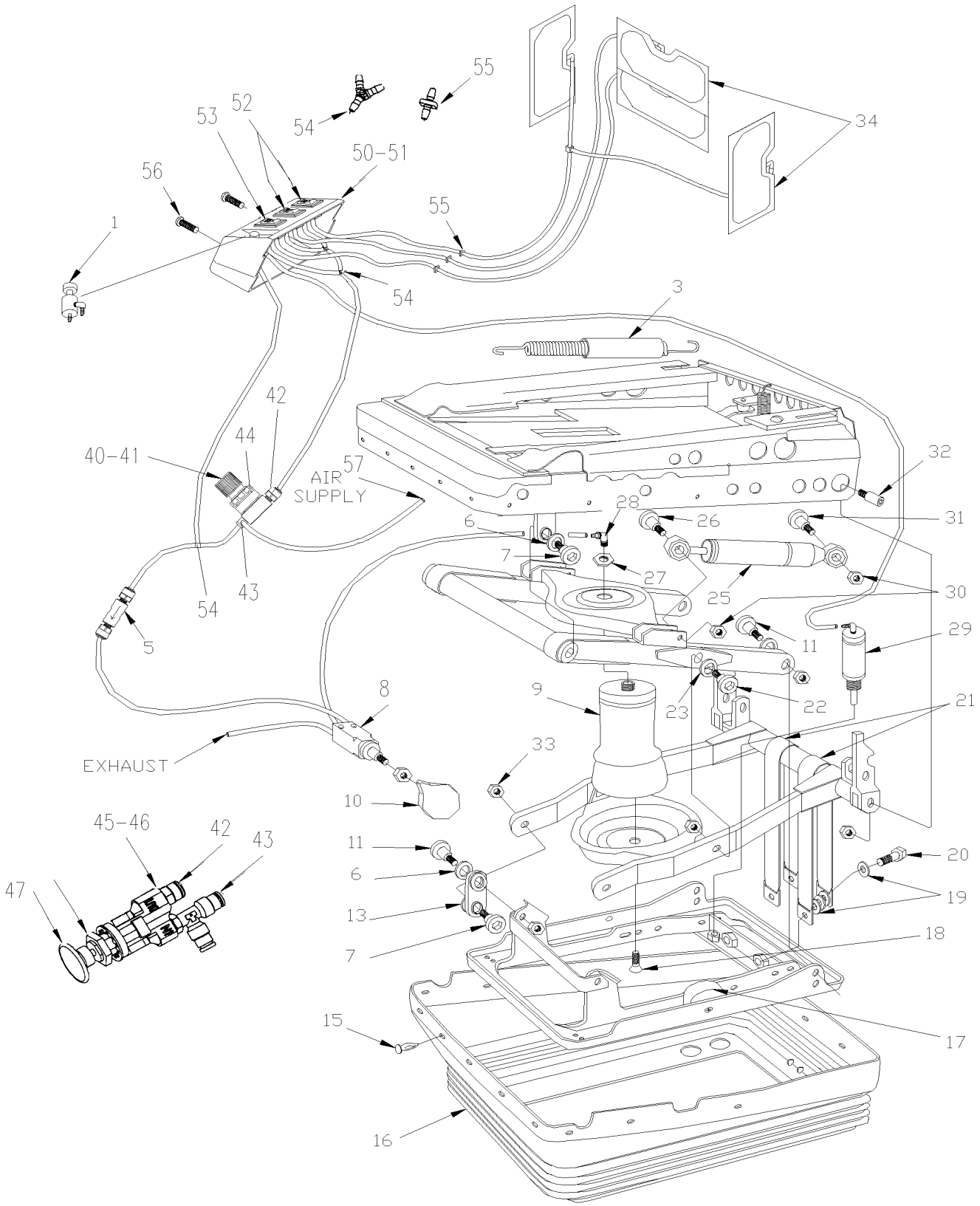

		Date:07/2024	PAGE:Y2-1823-70

SUSPENSION ASSY - "USSC" - 9100ALX3

Item#	Part	Description	XLII 45	XLII MTH40	XLII MTH45	XLII MTH45E	NOTES
1	N8887215	SLIDE BUTTON ASSY	1				
3	N8882994	SPRING	2				
5	N8887214	ONE WAY AIR VALVE	1				
6	N8883024	WASHER	1				
7	N8883022	BOLT	6				
8	N8883028	AIR VALVE ASSY W/FITTING HEIGHT CONTROL / FORMER	1				
9	N8883029	AIR BAG KIT	1				A
9	N8893448	. AIR BAG ONLY	1				
10	N8883026	KNOB ADJ / HEIGHT CONTROL / FORMER	1				
11	N8883025	BOLT	4				
13	N8883023	BUSHING	12				
15	N8883021	RIVET	30				
16	N8883020	BELLOW	1				
17	N8883018	RUBBER BUMPER	2				
18	N8883019	SCREW M10-1.5x16	1				
19	N8887858	WASHER 7/16	6				
20	N8882961	SCREW 7/16-20x1 1/4	2				
21	N8883017	STRAP 15"	2				
22	N8887205	BOLT	2				
23	N8887206	BUSHING 18MM	2				
25	N8893636	SHOCK ABSORBER, FIRM	1				
NS	868573	SPACER 14 OD X 8.1 ID	4				
26	N8882303	BOLT, HEX SHOCK M8 X 40	2				
27	N8883031	NUT	1				
28	N8883010	AIR BAG NIPPLE	1				
29	N8887216	SLIDE CYLINDER ASSY	1				
30	N8883015	NUT LOCK M8-1.25/GRD10/CZ	2				
31	N8883013	BOLT, M8 X 40	2				
32	N8883012	BOLT REAR BEARING	2				
33	N8883030	LOCK NUT 10M	1				
34	N8883036	LUMBAR AIR BAG ASSY	3				
34	N8891961	RIVET	6				
40	N8890644	AIR LUMBAR REGULATOR ASSY W/FITTING / W/AIR SLIDE CYLINDER	1				
40	N8887856	AIR LUMBAR REGULATOR ASSY W/FITTING	1				
41	N8883033	. AIR REGULATOR	1				
42	N8892738	. CONNECTOR 1/8 NPT	1				
43	N8893451	. MALE RUN TEE 1/8 NPT	1				
44	N8893452	. NUT RETAINER REGULATOR	1				
45	N8893439	AIR VALVE ASSY W/FITTING / HEIGHT CONTROL / CURRENT	1				
46	N8893450	. AIR VALVE / HEIGHT CONTROL / CURRENT	1				
47	N8891954	. KNOB ADJ / HEIGHT CONTROL / CURRENT	1				
50	N8887212	AIR BOX ASSY W3 AIR SWITCH	1				

		Date:07/2024	PAGE:Y2-1823-70

SUSPENSION ASSY - "USSC" - 9100ALX3

Item#	Part	Description	XLII 45	XLII MTH40	XLII MTH45	XLII MTH45E	NOTES
51	N8883035	. SWITCH BOX	1				
52	N8892491	. AIR SWITCH / LUMBAR	2				
53	N8892492	. AIR SWICH / BOLSTER	1				
54	N8893453	. Y CONNECTOR 1/8"	3				
55	N8893454	. UNION CONNECTOR 1/8"	3				
56	N8882986	. SCREW 1/4-20x1 3/4	2				
57	N8893455	AIR TUBE 1/4"	AR				
		A) INCLUDE ITEMS # 18, 27 AND 28					

		Date:07/2024	PAGE:Y2-1823-80
BASE ASSY - "USSC" - 9100ALX3			

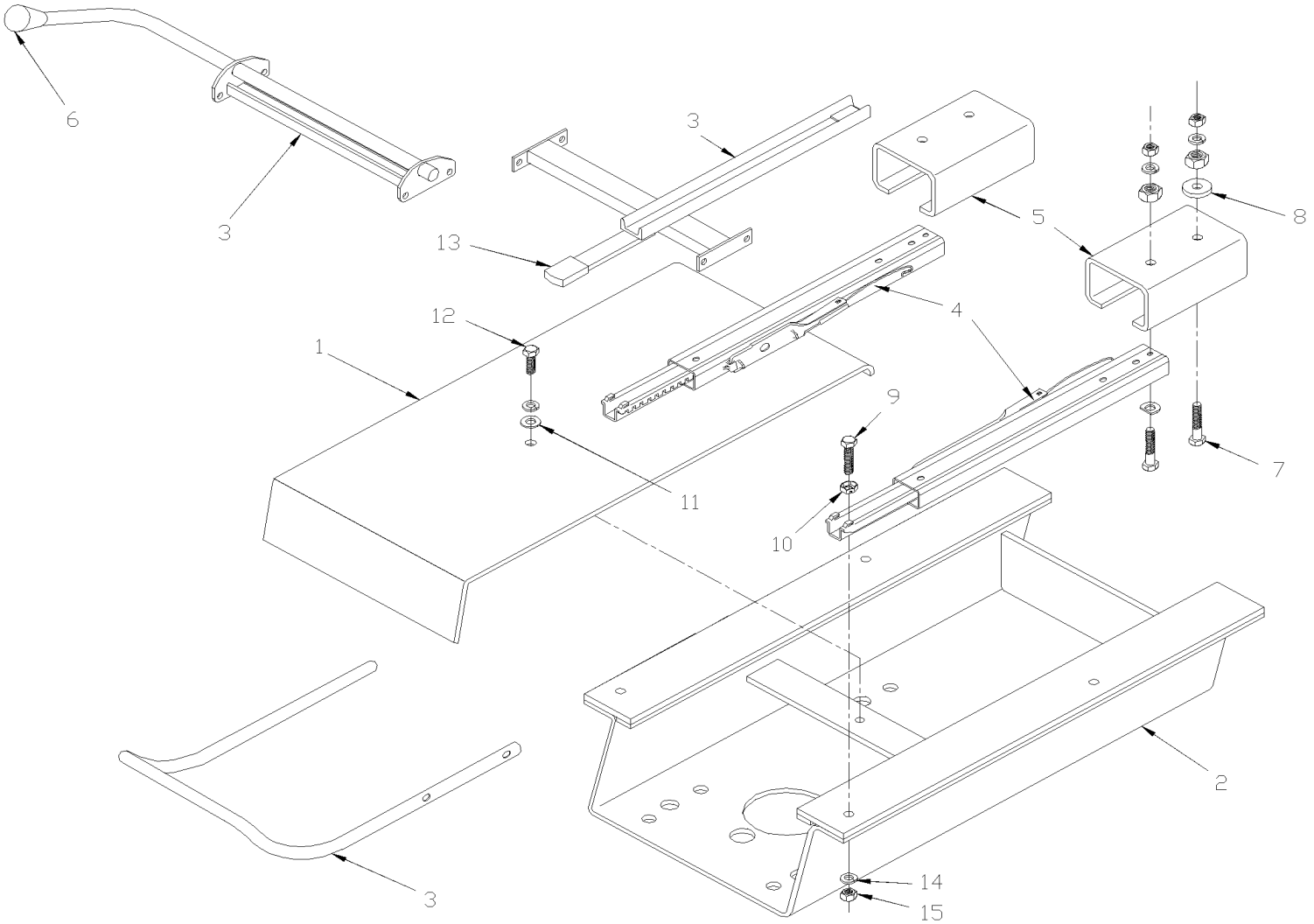

		Date:07/2024	PAGE:Y2-1823-80

BASE ASSY - "USSC" - 9100ALX3

Item#	Part	Description	XLII 45	XLII MTH40	XLII MTH45	XLII MTH45E	NOTES
1	N8891960	COVER	1				
2	N8891958	BASE ASSY 4"	1				
3	N8891955	RELEASE HANDLE ASM	1				
4	N8883008	SLIDE SET 9.45"	1				
4	N8890626	SPRING 10"	1				A
5	N8891959	BRACKET SLIDE REINFORCMENT	2				
6	N8892036	KNOB 1 1/8" DIA.	1				
7	N8882965	SCREW 5/16-18x1 1/2	6				
8	N8883004	SPACER SLIDE	8				
9	N8882964	SCREW 5/16-18x1 1/4	4				
10	N8883007	NUT 3/8	4				
11	N8882966	WASHER, LOCK 7/16	2				
12	N8882962	SCREW CAP HEX 7/16-20X2.25	2				
13	N8883002	COVER LIMITOR	1				
14	N8882968	WASHER, LOCK 5/16	4				
15	N8883006	NUT 5/16-18 GR8ZX	4				
		A) BETWEEN TWO SLIDES					

From Y-7046 To 6-8906		Date:07/2024	PAGE:Y2-1824-00
HOSTESS SEAT ASSY			

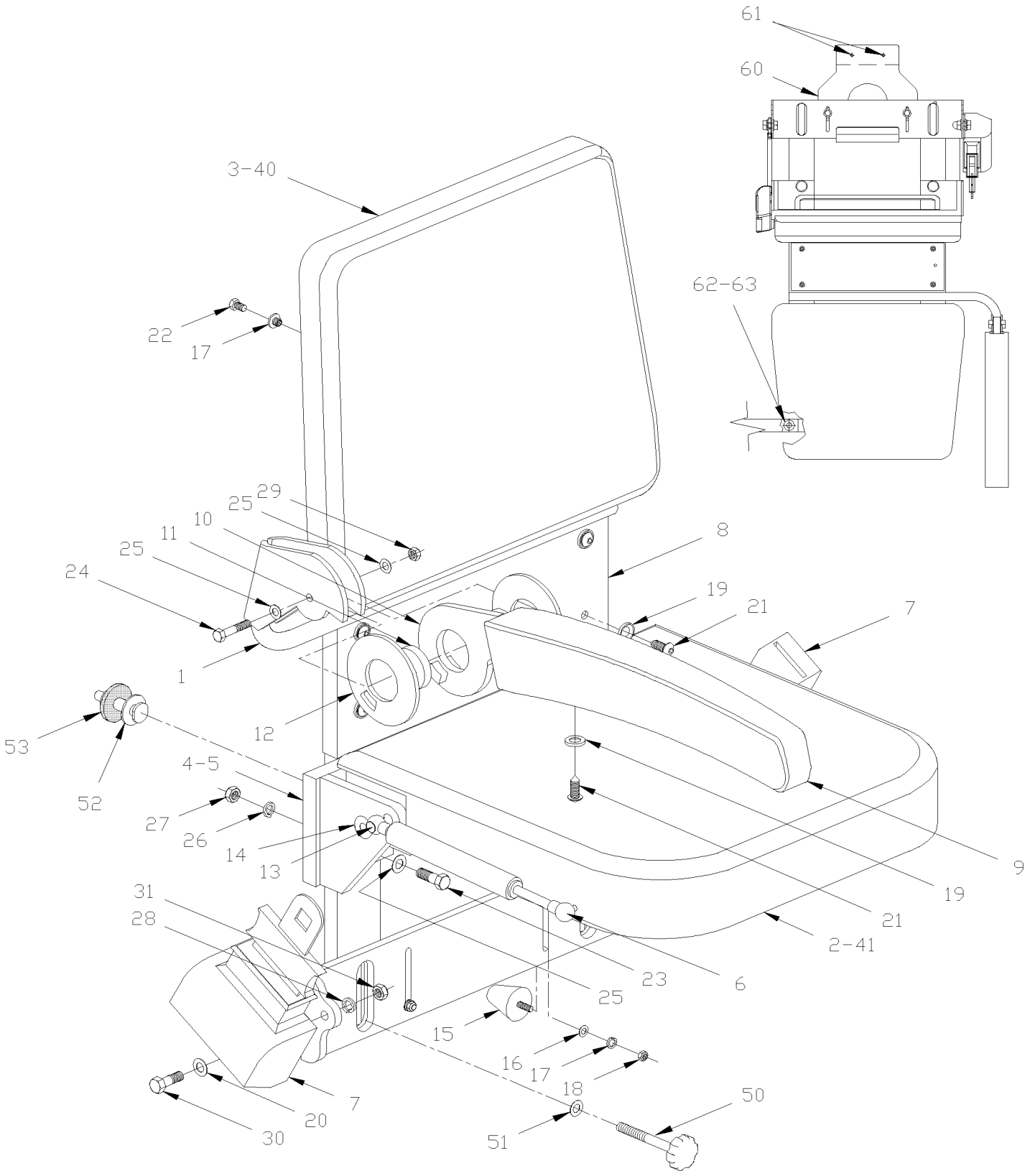

From Y-7046 To 6-8906		Date:07/2024	PAGE:Y2-1824-00

HOSTESS SEAT ASSY

Item#	Part	Description	XLII 45	XLII MTH40	XLII MTH45	XLII MTH45E	NOTES
	363326P	HOSTESS SEAT ASSY To 2-7732	1				
	363900P	HOSTESS SEAT ASSY From 2-7733 To 2-7879	1				
	364013P	HOSTESS SEAT ASSY From 2-7880	1				E
1	363627	. FRAME ASSY To 2-7879	1				
1	364107	. FRAME ASSY From 2-7880	1				
2	363050	. SEAT BASE, ASSY To 2-7879	1				
2	364008	. SEAT BASE, ASSY From 2-7880	1				
NS	363040	. CUSHION FOAM	1				
3	Call order desk	. BACKREST PANEL ASSY W/FOAM & COVERING /S.C.	1				P
3	363014	. LOWER BACKREST PANEL	1				
NS	363041	. BACK REST FOAM	1				
3	500453	. NUT TEE 1/4-20	1				
4	363061	. R.H. SUPPORT ASSY To 2-7732	1				A
4	363995	. R.H. SUPPORT ASSY From 2-7733 To 2-7879	1				B
4	364002	. R.H. SUPPORT ASSY From 2-7880	1				
5	363062	. L.H. SUPPORT ASSY To 2-7732	1				A
5	363996	. L.H. SUPPORT ASSY From 2-7733 To 2-7879	1				
5	364004	. L.H. SUPPORT ASSY From 2-7880	1				
6	980020	. CYLINDER GAZ / 244/164MM C/C / 35LBS	1				
NS	980015	. BALL STUD / W/10 MM X M8-1.25 / 29.18 MM	1				
NS	5001063	. RIVET NUT FL OKS M8-1.25 11.0-1.5	1				
7	860695	. SEAT BELT / KIT	1				
8	Call order desk	. FINISHING FABRIC	AR				P
9	363624	. COVERING ARMREST / LONG To 2-7879	1				
10	362939	. ARMREST / LONG To 2-7879	1				
11	363067	. SPACER To 2-7879	1				
12	362877	. SPACER PLASTIC / FRICTION DISK To 2-7879	2				
13	980015	. BALL STUD / W/10 MM X M8-1.25 / 29.18 MM	1				
14	507260	. BUSHING NYLINER W/SHOULDER .375x.437x.375x.594	2				
15	504600	. BUMPER RUBBER BOLT / .625 ODx1.0TH x 10-32X.5 STUD	2				
16	500440	. WASHER FL .250x.562x.065 Z050	2				
17	500473	. WASHER LO SPT .262x.489x.062 Z050	8				
18	500995	. NUT HEX CAP #10-32 Z050	2				
19	500345	. WASHER FN CKF .187x.500x.090 BR BK	5				
20	500444	. WASHER FL .406x.812x.065 Z050	8				
21	500686	. SCREW TP OV PH #6x1/2 BK	5				
22	500554	. SCREW MA RND SLT 1/4-20x1/2 SS	6				
23	500565	. SCREW MA RND PH 5/16-18x3/4 SS	4				
23	500069	. SCREW CAP HEX M8-1.25x16 G10.9 DP	2				
24	500182	. SCREW CAP HEX 5/16-18x1 1/4 G5 PT Z050 To 2-7879	1				
25	500441	. WASHER FL .312x.734x.065 Z050 From 2-7880	6				
26	500476	. WASHER LO SPT .317x.586x.078 Z050	4				

From Y-7046 To 6-8906		Date:07/2024	PAGE:Y2-1824-00

HOSTESS SEAT ASSY

Item#	Part	Description	XLII 45	XLII MTH40	XLII MTH45	XLII MTH45E	NOTES
27	500778	. NUT HEX 5/16-18 N500	4				
28	500478	. WASHER LO SPT .380x.683x.094 Z050	2				
29	500777	. NUT HEX STO 5/16-18 Z050 To 2-7879	1				
30	500191	. SCREW CAP HEX 3/8-16x1 G5 Z050 From 2-7880	2				
31	5001060	. NUT HEX CAP 3/8-16 NP	2				
40	363345P	. COVERING ASSY, BACKREST / S.C.C.	1				
41	363346P	. COVERING ASSY, SEATREST / S.C.C.	1				
NS	363997	KIT / "REPOSITIONING SEAT" To 2-7879	1				
. NS	IS-01045	. SEE INSTRUCTION SHEET To 2-7879	1				
NS	362918	. CUSHION / PLASTIC 46MM O.D. To 2-7879	1				B
NS	363992	. CAP TENSIONER 71MM O.D. / ALUMINUM To 2-7879	1				B
NS	520169	. SPRING To 2-7879	1				B
NS	507260	. BUSHING NYLINER W/SHOULDER .375x.437x.375x.594 To 2-7879	1				B
NS	500069	. SCREW CAP HEX M8-1.25x16 G10.9 DP To 2-7879	2				B
NS	502744	. NUT HEX STO M8-1.25 Z050 To 2-7879	1				B
50	363938	SPECIAL BOLT ASSY / TO FIX HOSTESS SEAT / 97MM	1				C
NS	363070	SPECIAL BOLT ASSY / TO FIX HOSTESS SEAT / 126MM	1				C
NS	504500	SNAP BUSHING / .766x1.125x.453	2				C
51	500444	WASHER FL .406x.812x.065 Z050	2				C
52	363939	FASTENER / UPPER / TO FIX HOSTESS SEAT 38MM X M12-1.75	2				C
53	363363	WASHER RUBBER 42MM O.D. X 13MM I.D. X 3/16"	2				C
60	363933	HOOK	1				D
61	504416	RIVET POP DOME OE 3/16x5/8 SS	3				D
62	363547	BELT 485MM	1				D
63	5001168	BUMPER RUBBER / .750 OD x .562 TH x .187 HOLE	2				D
		A) FOR PRODUCT IMPROVEMENT YOU REQUIRE KIT #363997					
		B) THOSE ITEMS ARE INCLUDED IN KIT #363997					
		C) THOSE ITEMS ARE USED TO FIX HOSTESS SEAT					
		D) DTHOSE ITEMS ARE USED TO FIX HOSTESS SEAT IN THE BAGGAGE CASE					
		E) THIS SEAT ASSY DO NOT HAVE ARMREST					
		P) CALL ORDER DESK FOR SPECIFIC APPLICATION (V.I.N.)					

		Date:07/2024	PAGE:Y2-1824-30
PASSENGER'S SEAT - "AMAYA" IDENTIFICATION "MODEL"			

GAUDI

BRAZIL

2 + 1

TORINO

TORINO VIP

SIGLIUM

PATRIOT

PATRIOT BRASIL

PATRIOT VIP

		Date:07/2024	PAGE:Y2-1824-30

PASSENGER'S SEAT - "AMAYA" IDENTIFICATION "MODEL"

Item#	Part	Description	XLII 45	XLII MTH40	XLII MTH45	XLII MTH45E	NOTES
		PASSENGER'S SEAT - "GAUDI" MODEL					
6	**Y2-1826-08**	**PASSENGER'S SEAT - "AMAYA" "GAUDI"**					
		PASSENGER'S SEAT - "BRASIL" MODEL					
11	**Y2-1826-06**	**PASSENGER'S SEAT - "AMAYA" "BRASIL"**					
12	**Y2-1826-51**	**ARMREST PASSENGER'S SEAT - "AMAYA" WITH "BRASIL"**					
		PASSENGER'S SEAT - "2 + 1" MODEL					
16	**Y2-1826-05**	**PASSENGER'S SEAT - "AMAYA" "EUROTECH"**					
17	**Y2-1826-50**	**ARMREST PASSENGER'S SEAT - "AMAYA" WITH "EUROTECH"**					
		PASSENGER'S SEAT - "TORINO" MODEL					
21	**Y2-1826-07**	**PASSENGER'S SEAT - "AMAYA" "SIGLIUM" TORO & TORINO**					
		PASSENGER'S SEAT - "TORINO" VIP MODEL					
		PASSENGER'S SEAT - "SIGLIUM" MODEL					
		PASSENGER'S SEAT - "PATRIOT" MODEL					
		PASSENGER'S SEAT - "PATRIOT BRASIL" MODEL					
		PASSENGER'S SEAT - "PATRIOT VIP" MODEL					

		Date:07/2024	PAGE:Y2-1825-02
PASSENGER'S SEAT - "AMERICAN" - W6695			

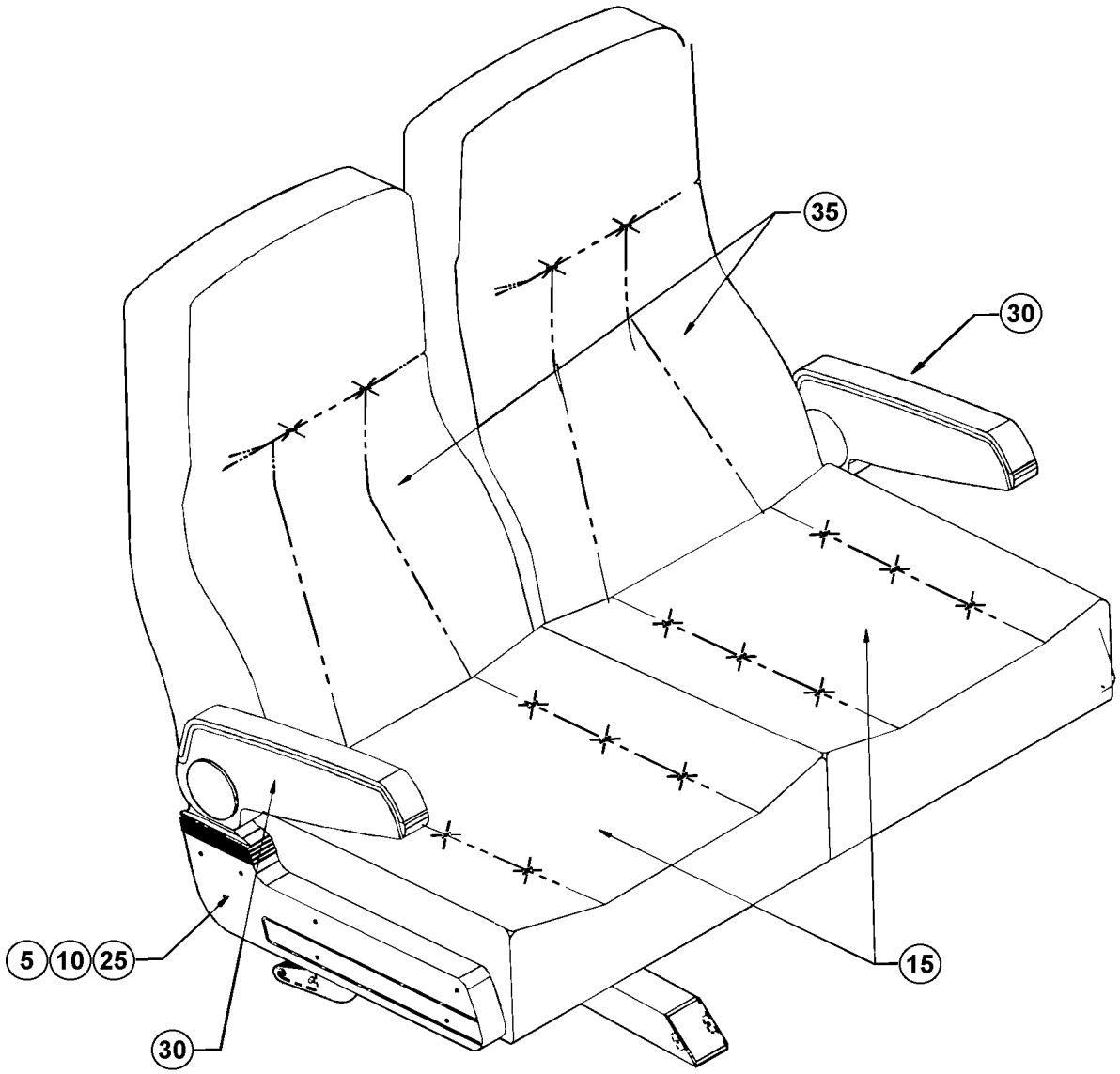

		Date:07/2024	PAGE:Y2-1825-02
PASSENGER'S SEAT - "AMERICAN" - W6695			

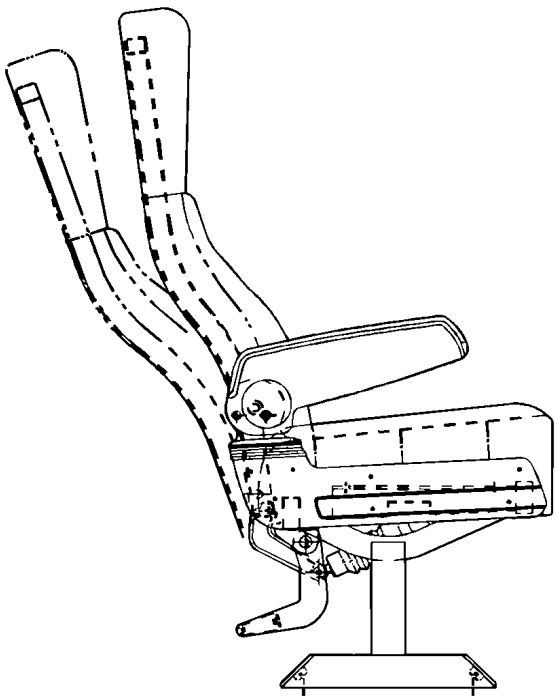

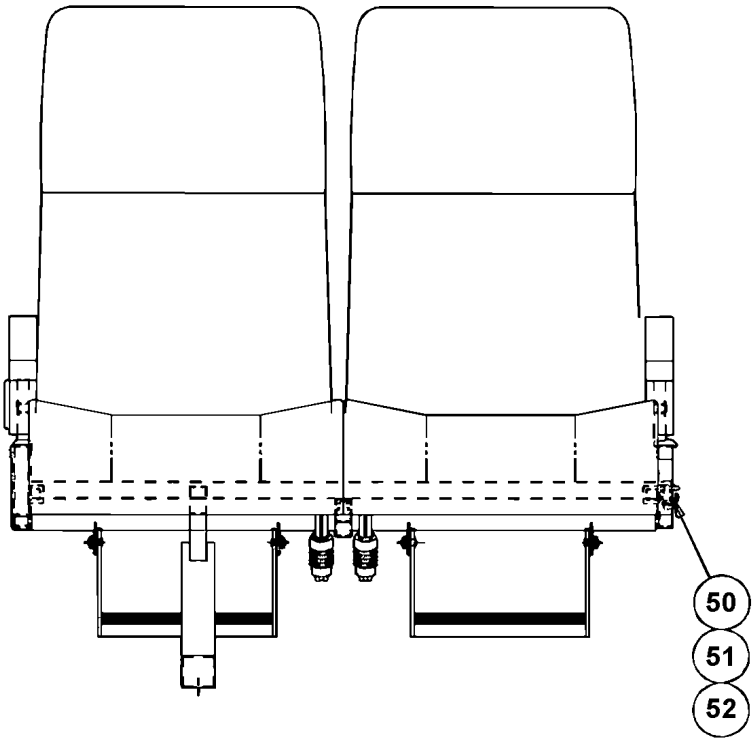

		Date:07/2024	PAGE:Y2-1825-02

PASSENGER'S SEAT - "AMERICAN" - W6695

Item#	Part	Description	XLII 45	XLII MTH40	XLII MTH45	XLII MTH45E	NOTES
		IMPORTANT NOTE:					
		TO ORDER COMPLETE PASSENGER'S SEAT KIT #,					
		SEE THE FINAL VEHICLE RECORD.					
5	**Y2-1825-05**	**. PASSENGER'S SEAT - "AMERICAN" - FRAME**					
10	**Y2-1825-10**	**. PASSENGER'S SEAT - "AMERICAN" - FRAME ROTATIN**					
15	**Y2-1825-20**	**. PASSENGER'S SEAT - "AMERICAN" - CUSHION**					
25	**Y2-1825-40**	**. PASSENGER'S SEAT - "AMERICAN" - FOOTREST**					
30	**Y2-1825-50**	**. PASSENGER'S SEAT - "AMERICAN" - ARMREST**					
35	**Y2-1825-60**	**. PASSENGER'S SEAT - "AMERICAN" - BACK & ACCESS**					
50	Call order desk	SCREW - WALL ATTACHING	2				P
51	860094	CHANNEL WALL ATTACHING	2				
52	Call order desk	WASHER	2				P
		P) CALL ORDER DESK FOR SPECIFIC APPLICATION (V.I.N.)					

		Date:07/2024	PAGE:Y2-1825-03
PASSENGER'S SEAT - "AMERICAN" - W6696 & W7696			

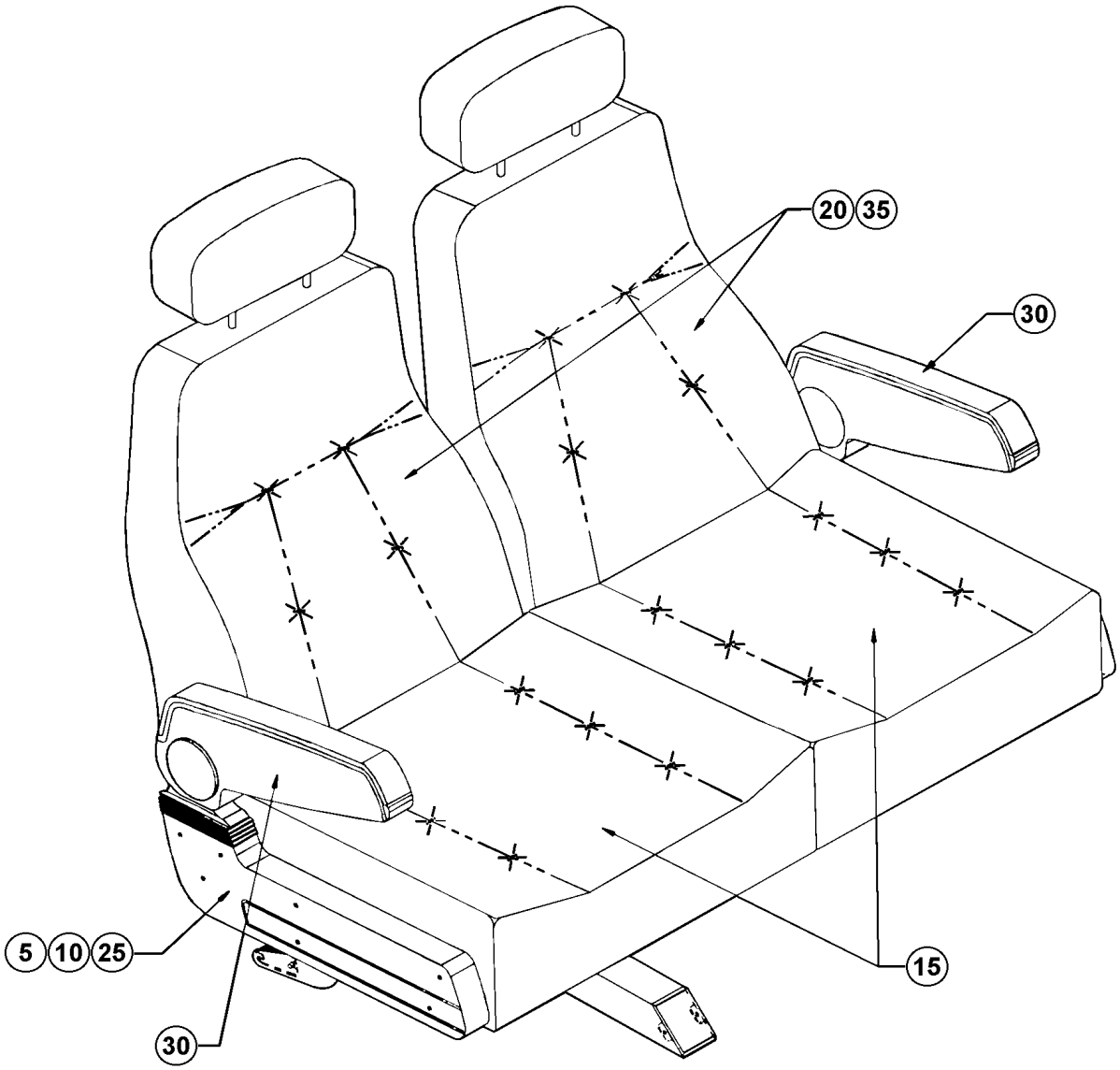

		Date:07/2024	PAGE:Y2-1825-03
PASSENGER'S SEAT - "AMERICAN" - W6696 & W7696			

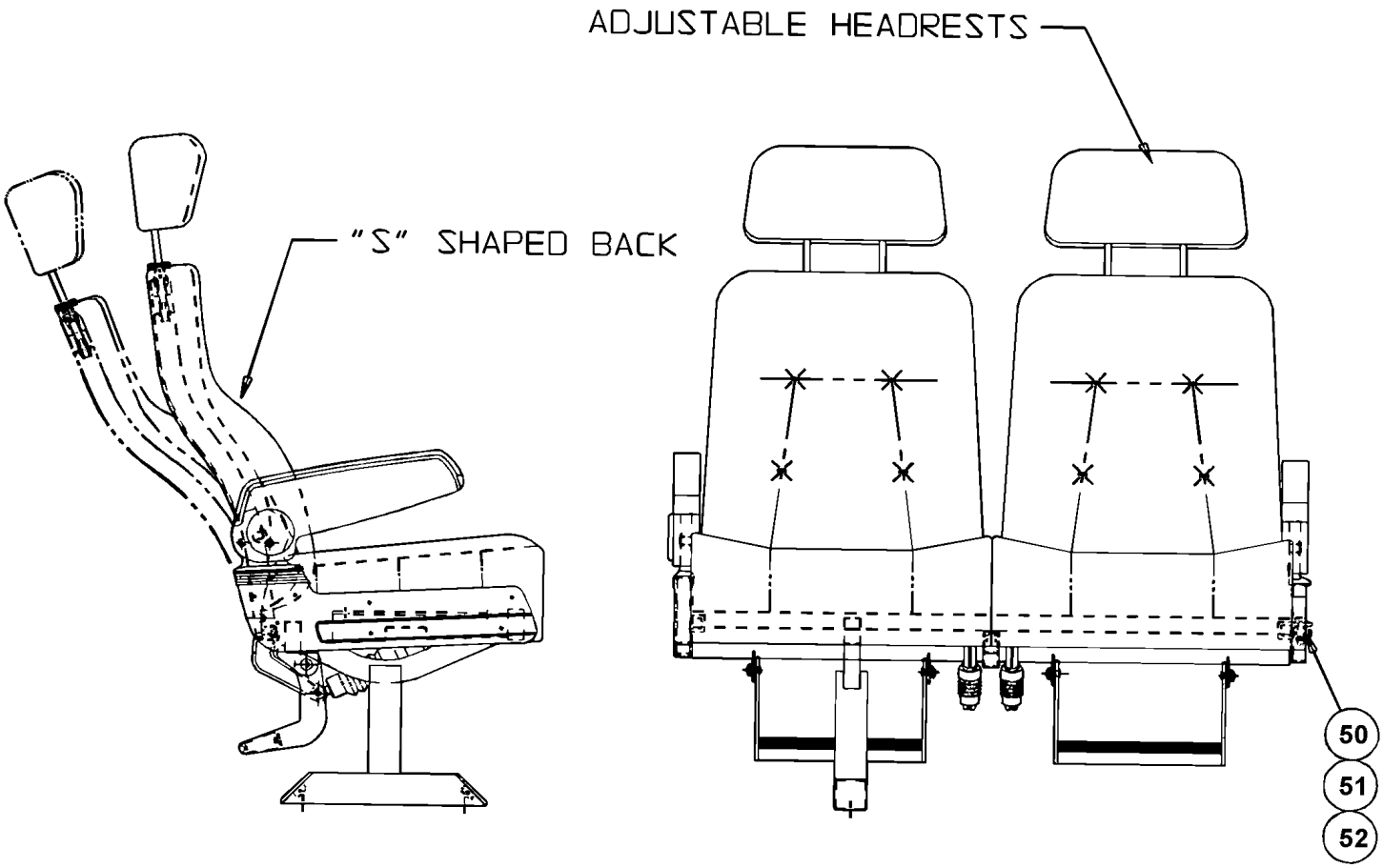

		Date:07/2024	PAGE:Y2-1825-03

PASSENGER'S SEAT - "AMERICAN" - W6696 & W7696

Item#	Part	Description	XLII 45	XLII MTH40	XLII MTH45	XLII MTH45E	NOTES
		IMPORTANT NOTE:					
		TO ORDER COMPLETE PASSENGER'S SEAT KIT #,					
		SEE THE FINAL VEHICLE RECORD.					
5	**Y2-1825-05**	**. PASSENGER'S SEAT - "AMERICAN" - FRAME**					
10	**Y2-1825-10**	**. PASSENGER'S SEAT - "AMERICAN" - FRAME ROTATIN**					
15	**Y2-1825-20**	**. PASSENGER'S SEAT - "AMERICAN" - CUSHION**					
20	**Y2-1825-31**	**. PASSENGER'S SEAT - "AMERICAN" - BACKREST WX69**					
25	**Y2-1825-40**	**. PASSENGER'S SEAT - "AMERICAN" - FOOTREST**					
30	**Y2-1825-50**	**. PASSENGER'S SEAT - "AMERICAN" - ARMREST**					
35	**Y2-1825-60**	**. PASSENGER'S SEAT - "AMERICAN" - BACK & ACCESS**					
50	Call order desk	SCREW - WALL ATTACHING	2				P
51	860094	CHANNEL WALL ATTACHING	2				
52	Call order desk	WASHER	2				P
		P) CALL ORDER DESK FOR SPECIFIC APPLICATION (V.I.N.)					

		Date:07/2024	PAGE:Y2-1825-05
PASSENGER'S SEAT - "AMERICAN" - FRAME			

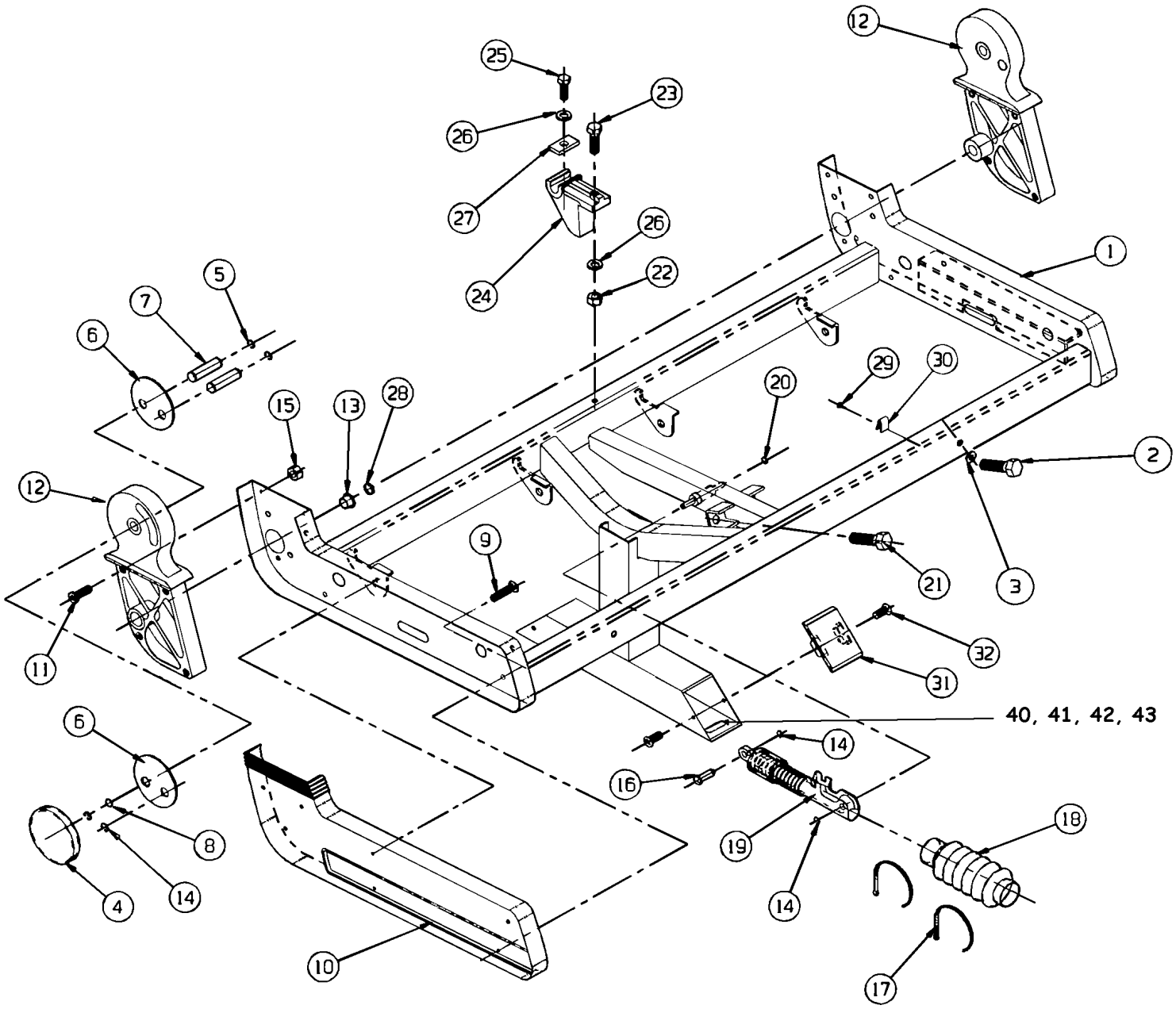

LH FRAME ASSEMBLY (SHOWN)
RH FRAME ASSEMBLY (OPPOSSITE HAND)

		Date:07/2024	PAGE:Y2-1825-05

PASSENGER'S SEAT - "AMERICAN" - FRAME

Item#	Part	Description	XLII 45	XLII MTH40	XLII MTH45	XLII MTH45E	NOTES
1	Call order desk	FRAME ASSY RH W/FOOTREST	1				P
1	Call order desk	FRAME ASSY LH W/FOOTREST	1				P
1	Call order desk	FRAME ASSY RH W/O FOOTREST	1				P
NS	Call order desk	FRAME ASSY LH W/O FOOTREST	1				P
1	Call order desk	FRAME ASSY LH REAR CROSS	1				P
2	Call order desk	SCREW CAP HEX 5/16-18x2 3/4	2				P
3	500476	WASHER LO SPT .317x.586x.078 Z050	2				
4	Call order desk	COVER DECORATIVE ASSY	1				P
5	Call order desk	RETAINER RING	8				P
6	Call order desk	PLATE REINFORCEMENT	4				P
7	Call order desk	PIN ARM PIVOT	4				P
8	865884	WASHER SPR WAVE	1				
9	Call order desk	SCREW SIDE TRIM #8 X 5/8"	7				P
10	862901	TRIM PANEL SIDE L.H.	1				
10	863776	TRIM PANEL SIDE R.H.	1				
11	Call order desk	SCREW MA PAN PH #10-32 X 5/8	8				P
12	Call order desk	CASTING PIVOT (AISLE SIDE)	1				P
12	Call order desk	CASTING PIVOT (AISLE SIDE)	1				P
12	Call order desk	CASTING PIVOT (WALL SIDE)	1				P
12	Call order desk	CASTING PIVOT (WALL SIDE)	1				P
13	860042	PIVOT BEARING	2				
14	Call order desk	SNAP RING	4				P
15	500423	NUT HEX NYRT #10-32 SS	8				
16	Call order desk	PIN CONNECTOR LINK	2				P
17	504273	CABLE TIE / 1/8" X 3"1/2	2				
18	Call order desk	COVER MECHLOK	2				P
19	864135	LOCK MECHANISM RH	1				
19	864268	LOCK MECHANISM LH	1				
NS	861486	CLIP / WIRE RETAINER	2				
20	502523	RIVET NUT FL OKS 5/16-18 .059-.119	1				
21	500052	SCREW CAP HEX 3/8-24x2 G5 ZP	2				
23	502694	SCREW CAP HEX 3/8-16x3 1/4 G5 ZP	1				
24	864857	CASTING - CENTER	1				
25	500192	SCREW CAP HEX 3/8-16x1 1/4 G5 Z050	1				
26	500480	WASHER LO SPT .443x.779x.109 Z050	2				
27	Call order desk	PLATE RETAINER	1				P
28	Call order desk	WASHER FL NYL	4				P
29	Call order desk	RIVET POP 1/8" SS L FLANGE	3				P
30	Call order desk	CLAMP	3				P
31	N8881678	CAP - END	2				
32	500952	SCREW TP BDG PH #8x1/2 SS	4				
40	500305	SCREW CAP HEX 3/8-16x7/8 G5 Z050	2				

		Date:07/2024	PAGE:Y2-1825-05

PASSENGER'S SEAT - "AMERICAN" - FRAME

Item#	Part	Description	XLII 45	XLII MTH40	XLII MTH45	XLII MTH45E	NOTES
41	500478	WASHER LO SPT .380x.683x.094 Z050	2				
42	500270	WASHER FL .406x1.000x.063 SS	2				
43	362627	PLATE ANCHOR / 3/8-16 BOLT INSIDE TRACK / 1 1/4" X 1 1/4"	2				
		P) CALL ORDER DESK FOR SPECIFIC APPLICATION (V.I.N.)					

		Date:07/2024	PAGE:Y2-1825-06
PASSENGER'S SEAT - "AMERICAN" SERIES 2000 & MORE			

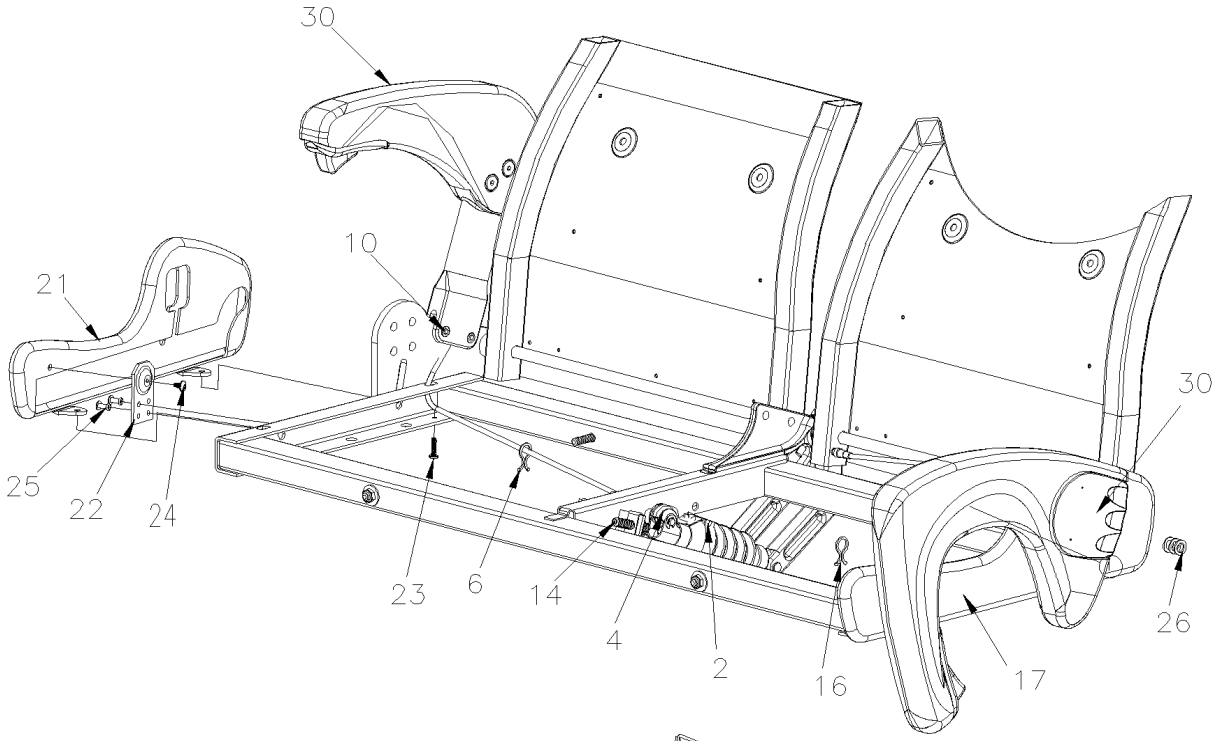

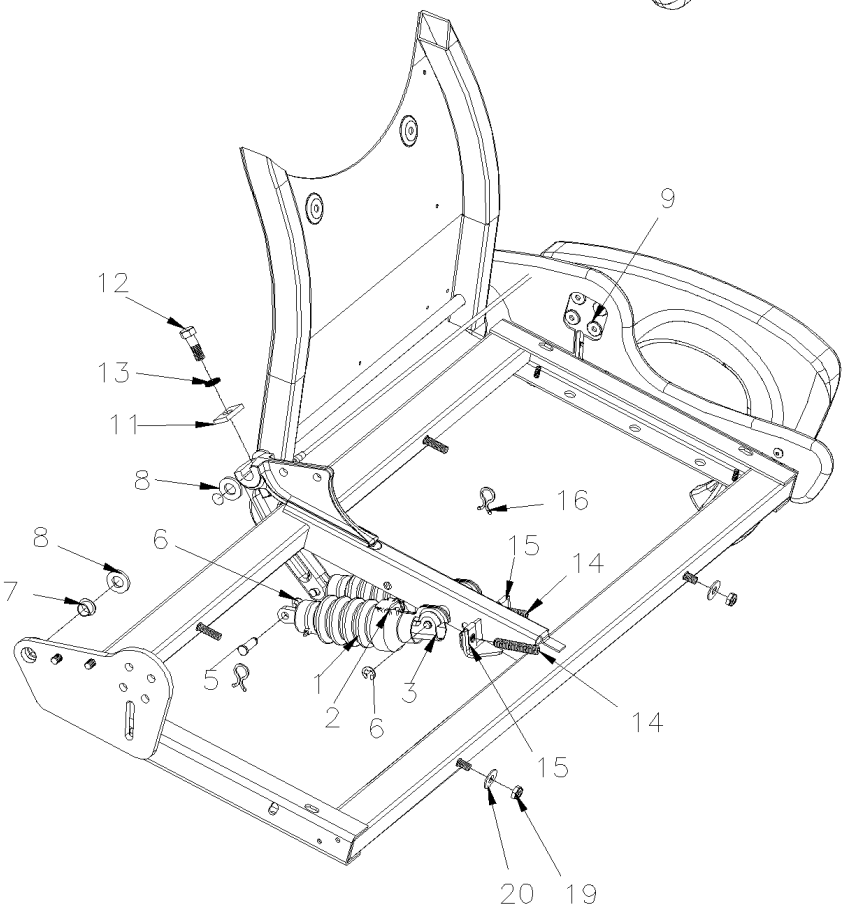

		Date:07/2024	PAGE:Y2-1825-06

PASSENGER'S SEAT - "AMERICAN" SERIES 2000 & MORE

Item#	Part	Description	XLII 45	XLII MTH40	XLII MTH45	XLII MTH45E	NOTES
1	Call order desk	BOOT COVERRING CYLINDER	2				P
2	865812	ATTACHMENT FITTING	2				
2	504012	CABLE TIE / 3/16" X 6"1/2	2				
3	864135	LOCK MECHANISM RH	1				
4	864268	LOCK MECHANISM LH	1				
NS	861486	CLIP / WIRE RETAINER	2				
5	865828	PIN CONNECTOR LINK	2				
6	865819	RETAINING RING	4				
7	865818	BEARING PIVOT	2				
8	Call order desk	WASHER PLAIN NYLON 1/2" x 1" x 1/8"	4				P
9	865886	NUT JCN-CAP 1/4-20	4				
10	865808	SCREW CAP HEXS 5/16-18x.672	2				
11	864857	CASTING - CENTER	1				
12	865815	SCREW CAP HEX 3/8-16x1 1/8	1				
13	865816	WASHER "NORD-LOCK" 3/8x21/32x.1046 ZN	1				
14	865811	SCREW SET HEXS FLAT	2				
15	Call order desk	U-NUT	2				P
16	Call order desk	BALL END PURSE LOCK	2				P
17	Call order desk	TRIM PANEL PKG L.H.	1				P
19	865806	NUT HEX JAM 1/4-20 ZP	2				
20	865807	WASHER FL 5/16x7/8x16GA SS	2				
21	Call order desk	PANEL AISLE TRIM	1				P
22	Call order desk	PANEL TRIM SUPPORT	1				P
23	19509680	SCREW SRB 40M #10-24x3/4"	2				
24	865960	SCREW TP TR SQ #10-24x3/8	1				
25	Call order desk	RIVET DOME HEAD ST 3/16"x9/16"	2				P
26	N8882739	WASHER FL 3/85/8x16GA	3				
30	**Y2-1825-51**	**PASSENGER'S SEAT - "AMERICAN" - ARMREST SERIES 2000 & MORE**					
		P) CALL ORDER DESK FOR SPECIFIC APPLICATION (V.I.N.)					

		Date:07/2024	PAGE:Y2-1825-10
PASSENGER'S SEAT - "AMERICAN" - FRAME ROTATIN			

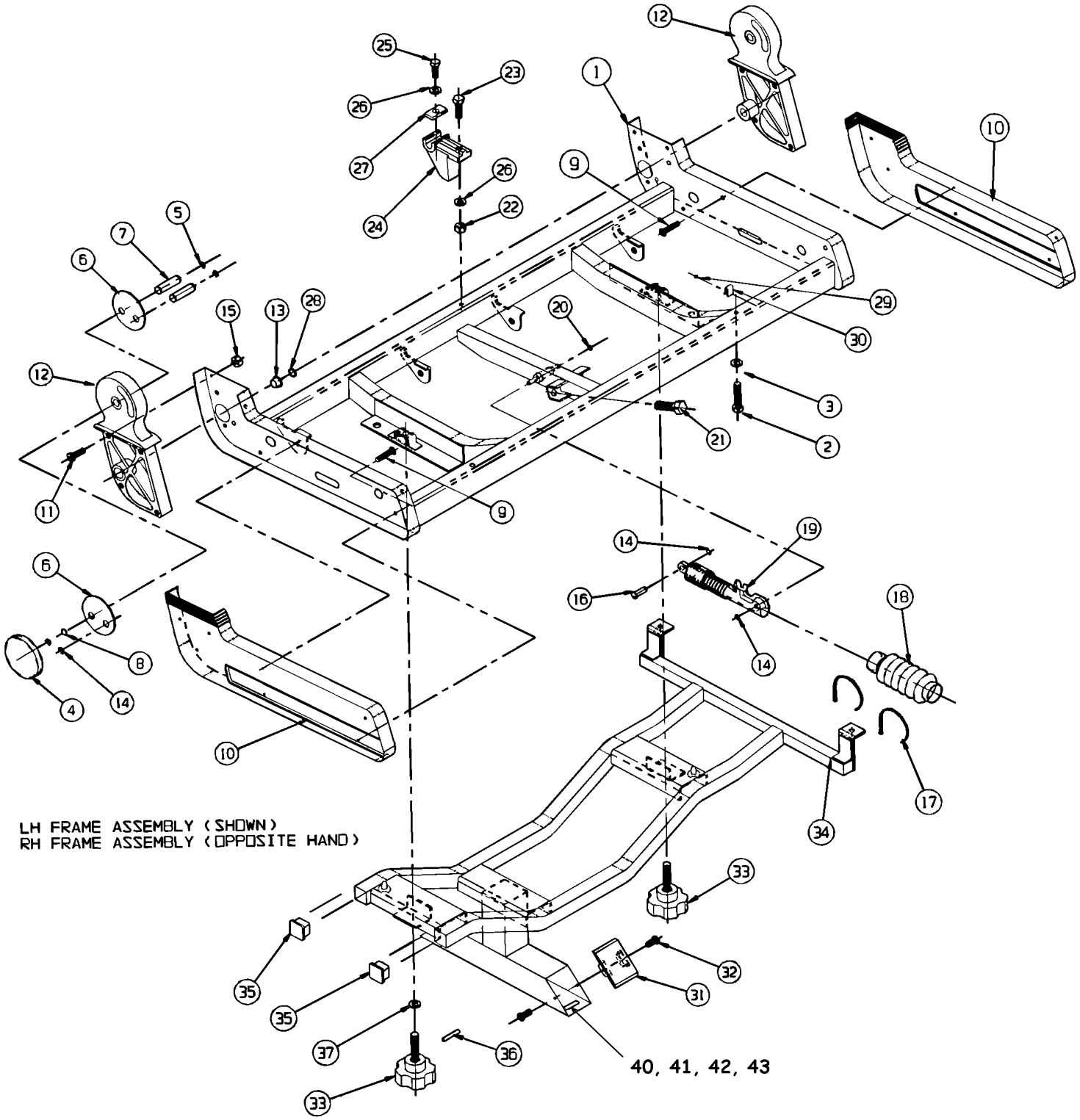

		Date:07/2024	PAGE:Y2-1825-10

PASSENGER'S SEAT - "AMERICAN" - FRAME ROTATIN

Item#	Part	Description	XLII 45	XLII MTH40	XLII MTH45	XLII MTH45E	NOTES
1	Call order desk	FRAME ASSY UPPER W/FOOTREST	1				P
2	Call order desk	SCREW CAP HEX 5/16-18x2 3/4	2				P
3	500476	WASHER LO SPT .317x.586x.078 Z050	2				
4	Call order desk	COVER DECORATIVE ASSY	1				P
5	Call order desk	RETAINER RING	8				P
6	Call order desk	PLATE REINFORCEMENT	4				P
7	Call order desk	PIN ARM PIVOT	4				P
8	865884	WASHER SPR WAVE	1				
9	Call order desk	SCREW SIDE TRIM #8 X 5/8"	14				P
10	862901	TRIM PANEL SIDE L.H.	1				
10	863776	TRIM PANEL SIDE R.H.	1				
11	Call order desk	SCREW MA PAN PH #10-32 X 5/8	8				P
12	Call order desk	CASTING PIVOT (AISLE SIDE)	1				P
12	Call order desk	CASTING PIVOT (AISLE SIDE)	1				P
13	860042	PIVOT BEARING	2				
14	Call order desk	SNAP RING	4				P
15	500423	NUT HEX NYRT #10-32 SS	8				
16	Call order desk	PIN CONNECTOR LINK	2				P
17	504273	CABLE TIE / 1/8" X 3"1/2	2				
18	Call order desk	COVER MECHLOK	2				P
19	864135	LOCK MECHANISM RH	1				
19	864268	LOCK MECHANISM LH	1				
NS	861486	CLIP / WIRE RETAINER	2				
20	Call order desk	PIN PORTER RETAINER	1				P
21	500052	SCREW CAP HEX 3/8-24x2 G5 ZP	2				
23	502694	SCREW CAP HEX 3/8-16x3 1/4 G5 ZP	1				
24	864857	CASTING - CENTER	1				
25	500192	SCREW CAP HEX 3/8-16x1 1/4 G5 Z050	1				
26	500480	WASHER LO SPT .443x.779x.109 Z050	2				
27	Call order desk	PLATE RETAINER	1				P
28	Call order desk	WASHER FL NYL	4				P
29	Call order desk	RIVET POP 1/8" SS L FLANGE	3				P
30	Call order desk	CLAMP	3				P
31	N8881678	CAP - END	1				
32	Call order desk	SCREW #8x1/2	4				P
33	864807	KNOB RETAINER	2				
34	Call order desk	FRAME ASSY - LOWER	1				P
35	Call order desk	CAP - PLUG	2				P
36	Call order desk	PIN ROLL	2				P
37	Call order desk	WASHER LO SPT	1				P
40	500305	SCREW CAP HEX 3/8-16x7/8 G5 Z050	2				
41	500478	WASHER LO SPT .380x.683x.094 Z050	2				

		Date:07/2024	PAGE:Y2-1825-10

PASSENGER'S SEAT - "AMERICAN" - FRAME ROTATIN

Item#	Part	Description	XLII 45	XLII MTH40	XLII MTH45	XLII MTH45E	NOTES
42	500270	WASHER FL .406x1.000x.063 SS	2				
43	362627	PLATE ANCHOR / 3/8-16 BOLT INSIDE TRACK / 1 1/4" X 1 1/4"	2				
		P) CALL ORDER DESK FOR SPECIFIC APPLICATION (V.I.N.)					

		Date:07/2024	PAGE:Y2-1825-20
PASSENGER'S SEAT - "AMERICAN" - CUSHION			

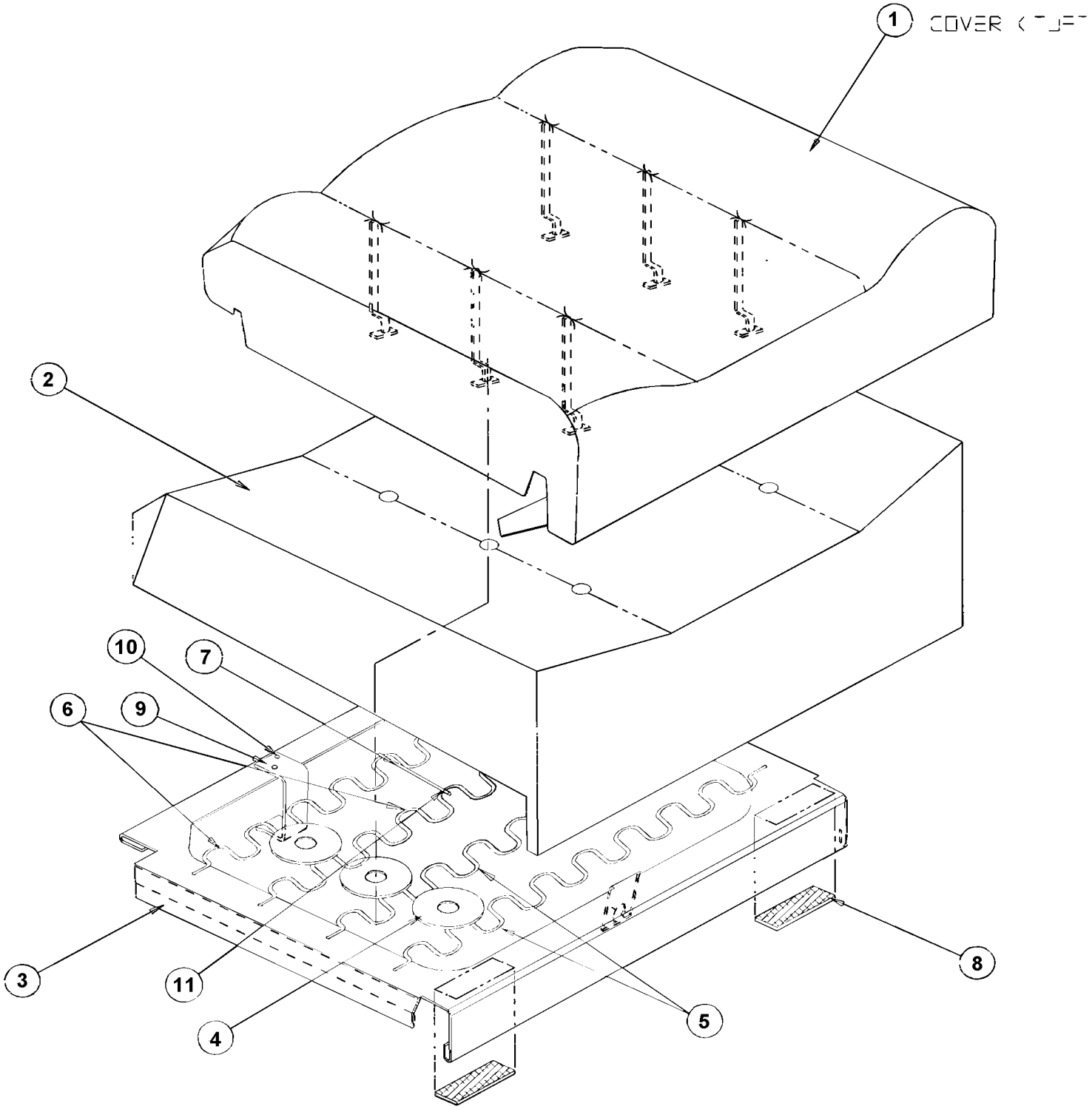

		Date:07/2024	PAGE:Y2-1825-20
PASSENGER'S SEAT - "AMERICAN" - CUSHION			

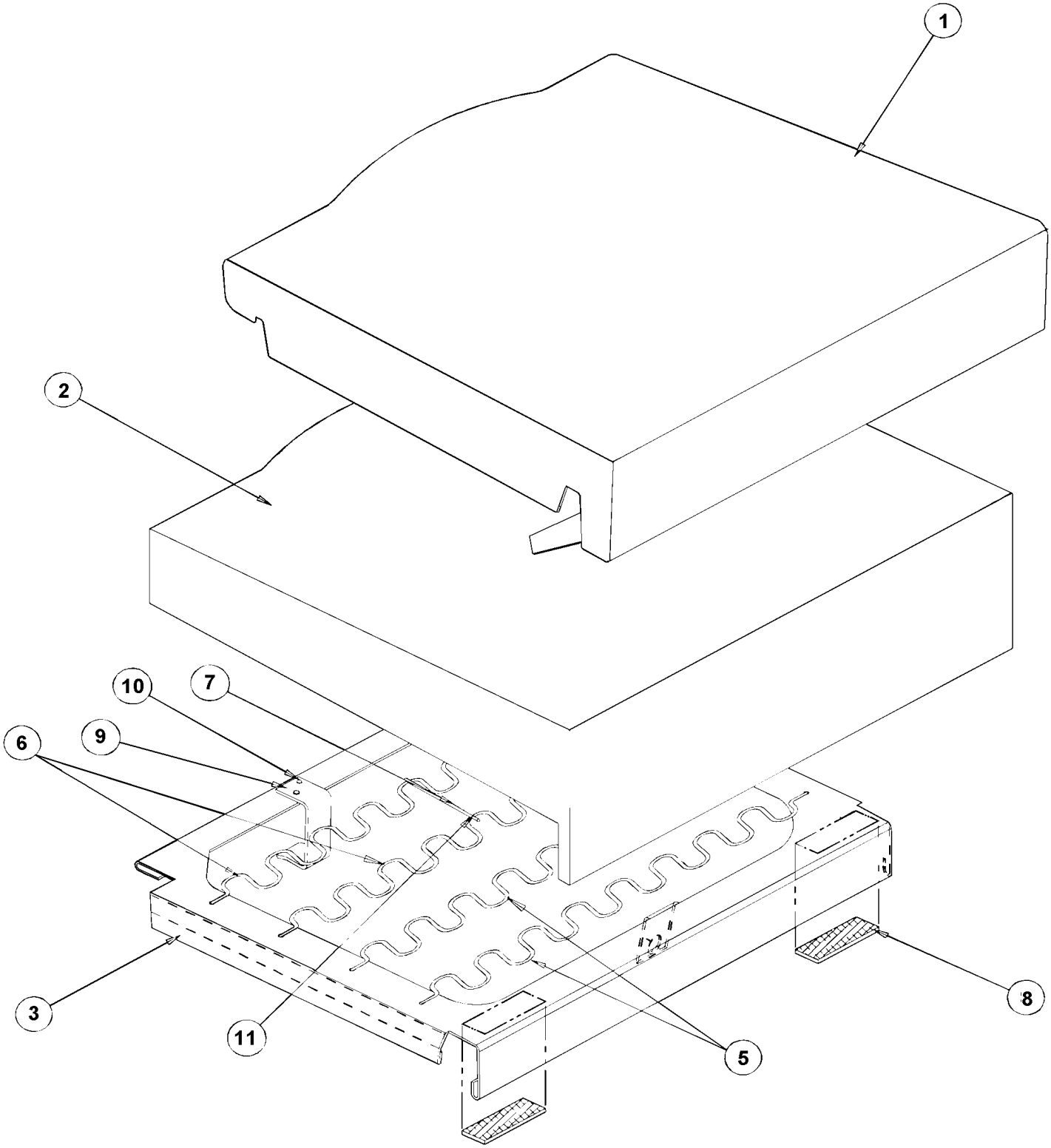

		Date:07/2024	PAGE:Y2-1825-20

PASSENGER'S SEAT - "AMERICAN" - CUSHION

Item#	Part	Description	XLII 45	XLII MTH40	XLII MTH45	XLII MTH45E	NOTES
	N.P.N.	CUSHION ASSY - TUFTED	1				4 A
	N.P.N.	CUSHION ASSY - NON-TUFTED	1				4 B
1	N.P.N.	. COVER CUSHION	1				4
2	865801	. FOAM - CUSHION TUFTED - POLY	1				A
2	Call order desk	. FOAM - CUSHION TUFTED - LOW SMOKE FOAM	1				P A
2	Call order desk	. FOAM - CUSHION NON-TUFTED - POLY	1				P B
2	Call order desk	. FOAM - CUSHION NON-TUFTED - LOW SMOKE FOAM	1				P B
3	865802	. FRAME ASSY	1				
4	Call order desk	. WASHER (PULL TAB)	6				P A
5	Call order desk	. SPRING - NO SAG (FLAT)	2				P
6	Call order desk	. SPRING - NO SAG (CROWNED)	2				P
7	Call order desk	. WIRE 5"	1				P
8	Call order desk	. VELCRO	2				P
9	Call order desk	. RETAINER - REAR	1				P
10	Call order desk	. RIVET POP 3/16x7/16 ZP	1				P
11	Call order desk	. HARTCO-CLIP	1				P
		A) TUFTED CUSHION					
		B) NON-TUFTED CUSHION					
		4) NO PARTS NUMBER					
		P) CALL ORDER DESK FOR SPECIFIC APPLICATION (V.I.N.)					

		Date:07/2024	PAGE:Y2-1825-31
PASSENGER'S SEAT - "AMERICAN" - BACKREST WX69			

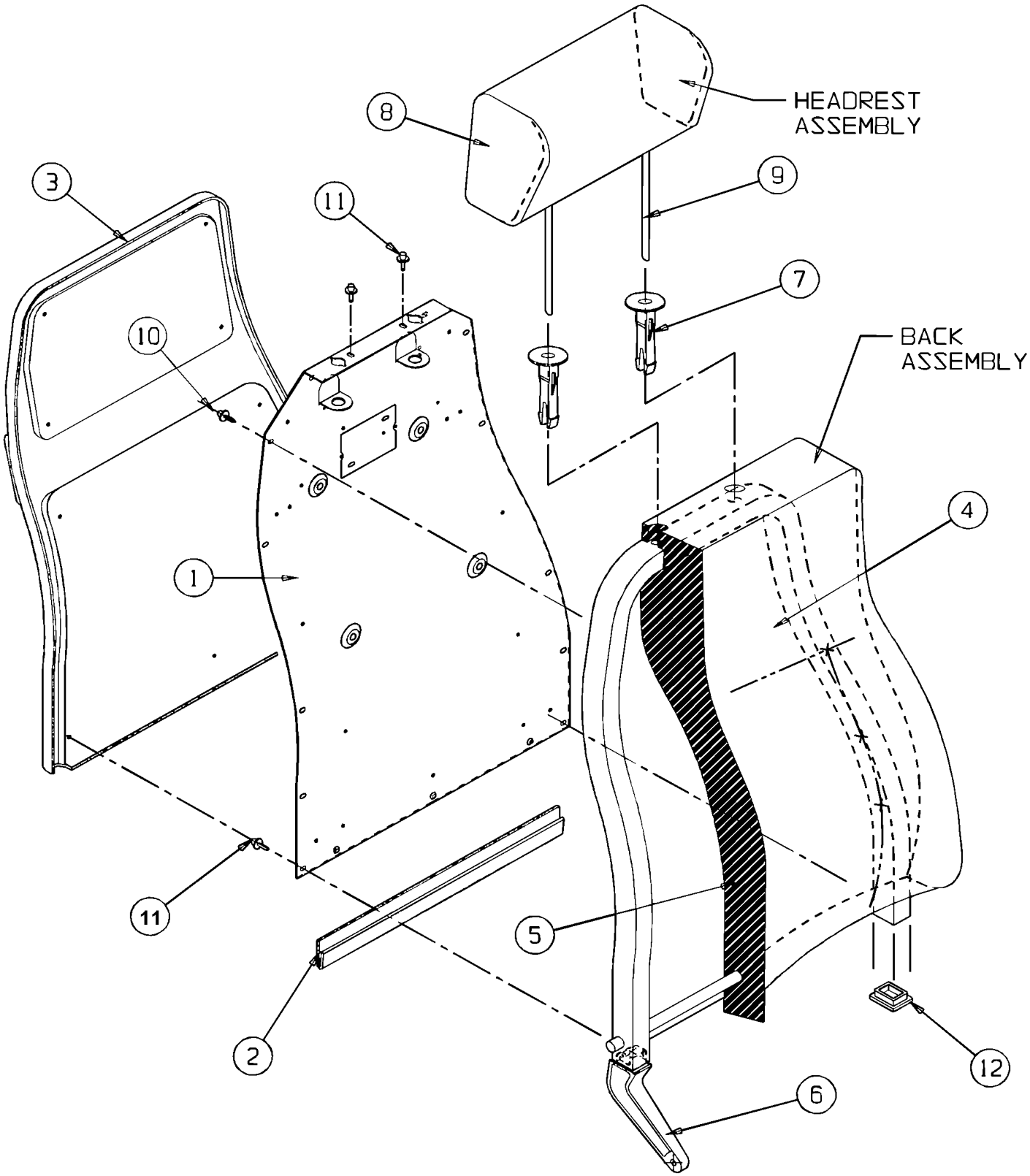

		Date:07/2024	PAGE:Y2-1825-31
PASSENGER'S SEAT - "AMERICAN" - BACKREST WX69			

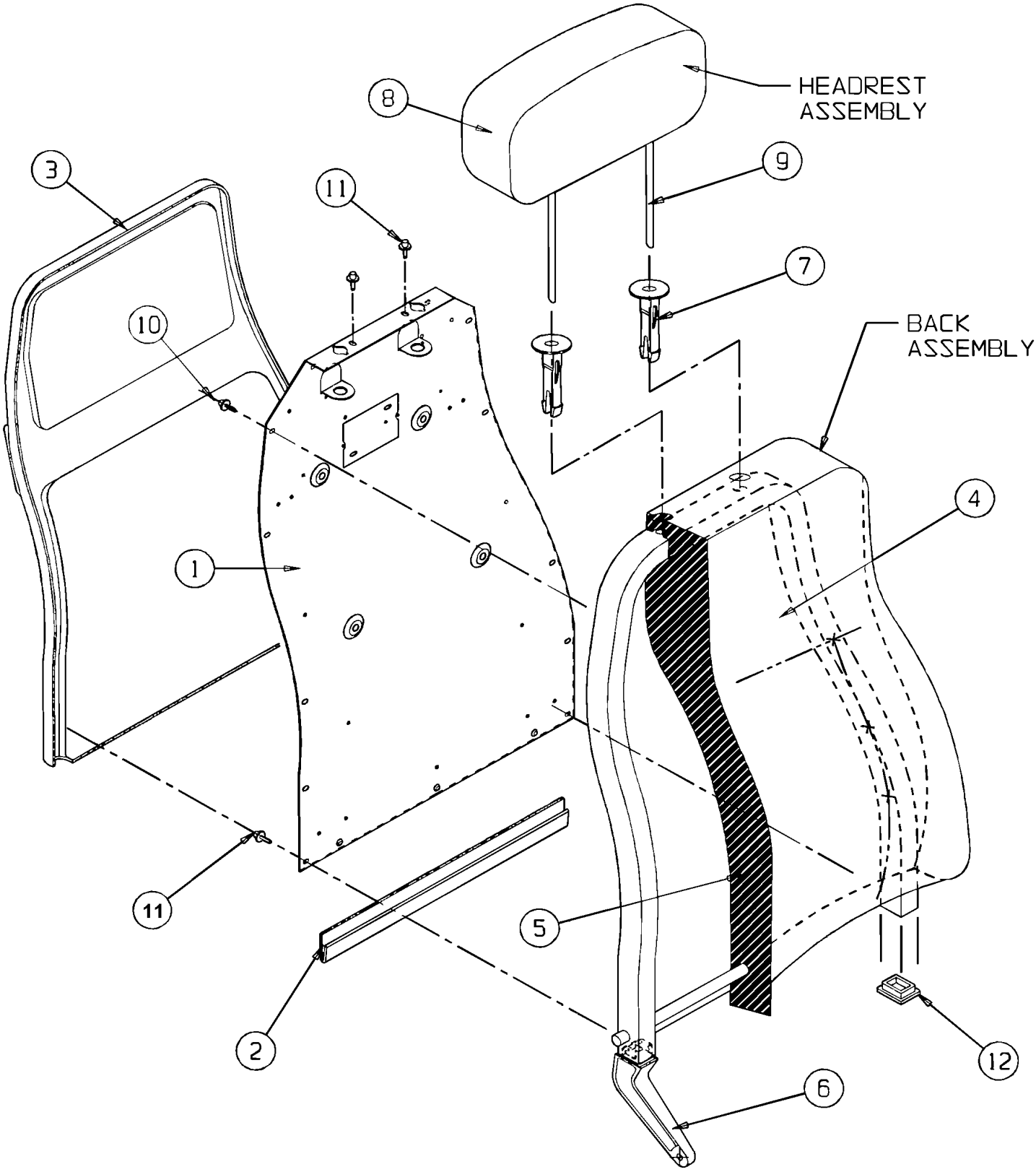

		Date:07/2024	PAGE:Y2-1825-31

PASSENGER'S SEAT - "AMERICAN" - BACKREST WX69

Item#	Part	Description	XLII 45	XLII MTH40	XLII MTH45	XLII MTH45E	NOTES
1	Call order desk	PANEL METAL INNER	1				P
2	Call order desk	EXTRUSION VINYL	1				P
3	**Y2-1825-60**	**PASSENGER'S SEAT - "AMERICAN" - BACK & ACCESS**					
4	N.P.N.	COVER BACK UPHOLSTERY	1				4
5	Call order desk	FOAM BACK - POLY FOAM	1				P A
5	Call order desk	FOAM BACK - POLY FOAM	1				P B
5	Call order desk	FOAM BACK - LOW SMOKE FOAM	1				P B
5	Call order desk	FOAM BACK - POLY FOAM	1				P C
5	Call order desk	FOAM BACK - LOW SMOKE FOAM	1				P C
5	Call order desk	FOAM BACK - POLY FOAM	1				P D
5	Call order desk	FOAM BACK - LOW SMOKE FOAM	1				P D
6	Call order desk	BACK FRAME & FOAM RH	1				P
6	Call order desk	BACK FRAME & FOAM LH	1				P
7	863800	BUSHING GUIDE	2				
8	N.P.N.	COVER HEADREST UPHOLSTERY	1				4
9	Call order desk	HEADREST ASSY - POLY FOAM	1				P E
9	Call order desk	HEADREST ASSY - POLY FOAM	1				P F
9	Call order desk	HEADREST ASSY - LOW SMOKE FOAM	1				P E
9	Call order desk	HEADREST ASSY - LOW SMOKE FOAM	1				P F
10	Call order desk	RIVET POP	12				P
11	Call order desk	RIVET POP	2				P
12	865892	PLUG CAP 1x1 1/4 BLK POLY	1				
		A) WITH SEAT MODEL W6694					
		B) WITH SEAT MODEL W6696					
		C) WITH SEAT MODEL W7694					
		D) WITH SEAT MODEL W7696					
		E) WITH SEAT MODEL W6694 & W6696					
		F) WITH SEAT MODEL W7694 & W7696					
		4) NO PARTS NUMBER					
		P) CALL ORDER DESK FOR SPECIFIC APPLICATION (V.I.N.)					

		Date:07/2024	PAGE:Y2-1825-40
PASSENGER'S SEAT - "AMERICAN" - FOOTREST			

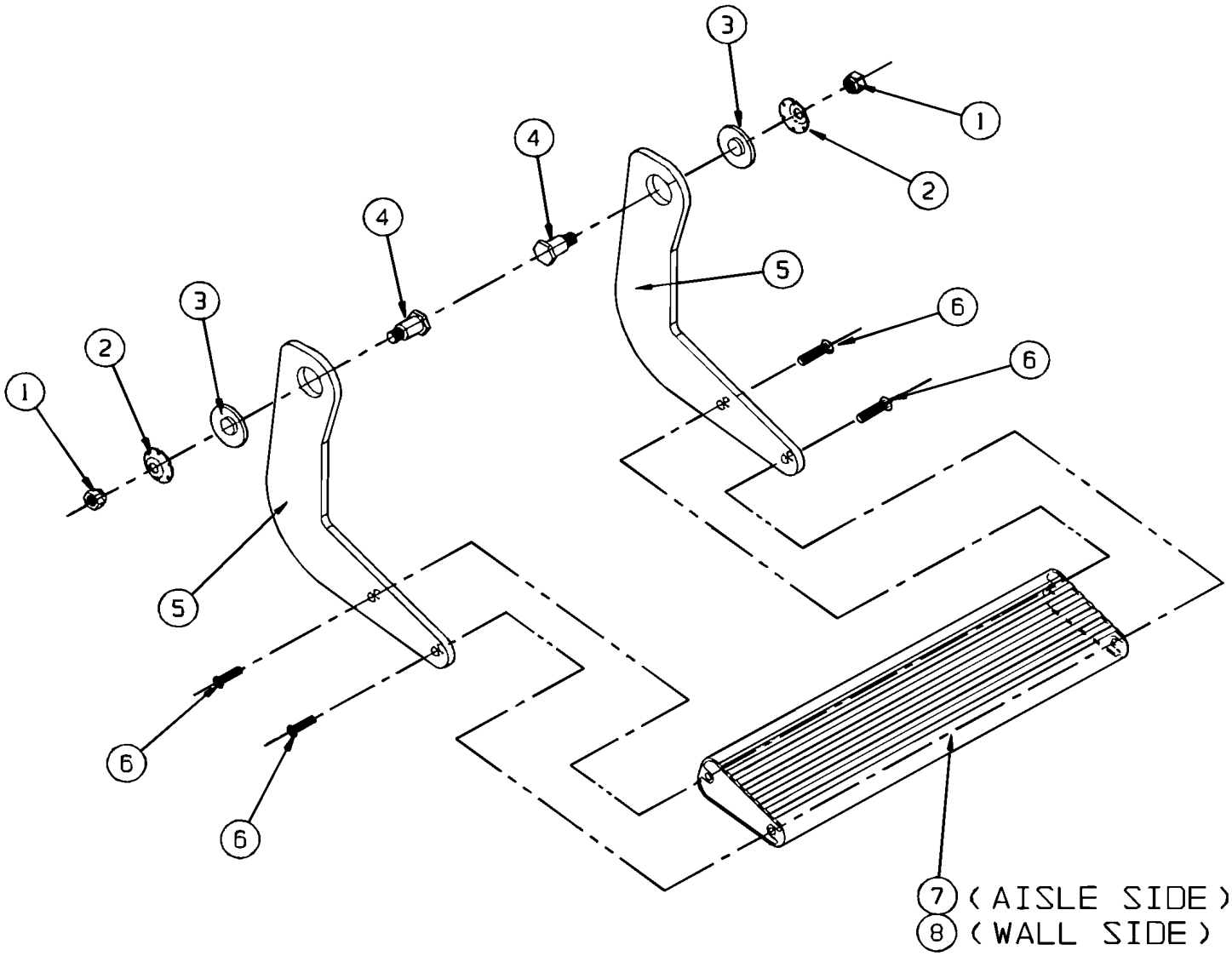

		Date:07/2024	PAGE:Y2-1825-40
PASSENGER'S SEAT - "AMERICAN" - FOOTREST			

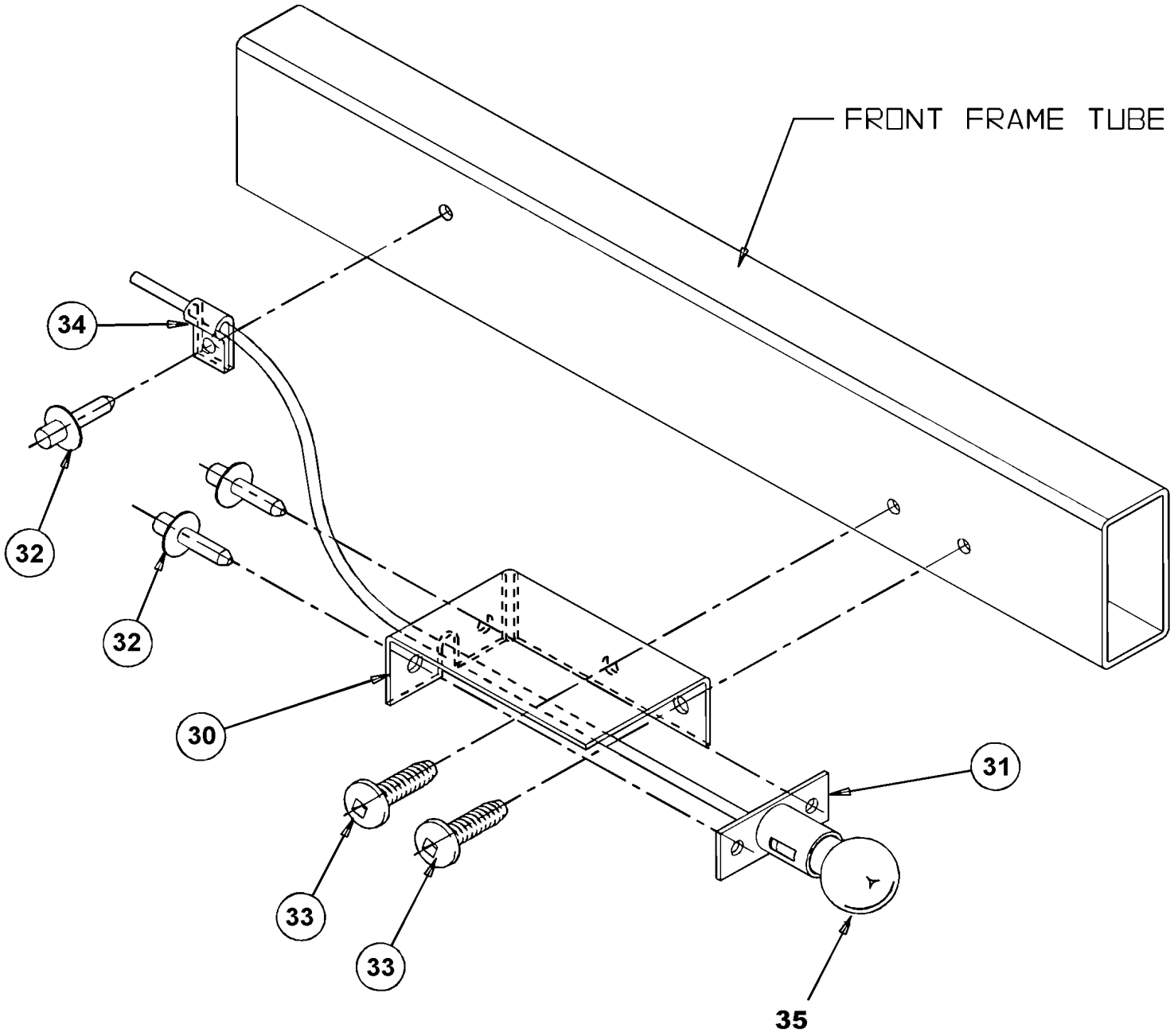

		Date:07/2024	PAGE:Y2-1825-40

PASSENGER'S SEAT - "AMERICAN" - FOOTREST

Item#	Part	Description	XLII 45	XLII MTH40	XLII MTH45	XLII MTH45E	NOTES
	864788	FOOTREST ASSY (AISLE SIDE)	1				
	Call order desk	FOOTREST ASSY (WALL SIDE)	1				P
1	Call order desk	. NUT HEX SLO 1/4-28	2				P
2	862724	. WASHER TENSIONER	2				
3	862723	. WASHER FL NYLON	2				
4	862722	. PIN PIVOT	2				
5	865126	. PLATE HANGER	2				
6	Call order desk	. SCREW MA PAN PH #10-24x3/4	4				P
7	Call order desk	. EXTRUSION FOOTREST (AISLE SIDE)	1				P
8	Call order desk	. EXTRUSION FOOTREST (WALL SIDE)	1				P
30	Call order desk	ASILE LITE ASSEMBLY	1				P
30	Call order desk	ASILE LITE ASSEMBLY (REVERSIBLE)	1				P A
30	Call order desk	. HOUSING ASILE LITE	1				P
30	Call order desk	. HOUSING ASILE LITE (REVERSIBLE)	1				P A
31	Call order desk	. LAMP SOCKET ASSEMBLY	1				P
32	504105	. RIVET POP DOME OE 1/8x3/16 AL	7				
33	Call order desk	. SCREW MA BUT SQ #6-32x1/2	2				P
34	Call order desk	. CLAMP	5				P
35	560141	. BULB / 3WATT-24VOLTS / SAE# 1251	AR				
35	563546	BULB / 7 LEDS BLUE / UNDER SEAT / #B607-2PB-028W	AR				
35	564100	BULB / 7 LEDS BLUE / UNDER SEAT / #270015	AR				
		A) WITH REVERSIBLE SEAT					
		P) CALL ORDER DESK FOR SPECIFIC APPLICATION (V.I.N.)					

		Date:07/2024	PAGE:Y2-1825-50
PASSENGER'S SEAT - "AMERICAN" - ARMREST			

CENTER ARM PACKAGE

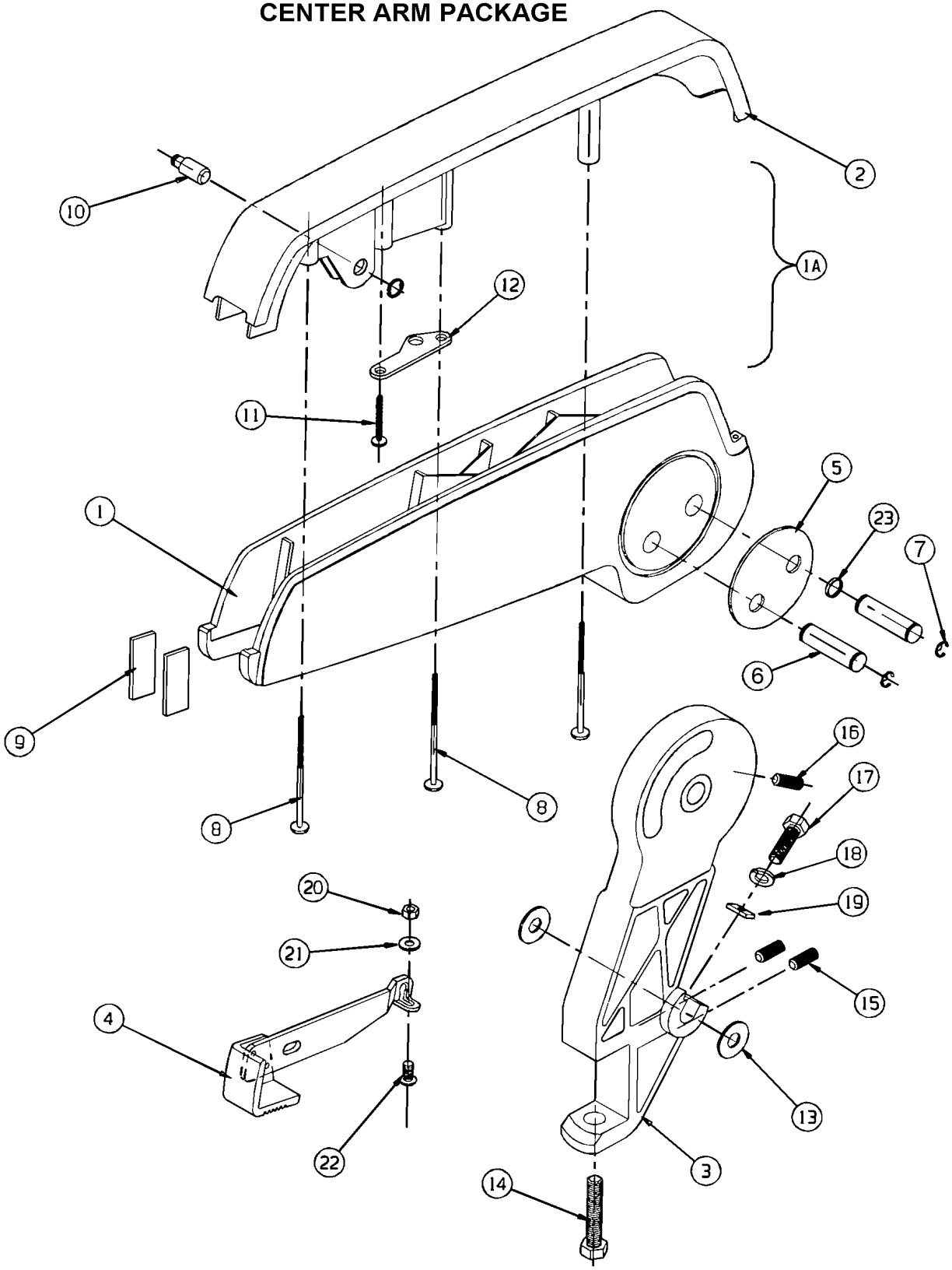

		Date:07/2024	PAGE:Y2-1825-50
PASSENGER'S SEAT - "AMERICAN" - ARMREST			

PIVOTING ARM ASSEMBLY

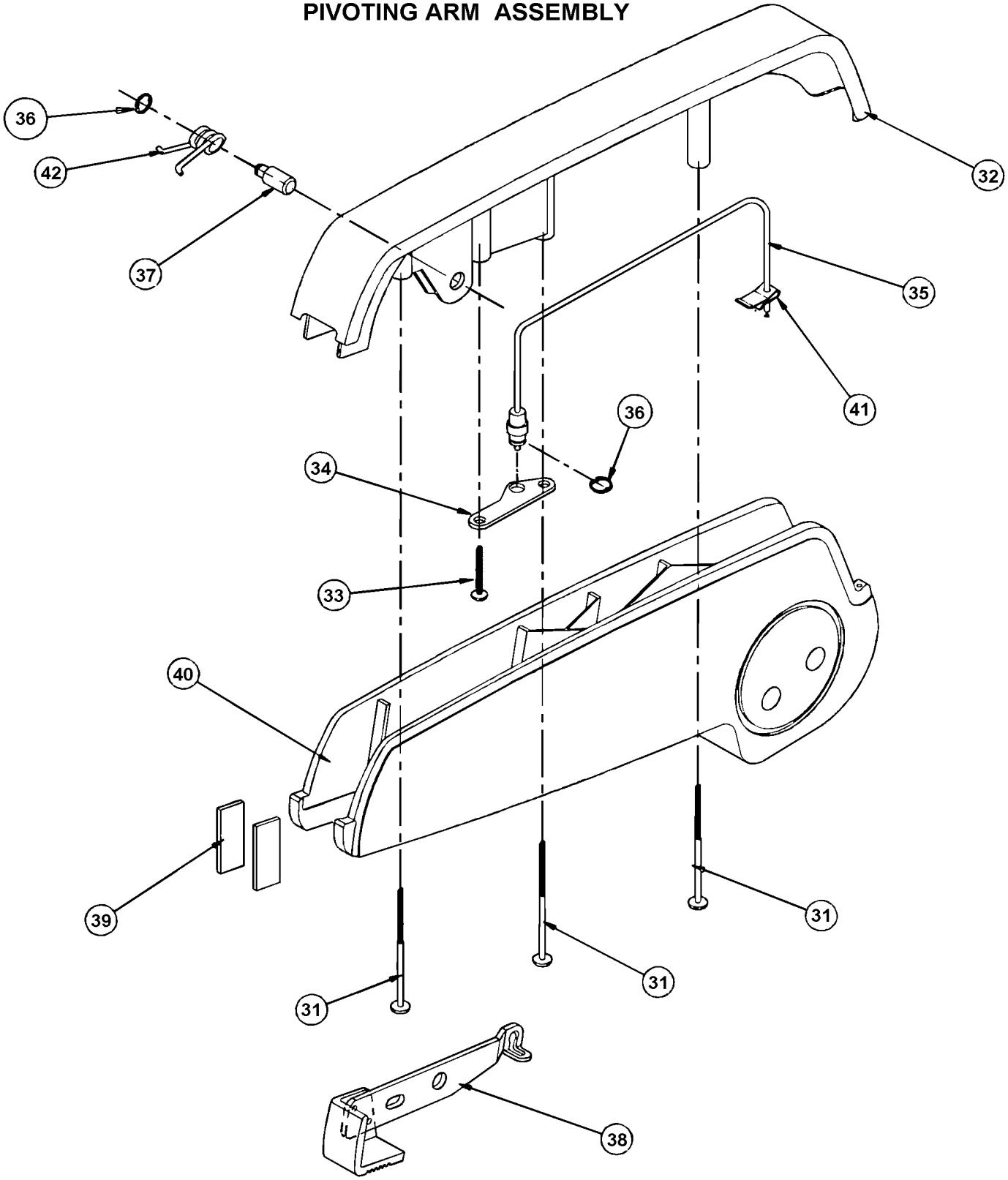

		Date:07/2024	PAGE:Y2-1825-50

PASSENGER'S SEAT - "AMERICAN" - ARMREST

Item#	Part	Description	XLII 45	XLII MTH40	XLII MTH45	XLII MTH45E	NOTES
	Call order desk	CENTER ARM PACKAGE	1				P
1	Call order desk	. ARM BASE	1				P
2	Call order desk	. CAP - ARM	1				P
3	Call order desk	. CASTING SUPPORT	1				P
4	Call order desk	. LEVER ASSY RECLINE	1				P
5	Call order desk	. PLATE REINFORCEMENT	2				P
6	Call order desk	. PIN - PIVOT	2				P
7	Call order desk	. RETAINER RING	4				P
8	Call order desk	. SCREW #10x2 1/4	3				P
9	Call order desk	. SOUND ABSORBER	2				P
10	Call order desk	. PIN - PIVOT RECLINE	1				P
11	Call order desk	. SCREW MA PAN PH #10-32	1				P
12	Call order desk	. PLATE - CABLE RETAINER	1				P
13	Call order desk	. WASHER FL NYL	2				P
14	Call order desk	. SCREW CAP HEX 3/8-16x2 1/2	1				P
15	Call order desk	. SCREW - SET 1/4-20	2				P
16	Call order desk	. SCREW - SET	1				P
17	865815	. SCREW CAP HEX 3/8-16x1 1/8	1				
18	Call order desk	. WASHER LO SPT	1				P
19	Call order desk	. PLATE RETAINER	1				P
20	Call order desk	. NUT HEX #6-32	1				P
21	Call order desk	. WASHER FL	1				P
22	Call order desk	. SCREW CAP HEX #6-32x1/2	1				P
23	865884	. WASHER SPR WAVE	1				
NS	Call order desk	ARM ASSY	1				P A
30	865803	PIVOTING ARM ASSY	1				
31	Call order desk	. SCREW #10x2 1/4	3				P
32	Call order desk	. CAP - ARM	1				P
33	Call order desk	. SCREW MA PAN PH #10-32	1				P
34	Call order desk	. PLATE - CABLE RETAINER	1				P
35	864192	. CABLE PORTER RELEASE	1				
36	Call order desk	. E-RING - BOWED	2				P
37	Call order desk	. PIN - PIVOT RECLINE	1				P
38	Call order desk	. LEVER ASSY RECLINE	1				P
39	Call order desk	. SOUND ABSORBER	2				P
40	Call order desk	. ARM BASE	1				P
41	861486	. CLIP / WIRE RETAINER	1				
42	Call order desk	. SPRING RETURN	1				P

		Date:07/2024	PAGE:Y2-1825-50

PASSENGER'S SEAT - "AMERICAN" - ARMREST

Item#	Part	Description	XLII 45	XLII MTH40	XLII MTH45	XLII MTH45E	NOTES
		A) INCLUDE ITEMS 1 & 3					
		P) CALL ORDER DESK FOR SPECIFIC APPLICATION (V.I.N.)					

		Date:07/2024	PAGE:Y2-1825-51
PASSENGER'S SEAT - "AMERICAN" - ARMREST SERIES 2000 & MORE			

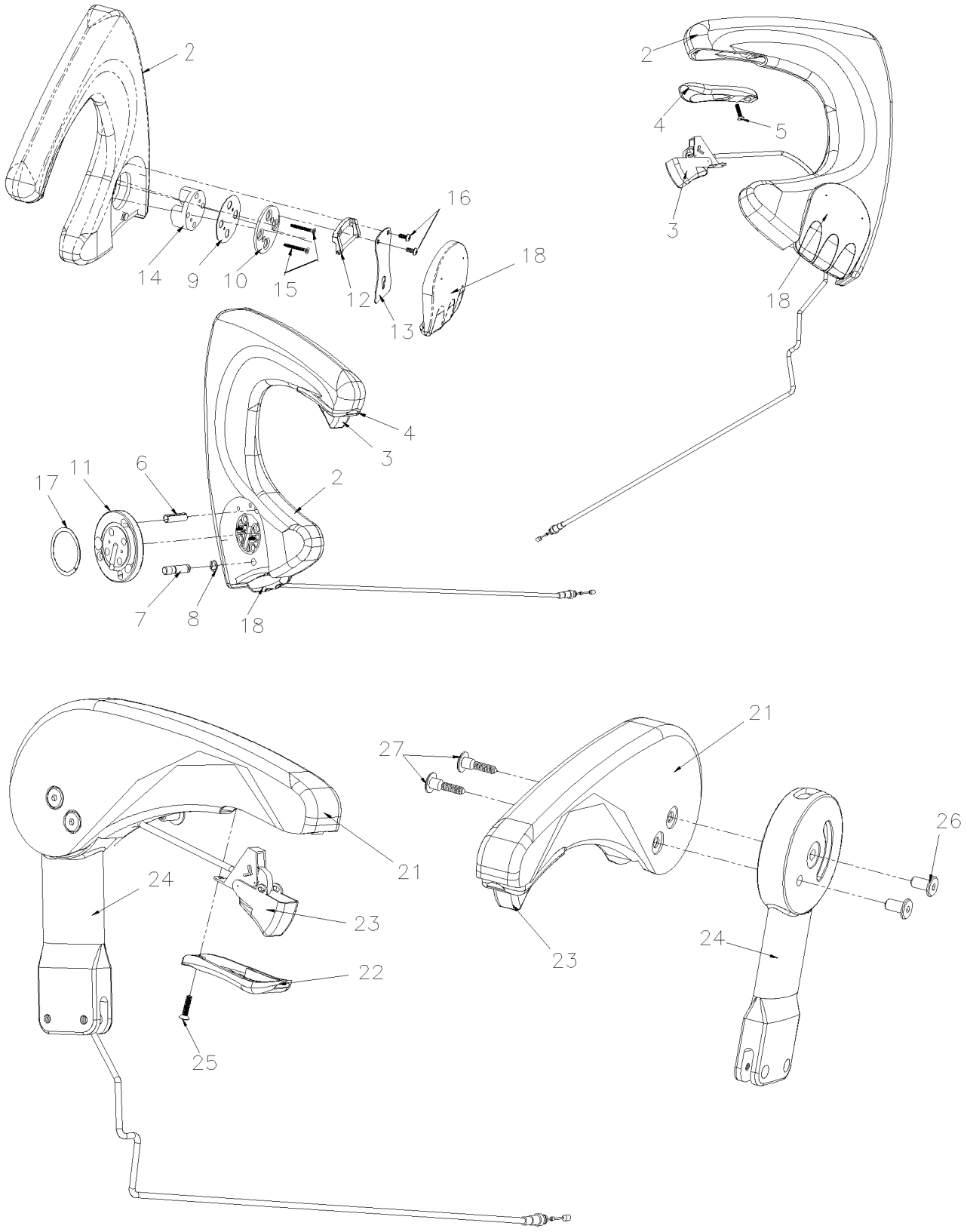

		Date:07/2024	PAGE:Y2-1825-51

PASSENGER'S SEAT - "AMERICAN" - ARMREST SERIES 2000 & MORE

Item#	Part	Description	XLII 45	XLII MTH40	XLII MTH45	XLII MTH45E	NOTES
1	Call order desk	ARM ASSY L.H. (FOLD-DOWN)	1				P
1	Call order desk	. ARM WELDMENT AISLE	1				P
2	Call order desk	. ARM AISLE	1				P
3	196436	. CABLE ASSY RELEASE	1				
4	865349	. BEZEL	1				
5	865887	. SCREW MA FL PH #8-18x3/4	1				
6	Call order desk	. PIN SLOTTER 5/16"x1 1/4"	1				P
7	Call order desk	. LOCK PIN	1				P
8	Call order desk	. E-RING	1				P
9	Call order desk	. PLATE END WASHER	1				P
10	Call order desk	. PLATE END	1				P
11	Call order desk	. PLATE INDEX	1				P
12	Call order desk	. BRACKET ARMREST PIVOT	1				P
13	Call order desk	. SPRING HANDLE	1				P
14	Call order desk	. HUB	1				P
15	Call order desk	. SCREW #10-24x3/4 SR P	2				P
16	Call order desk	. SCREW BUT HEAD #8x7/8" CRO	2				P
17	Call order desk	. WASHER, WAVE	1				P
18	864092	. HANDLE PIVOT	1				
20	Call order desk	ARM ASSY STATIONARY WALL SIDE	1				P
21	Call order desk	. ARM AISLE	1				P
22	865349	. BEZEL	1				
23	196436	. CABLE ASSY RELEASE	1				
24	865888	. CASTING ARM EXTENSION RH	1				
25	865887	. SCREW MA FL PH #8-18x3/4	1				
26	865886	. NUT JCN-CAP 1/4-20	2				
27	865885	. BOLT LOW PROFILE 1/4-20	2				
		P) CALL ORDER DESK FOR SPECIFIC APPLICATION (V.I.N.)					

		Date:07/2024	PAGE:Y2-1825-60
PASSENGER'S SEAT - "AMERICAN" - BACK & ACCESS			

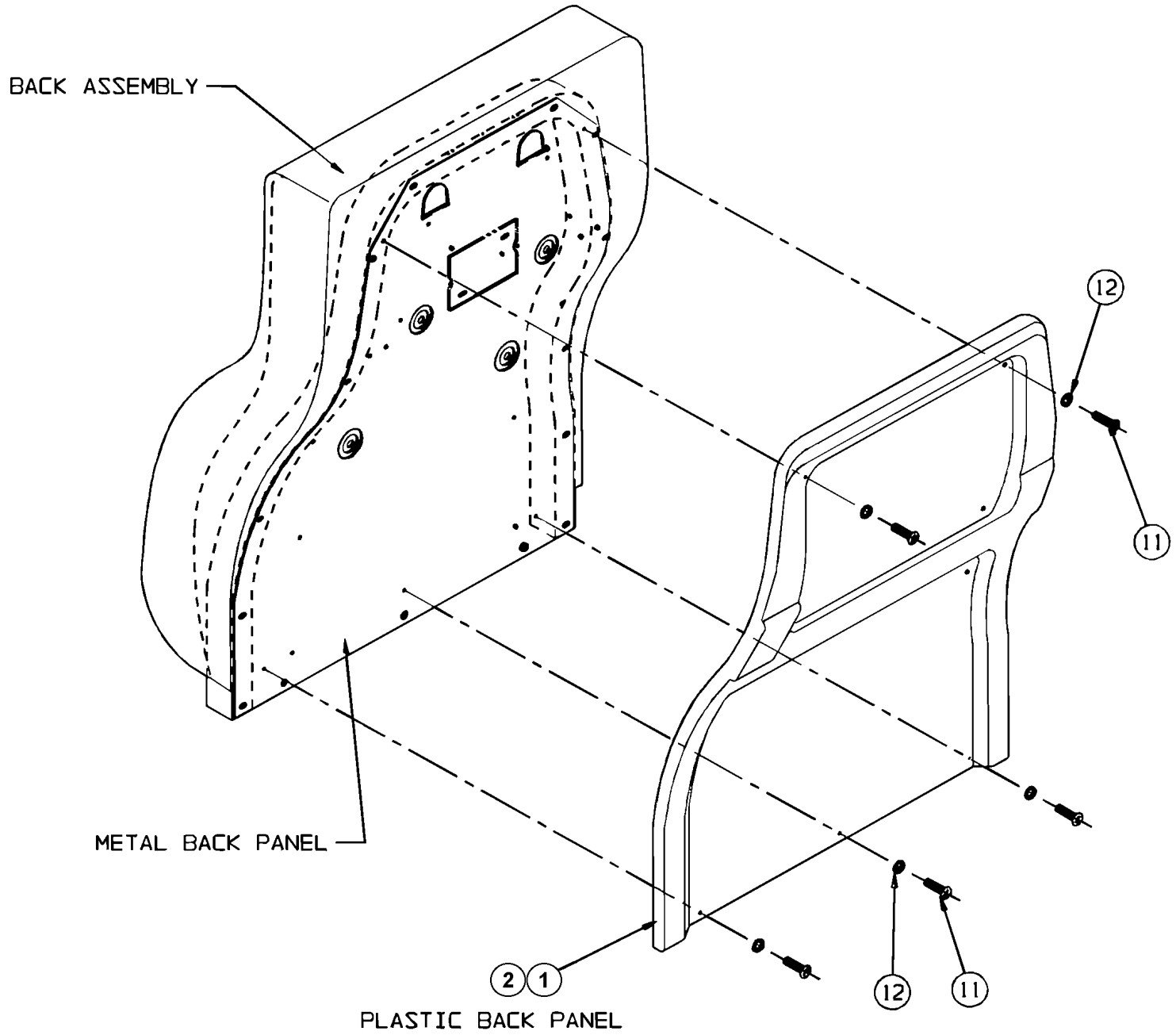

		Date:07/2024	PAGE:Y2-1825-60
PASSENGER'S SEAT - "AMERICAN" - BACK & ACCESS			

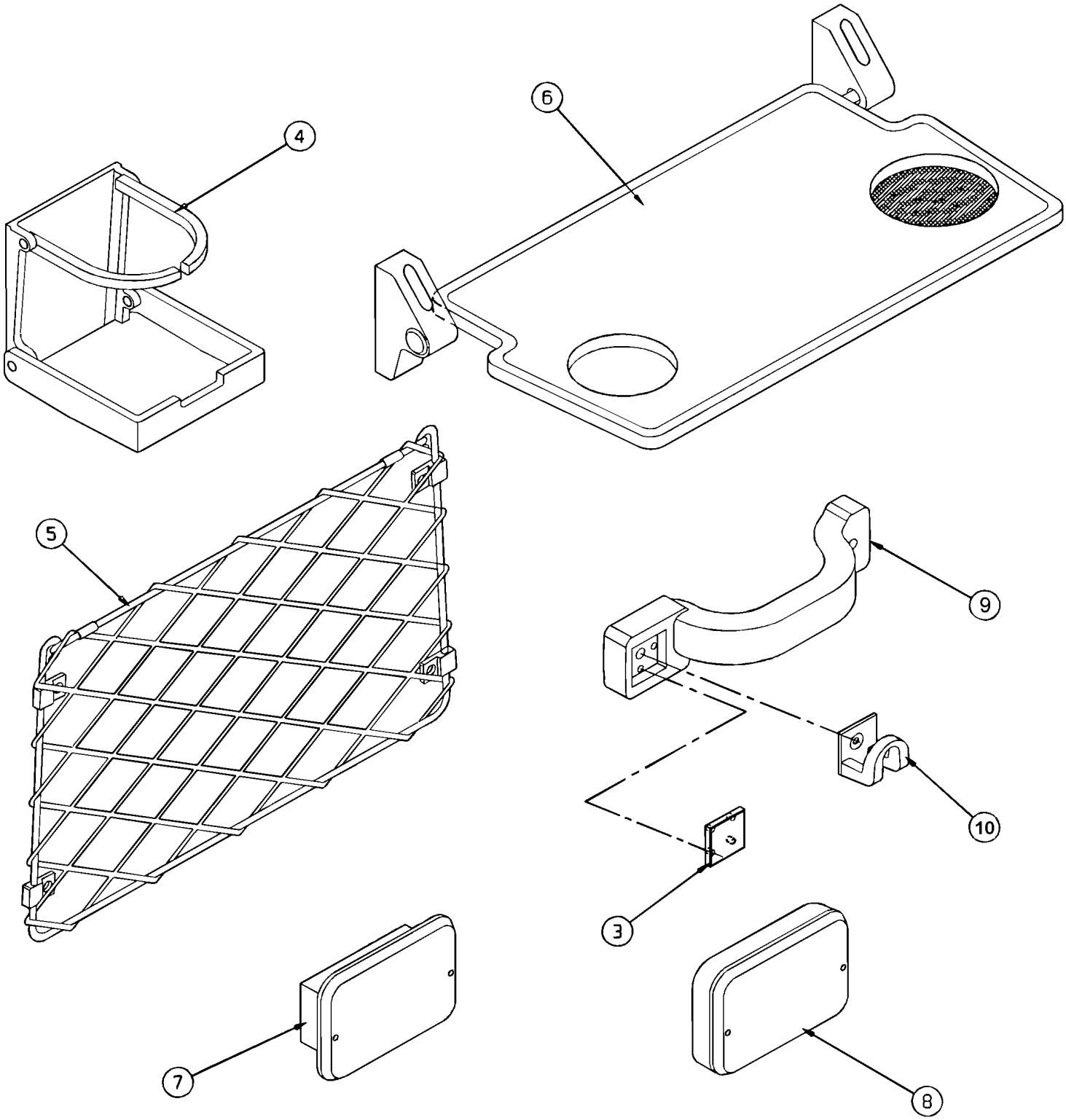

		Date:07/2024	PAGE:Y2-1825-60

PASSENGER'S SEAT - "AMERICAN" - BACK & ACCESS

Item#	Part	Description	XLII 45	XLII MTH40	XLII MTH45	XLII MTH45E	NOTES
1	Call order desk	PANEL W/O OPTIONS - CHARCOAL	1				P A
1	Call order desk	PANEL W/O OPTIONS - RED	1				P A
1	Call order desk	PANEL W/O OPTIONS - BLUE	1				P A
1	Call order desk	PANEL W/O OPTIONS - BROWN	1				P A
1	Call order desk	PANEL W/GRABHANDLE & COAT HOOK - CHARCOAL	1				P A
1	Call order desk	PANEL W/GRABHANDLE & COAT HOOK - RED	1				P A
1	Call order desk	PANEL W/GRABHANDLE & COAT HOOK - BLUE	1				P A
1	Call order desk	PANEL W/GRABHANDLE & COAT HOOK - BROWN	1				P A
1	Call order desk	PANEL W/MAGAZINE POCKET - CHARCOAL	1				P A
1	Call order desk	PANEL W/MAGAZINE POCKET - RED	1				P A
1	Call order desk	PANEL W/MAGAZINE POCKET - BLUE	1				P A
1	Call order desk	PANEL W/MAGAZINE POCKET - BROWN	1				P A
1	Call order desk	PANEL W/MAGAZINE POCKET & CUP HOLDER - CHARCOAL	1				P A
1	Call order desk	PANEL W/MAGAZINE POCKET & CUP HOLDER - RED	1				P A
1	Call order desk	PANEL W/MAGAZINE POCKET & CUP HOLDER - BLUE	1				P A
1	Call order desk	PANEL W/MAGAZINE POCKET & CUP HOLDER - BROWN	1				P A
1	Call order desk	PANEL W/MAGAZINE POCKET & GRABHANDLE - CHARCOAL	1				P A
1	Call order desk	PANEL W/MAGAZINE POCKET & GRABHANDLE - RED	1				P A
1	Call order desk	PANEL W/MAGAZINE POCKET & GRABHANDLE - BLUE	1				P A
1	Call order desk	PANEL W/MAGAZINE POCKET & GRABHANDLE - BROWN	1				P A
1	Call order desk	PANEL W/MAGAZINE POCKET & RECESSED ASHTRAY - CHARCOAL	1				P A
1	Call order desk	PANEL W/MAGAZINE POCKET & RECESSED ASHTRAY - RED	1				P A
1	Call order desk	PANEL W/MAGAZINE POCKET & RECESSED ASHTRAY - BLUE	1				P A
1	Call order desk	PANEL W/MAGAZINE POCKET & RECESSED ASHTRAY - BROWN	1				P A
1	Call order desk	PANEL W/MAGAZINE POCKET & SNACK TRAYS - CHARCOAL	1				P A
1	Call order desk	PANEL W/MAGAZINE POCKET & SNACK TRAYS - RED	1				P A
1	Call order desk	PANEL W/MAGAZINE POCKET & SNACK TRAYS - BLUE	1				P A
1	Call order desk	PANEL W/MAGAZINE POCKET & SNACK TRAYS - BROWN	1				P A
1	Call order desk	PANEL W/RECESSED ASHTRAY - CHARCOAL	1				P A
1	Call order desk	PANEL W/RECESSED ASHTRAY - RED	1				P A
1	Call order desk	PANEL W/RECESSED ASHTRAY - BLUE	1				P A
1	Call order desk	PANEL W/RECESSED ASHTRAY - BROWN	1				P A
1	Call order desk	PANEL W/SNACK TRAYS - CHARCOAL	1				P A
1	Call order desk	PANEL W/SNACK TRAYS - RED	1				P A
1	Call order desk	PANEL W/SNACK TRAYS - BLUE	1				P A
1	Call order desk	PANEL W/SNACK TRAYS - BROWN	1				P A
2	Call order desk	PANEL W/O OPTIONS - CHARCOAL	1				P B
2	Call order desk	PANEL W/O OPTIONS - RED	1				P B
2	Call order desk	PANEL W/O OPTIONS - BLUE	1				P B
2	Call order desk	PANEL W/O OPTIONS - BROWN	1				P B
2	Call order desk	PANEL W/COAT HOOK - CHARCOAL	1				P B

		Date:07/2024	PAGE:Y2-1825-60

PASSENGER'S SEAT - "AMERICAN" - BACK & ACCESS

Item#	Part	Description	XLII 45	XLII MTH40	XLII MTH45	XLII MTH45E	NOTES
2	Call order desk	PANEL W/COAT HOOK - RED	1				P B
2	Call order desk	PANEL W/COAT HOOK - BLUE	1				P B
2	Call order desk	PANEL W/COAT HOOK - BROWN	1				P B
2	Call order desk	PANEL W/CUP HOLDER - CHARCOAL	1				P B
2	Call order desk	PANEL W/CUP HOLDER - RED	1				P B
2	Call order desk	PANEL W/CUP HOLDER - BLUE	1				P B
2	Call order desk	PANEL W/CUP HOLDER - BROWN	1				P B
2	Call order desk	PANEL W/GRABHANDLE & COAT HOOK - CHARCOAL	1				P B
2	Call order desk	PANEL W/GRABHANDLE & COAT HOOK - RED	1				P B
2	Call order desk	PANEL W/GRABHANDLE & COAT HOOK - BLUE	1				P B
2	Call order desk	PANEL W/GRABHANDLE & COAT HOOK - BROWN	1				P B
2	Call order desk	PANEL W/GRABHANDLE & RECESSED ASHTRAY - CHARCOAL	1				P B
2	Call order desk	PANEL W/GRABHANDLE & RECESSED ASHTRAY - RED	1				P B
2	Call order desk	PANEL W/GRABHANDLE & RECESSED ASHTRAY - BLUE	1				P B
2	Call order desk	PANEL W/GRABHANDLE & RECESSED ASHTRAY - BROWN	1				P B
2	Call order desk	PANEL W/MAGAZINE POCKET - CHARCOAL	1				P B
2	Call order desk	PANEL W/MAGAZINE POCKET - RED	1				P B
2	Call order desk	PANEL W/MAGAZINE POCKET - BLUE	1				P B
2	Call order desk	PANEL W/MAGAZINE POCKET - BROWN	1				P B
2	Call order desk	PANEL W/MAGAZINE POCKET & GRABHANDLE - CHARCOAL	1				P B
2	Call order desk	PANEL W/MAGAZINE POCKET & GRABHANDLE - RED	1				P B
2	Call order desk	PANEL W/MAGAZINE POCKET & GRABHANDLE - BLUE	1				P B
2	Call order desk	PANEL W/MAGAZINE POCKET & GRABHANDLE - BROWN	1				P B
2	Call order desk	PANEL W/MAGAZINE POCKET & RECESSED ASHTRAY - CHARCOAL	1				P B
2	Call order desk	PANEL W/MAGAZINE POCKET & RECESSED ASHTRAY - RED	1				P B
2	Call order desk	PANEL W/MAGAZINE POCKET & RECESSED ASHTRAY - BLUE	1				P B
2	Call order desk	PANEL W/MAGAZINE POCKET & RECESSED ASHTRAY - BROWN	1				P B
2	Call order desk	PANEL W/RECESSED ASHTRAY - CHARCOAL	1				P B
2	Call order desk	PANEL W/RECESSED ASHTRAY - RED	1				P B
2	Call order desk	PANEL W/RECESSED ASHTRAY - BLUE	1				P B
2	Call order desk	PANEL W/RECESSED ASHTRAY - BROWN	1				P B
2	Call order desk	PANEL W/SNACK TRAYS - CHARCOAL	1				P B
2	Call order desk	PANEL W/SNACK TRAYS - RED	1				P B
2	Call order desk	PANEL W/SNACK TRAYS - BLUE	1				P B
2	Call order desk	PANEL W/SNACK TRAYS - BROWN	1				P B
3	284049	. PLUG / SQUARE / BLACK	1				
4	900527	. GLASS HOLDER	1				
5	866007	. MAGAZINE POCKET	1				
6	860657	. SHELF	1				
7	Call order desk	. ASHTRAY - RECESSED	1				P
8	Call order desk	. ASHTRAY - SURFACED MTD	1				P

		Date:07/2024	PAGE:Y2-1825-60

PASSENGER'S SEAT - "AMERICAN" - BACK & ACCESS

Item#	Part	Description	XLII 45	XLII MTH40	XLII MTH45	XLII MTH45E	NOTES
9	860422	. HANDLE	1				
NS	Call order desk	. SCREW #8 1" TYPE AB	AR				P
NS	Call order desk	. SCREW TC #8-32x1	AR				P
10	860421	. HOOK	1				
11	Call order desk	SCREW PLASTIC PANEL	9				P
12	Call order desk	WASHER NYL	9				P
		A) WITH SEAT MODEL W6693 & W7693					
		B) WITH SEAT MODEL W6694, W7694, W6696 & W7696					
		P) CALL ORDER DESK FOR SPECIFIC APPLICATION (V.I.N.)					

		Date:07/2024	PAGE:Y2-1826-00
PASSENGER'S SEAT - "NATIONAL" - 4209 & 4210			

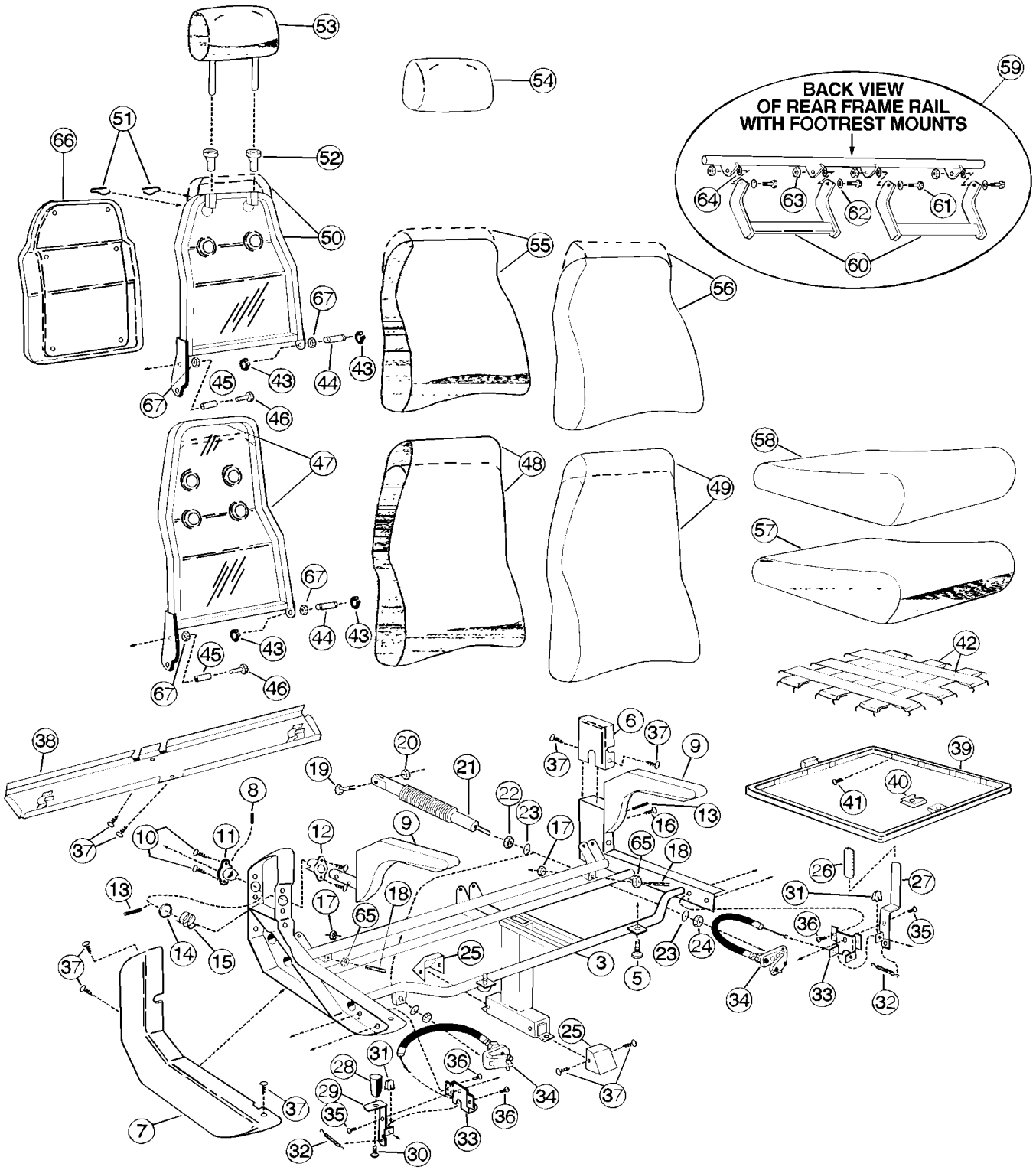

		Date:07/2024	PAGE:Y2-1826-00
PASSENGER'S SEAT - "NATIONAL" - 4209 & 4210			

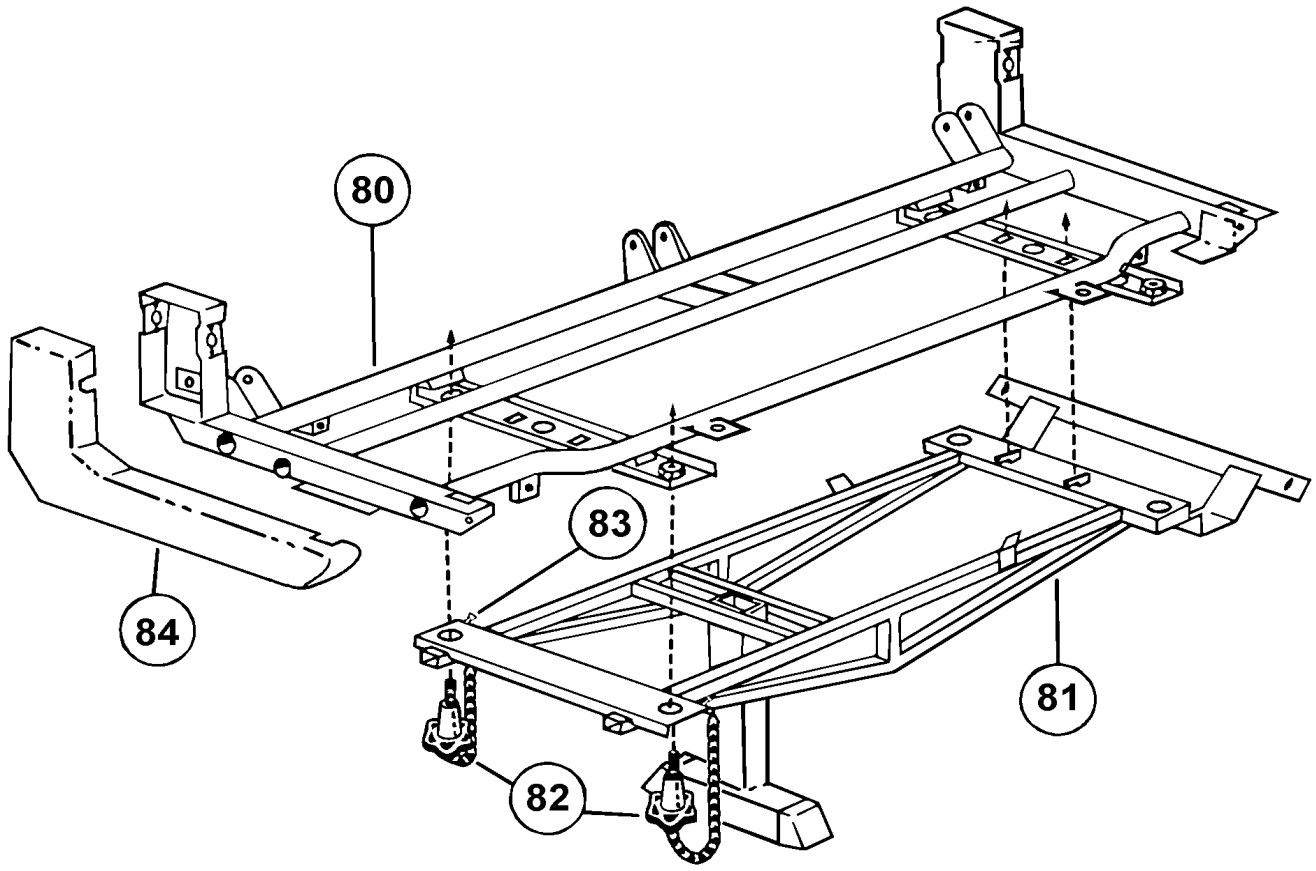

		Date:07/2024	PAGE:Y2-1826-00

PASSENGER'S SEAT - "NATIONAL" - 4209 & 4210

Item#	Part	Description	XLII 45	XLII MTH40	XLII MTH45	XLII MTH45E	NOTES
		IMPORTANT NOTE:					
		TO ORDER COMPLETE PASSENGER'S SEAT KIT #,					
		SEE THE FINAL VEHICLE RECORD.					
3	863291	PAINTED FRAME ASSY W/FOOTREST BRACKET - L.H.	1				
3	864790	PAINTED FRAME ASSY W/FOOTREST BRACKET - R.H.	1				
3	Call order desk	PAINTED FRAME ASSY W/O FOOTREST BRACKET - L.H.	1				P
3	Call order desk	PAINTED FRAME ASSY W/O FOOTREST BRACKET - R.H.	1				P
3	Call order desk	KIT	1				P A
5	865988	SCREW TP TR PH #8-32x1/2	2				
6	Call order desk	TRIM PANEL - WALL SIDE	2				P B
7	864090	TRIM PANEL - AISLE SIDE - CURBSIDE	1				
7	864091	TRIM PANEL - AISLE SIDE - STREET SIDE	1				
8	860054	ROLL PIN 3/16" X 1/2"	2				
9	865648	FOLD DOWN ARM	2				B
10	865988	SCREW TP TR PH #8-32x1/2	8				
11	192318	BUSHING - WELDED	1				
12	866239	BUSHING ARM - P/M	3				
13	860055	ROLL PIN 1/4" X 1 1/8"	2				
14	860056	WASHER	2				
15	860057	SPRING - ARM	2				
16	Call order desk	SCREW TC CAP HEX 1/4-20x3/4	1				P
17	502600	NUT HEX NYRT 5/16-18 Z050	2				
18	Call order desk	SCREW SET HEXS CUP 5/16-18x1 3/4	2				P
19	Call order desk	SCREW CAP HEX 5/16-18x1.00 HD	2				P
20	500181	SCREW CAP HEX 5/16-18x1 G5 Z050	2				
21	863598	ACTUATOR	2				
22	500705	NUT HEX 3/8-24 ZP	2				
23	Call order desk	WASHER SPHERICAL 3/8"	4				P
24	502592	NUT HEX THN 3/8-24x3/32 Z050	2				
25	195894	PEDESTRAL CAP	2				
NS	500305	SCREW CAP HEX 3/8-16x7/8 G5 Z050	2				
NS	500478	WASHER LO SPT .380x.683x.094 Z050	2				
NS	500270	WASHER FL .406x1.000x.063 SS	2				
NS	362627	PLATE ANCHOR / 3/8-16 BOLT INSIDE TRACK / 1 1/4" X 1 1/4"	2				
26	860205	HANDLE BOOT - WALL SIDE	1				
27	864618	HANDLE ACTUATOR - WALL SIDE	1				
28	195895	KNOB	1				
29	864862	HANDLE ACTUATOR - AISLE SIDE	1				C
30	Call order desk	SCREW MA TR PH 1/4-20x3/4	1				P
31	864394	CABLE ATTACHMENT SPRING CLIP	2				
32	Call order desk	SPRING LINK RETURN	2				P

		Date:07/2024	PAGE:Y2-1826-00

PASSENGER'S SEAT - "NATIONAL" - 4209 & 4210

Item#	Part	Description	XLII 45	XLII MTH40	XLII MTH45	XLII MTH45E	NOTES
33	864121	ACTUATOR CABLE BRACKET	2				
34	863290	OUTPUT & CABLE ASSY 12"	2				
34	863803	OUTPUT & CABLE ASSY 26"	2				
35	Call order desk	RIVET	2				P
36	Call order desk	RIVET	4				P
37	862355	SCREW TP TR PH #10x1/2	11				
38	Call order desk	TRIM PANEL ASSY	1				P B
39	Call order desk	CUSHION FRAME ASSY	2				P
39	Call order desk	CUSHION BOARD (3 PASS SEAT)	3				P
40	502935	NUT SPR U 5/16-18 .025-.150	2				
41	Call order desk	STUD D.O.T.	32				P
42	865214	LATEX WEBBING	12				
43	866244	TRUARC RETAINING RING	2				
44	868726	PIN - CENTER PIVOT - 4209 HIGH BACK / 4210	1				
44	Call order desk	PIN - CENTER PIVOT - 4209/10 W/CTR. FLDG. OR 4209 LOW BACK	1				P
44	Call order desk	PIN - CENTER PIVOT - 4209 LOW BACK	1				P
45	865989	PIN - PIVOT	2				
46	193005	SCREW CAP HEX 1/4-20x2.000	2				
47	Call order desk	BACK FRAME ASSY - L.H. - 4209 HIGH BACK	1				P
47	Call order desk	BACK FRAME ASSY - R.H. - 4209 HIGH BACK	1				P
47	Call order desk	BACK FRAME ASSY - L.H. - 4209 LOW BACK	1				P
47	Call order desk	BACK FRAME ASSY - R.H. - 4209 LOW BACK	1				P
47	Call order desk	BACK BOARD - INDIVIDUAL (3 PASS SEAT)	3				P
48	Call order desk	BACK POLY - 4209A HIGH BACK	2				P
48	Call order desk	BACK POLY - 4209A (3 PASS SEAT)	3				P
48	Call order desk	BACK POLY - 4209A LOW BACK	2				P
49	Call order desk	BACK COVER - 4209A HIGH BACK	2				P
49	Call order desk	BACK COVER - 4209A (3 PASS SEAT)	3				P
49	Call order desk	BACK COVER - 4209A LOW BACK	2				P
50	Call order desk	BACK FRAME ASSY - L.H. 4210 LOW BACK	1				P
50	Call order desk	BACK FRAME ASSY - R.H. 4210 LOW BACK	1				P
50	Call order desk	BACK FRAME ASSY - L.H. 4210 HIGH BACK	1				P
50	862738	BACK FRAME ASSY - R.H. 4210 HIGH BACK	1				
50	Call order desk	BACK BOARD - INDIVIDUAL (3 PASS SEAT)	3				P
51	860186	SPRING CLIP - HEADREST - 4210	4				
52	860031	BUSHING - HEADREST - 4210	4				
53	863770	HEADREST POLY - FLAT - 4210 LOW BACK	1				
53	Call order desk	HEADREST POLY - FLAT - 4210 (3 PASS SEAT)	3				P
53	863728	HEADREST BOARD - 4210	3				
53	863729	HEADREST POLY ASSY - 4210 HIGH BACK	2				
54	Call order desk	HEADREST COVER - FLAT - 4210 LOW BACK	2				P
54	862739	HEADREST COVER - FLAT - 4210 HIGH BACK / S.C.C.	1				

		Date:07/2024	PAGE:Y2-1826-00

PASSENGER'S SEAT - "NATIONAL" - 4209 & 4210

Item#	Part	Description	XLII 45	XLII MTH40	XLII MTH45	XLII MTH45E	NOTES
54	863771	HEADREST COVER - FLAT - 4210 LOW BACK / S.C.C.	1				
54	Call order desk	HEADREST COVER - FLAT - 4210 (3 PASS SEAT)	3				P
55	Call order desk	BACK POLY - 4210A LOW BACK	2				P
55	Call order desk	BACK POLY - 4210 (3 PASS SEAT)	3				P
55	Call order desk	BACK POLY - 4210A HIGH BACK	2				P
56	Call order desk	BACK COVER - 4210A LOW BACK	2				P
56	Call order desk	BACK COVER - 4210A (3 PASS SEAT)	3				P
56	Call order desk	BACK COVER - 4210A HIGH BACK	2				P
57	860037	CUSHION POLY - 4209A & 4210A	2				
57	Call order desk	CUSHION POLY	3				P
58	862740	CUSHION COVER - 4209A & 4210A S.C.C.	1				
58	Call order desk	CUSHION COVER	3				P
59	Call order desk	FOOTREST INSTALLATION	1				P
60	860444	FOOTREST CENTRAL SECTION	1				
60	864791	HANGER & TREADLE ASSY UP TO MARCH 2000	2				
. NS	864037	. SPRING	AR				
. NS	865264	. BRACKET	AR				
. NS	865263	. BOLT	AR				
60	864099	HANGER & TREADLE ASSY (RETROFIT KIT) FROM MARCH 2000	AR				
. NS	864037	. SPRING	AR				
. NS	865264	. BRACKET	AR				
. NS	865263	. BOLT	AR				
61	863625	FOOTREST PIVOT PIN	4				
62	500476	WASHER LO SPT .317x.586x.078 Z050	4				
63	863626	NUT HEX 5/16-24	4				
64	863627	BEARING - FOOTREST	4				
65	500701	NUT HEX 5/16-18 ZP	2				
66	Call order desk	PANEL-BACK (OPTIONAL) 4210 BIG	2				P B
66	Call order desk	PANEL-BACK (OPTIONAL) 4210 SMALL	2				P
67	864147	BUSHING - BACK PIVOT	4				
80	N.S.S.	PAINTED FRAME ASSY - UPPER W/FOOTREST BRACKET	1				1
80	N.S.S.	PAINTED FRAME ASSY - UPPER W/O FOOTREST BRACKET	1				1
81	863757	PAINTED FRAME ASSY - LOWER	1				
82	196686	ATTACHMENT KNOB ASSY	2				
83	Call order desk	SOUTHCO DRIVE RIVET	2				P
84	N.S.S.	TRIM PANEL - L.H. W/O ACCENT	1				1
84	N.S.S.	TRIM PANEL - R.H. W/O ACCENT	1				1
NS	192360	GLASS HOLDER "NATIONAL	AR				
NS	195960	NET MAGAZINE "NATIONAL"	AR				
NS	860018	CLAMP ASSY / TO FIX SEAT TO THE WALL	AR				

		Date:07/2024	PAGE:Y2-1826-00

PASSENGER'S SEAT - "NATIONAL" - 4209 & 4210

Item#	Part	Description	XLII 45	XLII MTH40	XLII MTH45	XLII MTH45E	NOTES
		A) FOR SEAT PRIO MARCH 1997					
		B) A.R. = POSTITION AND COLOR					
		C) RELEASE HANDLE WITH KNOB USED ON AISLE SIDE STANDARD SEAT AND BOTH SIDES OF REVERSIBLE SEAT					
		1) NOT SOLD SEPARATELY					
		P) CALL ORDER DESK FOR SPECIFIC APPLICATION (V.I.N.)					

		Date:07/2024	PAGE:Y2-1826-05
PASSENGER'S SEAT - "AMAYA" "EUROTECH"			

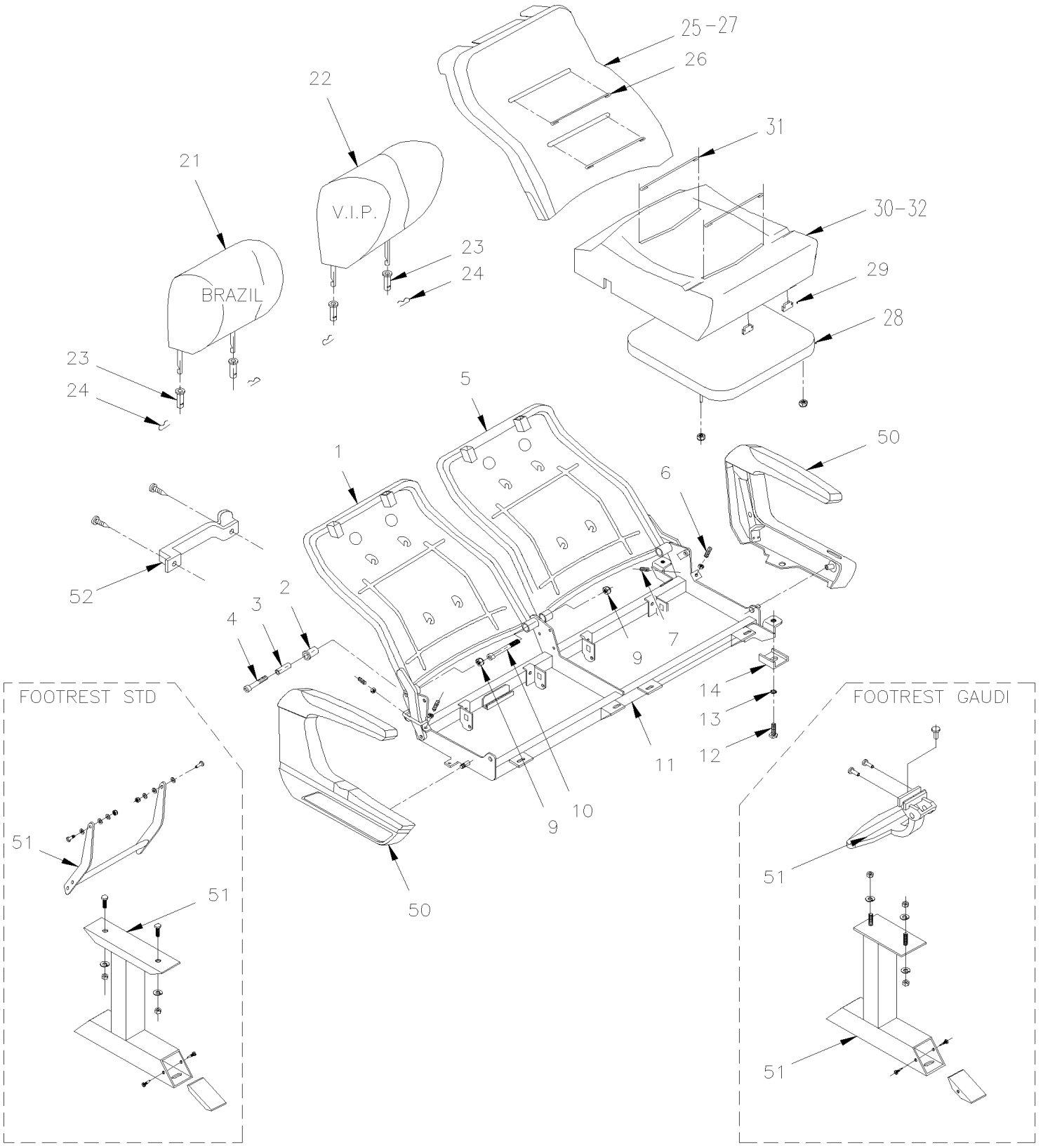

		Date:07/2024	PAGE:Y2-1826-05
PASSENGER'S SEAT - "AMAYA" "EUROTECH"			

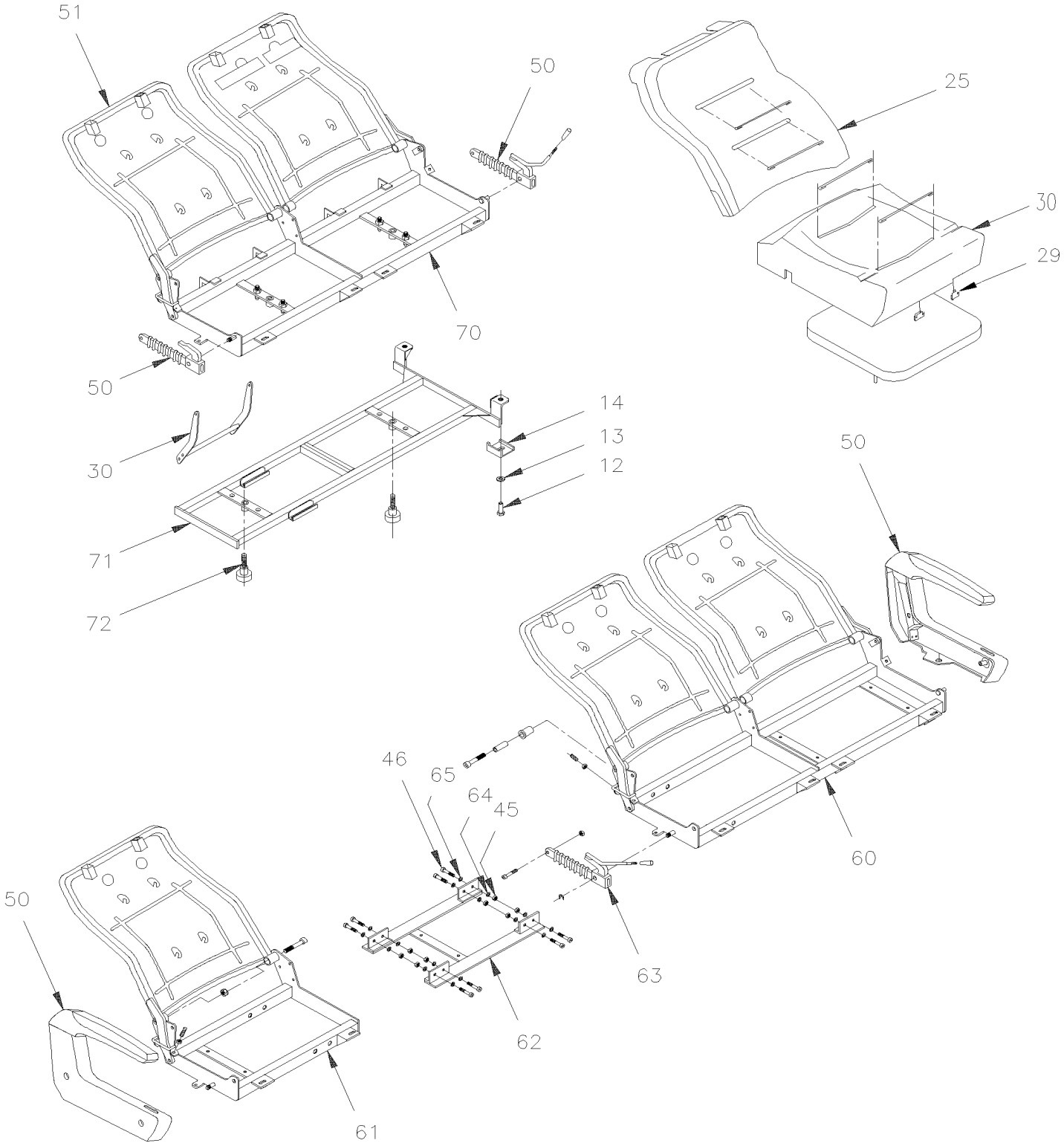

		Date:07/2024	PAGE:Y2-1826-05

PASSENGER'S SEAT - "AMAYA" "EUROTECH"

Item#	Part	Description	XLII 45	XLII MTH40	XLII MTH45	XLII MTH45E	NOTES
		. . . . IMPORTANT NOTE:					
		. . . . TO ORDER COMPLETE PASSENGER'S SEAT KIT #,					
		. . . . SEE THE FINAL VEHICLE RECORD.					
1	193017	BACKREST STRUCTURE R.H.	1				
1	Call order desk	BACKREST STRUCTURE R.H. / W/IND "REI"	1				P
1	Call order desk	BACKREST STRUCTURE R.H. "EUROTECH"	1				P
2	865560	BUSHING HYTREL	1				
3	Call order desk	INSIDE METAL BUSHING	1				P
4	70314705	SCREW CAP HEXS M10-1.5x60 G8.8 ZP	1				
5	Call order desk	BACKREST STRUCTURE L.H.	1				P
5	Call order desk	BACKREST STRUCTURE L.H. / W/IND "REI"	1				P
5	Call order desk	BACKREST STRUCTURE L.H. "EUROTECH"	1				P
6	Call order desk	LOCK BOLT M6-1x30	1				P
7	Call order desk	LOCK BOLT M6-1x20	1				P
9	500680	NUT HEX STO M10-1.5 Z050	1				
10	502765	SCREW CAP HEXS M10-1.5x100 G8.8 PT ZP	1				
11	Call order desk	STRUCTURE R.H. / W/STD FOOTREST	1				P
11	Call order desk	STRUCTURE R.H. / W/STD FOOTREST	1				P
11	Call order desk	STRUCTURE L.H. / W/STD FOOTREST	1				P
11	Call order desk	STRUCTURE L.H. / W/STD FOOTREST	1				P
11	Call order desk	STRUCTURE R.H. / W/GAUDI FOOTREST	1				P
11	Call order desk	STRUCTURE L.H. / W/GAUDI FOOTREST	1				P
11	Call order desk	STRUCTURE R.H. / W/GAUDI FOOTREST & AVION TABLE SEAT	1				P
11	Call order desk	STRUCTURE L.H. / W/GAUDI FOOTREST & AVION TABLE SEAT	1				P
11	Call order desk	STRUCTURE L.H. & R.H. / W/STD FOOTREST "EUROTECH"	1				P
12	500183	SCREW CAP HEX 5/16-18x1 1/2 G5 PT Z050	1				
13	500441	WASHER FL .312x.734x.065 Z050	1				
14	863541	BRACKET SUPPORT	1				
21	862558	HEADREST FOAM / TYPE "BRAZIL"	1				
21	Call order desk	COVERING ASSY S.C.C.	1				P
21	863315	HEADREST FOAM / TYPE "BRAZIL" & "EUROTECH"	1				
22	862933	HEADREST ASSY / TYPE WINGED "VIP"	1				
22	866011	HEADREST FOAM / TYPE WINGED "VIP"	1				
22	Call order desk	COVERING ASSY WING TYPE / S.C.C.	1				P
23	864810	GUIDE SLIDING	1				
23	Call order desk	GUIDE SLIDING	1				P
24	866204	BACKREST CLIP	1				
25	Call order desk	BACKREST FOAM	1				P
26	Call order desk	BACKREST TUFTING WIRE / LARGE / W/"GAUDI" & "EUROTECH"	1				P
26	Call order desk	BACKREST TUFTING WIRE "EUROTECH" & "BRASIL	1				P
27	Call order desk	COVERING BACKREST ASSY S.C.C. "EUROTECH" To YEAR 1999	1				P

		Date:07/2024	PAGE:Y2-1826-05

PASSENGER'S SEAT - "AMAYA" "EUROTECH"

Item#	Part	Description	XLII 45	XLII MTH40	XLII MTH45	XLII MTH45E	NOTES
27	Call order desk	COVERING BACKREST ASSY S.C.C. From YEAR 2000	1				P
28	Call order desk	CUSHION FRAME W/CLOTH	1				P
28	Call order desk	. CUSHION FRAME	1				P
28	Call order desk	. CUSHION CLOTH	1				P
29	864187	FASTENER COVERING	1				
30	865141	CUSHION FOAM	1				
31	Call order desk	CUSHION TUFTING WIRE "EUROTECH" To YEAR 1999	1				P
31	Call order desk	CUSHION TUFTING WIRE "EUROTECH" & "BRASIL From YEAR 2000	1				P
32	Call order desk	COVERING CUSHION ASSY S.C.C.	1				P
33	502716	NUT HEX NYRT 1/4-20	1				
49	362627	PLATE ANCHOR / 3/8-16 BOLT INSIDE TRACK / 1 1/4" X 1 1/4"	1				
50	**Y2-1826-50**	**ARMREST PASSENGER'S SEAT - "AMAYA" WITH "EUROTECH"**					
50	**Y2-1826-51**	**ARMREST PASSENGER'S SEAT - "AMAYA" WITH "BRASIL"**					
51	**Y2-1826-40**	**PASSENGER'S SEAT - "AMAYA" - FOOTREST & PEDESTAL**					
52	**Y2-1826-60**	**ACCESSORIES PASSENGER'S SEAT - "AMAYA"**					
60	Call order desk	STRUCTURE DOUBLE / USED W/3 LOUNGE SEAT	1				P
61	Call order desk	STRUCTURE SINGLE / USED W/3 LOUNGE SEAT	1				P
62	Call order desk	STRUCTURE UNION SEAT / USED W/3 LOUNGE SEAT	1				P
63	866004	CENTER MECHANISM	1				
64	500446	WASHER FL .531x1.250x.125 Z050	1				
65	Call order desk	FLAT WASHER	1				P
66	866243	PRESSURE WASHER 7/16" 10MM	1				
70	Call order desk	STRUCTURE FRAME ROTATING SEAT	1				P
71	Call order desk	STRUCTURE FRAME INFERIOR R.H. / W/STD FOOTREST	1				P
71	Call order desk	STRUCTURE FRAME INFERIOR L.H. / W/STD FOOTREST	1				P
71	Call order desk	STRUCTURE FRAME INFERIOR R.H. / W/GAUDI FOOTREST	1				P
71	Call order desk	STRUCTURE FRAME INFERIOR L.H. / W/GAUDI FOOTREST	1				P
72	862156	KNOB / ROTATING SEAT	2				
100	323654	SEAT TRACK COVER 12' / EACH SEAT / W/COVERING FLOOR	AR				
100	323963	SEAT TRACK COVER 8' / EACH SEAT / W/COVERING FLOOR	AR				
		P) CALL ORDER DESK FOR SPECIFIC APPLICATION (V.I.N.)					

		Date:07/2024	PAGE:Y2-1826-06
PASSENGER'S SEAT - "AMAYA" "BRASIL"			

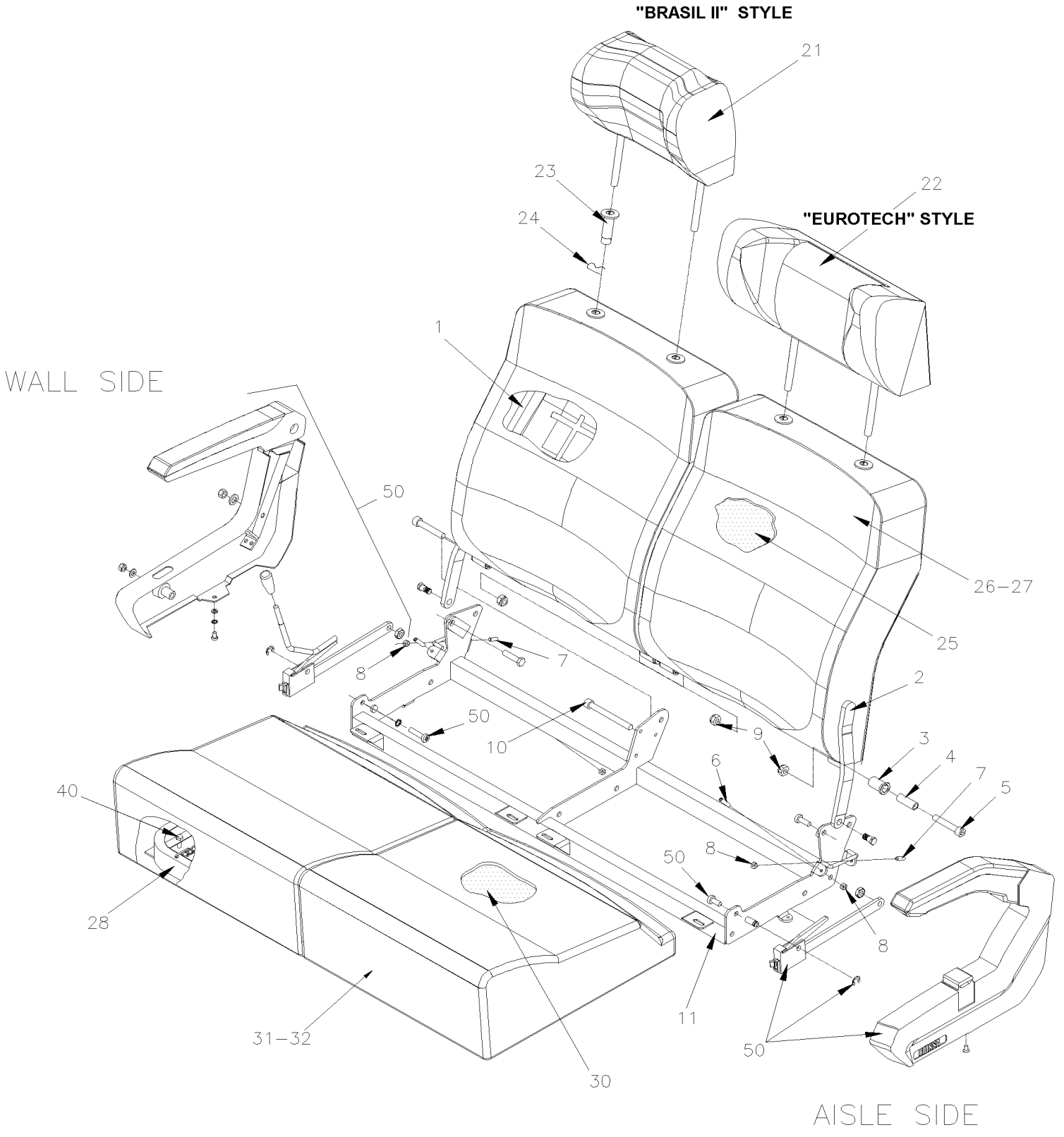

		Date:07/2024	PAGE:Y2-1826-06

PASSENGER'S SEAT - "AMAYA" "BRASIL"

Item#	Part	Description	XLII 45	XLII MTH40	XLII MTH45	XLII MTH45E	NOTES
		IMPORTANT NOTE:					
		TO ORDER COMPLETE PASSENGER'S SEAT KIT #,					
		SEE THE FINAL VEHICLE RECORD.					
1	868532	BACKREST ASSY R.H.	1				
1	865680	. BACKREST STRUCTURE R.H.	1				
2	864073	BACKREST ASSY L.H.	1				
2	865681	. BACKREST STRUCTURE L.H.	1				
3	Call order desk	INSIDE METAL BUSHING	1				P
4	865560	BUSHING HYTREL	1				
5	70314705	SCREW CAP HEXS M10-1.5x60 G8.8 ZP	2				
6	Call order desk	LOCK BOLT M6-1x30	1				P
7	Call order desk	LOCK BOLT M6-1x20	1				P
8	500609	NUT HEX M6-1.0 Z050	4				
9	500680	NUT HEX STO M10-1.5 Z050	1				
10	502765	SCREW CAP HEXS M10-1.5x100 G8.8 PT ZP	1				
11	Call order desk	STRUCTURE R.H.	1				P
11	Call order desk	STRUCTURE L.H.	1				P
21	Call order desk	HEADREST FOAM / TYPE "BRAZIL-II"	1				P
NS	Call order desk	COVERING HEADREST ASSY "BRAZIL-II" S.C.C.	1				P
22	863315	HEADREST FOAM / TYPE "BRAZIL" & "EUROTECH"	1				
NS	Call order desk	COVERING HEADREST ASSY "BRAZIL" & EURO S.C.C.	1				P
23	864810	GUIDE SLIDING	4				
24	866204	BACKREST CLIP	4				
25	Call order desk	BACKREST FOAM	2				P
26	867775	BACKREST TUFTING WIRE	4				
27	Call order desk	COVERING BACKREST ASSY S.C.C.	2				P
28	8611003	SEAT FRAME	2				
30	860039	CUSHION FOAM	2				
31	861716	CUSHION TUFTING WIRE	4				
32	Call order desk	COVERING CUSHION ASSY S.C.C.	2				P
40	502716	NUT HEX NYRT 1/4-20	4				
50	**Y2-1826-51**	**ARMREST PASSENGER'S SEAT - "AMAYA" WITH "BRASIL"**					
51	**Y2-1826-60**	**ACCESSORIES PASSENGER'S SEAT - "AMAYA"**					
52	864119	KNOB / ROTATING SEAT	1				B
		B) USE WITH SWIVEL SEAT					
		P) CALL ORDER DESK FOR SPECIFIC APPLICATION (V.I.N.)					

		Date:07/2024	PAGE:Y2-1826-07
PASSENGER'S SEAT - "AMAYA" "SIGLIUM" TORO & TORINO			

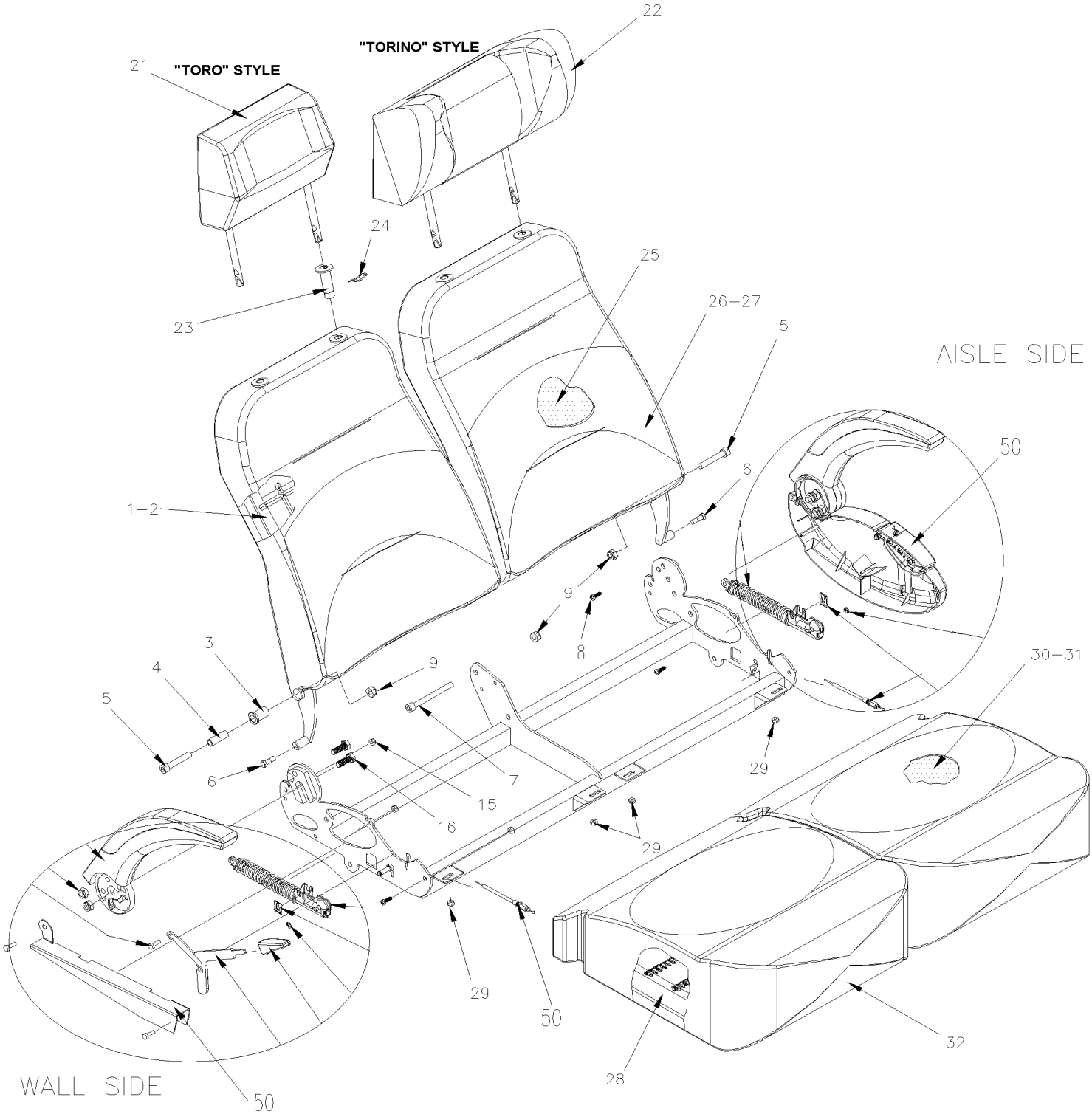

		Date:07/2024	PAGE:Y2-1826-07

PASSENGER'S SEAT - "AMAYA" "SIGLIUM" TORO & TORINO

Item#	Part	Description	XLII 45	XLII MTH40	XLII MTH45	XLII MTH45E	NOTES
		IMPORTANT NOTE:					
		TO ORDER COMPLETE PASSENGER'S SEAT KIT #,					
		SEE THE FINAL VEHICLE RECORD.					
1	Call order desk	BACKREST ASSY R.H. / WSIGLUM TORO	1				P
1	868500	. BACKREST STRUCTURE R.H. / WSIGLUM TORO	1				
1	Call order desk	BACKREST ASSY R.H. / WSIGLUM TORINO	1				P
1	Call order desk	. BACKREST STRUCTURE R.H. / WSIGLUM TORINO	1				P
2	Call order desk	BACKREST ASSY L.H. / WSIGLUM TORO	1				P
2	Call order desk	. BACKREST STRUCTURE L.H. / W/SIGLUM TORO	1				P
2	Call order desk	BACKREST ASSY L.H. / WSIGLUM TORINO	1				P
2	Call order desk	. BACKREST STRUCTURE L.H. / W/SIGLUM TORINO	1				P
3	Call order desk	. . INSIDE METAL BUSHING	1				P
4	865560	. . BUSHING HYTREL	1				
5	70314705	SCREW CAP HEXS M10-1.5x60 G8.8 ZP	2				
6	5001132	SCREW CAP HEX 5/16-18x7/8 G5 Z050	2				
7	502765	SCREW CAP HEXS M10-1.5x100 G8.8 PT ZP	1				
8	Call order desk	HY-LO BOLT M6-1.0x23	2				P
9	5001570	NUT HEX NYRT M10-1.5 Z050	5				
10	11500930	SCREW CAP HEX M10-1.5x30 G8.8 PHC	2				
11	500163	SCREW CAP HEX 1/4-20x3/4 G5 Z050	3				
12	500183	SCREW CAP HEX 5/16-18x1 1/2 G5 PT Z050	1				
13	500441	WASHER FL .312x.734x.065 Z050	1				
14	9415477	SCREW CAP HEX 1/4-20x3/4 ZP	1				
15	500769	NUT HEX 1/4-20 Z050	3				
16	11500930	SCREW CAP HEX M10-1.5x30 G8.8 PHC	2				
20	Call order desk	STRUCTURE R.H.	1				P
20	Call order desk	STRUCTURE L.H.	1				P
21	Call order desk	HEADREST FOAM / TYPE "TORO"	1				P
NS	Call order desk	COVERING HEADREST ASSY "TORO" S.C.C.	1				P
22	864858	HEADREST FOAM / TYPE "TORINO"	1				
NS	864861	COVERING HEADREST ASSY "TORINO" S.C.C.	1				
23	864810	GUIDE SLIDING	2				
24	866204	BACKREST CLIP	2				
25	Call order desk	BACKREST FOAM / W/SIGLUM TORO S.C.C.	2				P
25	867774	BACKREST FOAM / W/SIGLUM TORINO S.C.C.	2				
26	867775	BACKREST TUFTING WIRE	4				
27	Call order desk	COVERING BACKREST ASSY "TORO" S.C.C.	2				P
27	Call order desk	COVERING BACKREST ASSY "TORINO" S.C.C.	2				P
28	860108	SEAT CUSHION FRAME	2				
29	502716	NUT HEX NYRT 1/4-20	4				
30	865360	CUSHION FOAM	2				

		Date:07/2024	PAGE:Y2-1826-07

PASSENGER'S SEAT - "AMAYA" "SIGLIUM" TORO & TORINO

Item#	Part	Description	XLII 45	XLII MTH40	XLII MTH45	XLII MTH45E	NOTES
31	861716	CUSHION TUFTING WIRE	2				
32	Call order desk	COVERING CUSHION ASSY S.C.C.	2				P
50	**Y2-1826-53**	**ARMREST PASSENGER'S SEAT - "AMAYA" WITH "SIGLIUM" TORO & TORINO**					
NS	864072	ARMREST CENTRAL ASSY / LIGHT GREY					
. NS	865995	. BOLT	1				
. NS	865996	. BUSHING	1				
. NS	866240	. ARMREST COVERING LIGHT GREY	1				
		P) CALL ORDER DESK FOR SPECIFIC APPLICATION (V.I.N.)					

		Date:07/2024	PAGE:Y2-1826-08
PASSENGER'S SEAT - "AMAYA" "GAUDI"			

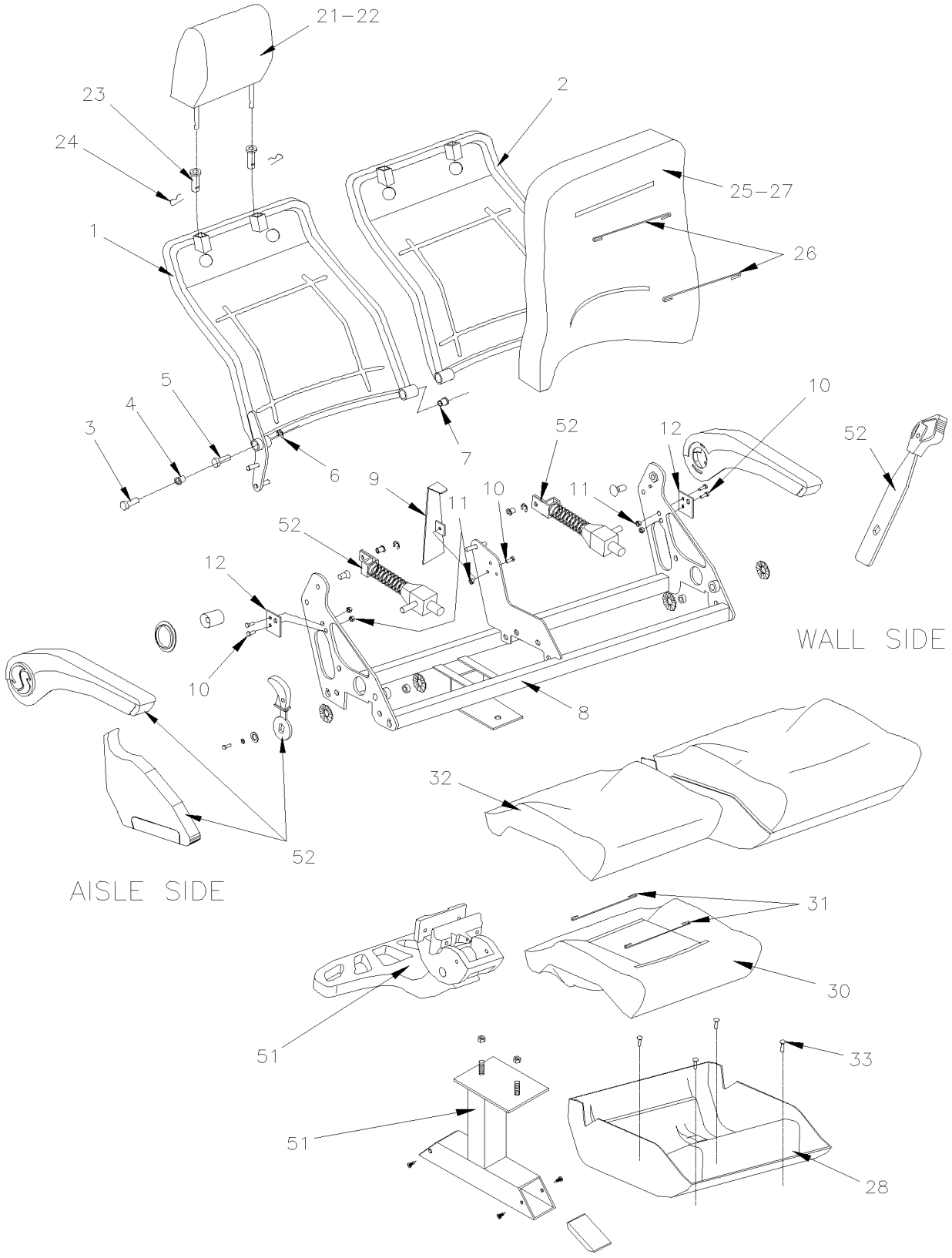

		Date:07/2024	PAGE:Y2-1826-08
PASSENGER'S SEAT - "AMAYA" "GAUDI"			

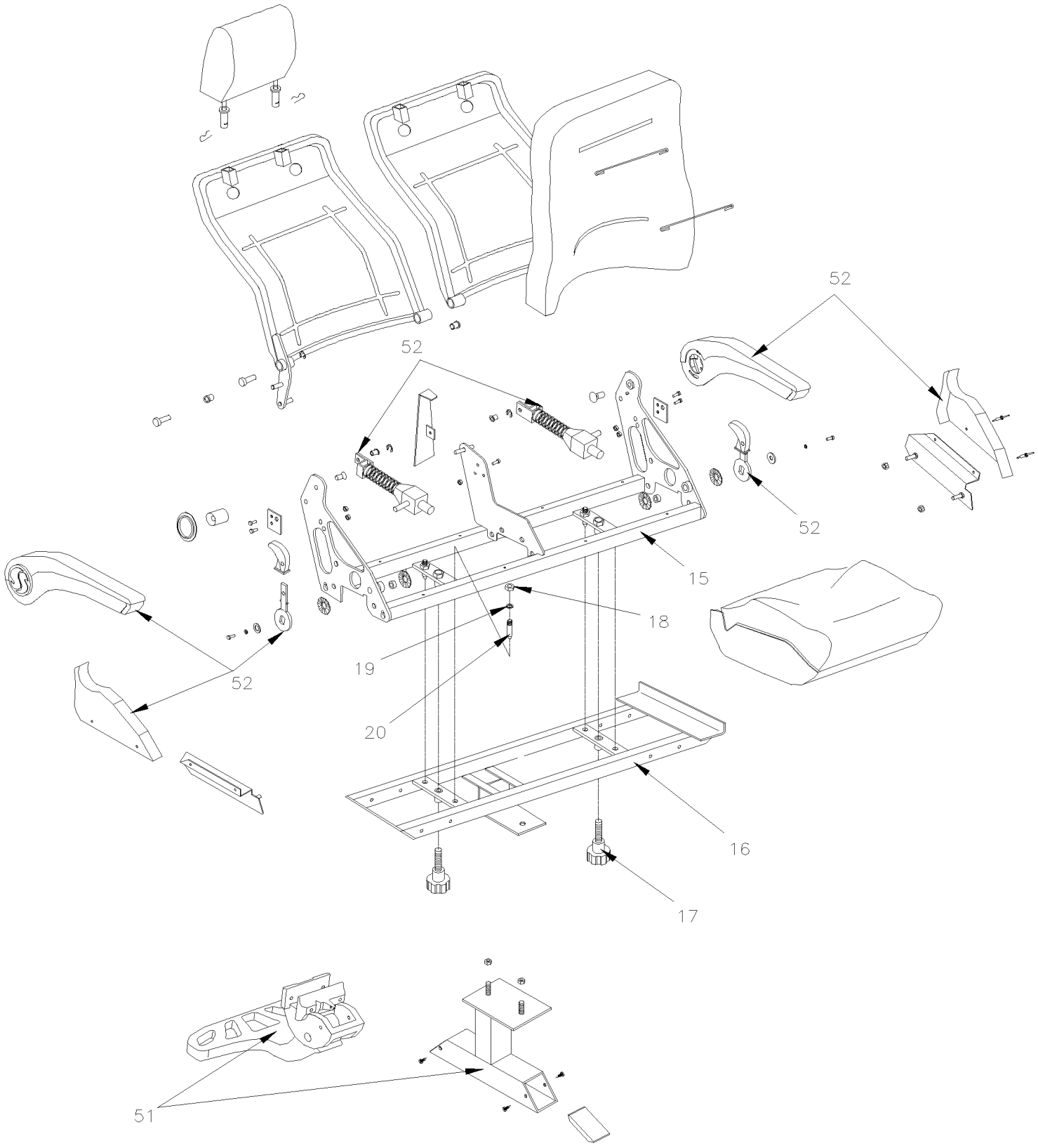

		Date:07/2024	PAGE:Y2-1826-08

PASSENGER'S SEAT - "AMAYA" "GAUDI"

Item#	Part	Description	XLII 45	XLII MTH40	XLII MTH45	XLII MTH45E	NOTES
		IMPORTANT NOTE: BEFORE TO					
		ORDER COMPLETE PASSENGER'S SEAT					
		OR COVERING ASSY, HEAD / BACK & CUSHION					
		SEE THE FINAL VEHICLE RECORD					
1	Call order desk	BACKREST R.H.	1				P
2	Call order desk	BACKREST L.H.	1				P
3	865560	. BUSHING HYTREL	1				
4	Call order desk	. INSIDE METAL BUSHING	1				P
5	864975	BOLT M10X25MM	2				
6	Call order desk	WASHER #9 DIN6799	2				P
7	Call order desk	BUSHING CENTER SEPARATOR	2				P
8	Call order desk	STRUCTURE L.H. / W/"GAUDI" HR	1				P
8	Call order desk	STRUCTURE R.H. / W/"GAUDI" HR	1				P
8	Call order desk	STRUCTURE L.H. / W/"GAUDI" SC	1				P
9	Call order desk	BACK COVER / W/"GAUDI" HR	1				P
9	Call order desk	BACK COVER / W/"GAUDI" SC	1				P
10	9415477	SCREW CAP HEX 1/4-20x3/4 ZP	6				
11	500769	NUT HEX 1/4-20 Z050	6				
12	Call order desk	STOPPER RECLINING 3"	2				P
15	Call order desk	STRUCTURE UPPER / REVERSIBLE SEAT / W/"GAUDI" HR	1				P
15	Call order desk	STRUCTURE UPPER / REVERSIBLE SEAT / W/"GAUDI" SC	1				P
16	Call order desk	STRUCTURE LOWER / REVERSIBLE SEAT	1				P
17	862156	KNOB / ROTATING SEAT	2				
18	5001570	NUT HEX NYRT M10-1.5 Z050	6				
19	866243	PRESSURE WASHER 7/16" 10MM	6				
20	Call order desk	GUIDE BOLT	6				P
21	Call order desk	HEADREST FOAM / TYPE "GAUDI HR"	1				P
22	Call order desk	COVERING HEADREST ASSY "GAUDI" S.C.C.	1				P
23	864810	GUIDE SLIDING	2				
24	866204	BACKREST CLIP	2				
25	Call order desk	BACKREST FOAM / W/"GAUDI"	1				P
26	Call order desk	BACKREST TUFTING WIRE / LARGE / W/"GAUDI" & "EUROTECH"	1				P
26	Call order desk	BACKREST TUFTING WIRE / SMALL / W/"GAUDI"	1				P
27	Call order desk	COVERING BACKREST ASSY / S.C.C. / W/"GAUDI"	1				P
28	Call order desk	SEAT SHELL / W/"GAUDI" HR	1				P
28	Call order desk	CUSHION FRAME / W/"GAUDI" SC	1				P
30	Call order desk	CUSHION FOAM	1				P
31	Call order desk	CUSHION TUFTING WIRE	2				P
32	Call order desk	COVERING CUSHION ASSY S.C.C.	1				P
33	Call order desk	BOLT 6.3x19	4				P

		Date:07/2024	PAGE:Y2-1826-08

PASSENGER'S SEAT - "AMAYA" "GAUDI"

Item#	Part	Description	XLII 45	XLII MTH40	XLII MTH45	XLII MTH45E	NOTES
34	Call order desk	SEAT FIXING BRACKET	1				P
35	Call order desk	BOLT 3.9X13MM	1				P
50	**Y2-1826-60**	**ACCESSORIES PASSENGER'S SEAT - "AMAYA"**					
51	**Y2-1826-40**	**PASSENGER'S SEAT - "AMAYA" - FOOTREST & PEDESTAL**					
52	**Y2-1826-52**	**ARMREST PASSENGER'S SEAT - "AMAYA" WITH "GAUDI"**					
		P) CALL ORDER DESK FOR SPECIFIC APPLICATION (V.I.N.)					

		Date:07/2024	PAGE:Y2-1826-40
PASSENGER'S SEAT - "AMAYA" - FOOTREST & PEDESTAL			

FOOTREST GAUDI

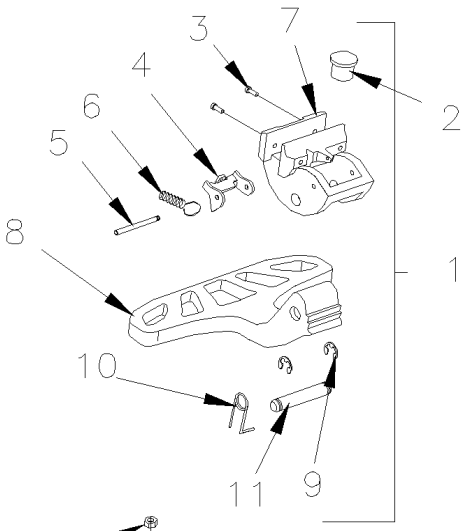

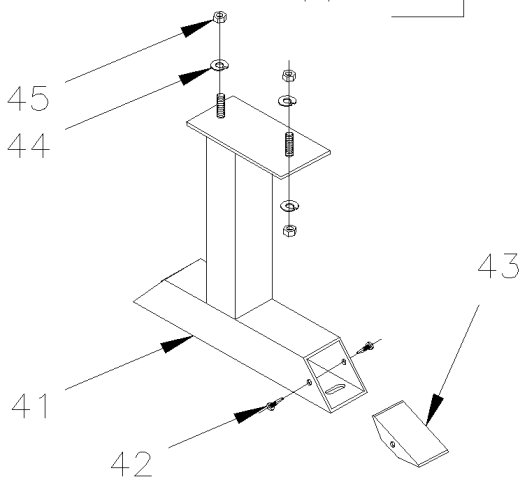

FOOTREST STD

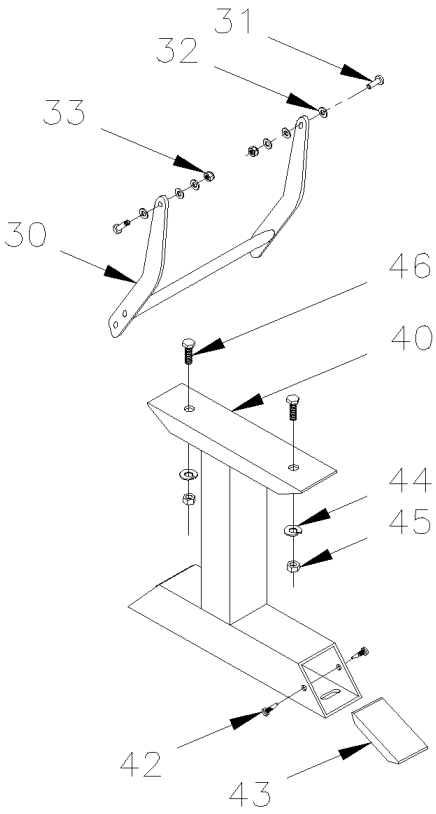

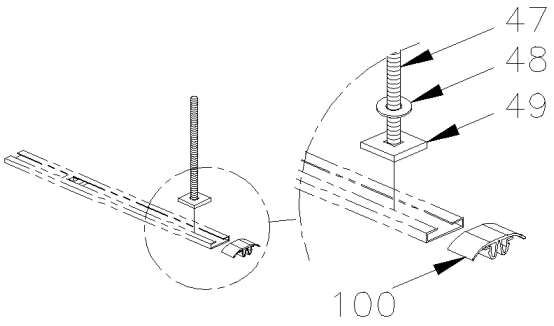

		Date:07/2024	PAGE:Y2-1826-40

PASSENGER'S SEAT - "AMAYA" - FOOTREST & PEDESTAL

Item#	Part	Description	XLII 45	XLII MTH40	XLII MTH45	XLII MTH45E	NOTES
1	862224	FOOTREST ASSY W/SPRING / "GAUDI" / ALUMINUM	1				
1	867725	FOOTREST ASSY W/AUTOMATIC RETURN / "STELAM" / PLASTIC	1				
1	862714	FOOTREST ASSY W/SPRING / "SIGLIUM" / PLASTIC	1				B
2	N.S.S.	. RUBBER BUMPER	1				1
3	N.S.S.	. SCREW CAP HEXS M8-1.25x50 SS	2				1
4	N.S.S.	. STOPPER	1				1
5	N.S.S.	. STOPPER AXLE	1				1
6	N.S.S.	. SPRING	1				1
7	N.S.S.	. FOOTREST SUPPORT	1				1
8	N.S.S.	. FOOTREST	1				1
9	N.S.S.	. RETAINING RING	2				1
10	N.S.S.	. SPRING	1				1
11	N.S.S.	. FOOTREST AXLE	1				1
30	863814	FOOTREST STANDARD 10" L x 9" U	1				
31	Call order desk	BOLT SPECIAL M8-1.25 x10	2				P
32	500441	WASHER FL .312x.734x.065 Z050	2				
33	500868	NUT HEX NYRT M8-1.25 Z050	2				
40	860116	PEDESTAL ASSY / W STD FOOTREST	1				
40	866199	PEDESTAL ASSY / W STD FOOTREST W/TORINO	1				
41	Call order desk	PEDESTAL ASSY / W GAUDI FOOTREST	1				P
41	Call order desk	PEDESTAL ASSY / W GAUDI FOOTREST	1				P
41	Call order desk	PEDESTAL ASSY / W GAUDI FOOTREST / W/REVERSIBLE "GAUDI" HR	1				P
41	Call order desk	PEDESTAL ASSY / W GAUDI FOOTREST / W/REVERSIBLE "GAUDI" SC	1				P
41	Call order desk	PEDESTAL ASSY / W GAUDI FLIP-UP SLIDE	1				P
42	504619	. CLIP CHRISTMAS TREE / BLACK 7/32"O.D.x1/2" HOLE 3/16	2				
43	862585	PEDESTAL CAP / BLACK	2				
. NS	864028	. CLIP CHRISTMAS TREE / BLACK 11MM O.D. x17MM HOLE 4MM	2				
43	863907	PEDESTAL CAP / GREY	2				
. NS	864029	. CLIP CHRISTMAS TREE / GREY 11MM O.D. x17MM HOLE 4MM	2				
44	866243	PRESSURE WASHER 7/16" 10MM	1				
45	500256	NUT HEX M10-1.5 Z050	2				
46	5001526	SCREW CAP HEX M16-2.0x45 G10.9 DP	2				
47	500305	SCREW CAP HEX 3/8-16x7/8 G5 Z050	2				
48	500478	WASHER LO SPT .380x.683x.094 Z050	2				
49	362627	PLATE ANCHOR / 3/8-16 BOLT INSIDE TRACK / 1 1/4" X 1 1/4"	AR				
100	323654	SEAT TRACK COVER 12' / EACH SEAT / W/COVERING FLOOR	AR				
100	323963	SEAT TRACK COVER 8' / EACH SEAT / W/COVERING FLOOR	AR				
		B) THIS MODEL HAVE FOOTREST SUPPORT DIFFER THAN PICTURE					
		1) NOT SOLD SEPARATELY					

		Date:07/2024	PAGE:Y2-1826-40

PASSENGER'S SEAT - "AMAYA" - FOOTREST & PEDESTAL

Item#	Part	Description	XLII 45	XLII MTH40	XLII MTH45	XLII MTH45E	NOTES
		P) CALL ORDER DESK FOR SPECIFIC APPLICATION (V.I.N.)					

		Date:07/2024	PAGE:Y2-1826-50
ARMREST PASSENGER'S SEAT - "AMAYA" WITH "EUROTECH"			

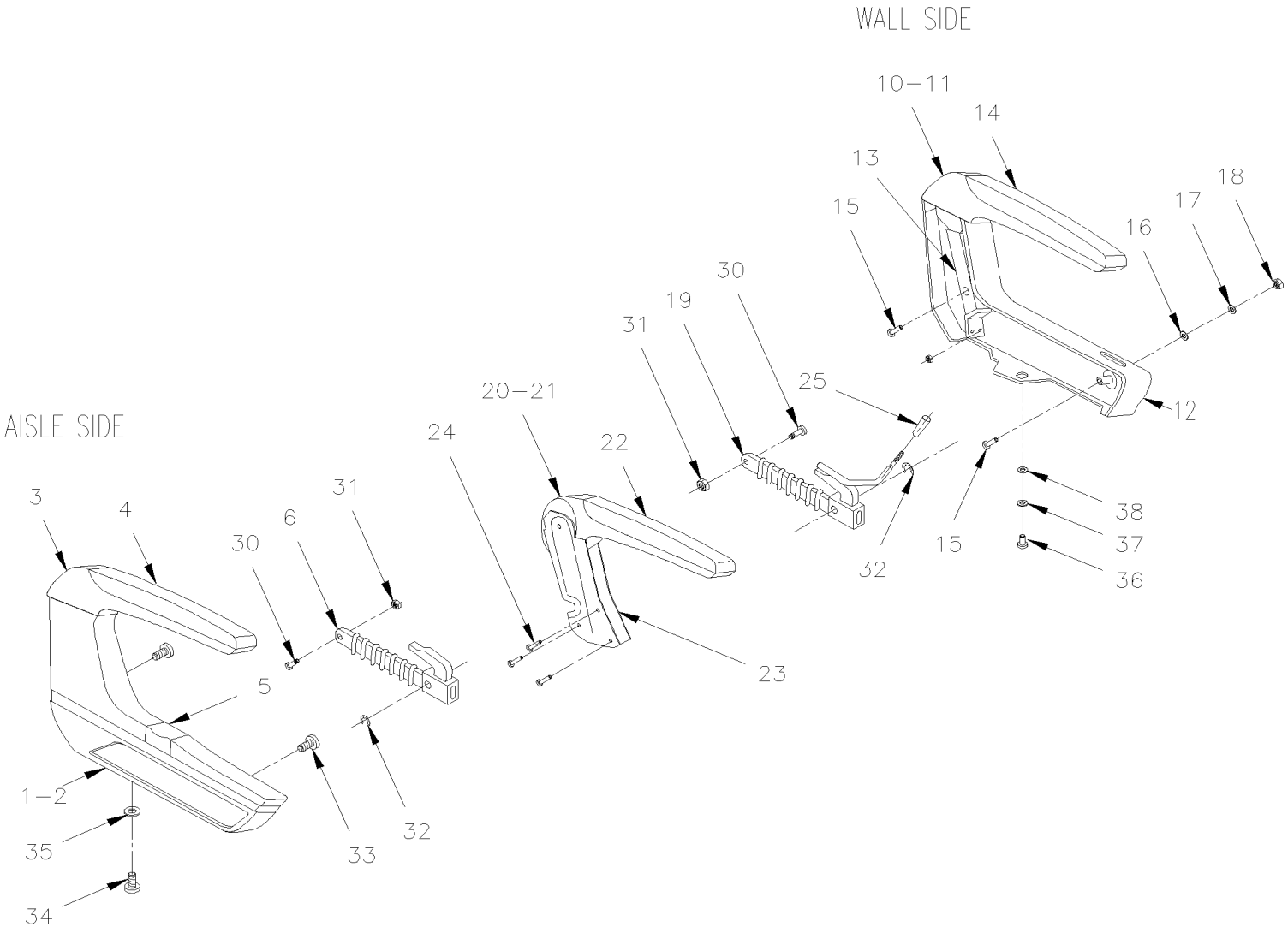

		Date:07/2024	PAGE:Y2-1826-50

ARMREST PASSENGER'S SEAT - "AMAYA" WITH "EUROTECH"

Item#	Part	Description	XLII 45	XLII MTH40	XLII MTH45	XLII MTH45E	NOTES
1	865740	ARMREST ASSY R.H.	1				
1	865741	ARMREST ASSY L.H.	1				
2	Call order desk	. ARMREST AISLE SUPPORT L.H.	1				P
2	867850	. ARMREST AISLE SUPPORT R.H.	1				
3	864847	. ARMREST AISLE FRAME L.H.	1				
3	864848	. ARMREST AISLE FRAME R.H.	1				
NS	865534	. AXLE BOLT (ARM PIVOT)	1				
NS	865533	. WASHER CON	1				
4	862939	. ARMREST COVER RUBBER	1				
NS	Call order desk	. BOLT 2.5X26	1				P
5	863361	. PUSH BUTTON	1				
5	863474	. TRACK BUTTON	1				
NS	863475	. SPRING BUTTON	1				
NS	863476	. STOPPER BUTTON	1				
6	862545	. RECLINING MECANISM AILSE SIDE	1				A
10	863645	ARMREST ASSY L.H. / WALL SIDE	1				
10	Call order desk	ARMREST ASSY R.H. / WALL SIDE	1				P
11	866006	. ARMREST WALL FRAME R.H.	1				
11	863381	. ARMREST WALL FRAME L.H.	1				
NS	Call order desk	. WASHER	1				P
NS	866005	. SCREW CAP HEXS M12x30	1				
12	862937	. ARMREST WALL SUPPORT R.H.	1				
12	867851	. ARMREST WALL SUPPORT L.H.	1				
13	863425	. ARMREST REINFORCEMENT	1				
14	862939	. ARMREST COVER RUBBER	1				
NS	Call order desk	. BOLT 2.5X26	1				P
15	Call order desk	. BOLT M8 X 50MM	1				P
15	Call order desk	. SCREW MA CHE PH M8-1.25x45	1				P
16	Call order desk	. WASHER FL 8.4	1				P
17	Call order desk	. WASHER LO INT 8.4	1				P
18	865483	. NUT HEX M8-1.25	1				
19	862218	RECLINING MECANISM WALL SIDE	1				B
20	862544	CENTER ARMREST ASSY / PAINTED ALUMINUM	1				
21	865357	. ARMREST CENTER	1				
NS	865533	. WASHER CON	2				
NS	860170	. BOLT MALE	1				
NS	Call order desk	. BOLT FEMALE	1				P
22	862939	. ARMREST COVER RUBBER	1				
23	Call order desk	. ARMREST CENTER SUPPORT	1				P
24	Call order desk	. SCREW MA CHE PH M6x15	1				P
25	862225	. KNOB W/ ROUND ROD INSERT MECHANISM (FORMER)	1				
25	864117	. KNOB W/SQUARE ROD INSERT MECHANISM (CURRENT)	1				

		Date:07/2024	PAGE:Y2-1826-50

ARMREST PASSENGER'S SEAT - "AMAYA" WITH "EUROTECH"

Item#	Part	Description	XLII 45	XLII MTH40	XLII MTH45	XLII MTH45E	NOTES
30	866248	BOLT SPECIAL FIXING	1				
31	500256	NUT HEX M10-1.5 Z050	1				
32	Call order desk	WASHER #9 DIN6799	1				P
33	Call order desk	SCREW OVAL HEAD M8-1.25x20	1				P
34	Call order desk	SCREW CAP HEXS M8x20	1				P
35	865515	WASHER FL 6.4	1				
36	Call order desk	SCREW BUT HEXS M6x10	1				P
37	Call order desk	PRESSURE WASHER	1				P
38	Call order desk	WASHER J6.4 DIN 125	1				P
		A) INCLUDE ITEMS # 30,31 & 32					
		B) INCLUDE ITEMS # 25, 30, 31 & 32					
		P) CALL ORDER DESK FOR SPECIFIC APPLICATION (V.I.N.)					

		Date:07/2024	PAGE:Y2-1826-51
ARMREST PASSENGER'S SEAT - "AMAYA" WITH "BRASIL"			

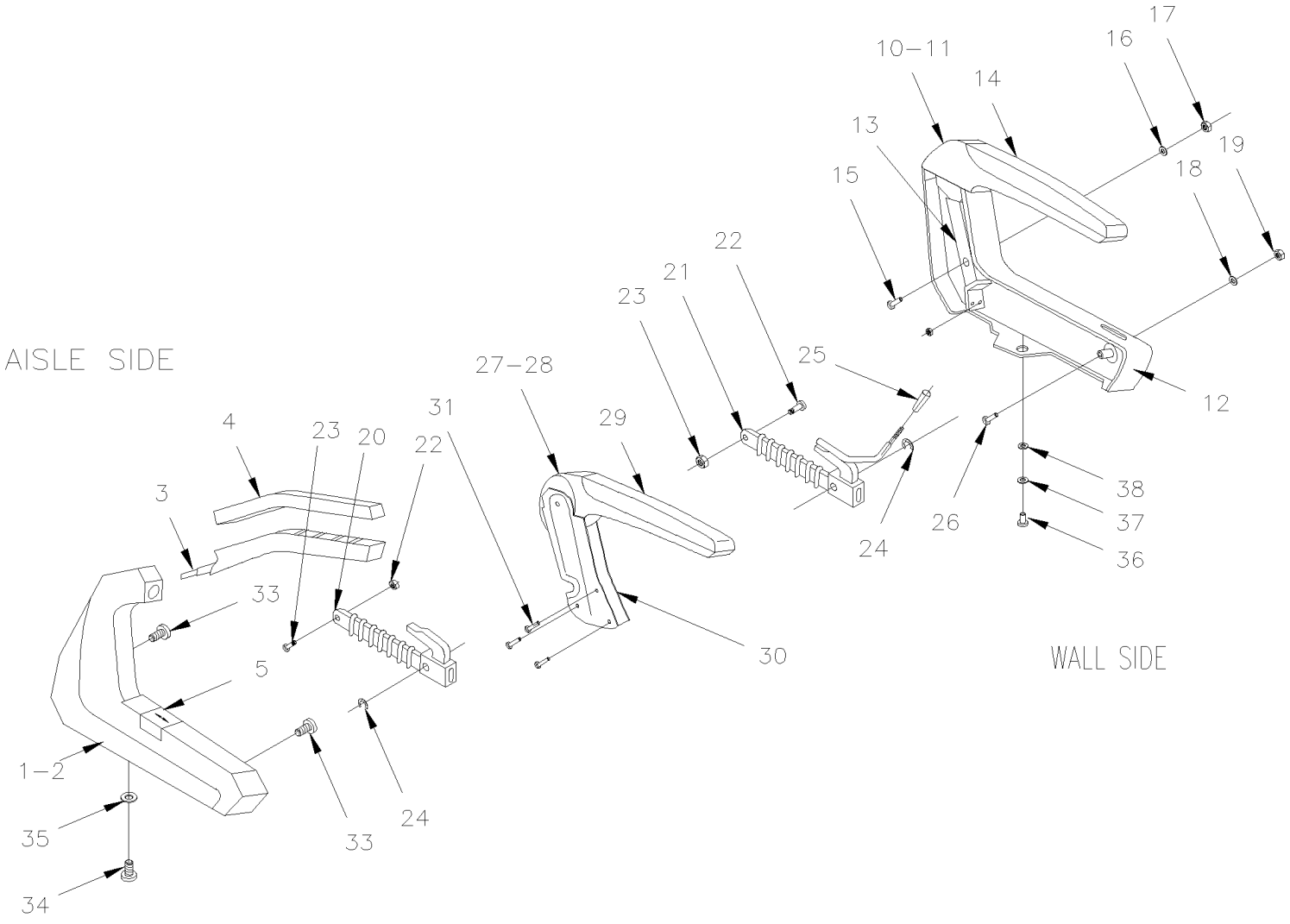

		Date:07/2024	PAGE:Y2-1826-51

ARMREST PASSENGER'S SEAT - "AMAYA" WITH "BRASIL"

Item#	Part	Description	XLII 45	XLII MTH40	XLII MTH45	XLII MTH45E	NOTES
1	863843	ARMREST ASSY R.H.	1				
1	863844	ARMREST ASSY L.H.	1				
1	862934	ARMREST ASSY L.H.	1				
2	867849	. ARMREST AISLE SUPPORT L.H.	1				
2	Call order desk	. ARMREST AISLE SUPPORT R.H.	1				P
3	860128	. ARMREST AISLE FRAME L.H.	1				
3	Call order desk	. ARMREST AISLE FRAME R.H.	1				P
NS	Call order desk	. ARMREST CLIP	1				P
NS	Call order desk	. FIBER ARMREST WASHER	1				P
4	863427	. ARMREST COVER AISLE	1				
5	863361	. PUSH BUTTON	1				
5	863474	. TRACK BUTTON	1				
NS	863475	. SPRING BUTTON	1				
NS	863476	. STOPPER BUTTON	1				
10	863645	ARMREST ASSY L.H. / WALL SIDE	1				
10	Call order desk	ARMREST ASSY R.H. / WALL SIDE	1				P
11	866006	. ARMREST WALL FRAME R.H.	1				
11	863381	. ARMREST WALL FRAME L.H.	1				
NS	Call order desk	. WASHER	1				P
NS	866005	. SCREW CAP HEXS M12x30	1				
12	862937	. ARMREST WALL SUPPORT R.H.	1				
12	867851	. ARMREST WALL SUPPORT L.H.	1				
13	863425	. ARMREST REINFORCEMENT	1				
14	862939	. ARMREST COVER RUBBER	1				
NS	Call order desk	. BOLT 2.5X26	1				P
15	500193	SCREW CAP HEX 3/8-16x1 1/2 G5 Z050	1				
16	500445	WASHER FL .437x1.000x.083 Z050	1				
17	500783	NUT HEX 3/8-16 Z050	1				
18	502507	WASHER LO SPT 8.1x14.8x2.0 Z050	1				
19	502543	NUT HEX M8-1.25 Z050	1				
20	862545	RECLINING MECANISM AILSE SIDE	1				
21	862218	RECLINING MECANISM WALL SIDE	1				
22	866248	. BOLT SPECIAL FIXING	1				
23	500256	. NUT HEX M10-1.5 Z050	1				
24	Call order desk	. SNAP RING	1				P
25	862225	. KNOB W/ ROUND ROD INSERT MECHANISM (FORMER)	1				
25	864117	. KNOB W/SQUARE ROD INSERT MECHANISM (CURRENT)	1				
26	865486	. SCREW MA OV PH M8-1.25x35	1				
27	863743	. CENTER ARMREST ASSY / PAINTED SILVER	1				
28	865357	. ARMREST CENTER	1				
NS	865533	. WASHER CON	2				
NS	860170	. BOLT MALE	1				

		Date:07/2024	PAGE:Y2-1826-51

ARMREST PASSENGER'S SEAT - "AMAYA" WITH "BRASIL"

Item#	Part	Description	XLII 45	XLII MTH40	XLII MTH45	XLII MTH45E	NOTES
NS	Call order desk	. BOLT FEMALE	1				P
29	863539	. ARMREST COVER CENTER	1				
30	Call order desk	. ARMREST CENTER SUPPORT	1				P
31	Call order desk	SCREW MA CHE PH M6x15	1				P
33	Call order desk	SCREW OVAL HEAD M8-1.25x20	1				P
34	N32018	SCREW MA PAN PH M6-1.0x12 BKP	1				
35	865485	SCREW MA OV PH M8-1.25x25	1				
36	502806	SCREW MA FL PH M6-1.0x10 Z050	1				
37	Call order desk	PRESSURE WASHER	1				P
38	Call order desk	WASHER J6.4 DIN 125	1				P
		P) CALL ORDER DESK FOR SPECIFIC APPLICATION (V.I.N.)					

		Date:07/2024	PAGE:Y2-1826-52
ARMREST PASSENGER'S SEAT - "AMAYA" WITH "GAUDI"			

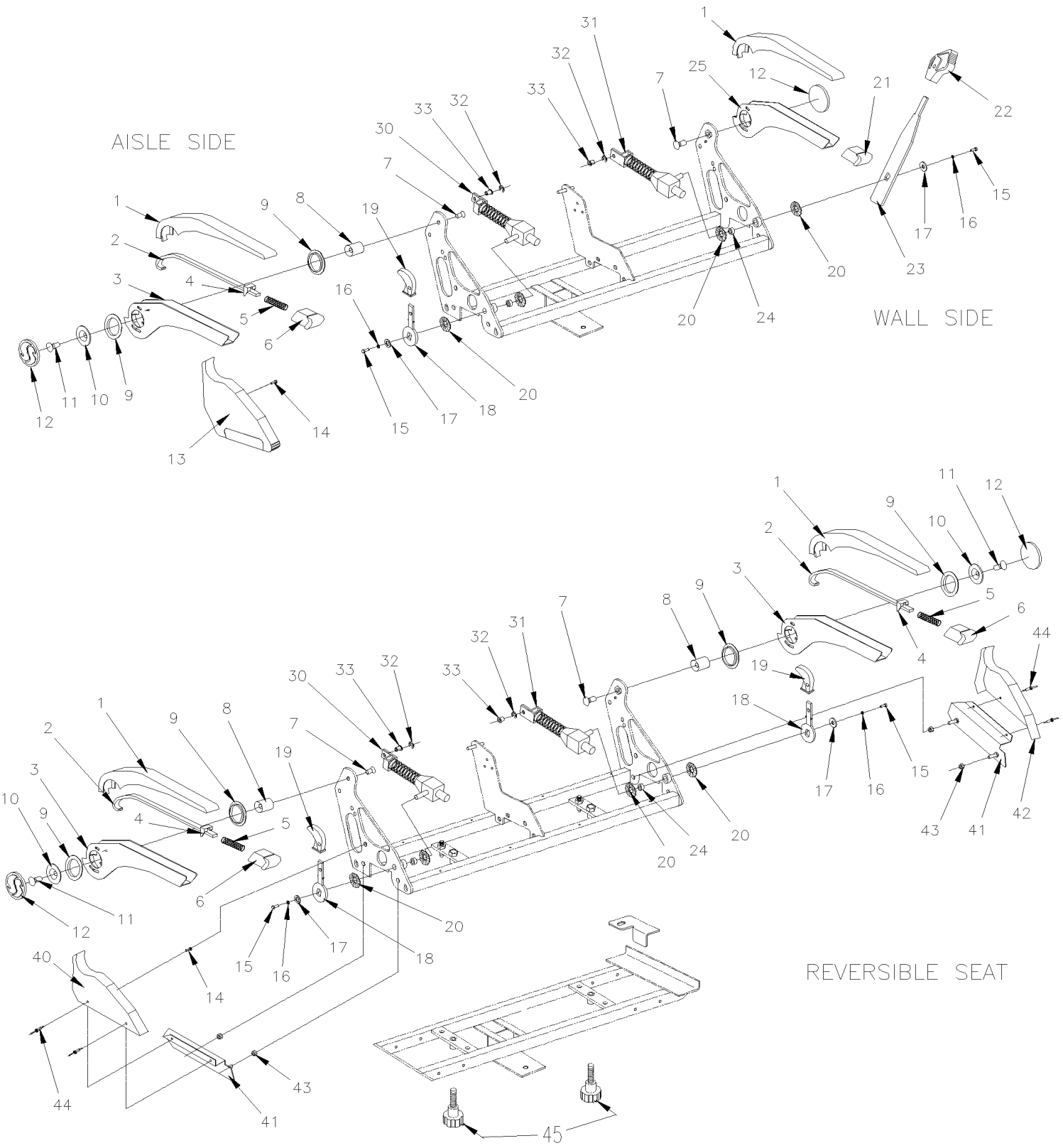

		Date:07/2024	PAGE:Y2-1826-52

ARMREST PASSENGER'S SEAT - "AMAYA" WITH "GAUDI"

Item#	Part	Description	XLII 45	XLII MTH40	XLII MTH45	XLII MTH45E	NOTES
	866091	ARMREST ASSY / AISLE SIDE / GAUDI	1				
1	864965	. ARMREST COVER	1				
2	N.S.S.	. FOLD DOWN ARMREST LEVER	1				1
3	N.S.S.	. AISLE ARMREST FRAME	1				1
4	N.S.S.	. FOLD DOWN ARMREST STOPPER	1				1
5	N.S.S.	. ARMREST SPRING	1				1
6	866078	. PUSH BUTTON	1				
7	N.S.S.	. BOLT M10x19MM	1				1
8	N.S.S.	. AXLE ARMREST	1				1
9	N.S.S.	. PLASTIC BUSHING	2				1
10	N.S.S.	. COVER	1				1
11	N.S.S.	. BOLT M10X25MM	1				1
12	864976	. ARMREST LOGO CAP R-7010	1				
13	864789	COVER AISLE SIDE W/L.H. SEAT	1				
13	864831	COVER AISLE SIDE W/R.H. SEAT	1				
14	Call order desk	BOLT 6.3x19	1				P
15	Call order desk	BOLT M6x15MM	1				P
16	Call order desk	WASHER B6.1 DIN 127	1				P
17	Call order desk	WASHER 6.4 DIN 9021	1				P
18	Call order desk	AISLE LEVER RECLINING	1				P
19	864093	KNOB RECLINING	1				
20	866260	UNSULATED WASHER	2				
21	Call order desk	BUTTON FIXED ARMREST	1				P
22	864094	KNOB WALL MECHANISM	1				
23	Call order desk	LEVER WALL MECHANISM	1				P
23	Call order desk	LEVER WALL MECHANISM (RIGHT SEAT ONLY) / W/"GAUDI" SC	1				P
24	Call order desk	BUSHING AXLE / W/"GAUDI" HR	1				P
24	865647	BUSHING AXLE / W/"GAUDI" SC	1				
25	Call order desk	WALL ARMREST FRAME	1				P
30	864045	RECLINING MECHANISM AISLE / W/"GAUDI" HR	1				
30	863881	RECLINING MECHANISM AISLE / W/"GAUDI" SC	1				
31	8611002	RECLINING MECHANISM WALL / W/"GAUDI" HR	1				
31	863882	RECLINING MECHANISM WALL / W/"GAUDI" SC	1				
32	Call order desk	WASHER #9 DIN6799	1				P
33	866260	UNSULATED WASHER	1				
40	Call order desk	COVER R.H. LATERAL W/REVERSIBLE SEAT	1				P
41	Call order desk	COVER LATERAL COMPLEMENT W/REVERSIBLE SEAT	2				P
42	864972	COVER L.H. LATERAL W/REVERSIBLE SEAT	1				
43	5001570	NUT HEX NYRT M10-1.5 Z050	4				
44	504108	RIVET POP DOME OE 1/8x1/2 AL	4				
45	862156	KNOB / ROTATING SEAT	2				

		Date:07/2024	PAGE:Y2-1826-52

ARMREST PASSENGER'S SEAT - "AMAYA" WITH "GAUDI"

Item#	Part	Description	XLII 45	XLII MTH40	XLII MTH45	XLII MTH45E	NOTES
		1) NOT SOLD SEPARATELY					
		P) CALL ORDER DESK FOR SPECIFIC APPLICATION (V.I.N.)					

		Date:07/2024	PAGE:Y2-1826-53
ARMREST PASSENGER'S SEAT - "AMAYA" WITH "SIGLIUM" TORO & TORINO			

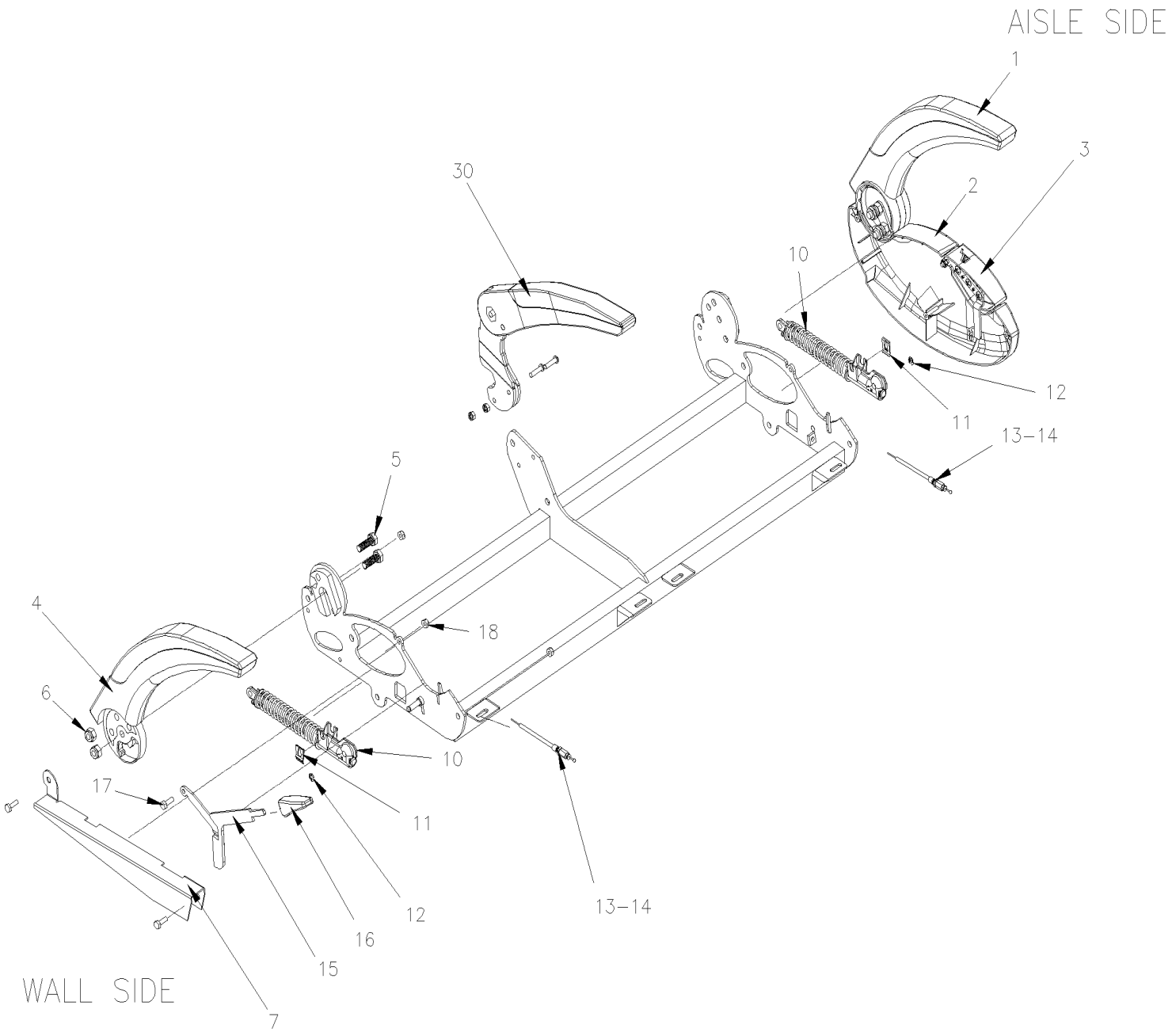

		Date:07/2024	PAGE:Y2-1826-53

ARMREST PASSENGER'S SEAT - "AMAYA" WITH "SIGLIUM" TORO & TORINO

Item#	Part	Description	XLII 45	XLII MTH40	XLII MTH45	XLII MTH45E	NOTES
		IMPORTANT NOTE:					
		TO ORDER COMPLETE PASSENGER'S SEAT KIT #,					
		SEE THE FINAL VEHICLE RECORD.					
	N.S.S.	ARMREST R.H. AISLE ASSY	1				1
. NS	863186	. ARMREST R.H.	1				
. . NS	Call order desk	. . ARMREST COVERING WOOD FINISHING	1				P
. . NS	866077	. . ARMREST COVERING DARK GREY	1				
. . NS	865378	. . ARMREST COVERING LIGHT GREY	1				
. . NS	860075	. . CAP WITH LOGO AMAYA	1				
. NS	864577	. COVER AISLE R.H.	1				
. NS	864588	. LEVER AISLE R.H.	1				
. NS	860075	. CAP WITH LOGO AMAYA	1				
	N.S.S.	ARMREST L.H. AISLE ASSY	1				1
. NS	864938	. ARMREST L.H.	1				
. . NS	Call order desk	. . ARMREST COVERING WOOD FINISHING	1				P
. . NS	866077	. . ARMREST COVERING DARK GREY	1				
. . NS	865378	. . ARMREST COVERING LIGHT GREY	1				
. . NS	860076	. . CAP WITH LOGO AMAYA	1				
. NS	864703	. COVER AISLE SIDE RH SEAT	1				
. NS	864589	. LEVER AISLE L.H.	1				
1	863186	. ARMREST R.H.	1				
. NS	Call order desk	. . ARMREST COVERING WOOD FINISHING	1				P
. NS	866077	. . ARMREST COVERING DARK GREY	1				
. NS	865378	. . ARMREST COVERING LIGHT GREY	1				
. NS	860075	. . CAP WITH LOGO AMAYA	1				
1	864938	. ARMREST L.H.	1				
. NS	Call order desk	. . ARMREST COVERING WOOD FINISHING	1				P
. NS	866077	. . ARMREST COVERING DARK GREY	1				
. NS	865378	. . ARMREST COVERING LIGHT GREY	1				
. NS	860076	. . CAP WITH LOGO AMAYA	1				
2	864577	. COVER AISLE R.H.	1				
2	864703	. COVER AISLE SIDE RH SEAT	1				
3	864588	. LEVER AISLE R.H.	1				
3	864589	. LEVER AISLE L.H.	1				
4	865070	ARMREST R.H. WINDOW SIDE	1				
5	11500930	SCREW CAP HEX M10-1.5x30 G8.8 PHC	2				
6	500256	NUT HEX M10-1.5 Z050	2				
7	Call order desk	COVER MECHANISC R.H.	1				P
7	Call order desk	COVER MECHANISC L.H.	1				P
10	863405	CYLINDER R.H.	1				

		Date:07/2024	PAGE:Y2-1826-53

ARMREST PASSENGER'S SEAT - "AMAYA" WITH "SIGLIUM" TORO & TORINO

Item#	Part	Description	XLII 45	XLII MTH40	XLII MTH45	XLII MTH45E	NOTES
10	863406	CYLINDER L.H.	1				
11	861486	CLIP / WIRE RETAINER	2				
12	865696	CLIP	1				
13	863407	CABLE	2				
14	500690	NUT HEX NYRT 1/4-28 Z050	2				
15	863413	RECLINING LEVEL L.H. WINDOW	1				
15	863414	RECLINING LEVEL R.H. WINDOW	1				
16	863356	KNOB LEVER L.H. WINDOW	1				
16	863357	KNOB LEVER R.H. WINDOW	1				
17	9415477	SCREW CAP HEX 1/4-20x3/4 ZP	1				
18	500769	NUT HEX 1/4-20 Z050	1				
30	864072	ARMREST CENTRAL ASSY / LIGHT GREY	1				
. NS	865995	. BOLT	1				
. NS	865996	. BUSHING	1				
. NS	866240	. ARMREST COVERING LIGHT GREY	1				
40	Call order desk	ARMREST WINDOW	1				P
		1) NOT SOLD SEPARATELY					
		P) CALL ORDER DESK FOR SPECIFIC APPLICATION (V.I.N.)					
		P) CALL ORDER DESK FOR SPECIFIC APPLICATION (V.I.N.)					

		Date:07/2024	PAGE:Y2-1826-60
ACCESSORIES PASSENGER'S SEAT - "AMAYA"			

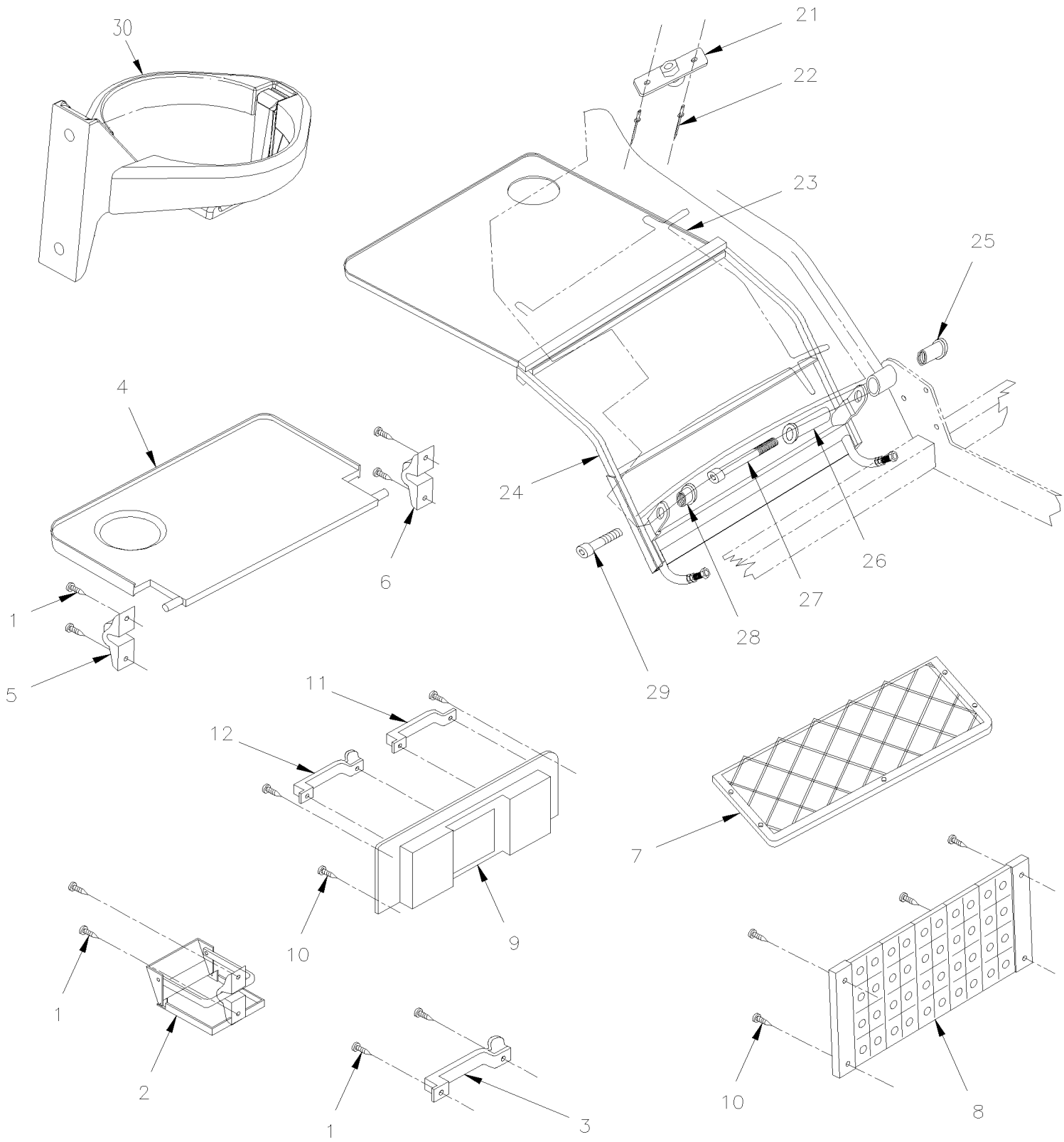

		Date:07/2024	PAGE:Y2-1826-60

ACCESSORIES PASSENGER'S SEAT - "AMAYA"

Item#	Part	Description	XLII 45	XLII MTH40	XLII MTH45	XLII MTH45E	NOTES
1	500936	SCREW TP OV PH #10x1 1/4 ZP	1				
2	861923	GLASS HOLDER / W/"AMAYA" / W/2 HOLES FOR SCREW	1				A
NS	862932	GLASS HOLDER / W/"AMAYA" / W/3 HOLES FOR SCREW	1				
3	860422	HANDLE	1				
NS	860421	HOOK	1				
4	862774	TABLE STD	1				
4	863777	TABLE STD	1				
5	N.S.S.	. SUPPORT R.H.	1				1
6	N.S.S.	. SUPPORT L.H.	1				1
7	861922	MAGAZINE NET 16" x 6 ¾"	1				
7	865369	SCREW #10 1 1/4	5				
8	861924	MAGAZINE RACK / PLASTIC 310MM x 145MM = GREY 5 BARS	1				
8	863535	MAGAZINE RACK / PLASTIC 350MM x 145MM = GREY 6 BARS	1				
9	Call order desk	BASE	1				P
10	865369	SCREW #10 1 1/4	1				
11	862938	HANDLE	1				
12	860422	HANDLE	1				
12	860421	HOOK	1				
21	863417	KNOB / BLACK	1				
210	**863418**	**KNOB / GREY / FORMER**	1				
22	504126	RIVET POP DOME OE 3/16x5/8 AL	1				
23	861920	FOOD TRAY / GREY / W/AIRPLANE TYPE	1				
24	864799	FRAME TABLE AIRPLANE TYPE	1				
25	864800	SCREW CENTER BUSHING	1				
26	864801	CENTER BUSHING	1				
27	502765	SCREW CAP HEXS M10-1.5x100 G8.8 PT ZP	1				
28	864802	SHORT BUSHING	1				
29	70314705	SCREW CAP HEXS M10-1.5x60 G8.8 ZP	1				
NS	405795	SUPPORT TABLE, AIRPLANE TYPE / ON GALLEY WALL	1				
30	862844	CUP HOLDER, RUSPA, BLACK	AR				
30	863181	CUP HOLDER, RUSPA, BLACK	AR				
NS	864860	CUP HOLDER, FLEX, GREY	AR				
		A) AS SHOWN					
		1) NOT SOLD SEPARATELY					
		P) CALL ORDER DESK FOR SPECIFIC APPLICATION (V.I.N.)					

		Date:07/2024	PAGE:Y2-1826-71
PASSENGER'S SEAT - "AMAYA" - FLIP-UP "GAUDI" HR & SC - W/ W.C.L.			

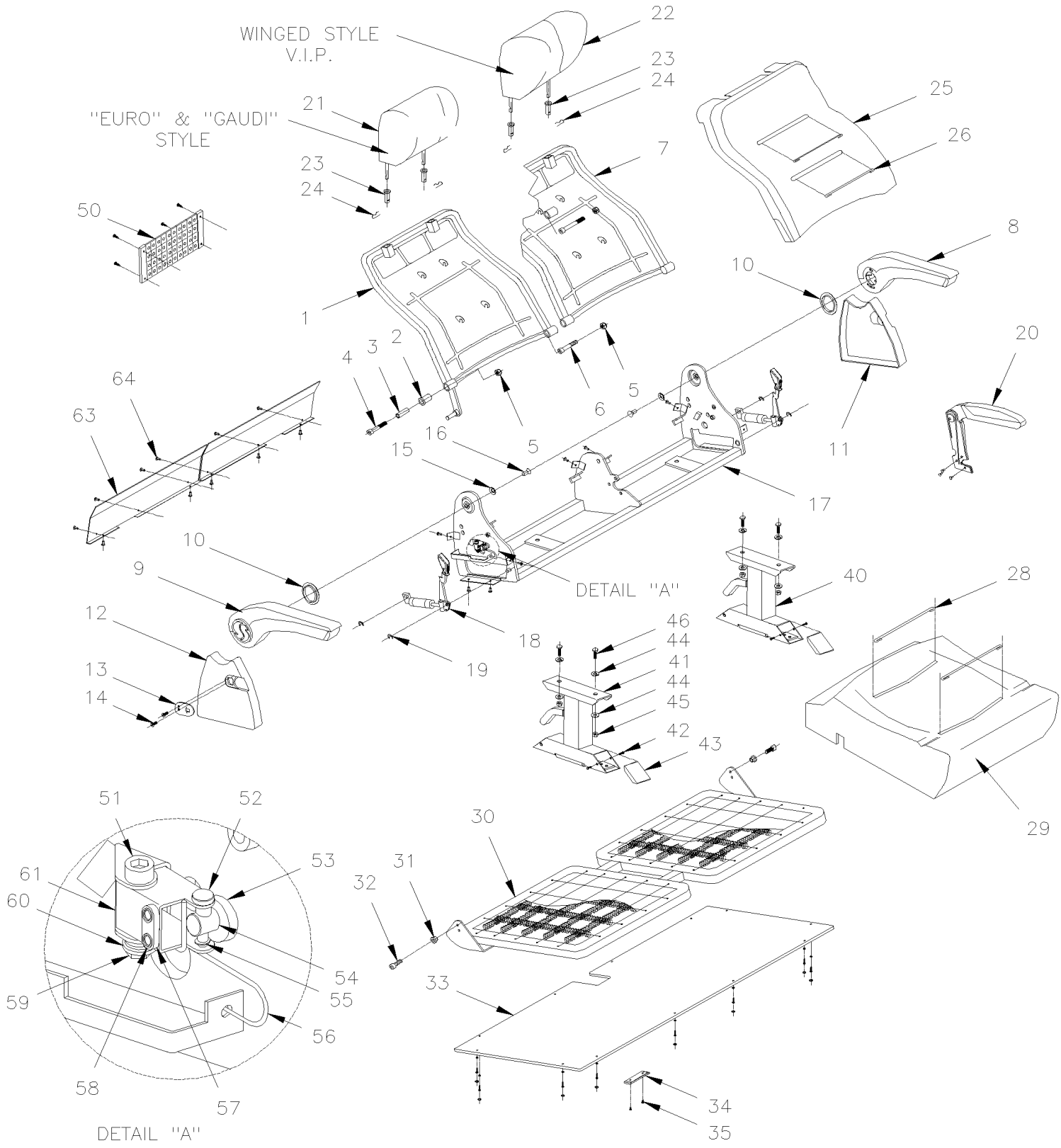

		Date:07/2024	PAGE:Y2-1826-71

PASSENGER'S SEAT - "AMAYA" - FLIP-UP "GAUDI" HR & SC - W/ W.C.L.

Item#	Part	Description	XLII 45	XLII MTH40	XLII MTH45	XLII MTH45E	NOTES
		IMPORTANT NOTE: BEFORE TO					
		TO ORDER COMPLETE PASSENGER'S SEAT					
		OR COVERING ASSY, HEAD / BACK & CUSHION					
		SEE THE FINAL VEHICLE RECORD.					
1	Call order desk	BACKREST R.H. / W/FLIPPER SEAT & AVION TABLE SEAT	1				P
1	Call order desk	BACKREST R.H. / W/FLIPPER SEAT / W/"GAUDI"	1				P
1	Call order desk	BACKREST R.H. ASSY / W/FLIPPER SEAT / W/"GAUDI" GI	1				P
1	Call order desk	BACKREST SHELL / W/"GAUDI" GI	1				P
2	865560	BUSHING HYTREL	1				
2	Call order desk	BUSHING PLASTIC / W/"GAUDI" SC	1				P
3	Call order desk	INSIDE METAL BUSHING	1				P
3	Call order desk	INSIDE METAL BUSHING / W/"GAUDI" SC	1				P
4	70314705	SCREW CAP HEXS M10-1.5x60 G8.8 ZP	1				
5	500256	NUT HEX M10-1.5 Z050	1				
6	502765	SCREW CAP HEXS M10-1.5x100 G8.8 PT ZP	1				
7	Call order desk	BACKREST L.H. / W/FLIPPER SEAT & AVION TABLE SEAT	1				P
7	Call order desk	BACKREST L.H. / W/FLIPPER SEAT / W/"GAUDI"	1				P
7	Call order desk	BACKREST L.H. ASSY / W/FLIPPER SEAT / W/"GAUDI" GI	1				P
7	Call order desk	BACKREST SHELL / W/"GAUDI" GI	1				P
8	864020	ARMREST ASSY L.H. / W/FLIPPER SEAT	1				
9	864019	ARMREST ASSY R.H. / W/FLIPPER SEAT	1				
10	N.S.S.	PLASTIC BUSHING	1				1
11	865351	CAP PLASTIC L.H. / W/"GAUDI" STATIONARY	1				
11	Call order desk	CAP PLASTIC L.H. / W/"GAUDI" SLIDE	1				P
12	865352	CAP PLASTIC R.H.	1				
13	Call order desk	BLOCK HANDLE	1				P
14	Call order desk	SCREW MA CHE PH M6x15	1				P
15	865543	WASHER #10.5MM DIN5797	1				
16	860111	SCREW CAP FL HEXS M10-1.5x16	1				
17	Call order desk	STRUCTURE R.H. / W/FLIPPER SEAT	1				P
17	Call order desk	STRUCTURE R.H. / W/FLIPPER SEAT	1				P
17	Call order desk	STRUCTURE L.H. / W/FLIPPER SEAT	1				P
17	Call order desk	STRUCTURE R.H. / W/FLIPPER SEAT & AVION TABLE SEAT	1				P
17	Call order desk	STRUCTURE L.H. / W/FLIPPER SEAT & AVION TABLE SEAT	1				P
17	Call order desk	STRUCTURE L.H. / W/FLIPPER SEAT / SLIDE TO VERIFIED To VOIR	1				P
18	863540	RECLINING MECHANISM ASSY AISLE SIDE	1				
. NS	IS-136	. INSTRUCTION SHEET	1				
18	862546	RECLINING MECHANISM ASSY WALL SIDE	1				
. NS	IS-136	. INSTRUCTION SHEET	1				
19	Call order desk	WASHER #9 DIN6799	1				P
20	863352	CENTER ARMREST ASSY / PAINTED CHARCOAL	1				

		Date:07/2024	PAGE:Y2-1826-71

PASSENGER'S SEAT - "AMAYA" - FLIP-UP "GAUDI" HR & SC - W/ W.C.L.

Item#	Part	Description	XLII 45	XLII MTH40	XLII MTH45	XLII MTH45E	NOTES
20	Call order desk	SCREW MA CHE PH M6x15	1				P
21	863315	HEADREST FOAM / TYPE "BRAZIL" & "EUROTECH"	1				
21	Call order desk	HEADREST FOAM / TYPE "GAUDI HR"	1				P
NS	Call order desk	COVERING HEADREST ASSY "GAUDI" S.C.C.	1				P
22	862933	HEADREST ASSY / TYPE WINGED "VIP"	1				
23	864810	GUIDE SLIDING	1				
24	866204	BACKREST CLIP	1				
25	865141	CUSHION FOAM	1				
25	Call order desk	BACKREST FOAM / W/"GAUDI"	1				P
25	Call order desk	BACKREST FOAM AISLE / W/"GAUDI" GI	1				P
25	Call order desk	BACKREST FOAM WALL / W/"GAUDI" GI	1				P
26	Call order desk	BACKREST TUFTING WIRE "EUROTECH" & "BRASIL	1				P
26	Call order desk	BACKREST TUFTING WIRE / LARGE / W/"GAUDI" & "EUROTECH"	1				P
NS	Call order desk	COVERING BACKREST ASSY S.C.C. / W/"GAUDI"	1				P
27	Call order desk	COVERING BACKREST ASSY S.C.C. / W/"GAUDI" GI	1				P
28	Call order desk	CUSHION TUFTING WIRE "EUROTECH" & "BRASIL	1				P
29	Call order desk	CUSHION FOAM	1				P
NS	Call order desk	COVERING CUSHION ASSY S.C.C. / W/"GAUDI"	1				P
30	865599	CUSHION SET STRUCTURE / STREET SIDE	1				
30	Call order desk	SEAT FRAME ASSY /W/FLIPPER SEAT / STATIONARY / W/"GAUDI"	1				P
30	Call order desk	SEAT FRAME ASSY /W/FLIPPER SEAT / SLIDE / W/"GAUDI"	1				P
31	866191	SWIVEL BUSHING	1				
32	Call order desk	SCREW CAP HEXS M10x25	1				P
33	Call order desk	CAP CUSHION SEAT / W/FLIPPER SEAT	1				P
34	Call order desk	SEAT FIXING BRACKET	1				P
35	Call order desk	BOLT 3.9X13MM	1				P
40	862917	PEDESTAL ASSY R.H. / WFLIPPER SEAT / SLIDE	1				
41	865028	PEDESTAL ASSY L.H. / WFLIPPER SEAT / SLIDE	1				
42	504619	CLIP CHRISTMAS TREE / BLACK 7/32"O.D.x1/2" HOLE 3/16	4				
43	862585	PEDESTAL CAP / BLACK	1				
. NS	864028	. CLIP CHRISTMAS TREE / BLACK 11MM O.D. x17MM HOLE 4MM	2				
43	863907	PEDESTAL CAP / GREY	2				
. NS	864029	. CLIP CHRISTMAS TREE / GREY 11MM O.D. x17MM HOLE 4MM	2				
44	866243	PRESSURE WASHER 7/16" 10MM	1				
45	500256	NUT HEX M10-1.5 Z050	1				
46	5001526	SCREW CAP HEX M16-2.0x45 G10.9 DP	1				
50	**Y2-1826-60**	**ACCESSORIES PASSENGER'S SEAT - "AMAYA"**	1				
51	860197	SCREW CAP HEXS M8-1.25x50	1				
52	Call order desk	BLOCKING PIN	1				P
53	865491	REFERENCE BUSHING FM810120J	1				
54	Call order desk	BLOCKING AXLE	1				P
55	Call order desk	WASHER DIN-6799 5MM	1				P

		Date:07/2024	PAGE:Y2-1826-71

PASSENGER'S SEAT - "AMAYA" - FLIP-UP "GAUDI" HR & SC - W/ W.C.L.

Item#	Part	Description	XLII 45	XLII MTH40	XLII MTH45	XLII MTH45E	NOTES
56	Call order desk	SPRING	1				P
57	Call order desk	INSERT	1				P
58	Call order desk	RIVET	1				P
59	Call order desk	NUT HEX NYRT M8-1.25	1				P
60	Call order desk	ACTION SPRING	1				P
61	Call order desk	POPPER	1				P
63	Call order desk	KICK PLATE BACKREST	1				P
64	504118	RIVET POP DOME OE 3/16x3/8 AL	1				
70	**Y2-1826-40**	**PASSENGER'S SEAT - "AMAYA" - FOOTREST & PEDESTAL**					
100	323654	SEAT TRACK COVER 12' / EACH SEAT / W/COVERING FLOOR	AR				
100	323963	SEAT TRACK COVER 8' / EACH SEAT / W/COVERING FLOOR	AR				
		1) NOT SOLD SEPARATELY					
		P) CALL ORDER DESK FOR SPECIFIC APPLICATION (V.I.N.)					

		Date:07/2024	PAGE:Y2-1827-02
PASSENGER'S SEAT - "ULTRA"			

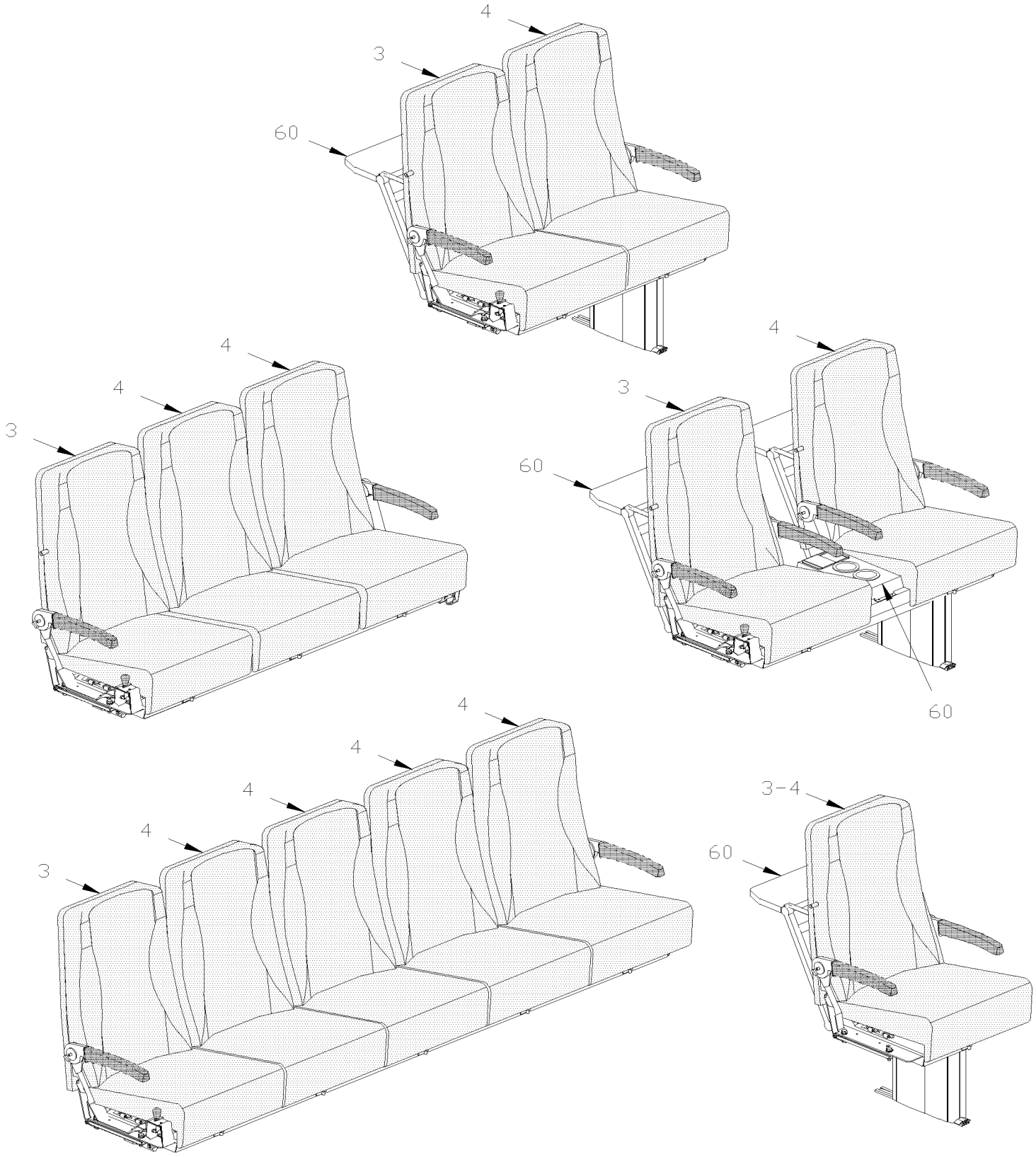

		Date:07/2024	PAGE:Y2-1827-02
PASSENGER'S SEAT - "ULTRA"			

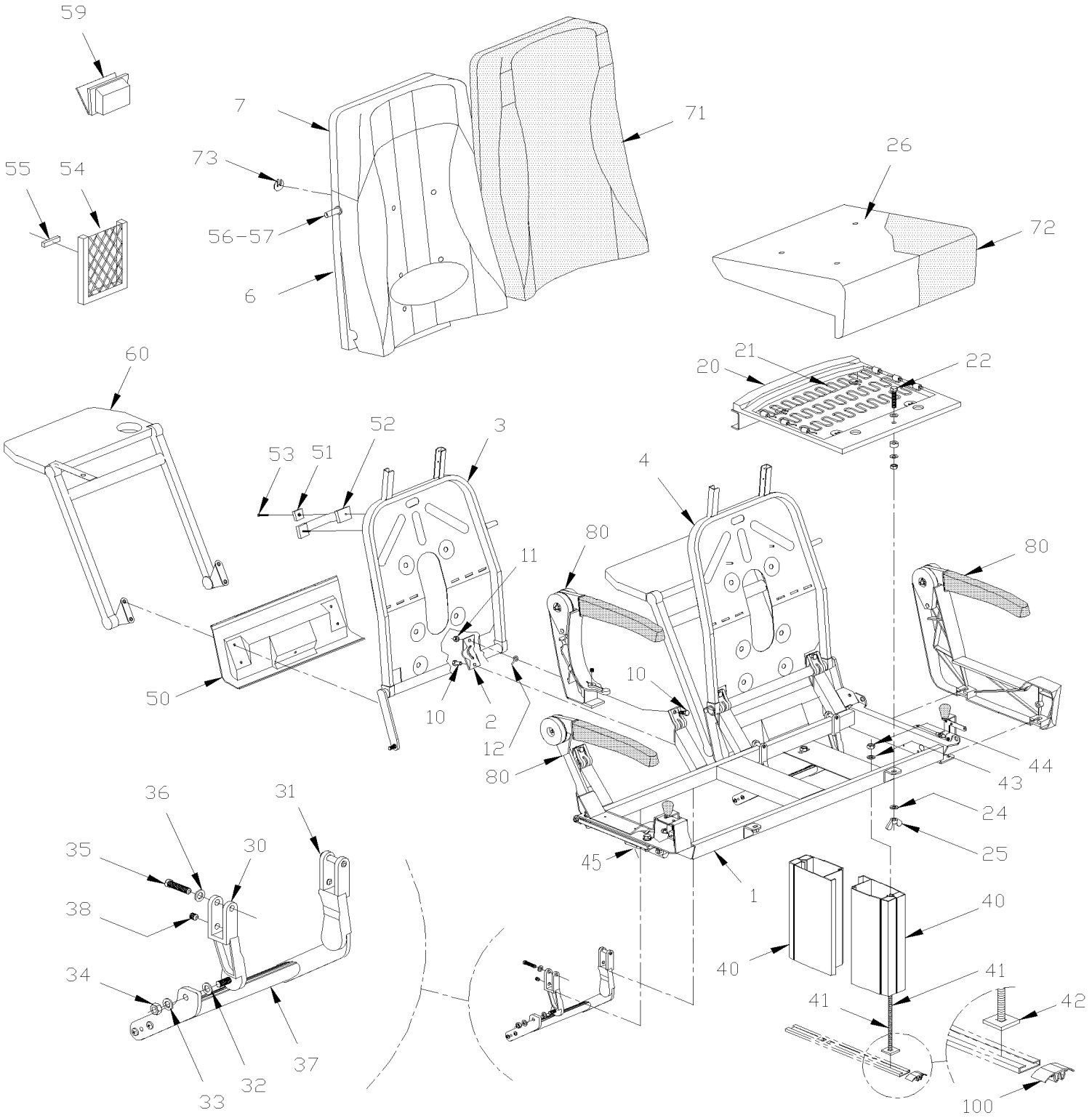

		Date:07/2024	PAGE:Y2-1827-02

PASSENGER'S SEAT - "ULTRA"

Item#	Part	Description	XLII 45	XLII MTH40	XLII MTH45	XLII MTH45E	NOTES
	363927	SEAT ASSY L.H. / 2 PASSENGERS / 42" HIGH	AR				
	363928	SEAT ASSY R.H. / 2 PASSENGERS / 42" HIGH	AR				
	363929	SEAT ASSY ROTATING / "ULTRA"	AR				
	363931	SEAT ASSY REAR / 2 PASSENGERS / 42" HIGH	AR				
	363932	SEAT ASSY REAR / 5 PASSENGERS / 42" HIGH	AR				
1	363842	. STRUCTURE ASSY L.H. / 2 PASSENGERS	1				
1	363841	. STRUCTURE ASSY R.H. / 2 PASSENGERS	1				
1	363836	. SEAT FRAME ASSY / "ROTATING" SEAT	1				
1	363843	. STRUCTURE ASSY REAR / 3 PASSENGERS	1				
1	363844	. STRUCTURE ASSY REAR / 5 PASSENGERS	1				
1	363837	. STRUCTURE ASSY R.H. V.I.P. / 1 PASSENGERS	1				
1	363840	. STRUCTURE ASSY L.H. V.I.P. / 1 PASSENGERS	1				
1	363838	. STRUCTURE ASSY R.H. / 2 PASSENGERS V.I.P.	1				
1	363839	. STRUCTURE ASSY R.H. V.I.P. / 2 PASSENGERS	1				
2	363246	. COLLAR	4				
3	363834	. BACKREST R.H.	1				
4	363835	. BACKREST L.H.	1				B
6	363186	. FOAM BACKREST THICK	1				
6	363252	. FOAM BACKREST THIN W/42"	1				
6	363350	. FOAM BACKREST THIN W/40"	1				
7	363348	. FOAM ASSY, HEADREST 40" HIGHT / "ULTRA"	1				
7	363251	. FOAM ASSY, HEADREST 42" HIGHT / "ULTRA"	1				
NS	500583	. SCREW TP PAN PH #6x1/2 Z050	4				
NS	500240	. WASHER LO EXT .195x.410x.025 Z050	4				
10	5001336	. SCREW CAP HEXF SERR 5/16-18x3/4 Z050	8				
11	5001113	. NUT HEX JAM NYRT 5/16-18	8				
12	363273	. SPRING EYE	4				
20	363646	. SEAT FRAME ASSY W/SPRING	1				
21	363650	. . SPRING	3				
22	362353	. . SCREW	1				
24	500441	. WASHER FL .312x.734x.065 Z050	2				
25	500782	. NUT WING 5/16-18 Z050	2				
26	363645	. FOAM	1				
30	363437	. BRACKET L.H.	1				
31	363436	. BRACKET R.H.	1				
32	502723	. WASHER FL .386x.750x.050 NYL	2				
33	500441	. WASHER FL .312x.734x.065 Z050	2				
34	500777	. NUT HEX STO 5/16-18 Z050	2				
35	500183	. SCREW CAP HEX 5/16-18x1 1/2 G5 PT Z050	2				
36	500476	. WASHER LO SPT .317x.586x.078 Z050	2				
37	362928	. FOOTREST ASSY	1				
38	502781	. SCREW SET HEXS CUP 5/16-18x1/4	2				

		Date:07/2024	PAGE:Y2-1827-02

PASSENGER'S SEAT - "ULTRA"

Item#	Part	Description	XLII 45	XLII MTH40	XLII MTH45	XLII MTH45E	NOTES
40	363577	. PEDESTAL SQ END / 279MM / 10.98" / 2 PIECES To 5-8631	2				
40	364038	. PEDESTAL SQ END / ONE PIECE / 279MM / 10.98" From 5-8632	1				
NS	364076	. REINFORCEMENT PEDESTAL / ANGLE REAR OF PEDESTAL / 58MMx 20MM From 6-8789	1				
41	5001600	. SCREW CRG 3/8-16x12 G5 Z050	2				
42	363085	. PLATE ANCHOR / CARRIAGE BOLT INSIDE TRACK / 1 1/4" X 1 1/4" To 5-8631	2				
42	360052	. PLATE ANCHOR / CARRIAGE BOLT INSIDE TRACK / 1 1/4" X 3 1/2" From 5-8632	2				
43	500445	. WASHER FL .437x1.000x.083 Z050	2				
44	500265	. NUT HEX STO 3/8-16 Z050	2				
44	364133	. REINFORCMENT / FIXED BETWEEN SEAT & GUARD	1				
45	363821	. ATTACHMENT PLATE / "J" SHAPE TO FIX SEAT TO WALL TRACK WALL TRACK	1				
. NS	500183	. . SCREW CAP HEX 5/16-18x1 1/2 G5 PT Z050	2				
. NS	500942	. . WASHER LO SPT 8.1x14.8x2.0 N500	2				
45	364132	. ATTACHMENT PLATE / "J" SHAPE TO FIX SEAT TO WALL TRACK WALL TRACK	1				
. NS	500829	. . SCREW CAP HEX M10-1.5x40 G8.8	2				
. NS	500257	. . WASHER LO SPT 10.2x18.1x2.2 Z050	2				
50	362866	. FINISHING LOWER / L.H. / NORYL To Y-7336	1				
50	363946	. FINISHING LOWER / L.H. / NORYL From Y-7337	1				
50	362867	. FINISHING LOWER / R.H. / NORYL To Y-7336	1				
50	363947	. FINISHING LOWER / R.H. / NORYL From Y-7337	1				
51	860421	. HOOK	1				
52	860422	. HANDLE	1				
NS	505229	. SPACER 3/8 I.D. X 3/8 LG	2				
53	502521	. SCREW TC OV PH #8-32x1 BK	2				
54	362707	. MAGAZINE NET 13" x 6 ½"	1				
54	860809	. MAGAZINE NET 14" x 7 ¼"	1				
55	500353	. SCREW TP FL PH #8x3/4 BK	4				
56	362943	. STOPPER LONG / WV.I.P. SEAT	1				
56	362942	. STOPPER SHORT / W/STANDARD SEAT	1				
57	5001019	. SCREW TP OV PH #10x2 EMN	1				
NS	5001116	. NUT SPR U #10A .025-.062	1				
59	861277	. ASHTRAY / PLASTIC	1				
60	**Y2-1829-00**	**. ACCESSORIES PASSENGER'S SEAT - "PREVOST"**					
71	Call order desk	. COVERING BACKREST ASSY / S.C.C. W/40" HIGHT / "ULTRA"	1				P
71	363254P	. COVERING ASSY, BACKREST / S.C.C. W/42" HIGHT	1				
72	363676	. COVERING SEATREST ASSY / S.C.C. / ALL NEW W/SPRING	1				
73	362716	. ATTACHMENT / ROUND "W" SHAPE TO FIX COVER	8				
NS	682259	. SEALANT TAPE / CLEAR / 1/32"x1 1/2"x65' / 1795	AR				B
80	**Y2-1827-52**	**. ARMREST PASSENGER'S SEAT - "PREVOST"**					
100	323654	SEAT TRACK COVER 12' / EACH SEAT / W/COVERING FLOOR	AR				
100	323963	SEAT TRACK COVER 8' / EACH SEAT / W/COVERING FLOOR	AR				

		Date:07/2024	PAGE:Y2-1827-02

PASSENGER'S SEAT - "ULTRA"

Item#	Part	Description	XLII 45	XLII MTH40	XLII MTH45	XLII MTH45E	NOTES
		B) QTY OF 2 WITH 3 PASSENGERS REAR SEAT AND QTY OF 4 WITH 5 PASSENGERS REAR SEAT					
		P) CALL ORDER DESK FOR SPECIFIC APPLICATION (V.I.N.)					

		Date:07/2024	PAGE:Y2-1827-11
PASSENGER'S SEAT - ROTATING "PREVOST			

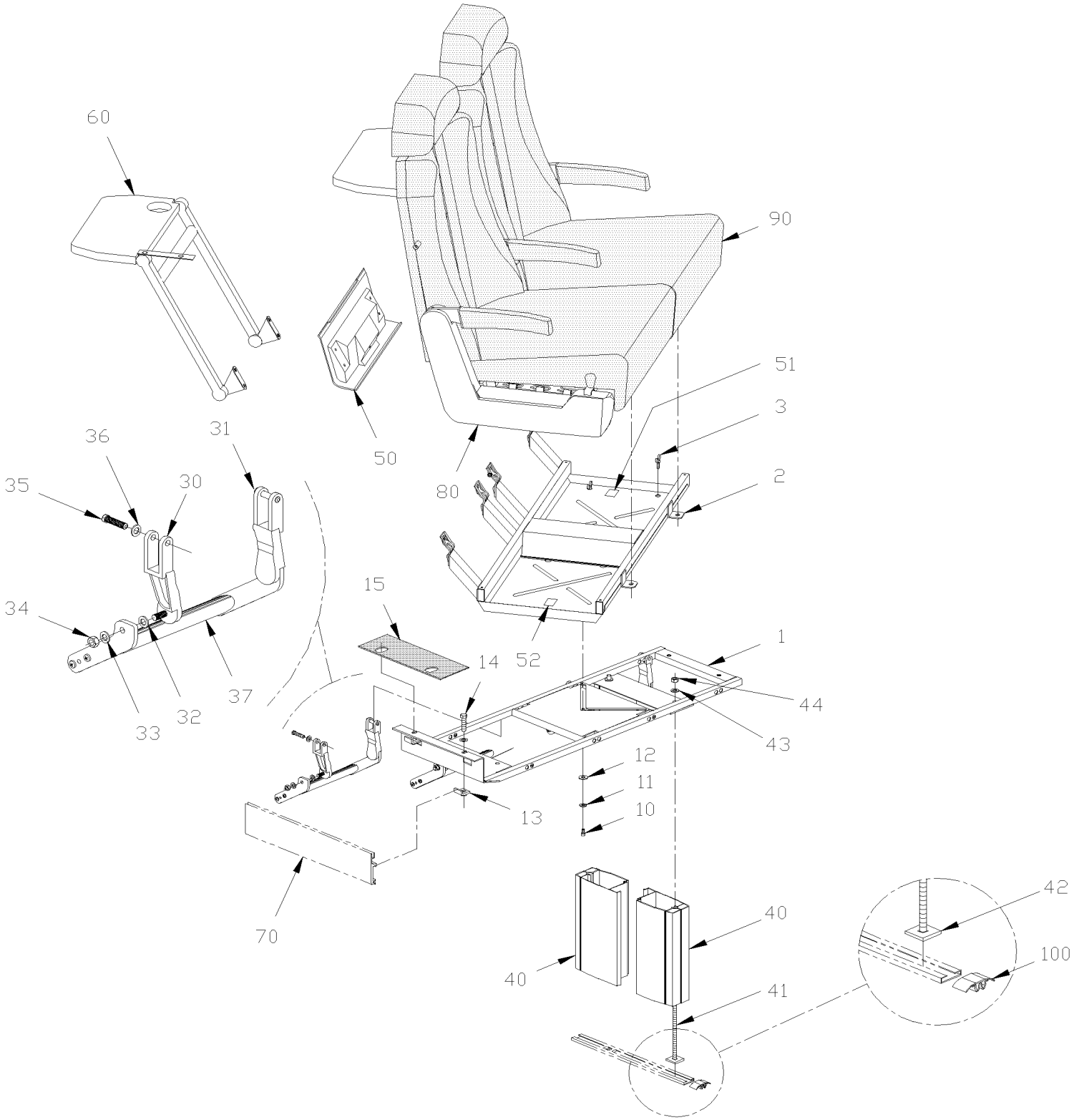

		Date:07/2024	PAGE:Y2-1827-11

PASSENGER'S SEAT - ROTATING "PREVOST

Item#	Part	Description	XLII 45	XLII MTH40	XLII MTH45	XLII MTH45E	NOTES
		THIS PAGE SHOWS ONLY PARTS RELATED					
		WITH ROTATING SEAT. ALLS					
		OTHERS PARTS ARE ILLUSTRATED IN PAGES					
	363923	SEAT ASSY ROTATING / "TOURISMO II" / 42" HIGH	AR				
	363929	SEAT ASSY ROTATING / "ULTRA"	AR				
1	362340	MOUNTING BASE ASSY / "ROTATING" SEAT	1				
2	363836	SEAT FRAME ASSY / "ROTATING" SEAT	1				
3	5001302	SCREW TH SHR 1/4-20x3/4 SS	4				
3	500468	WASHER FL .281x1.250x.065 Z050	4				
10	500162	SCREW CAP HEX 1/4-20x1/2 G5 Z050	1				
11	500473	WASHER LO SPT .262x.489x.062 Z050	1				
12	500462	WASHER FL .343x1.500x.083 SS	1				
13	362333	ATTACHMENT NUT / "L" SHAPE TO FIX SEAT TO WALL TRACK WALL TRACK	2				
14	500182	SCREW CAP HEX 5/16-18x1 1/4 G5 PT Z050	2				
15	362405	RUBBER PROTECTOR PAD	1				
30	363439	BRACKET L.H.	2				
31	363438	BRACKET R.H.	2				
32	502723	WASHER FL .386x.750x.050 NYL	2				
33	500441	WASHER FL .312x.734x.065 Z050	2				
34	500777	NUT HEX STO 5/16-18 Z050	2				
35	5001335	SCREW CAP HEXF SERR 5/16-18x1 1/2 Z050	2				
36	500476	WASHER LO SPT .317x.586x.078 Z050	2				
37	362928	FOOTREST ASSY	2				
40	363579	PEDESTAL SQ END / W/ROTATING SEAT / 224MM 8.81" To 5-8631	2				
40	364039	PEDESTAL SQ END / 224MM 8.81" / W/ROTATING SEAT / ONE PIECE / 224MM 8.81" From 5-8632	1				
NS	364076	REINFORCEMENT PEDESTAL / ANGLE REAR OF PEDESTAL / 58MMx 20MM From 6-8789	1				
41	5001078	SCREW CRG 3/8-16x9 3/4 Z050	2				
42	363085	PLATE ANCHOR / CARRIAGE BOLT INSIDE TRACK / 1 1/4" X 1 1/4" To 5-8631	2				
42	360052	PLATE ANCHOR / CARRIAGE BOLT INSIDE TRACK / 1 1/4" X 3 1/2" From 5-8632	2				
43	362410	WASHER	2				
44	500265	NUT HEX STO 3/8-16 Z050	2				
46	362627	PLATE ANCHOR / 3/8-16 BOLT INSIDE TRACK / 1 1/4" X 1 1/4"	AR				
46	500270	WASHER FL .406x1.000x.063 SS	AR				
46	500305	SCREW CAP HEX 3/8-16x7/8 G5 Z050	AR				
46	500478	WASHER LO SPT .380x.683x.094 Z050	AR				
50	362702	FINISHING LOWER R.H.	1				
50	362701	FINISHING LOWER L.H.	1				
51	361752	DECAL "TO OPERATE.." / FIXED AT SEAT STRUCTURE / ENGLISH & FRANCAIS	1				
52	361751	DECAL "TO OPERATE.." / FIXED AT WINDOW	1				
60	**Y2-1829-00**	**ACCESSORIES PASSENGER'S SEAT - "PREVOST"**					

		Date:07/2024	PAGE:Y2-1827-11

PASSENGER'S SEAT - ROTATING "PREVOST

Item#	Part	Description	XLII 45	XLII MTH40	XLII MTH45	XLII MTH45E	NOTES
70	**Y2-2221-10**	**DUCTING HEATER & A/C - BUS FLOOR**					
80	**Y2-1827-52**	**ARMREST PASSENGER'S SEAT - "PREVOST"**					
90	**Y2-1827-02**	**PASSENGER'S SEAT - "ULTRA"**					
90	**Y2-1828-01**	**PASSENGER'S SEAT - "TOURISMO II"**					
100	323654	SEAT TRACK COVER 12' / EACH SEAT / W/COVERING FLOOR	AR				
100	323963	SEAT TRACK COVER 8' / EACH SEAT / W/COVERING FLOOR	AR				

		Date:07/2024	PAGE:Y2-1827-52
ARMREST PASSENGER'S SEAT - "PREVOST"			

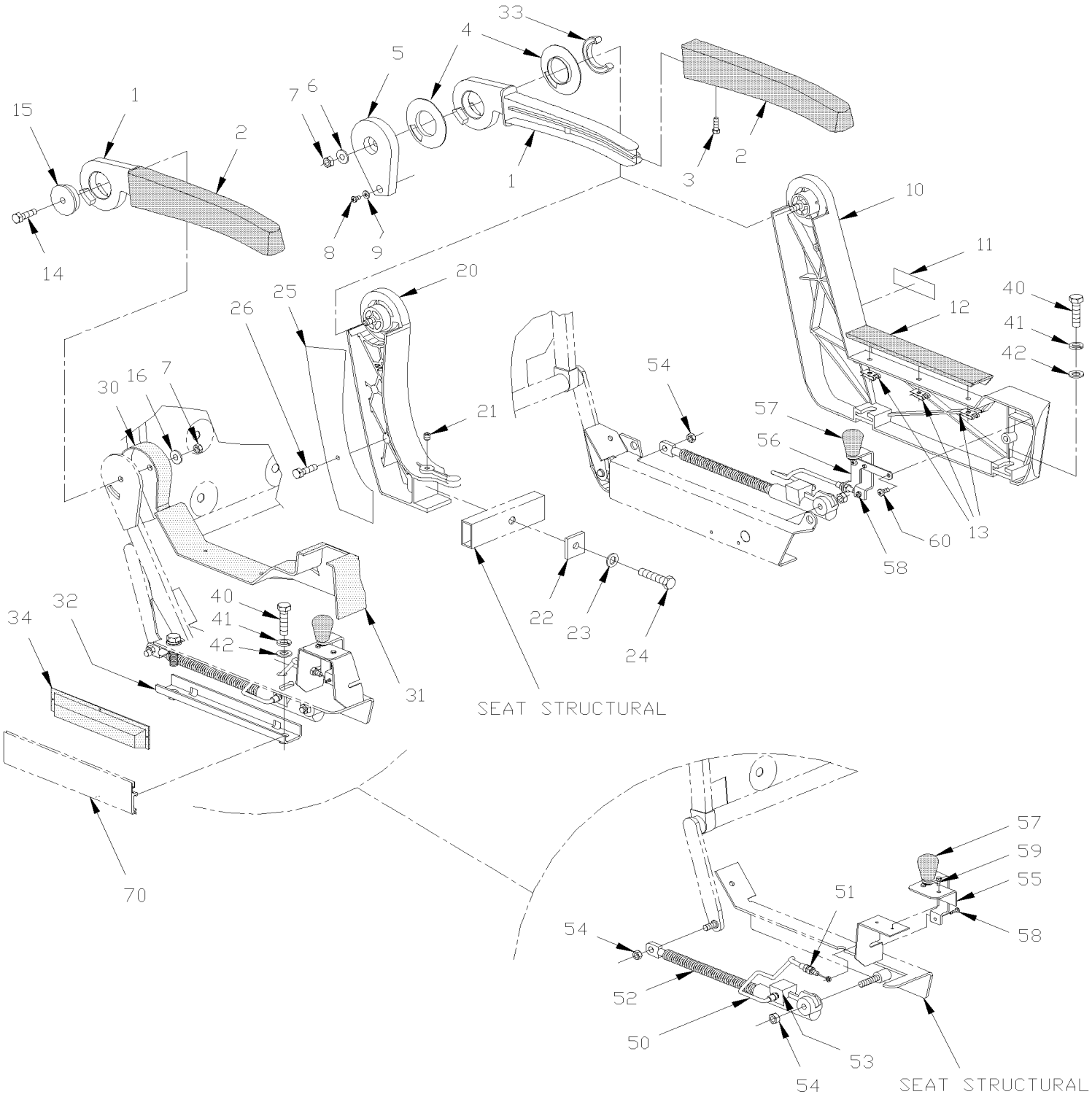

		Date:07/2024	PAGE:Y2-1827-52

ARMREST PASSENGER'S SEAT - "PREVOST"

Item#	Part	Description	XLII 45	XLII MTH40	XLII MTH45	XLII MTH45E	NOTES
1	363597	ARMREST / SHORT	3				
1	362933	ARMREST L.H. / V.I.P.	2				
1	362934	ARMREST R.H. / V.I.P.	2				
2	363598	COVERING ARMREST / SHORT	1				
2	362541	COVERING ARMREST / V.I.P.	1				
NS	363425	FOAM COVERING ARMREST V.I.P.	AR				
3	500686	SCREW TP OV PH #6x1/2 BK	1				
NS	500345	WASHER FN CKF .187x.500x.090 BR BK	1				
4	363575	. SPACER PLASTIC / FRICTION DISK	2				
5	363565	CLOSING L.H. / GREY CHARCOAL	1				
5	362913	CLOSING / GREY CHARCOAL	2				V
5	363566	CLOSING R.H. / GREY CHARCOAL	1				
6	502510	WASHER FL .375x.875x.083	1				
7	5001113	NUT HEX JAM NYRT 5/16-18	2				
8	500658	SCREW TC PAN PH #10-24x3/4 Z050	1				
9	500470	WASHER LO SPT .193x.334x.047 Z050	1				
10	363833	. SIDE L.H. / CASTING PAINTED CHARCOAL	1				
10	363832	. SIDE R.H. / CASTING PAINTED CHARCOAL	1				
10	363858	. SIDE R.H. / CASTING PAINTED CHARCOAL / V.I.	1				V
10	363859	. SIDE L.H. / CASTING PAINTED CHARCOAL / V.I.	1				V
11	362907	. DECAL / "PREVOST"	1				
12	362871	. COVERING L.H.	1				
12	362971	. COVERING R.H.	1				
13	509814	. NUT PUSH RND ARC 3/16	3				
14	500182	SCREW CAP HEX 5/16-18x1 1/4 G5 PT Z050	1				
15	362315	WASHER RETAINING W/FLANGED 40.26MM O.D. X 44.5 MM O.D.	1				
16	500441	WASHER FL .312x.734x.065 Z050	1				
20	363564	SUPPORT / CENTRAL ARMREST / PAINTED CHARCOAL	1				
20	362904	SUPPORT / CENTRAL ARMREST / PAINTED CHARCOAL	2				V
21	502781	SCREW SET HEXS CUP 5/16-18x1/4	1				
22	362711	PLATE TIGHTENING / SEAT	1				
23	500476	WASHER LO SPT .317x.586x.078 Z050	1				
24	500186	SCREW CAP HEX 5/16-18x2 1/2 G5 Z050	1				
25	362927	PLATE / W/V.I.P. CENTRAL SUPPORT / CHARCOAL	1				
26	500654	SCREW TC BDG PH #8-32x1/2 Z050	2				
30	362697	COVER R.H. / NORYL / WINDOW SIDE	1				
30	362712	COVER L.H. / NORYL / WINDOW SIDE	1				
31	363780	GUARD L.H. / MECHANISM	1				
31	363779	GUARD R.H. / MECHANISM	1				
31	363958	GUARD R.H. / MECHANISM LOUNGE SEAT ONLY	1				A
31	362580	GUARD R.H. / MECHANISM / V.I.P. To Y-7336	1				
31	363857	GUARD R.H. / MECHANISM / W/VIP SEAT From Y-7337	1				

		Date:07/2024	PAGE:Y2-1827-52

ARMREST PASSENGER'S SEAT - "PREVOST"

Item#	Part	Description	XLII 45	XLII MTH40	XLII MTH45	XLII MTH45E	NOTES
31	362633	GUARD L.H. / MECHANISM / V.I.P. To Y-7336	1				
31	363856	GUARD L.H. / MECHANISM / W/VIP SEAT From Y-7337	1				
32	363821	ATTACHMENT PLATE / "J" SHAPE TO FIX SEAT TO WALL TRACK WALL TRACK	1				
. NS	500183	. SCREW CAP HEX 5/16-18x1 1/2 G5 PT Z050	2				
. NS	500942	. WASHER LO SPT 8.1x14.8x2.0 N500	2				
32	364132	ATTACHMENT PLATE / "J" SHAPE TO FIX SEAT TO WALL TRACK WALL TRACK	1				
. NS	500829	. SCREW CAP HEX M10-1.5x40 G8.8	2				
. NS	500257	. WASHER LO SPT 10.2x18.1x2.2 Z050	2				
32	364133	REINFORCMENT / FIXED BETWEEN SEAT & GUARD	1				
33	362941	SLIDE INSERT PLASTIC / LONG 150 DEG	4				V
34	362579	CAP FINISHING / WALL / V.I.P.	1				V
40	500183	SCREW CAP HEX 5/16-18x1 1/2 G5 PT Z050	2				
41	500476	WASHER LO SPT .317x.586x.078 Z050	2				
42	502510	WASHER FL .375x.875x.083	2				
50	861444	CABLE ASSY	1				
51	500692	. NUT HEX 1/4-28 Z050	2				
52	363782	CYLINDER L.H. To Y-7336	1				
52	861926	CYLINDER L.H. From Y-7337	1				
52	363783	CYLINDER R.H. To Y-7336	1				
52	861927	CYLINDER R.H. From Y-7337	1				
53	861486	CLIP / WIRE RETAINER	2				
54	500690	NUT HEX NYRT 1/4-28 Z050	2				
55	363830	LEVER L.H. / WINDOW SIDE	1				
55	363829	LEVER R.H. / WINDOW SIDE	1				
56	363825	LEVER L.H. / CASTING	1				
56	363826	LEVER R.H. / CASTING	1				
57	861442	. KNOB	1				
NS	500394	. SCREW MA TR SLT 1/4-20x1/2 Z050	1				
58	500557	SCREW MA PAN PH #8-32x3/8 SS	2				
59	5001312	SCREW TP TR PH #8x5/8 Z050	1				
60	500657	SCREW TC TR PH #10-24x1/2 Z050	2				
70	**Y2-2221-10**	**DUCTING HEATER & A/C - BUS FLOOR**					
		A) USE ONLY WITH LOUNGE SEAT BACK OF THE VEHICLE					
		V) WITH V.I.P. SEAT ONLY					

		Date:07/2024	PAGE:Y2-1827-70
PASSENGER'S SEAT - "TOURISMO II" - FLIP-UP W/W.C.L.			

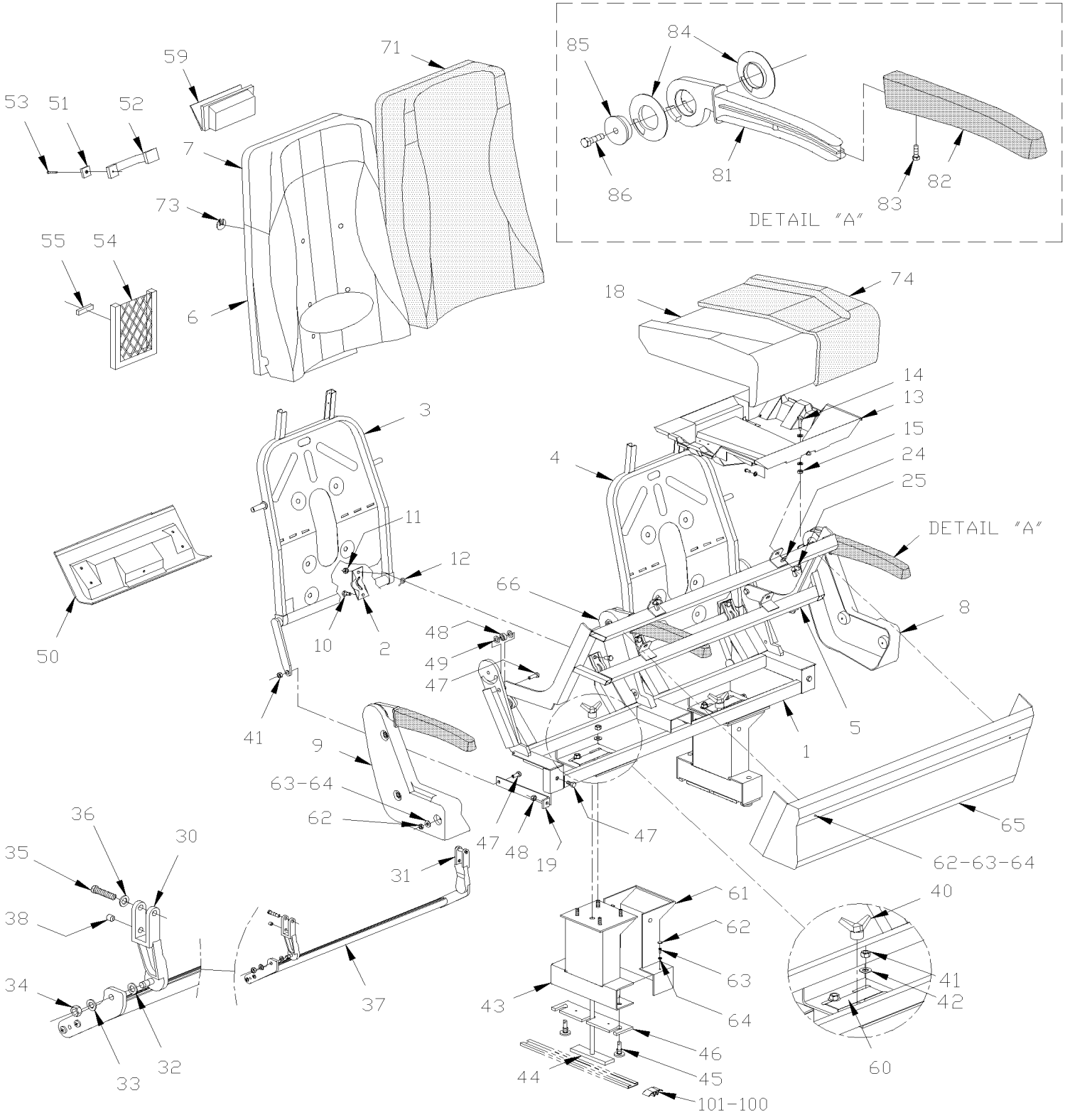

		Date:07/2024	PAGE:Y2-1827-70

PASSENGER'S SEAT - "TOURISMO II" - FLIP-UP W/W.C.L.

Item#	Part	Description	XLII 45	XLII MTH40	XLII MTH45	XLII MTH45E	NOTES
	363376P	SEAT ASSY "FLIP-UP" ULTRA	1				
1	363302	. MOUNTING BASE ASSY / "FLIP-UP" SEAT	1				
2	363246	. COLLAR	4				
3	363180	. BACKREST R.H.	1				
4	363181	. BACKREST L.H.	1				
5	363303	. SEAT FRAME ASSY / SEATREST "FLIP-UP" SEAT	1				
NS	363538	. ROD RETAINING SEATREST	1				
6	363178P	. FOAM ASSY, BACKREST / "TOURISMO II "	1				
6	363186	. . FOAM BACKREST THICK	1				
6	363252	. . FOAM BACKREST THIN W/42"	1				
6	363350	. . FOAM BACKREST THIN W/40"	1				
7	363251	. FOAM ASSY, HEADREST 42" HIGHT / "ULTRA"	1				
NS	500583	. SCREW TP PAN PH #6x1/2 Z050	4				
NS	500240	. WASHER LO EXT .195x.410x.025 Z050	4				
8	363226	. COVER R.H. / PLASTIC	1				
9	363227	. COVER L.H. / PLASTIC	1				
10	5001336	. SCREW CAP HEXF SERR 5/16-18x3/4 Z050	8				
11	5001113	. NUT HEX JAM NYRT 5/16-18	8				
12	363273	. SPRING EYE	4				
13	Call order desk	. STRUCTURE ASSY REAR / 5 PASSENGERS	1				P
14	362353	. SCREW	1				
15	500685	. NUT HEX NYRT 5/16-18 SS	1				
18	362666	. FOAM ASSY, SEATREST / "TOURISMO & ULTRA"	1				
19	363279	. FLAT BAR / ANGLE 198MM x 28MM	2				
24	500441	. WASHER FL .312x.734x.065 Z050	2				
25	500782	. NUT WING 5/16-18 Z050	2				
30	363437	. BRACKET L.H.	1				
31	363436	. BRACKET R.H.	1				
32	502723	. WASHER FL .386x.750x.050 NYL	2				
33	500441	. WASHER FL .312x.734x.065 Z050	2				
34	500777	. NUT HEX STO 5/16-18 Z050	2				
35	500183	. SCREW CAP HEX 5/16-18x1 1/2 G5 PT Z050	2				
36	500476	. WASHER LO SPT .317x.586x.078 Z050	2				
37	363304	. FOOTREST ASSY / DOUBLE SEAT W/FLIP-UP SEAT	1				
38	502781	. SCREW SET HEXS CUP 5/16-18x1/4	2				
40	860874	. HANDLE NUT 3/8-16	2				
41	500777	. NUT HEX STO 5/16-18 Z050	7				
42	502510	. WASHER FL .375x.875x.083	1				
43	363292	. PEDESTAL	2				
44	363278	. "T" BOLT RETAINER 3/8-16 X 10 5/8"	2				
45	363280	. GUIDE 28MM O.D. / M10 - 1.5	4				
46	363281	. SLIDING TRACK / 60MM x 240MM PLASTIC	2				

		Date:07/2024	PAGE:Y2-1827-70

PASSENGER'S SEAT - "TOURISMO II" - FLIP-UP W/W.C.L.

Item#	Part	Description	XLII 45	XLII MTH40	XLII MTH45	XLII MTH45E	NOTES
47	500179	. SCREW CAP HEX 5/16-18x3/4 G5 Z050	AR				
48	363460	. SPACER 10MM I.D. x 19MM O.D. X 8.5MM	2				
49	502723	. WASHER FL .386x.750x.050 NYL	4				
50	363311	. FINISHING LOWER R.H.	1				
50	363310	. FINISHING LOWER L.H.	1				
51	860421	. HOOK	1				
52	860422	. HANDLE	1				
NS	505229	. SPACER 3/8 I.D. X 3/8 LG	2				
52	363424	. HANDLE REINFORCEMENT SUPPORT	1				
53	502521	. SCREW TC OV PH #8-32x1 BK	2				
54	860809	. MAGAZINE NET 14" x 7 ¼"	1				
55	500353	. SCREW TP FL PH #8x3/4 BK	4				
59	861277	. ASHTRAY / PLASTIC	1				
60	404094	. DECAL "DOIT ÊTRE VERROUIL…."	2				
60	404093	. DECAL "MUST BE LOCKED…" / ENGLISH	2				
60	405646	. DECAL "MUST BE LOCKED…" / ENGLISH & SPANISH	2				
61	363296	. COVER PEDESTAL / PLASTIC	2				
62	500686	. SCREW TP OV PH #6x1/2 BK	AR				
63	504412	. WASHER RETAINER SNAP CAP #8	AR				
64	504403	. SNAP CAP #8 FINISHING BLACK	AR				
65	323228	. CAP, INTERIOR REAR	1				
66	363229	. COVER CENTER ARMREST / PLASTIC	1				
71	363385P	. COVERING ASSY, BACKREST / S.C.C. W/42" HIGHT	1				
73	362716	. ATTACHMENT / ROUND "W" SHAPE TO FIX COVER	8				
NS	682259	. SEALANT TAPE / CLEAR / 1/32"x1 1/2"x65' / 1795	AR				
74	362736P	. COVERING SEATREST ASSY / S.C.C. / "SILHOUETTE"	1				
81	362939	. ARMREST / LONG	3				
82	363624	. COVERING ARMREST / LONG	3				
83	500686	. SCREW TP OV PH #6x1/2 BK	3				
84	363575	. SPACER PLASTIC / FRICTION DISK	6				
85	363282	. GUIDE ARMREST	1				
86	500182	. SCREW CAP HEX 5/16-18x1 1/4 G5 PT Z050	3				
100	323654	SEAT TRACK COVER 12' / EACH SEAT / W/COVERING FLOOR	AR				
100	323963	SEAT TRACK COVER 8' / EACH SEAT / W/COVERING FLOOR	AR				
101	820027	HANDLE	1				B
101	5001119	SCREW TP BDG PH #8x3/4 SS	1				B
101	502630	WASHER FL .156x.375x.049 Z050	1				B
		B) FIXED ON SEAT TRACK FOR EASIER REMOVABLE					
		P) CALL ORDER DESK FOR SPECIFIC APPLICATION (V.I.N.)					

		Date:07/2024	PAGE:Y2-1828-01
PASSENGER'S SEAT - "TOURISMO II"			

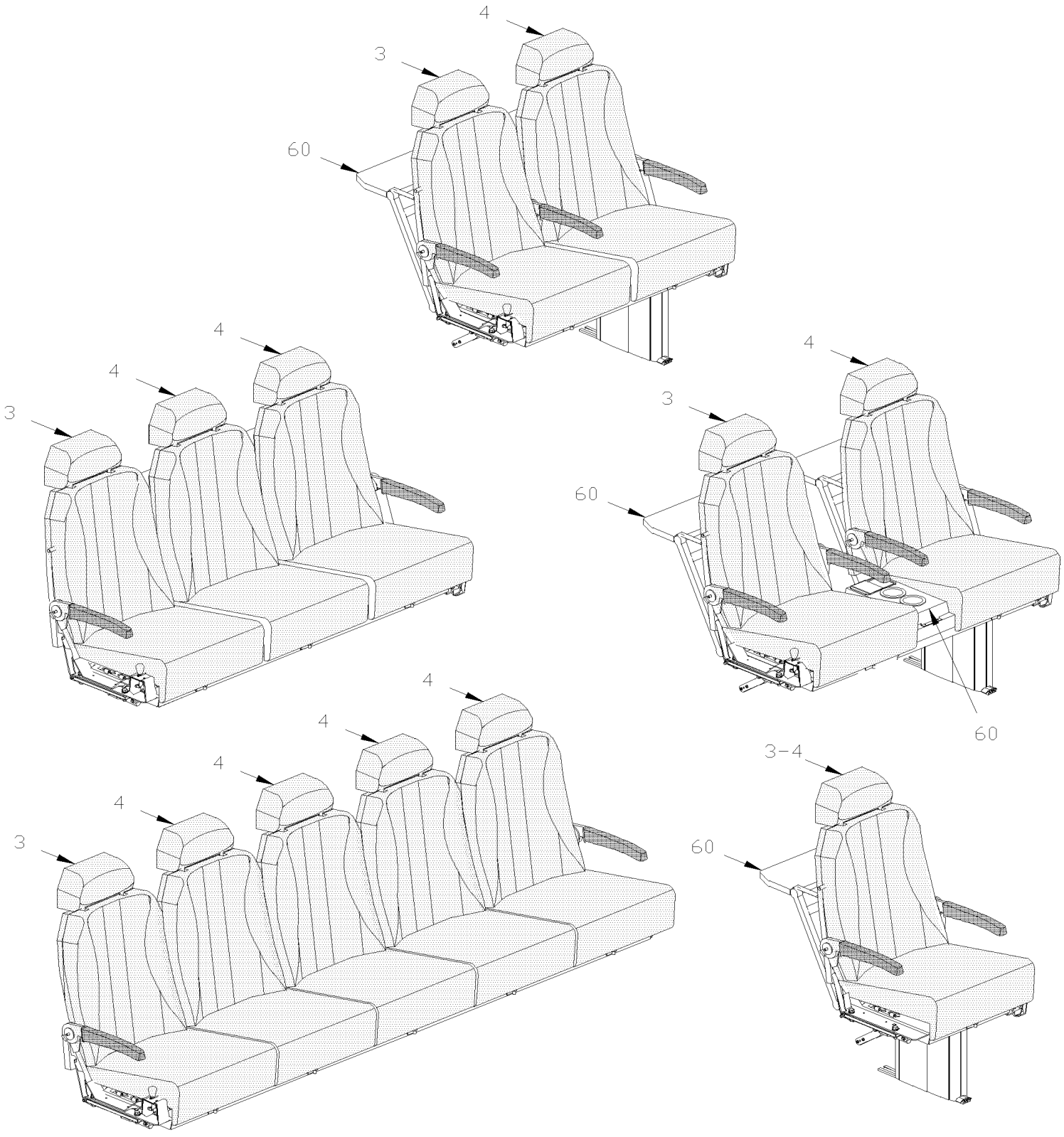

		Date:07/2024	PAGE:Y2-1828-01
PASSENGER'S SEAT - "TOURISMO II"			

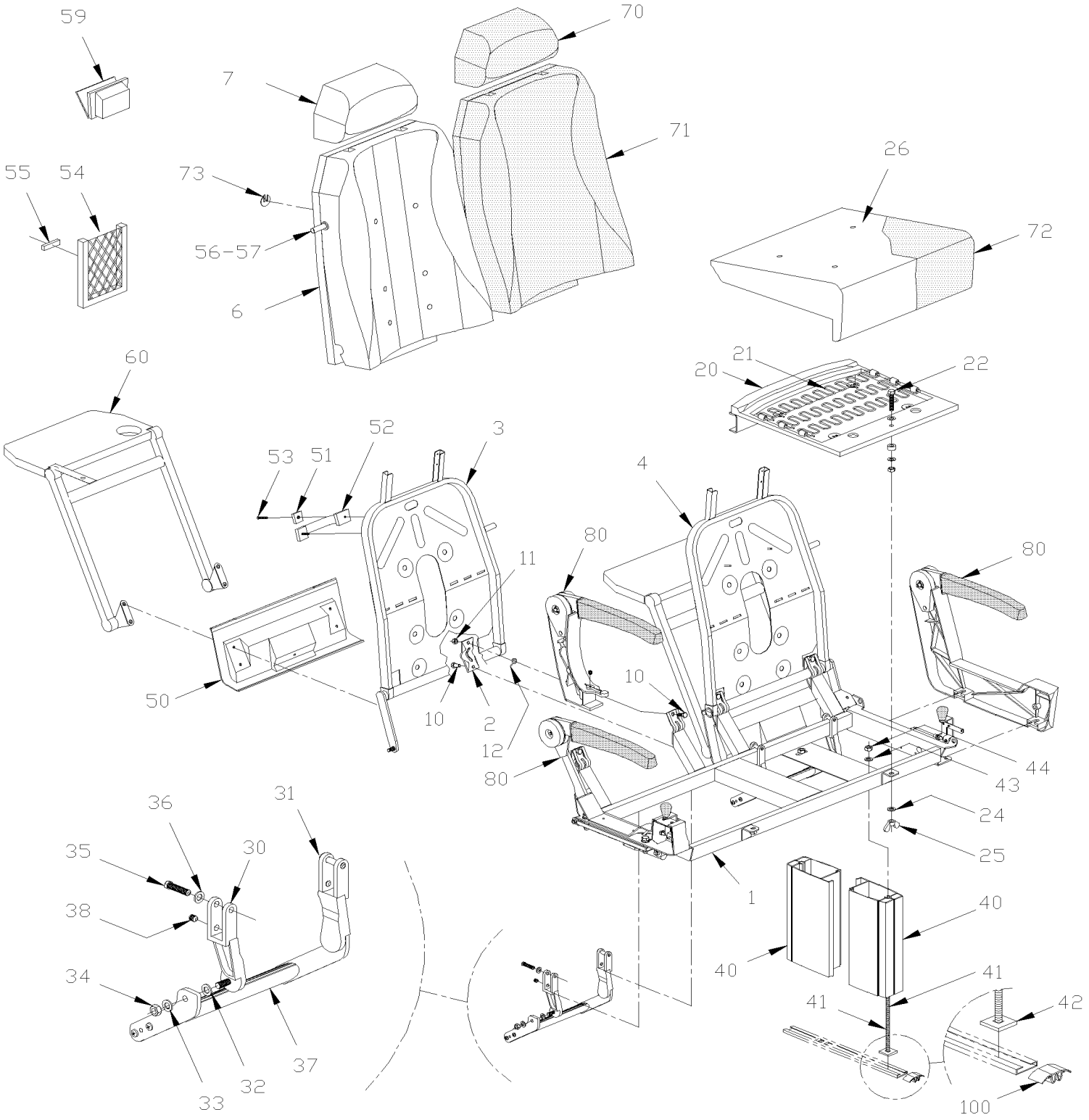

		Date:07/2024	PAGE:Y2-1828-01

PASSENGER'S SEAT - "TOURISMO II"

Item#	Part	Description	XLII 45	XLII MTH40	XLII MTH45	XLII MTH45E	NOTES
	363922	SEAT ASSY R.H. / 2 PASSENGERS / 42" HIGH	AR				
	363921	SEAT ASSY L.H. / 2 PASSENGERS / 42" HIGH	AR				
	363925	SEAT ASSY REAR / 2 PASSENGERS / 42" HIGH	AR				
	363924	SEAT ASSY REAR / 3 PASSENGERS / 42" HIGH	AR				
	363926	SEAT ASSY REAR / 5 PASSENGERS / 42" HIGH	AR				
1	363841	. STRUCTURE ASSY R.H. / 2 PASSENGERS	1				
1	363842	. STRUCTURE ASSY L.H. / 2 PASSENGERS	1				
1	363843	. STRUCTURE ASSY REAR / 3 PASSENGERS	1				
1	363844	. STRUCTURE ASSY REAR / 5 PASSENGERS	1				
1	363838	. STRUCTURE ASSY R.H. / 2 PASSENGERS V.I.P.	1				
1	363839	. STRUCTURE ASSY R.H. V.I.P. / 2 PASSENGERS	1				
1	363837	. STRUCTURE ASSY R.H. V.I.P. / 1 PASSENGERS	1				
1	363840	. STRUCTURE ASSY L.H. V.I.P. / 1 PASSENGERS	1				
2	363246	. COLLAR	1				
3	363834	. BACKREST R.H.	1				
4	363835	. BACKREST L.H.	1				C
6	363178P	. FOAM ASSY, BACKREST / "TOURISMO II "	1				
6	363186	. . FOAM BACKREST THICK	1				
6	363177	. . FOAM BACKREST THIN	1				
6	363174	. . FOAM THIN, OBLONG 4" X 13" APPROX	1				
7	363156	. FOAM ASSY, HEADREST 42" HIGHT / "TOURISMO II "	1				
7	362753	. FOAM ASSY, HEADREST 40" HIGHT / "TOURISMO"	1				
NS	5001312	. SCREW TP TR PH #8x5/8 Z050	4				
10	5001336	. SCREW CAP HEXF SERR 5/16-18x3/4 Z050	4				
11	5001113	. NUT HEX JAM NYRT 5/16-18	4				
12	363273	. SPRING EYE	4				
20	363646	. SEAT FRAME ASSY W/SPRING	1				
21	363650	. . SPRING	3				
22	362353	. . SCREW	1				
23	500685	. NUT HEX NYRT 5/16-18 SS	1				
24	500826	. WASHER LO EXT .320x.610x.034 ZP	1				
25	500782	. NUT WING 5/16-18 Z050	2				B
26	363645	. FOAM	2				
30	363437	. BRACKET L.H.	1				
31	363436	. BRACKET R.H.	1				
32	502723	. WASHER FL .386x.750x.050 NYL	2				
33	500441	. WASHER FL .312x.734x.065 Z050	2				
34	500777	. NUT HEX STO 5/16-18 Z050	2				
35	5001375	. SCREW CAP HEX M10-1.5x18 SS	2				
36	500476	. WASHER LO SPT .317x.586x.078 Z050	2				
37	362928	. FOOTREST ASSY	1				
38	502781	. SCREW SET HEXS CUP 5/16-18x1/4	2				

		Date:07/2024	PAGE:Y2-1828-01

PASSENGER'S SEAT - "TOURISMO II"

Item#	Part	Description	XLII 45	XLII MTH40	XLII MTH45	XLII MTH45E	NOTES
40	363577	. PEDESTAL SQ END / 279MM / 10.98" / 2 PIECES To 5-8631	2				
40	364038	. PEDESTAL SQ END / ONE PIECE / 279MM / 10.98" From 5-8632	1				
NS	364076	. REINFORCEMENT PEDESTAL / ANGLE REAR OF PEDESTAL / 58MMx 20MM From 6-8789	1				
41	5001600	. SCREW CRG 3/8-16x12 G5 Z050	2				
42	363085	. PLATE ANCHOR / CARRIAGE BOLT INSIDE TRACK / 1 1/4" X 1 1/4" To 5-8631	2				
42	360052	. PLATE ANCHOR / CARRIAGE BOLT INSIDE TRACK / 1 1/4" X 3 1/2" From 5-8632	2				
43	500445	. WASHER FL .437x1.000x.083 Z050	2				
44	500265	. NUT HEX STO 3/8-16 Z050	2				
45	363821	. ATTACHMENT PLATE / "J" SHAPE TO FIX SEAT TO WALL TRACK WALL TRACK	1				
. NS	500183	. . SCREW CAP HEX 5/16-18x1 1/2 G5 PT Z050	2				
. NS	500942	. . WASHER LO SPT 8.1x14.8x2.0 N500	2				
45	364132	. ATTACHMENT PLATE / "J" SHAPE TO FIX SEAT TO WALL TRACK WALL TRACK	1				
. NS	500829	. . SCREW CAP HEX M10-1.5x40 G8.8	2				
. NS	500257	. . WASHER LO SPT 10.2x18.1x2.2 Z050	2				
50	362867	. FINISHING LOWER / R.H. / NORYL To Y-7336	1				
50	363947	. FINISHING LOWER / R.H. / NORYL From Y-7337	1				
50	362866	. FINISHING LOWER / L.H. / NORYL To Y-7336	1				
50	363946	. FINISHING LOWER / L.H. / NORYL From Y-7337	1				
51	860421	. HOOK	1				
52	860422	. HANDLE	1				
53	500871	. SCREW TP OV PH #8x1 BK	2				
54	860809	. MAGAZINE NET 14" x 7 ¼"	1				
55	500353	. SCREW TP FL PH #8x3/4 BK	4				
56	5001019	. SCREW TP OV PH #10x2 EMN	1				
56	5001016	. SCREW CAP HEX M10-1.5x90 G8.8 Z050	1				
57	362942	. STOPPER SHORT / W/STANDARD SEAT	1				
57	362943	. STOPPER LONG / WV.I.P. SEAT	1				
59	861277	. ASHTRAY / PLASTIC	1				
NS	502778	. SCREW TP FL PH #6x2 BK	2				
NS	860626	. SUPPORT ASHTRAY / PLASTIC	1				
60	**Y2-1829-00**	**ACCESSORIES PASSENGER'S SEAT - "PREVOST"**					
70	363162P	. COVERING HEADREST 40" ASSY / S.C.C. / "TOURISMO II "	1				
70	363167P	. COVERING HEADREST 42" ASSY / S.C.C. / "TOURISMO II "	1				
71	363172P	. COVERING BACKREST ASSY / S.C.C. / "TOURISMO II "	1				
72	363676	. COVERING SEATREST ASSY / S.C.C. / ALL NEW W/SPRING	1				
73	362716	. ATTACHMENT / ROUND "W" SHAPE TO FIX COVER	8				
80	**Y2-1827-52**	**ARMREST PASSENGER'S SEAT - "PREVOST"**					
100	323654	SEAT TRACK COVER 12' / EACH SEAT / W/COVERING FLOOR	AR				
100	323963	SEAT TRACK COVER 8' / EACH SEAT / W/COVERING FLOOR	AR				
153	502521	. SCREW TC OV PH #8-32x1 BK	2				
158	363644	. HEADREST REINFORCEMENT	1				

		Date:07/2024	PAGE:Y2-1828-01

PASSENGER'S SEAT - "TOURISMO II"

Item#	Part	Description	XLII 45	XLII MTH40	XLII MTH45	XLII MTH45E	NOTES
		B) TO FIX SEAT					
		C) QTY OF 2 WITH 3 PASSENGERS REAR SEAT AND QTY OF 4 WITH 5 PASSENGERS REAR SEAT					

		Date:07/2024	PAGE:Y2-1828-05
PASSENGER'S SEAT - "MULTINA"			

PASSENGER'S SEAT 2 SEATING

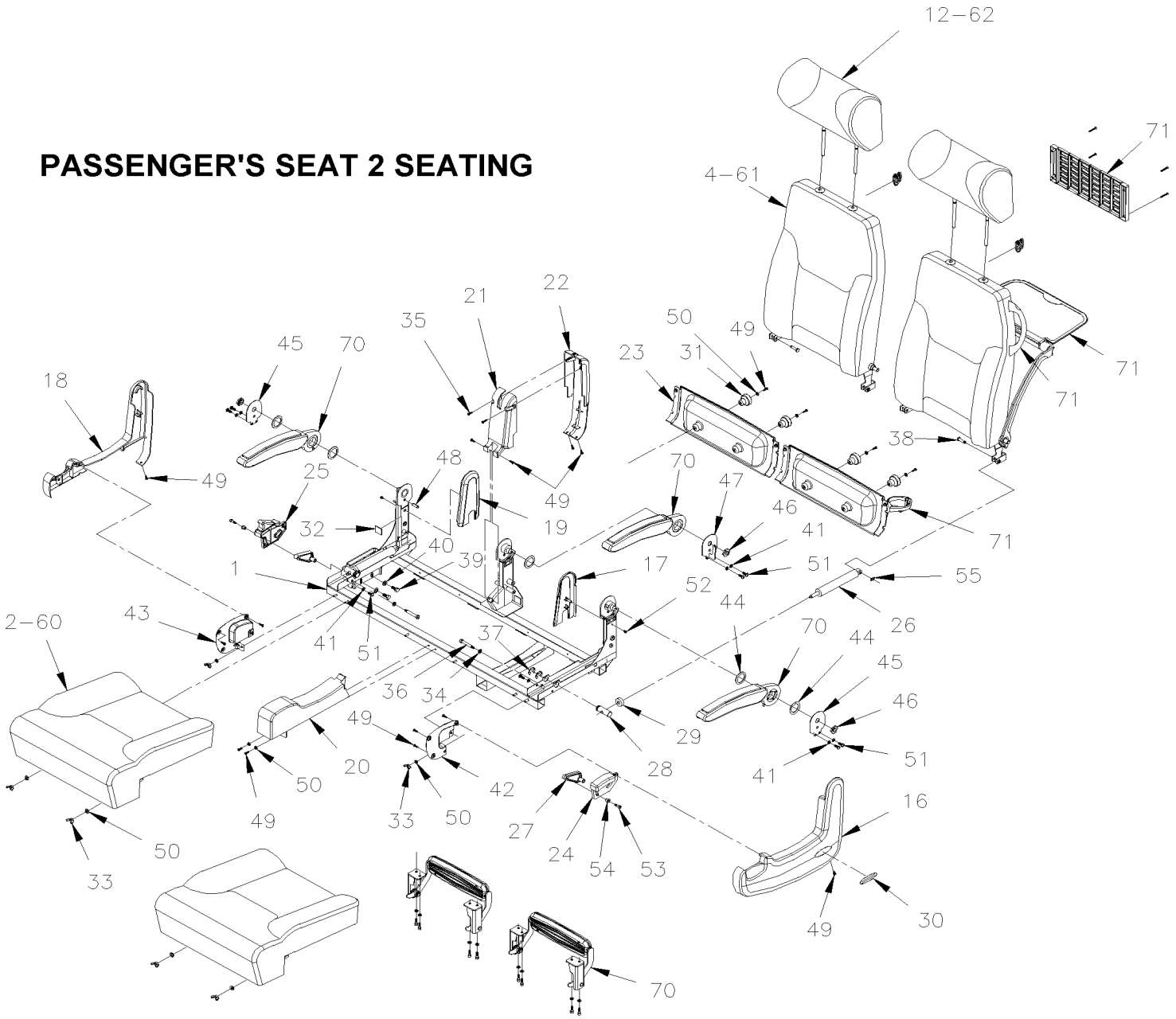

		Date:07/2024	PAGE:Y2-1828-05
PASSENGER'S SEAT - "MULTINA"			

PASSENGER'S SEAT 3 SEATING

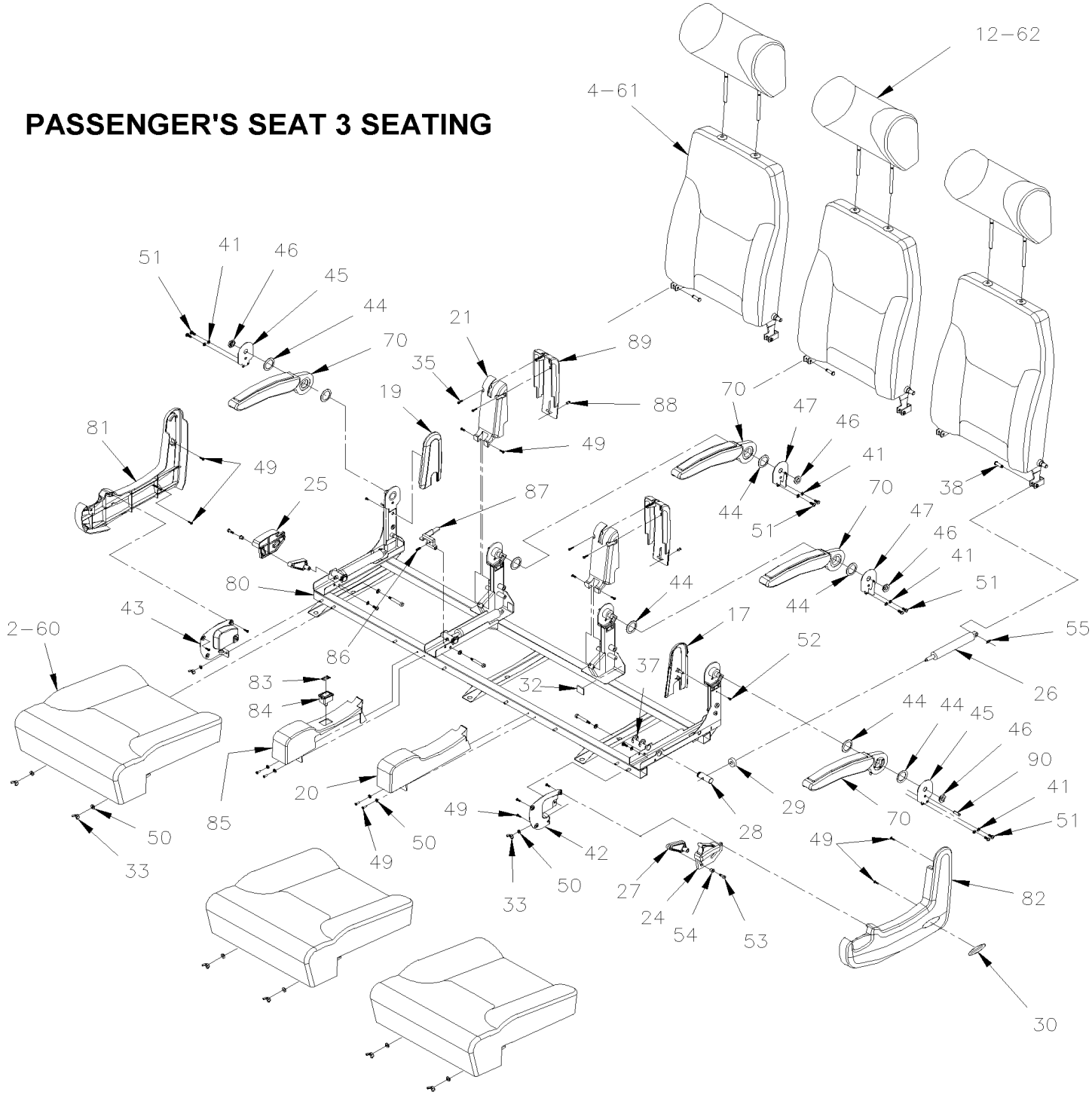

		Date:07/2024	PAGE:Y2-1828-05
PASSENGER'S SEAT - "MULTINA"			

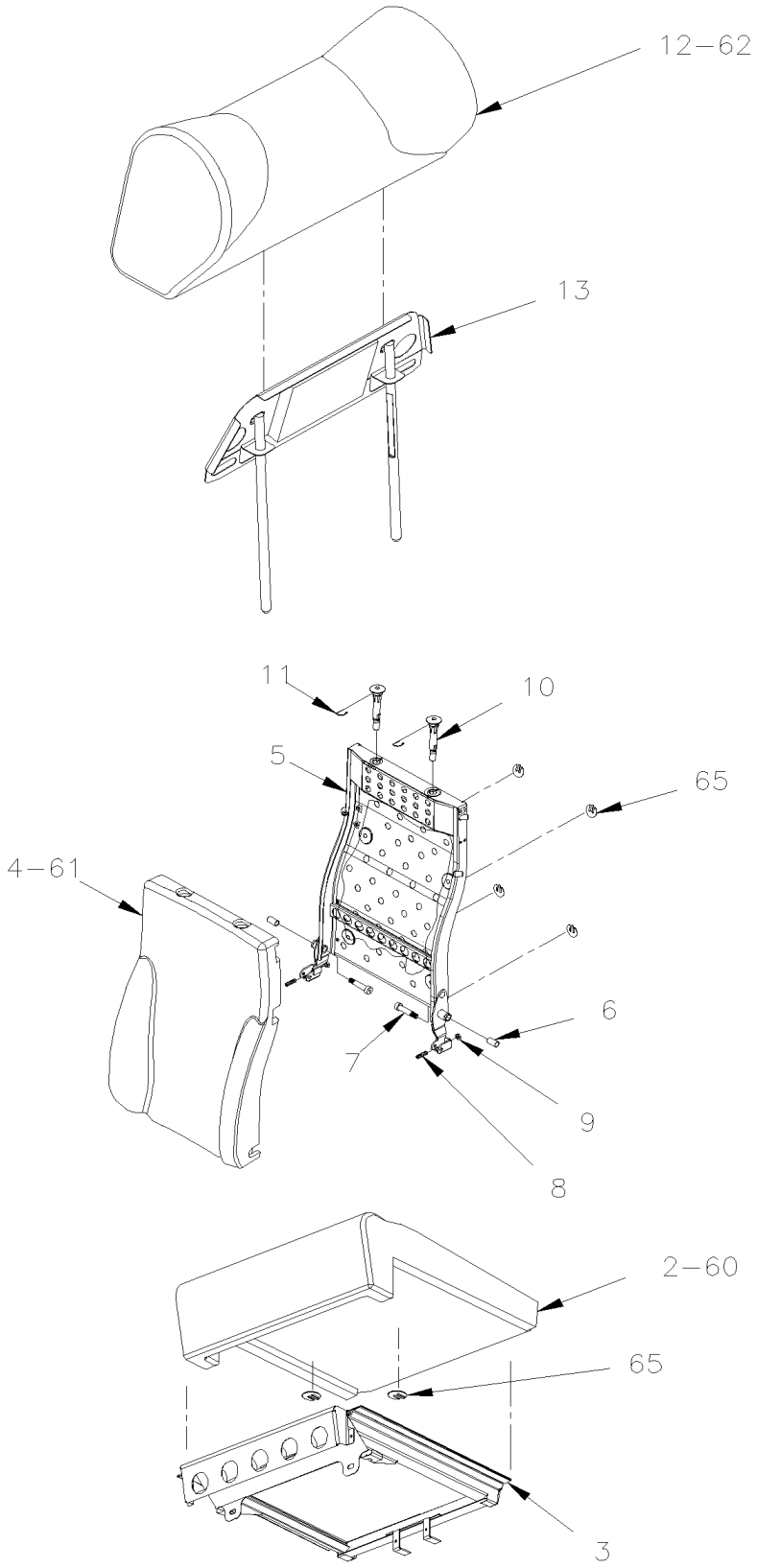

		Date:07/2024	PAGE:Y2-1828-05

PASSENGER'S SEAT - "MULTINA"

Item#	Part	Description	XLII 45	XLII MTH40	XLII MTH45	XLII MTH45E	NOTES
	Call order desk	TWO-PASSENGER,S RIGHT HAND / ALLEGRO SEAT	1				P
	Call order desk	TWO-PASSENGER,S LEFT HAND / ALLEGRO SEAT	1				P
	Call order desk	THREE PASSENGER'S SEAT ASSY / ALLEGRO SEAT	1				P
1	Call order desk	. SEAT FRAME, TWO-PASSENGER, RIGHT-HAND	1				P
1	Call order desk	. SEAT FRAME, TWO-PASSENGER, LEFT-HAND	1				P
2	Call order desk	. BOTTOM CUSHION	2				P
2	Call order desk	. . PAN, BOTTOM CUSHION	1				P
3		. . FOAM CUSHION	1				
4	Call order desk	. BACKREST CUSHION	2				P
4	Call order desk	. . FOAM, BACKREST	1				P
5	Call order desk	. . PAN, BACKREST	1				P
6	Call order desk	. . BEARING, PLSTC, 12" ID x 14" OD x 25"	2				P
7	Call order desk	. . SCREW SHR HEXS 12x40 {M10-1.5	2				P
8	Call order desk	. . SCREW SET HEXS FP M8-1.25x30 M8-1.25x30	2				P
9	Call order desk	. . NUT HEX THN M8-1.25x4.0 ZP	2				P
10	Call order desk	. . SLIDING GUIDE, HEADREST	2				P
11	Call order desk	. . HITCH PIN CLIP, SLIDING GUIDE	2				P
12	Call order desk	. HEADREST CUSHION, V.I.P.	1				P
12		. . CUSHION HEADREST	1				
13		. . SUPPORT HEADREST	1				
16	Call order desk	. SHROUD, AISLE SIDE, LEFT-HAND	1				P
16	Call order desk	. SHROUD, AISLE SIDE, RIGHT-HAND	1				P
17	Call order desk	. SHROUD, INSIDE, LEFT-HAND	1				P
18	Call order desk	. SHROUD, WALL SIDE, RIGHT-HAND	1				P
18	Call order desk	. SHROUD, WALL SIDE, LEFT-HAND	1				P
19	Call order desk	. SHROUD, INSIDE, RIGHT-HAND	1				P
20	Call order desk	. SHROUD, CENTER FRONT	1				P
21	Call order desk	. SHROUD, CENTER UPPER	1				P
22	Call order desk	. SHROUD, CENTER REAR	1				P
23	Call order desk	. SHROUD, FOOTREST	1				P
24	863901	. RECLINING HANDLE, AISLE SIDE, LEFT-HAND	1				
24	863273	. RECLINING HANDLE, AISLE SIDE, RIGHT-HAND	1				
25	Call order desk	. RECLINING HANDLE, WALL SIDE, RIGHT-HAND	1				P
25	Call order desk	. RECLINING HANDLE, WALL SIDE, LEFT-HAND	1				P
26	862843	. RECLINING GAZ CYLINDER	2				
27	863185	. RECLINING LEVER	1				
28	Call order desk	. PIVOT CYLINDER	2				P
29	Call order desk	. CYLINDER STOPPER	2				P
30	Call order desk	. MULTINA LABEL	1				P
31	863183	. FOOTREST BUMPER	1				
32	Call order desk	. BACKREST STOPPER	4				P
33	Call order desk	. NUT WING M6-1.0 ZP	6				P

		Date:07/2024	PAGE:Y2-1828-05

PASSENGER'S SEAT - "MULTINA"

Item#	Part	Description	XLII 45	XLII MTH40	XLII MTH45	XLII MTH45E	NOTES
34	Call order desk	. WASHER LO SPT 8.1 ZP	2				P
35	Call order desk	. SCREW TA PAN PH #6x3/4 ZP	2				P
36	Call order desk	. SCREW SHR HEXS 8x45{M6-1.0x11	2				P
37	Call order desk	. RING, RTNG, EXTL, STL, ZN PLD, SHAFT DIA 3/	4				P
38	Call order desk	. PIN, CLEVIS, CUSTOM	2				P
39	Call order desk	. SCREW CAP HEX M8x20 G8.8	2				P
40	Call order desk	. WASHER LO SPT .385 ZP	2				P
41	Call order desk	. WASHER LO SPT 6.1 ZP	8				P
42	Call order desk	. SHROUD PLATE, LEFT-HAND	1				P
43	Call order desk	. SHROUD PLATE, RIGHT-HAND	1				P
44	Call order desk	. WASHER FL 33x45.9 NYL	6				P
45	Call order desk	. COVER PLATE	2				P
46	Call order desk	. NUT HEX M16-1.5 ZP	3				P
47	Call order desk	. CENTRAL COVER PLATE	1				P
48	Call order desk	. PIN, SPR TNSN, STL, ZN PLD, 5/16 " NOM DIA	1				P
49	Call order desk	. SCREW TA PAN PN #8x5/8 ZP	18				P
50	Call order desk	. WASHER FL 6.4x12x1.6 ZP	13				P
51	Call order desk	. SCREW MA PAN PH M6-1.0x16 ZP	8				P
52	Call order desk	. SCREW TA PAN PH #8x3/8 ZP	2				P
53	863208	. SCREW SHR HEXS 6x10{M5-0.8x9.5	2				
54	863209	. BEARING FLANGE 0.252" ID x 0.377" OD BR	2				
55	Call order desk	. CLIP, HAIR PIN, STL, ZN, 0.062" WR DIA x 11	2				P
60	862848	. COVERING ASSY, SEATREST / S.C.C.	1				
61	862849	. COVERING ASSY, BACKREST / S.C.C.	1				
62	862850	. COVERING ASSY, HEADREST / S.C.C.	1				
65	362716	. ATTACHMENT / ROUND "W" SHAPE TO FIX COVER	AR				
70	**Y2-1828-50**	**. ARMREST PASSENGER'S SEAT- "MULTINA"**					
71	**Y2-1828-60**	**. ACCESSORIES PASSENGER'S SEAT - "MULTINA"**					
80	Call order desk	. SEAT FRAME, THREE-PASSENGER	1				P
81	Call order desk	. SHROUD, AISLE SIDE, THREE-PASSENGER, RIGHT-	1				P
82	Call order desk	. SHROUD, AISLE SIDE, THREE-PASSENGER, LEFT-H	1				P
83	Call order desk	. RECLINING LABEL	1				P
84	864792	. RECLINING BUTTON KIT THREE PASSENGER KIT WITH DECAL ABOBE	1				
85	Call order desk	. SHROUD, CENTER FRONT, RECLINING BUTTON	1				P
86	Call order desk	. SCREW SET HEXS FP M6-1.0x16 M6-1.0x16	1				P
87	Call order desk	. RECLINING LEVER, THREE-PASSENGER	1				P
88	Call order desk	. RIVET, POP, DOME HD, OE, ALU, 5/32 IN DIA X 504109	2				P
89	Call order desk	. SHROUD, CENTER UPPER, REAR	2				P
90	Call order desk	. PIN, SPR TNSN, STL, ZN PLD, 5/16 " NOM DIA	1				P

		Date:07/2024	PAGE:Y2-1828-05

PASSENGER'S SEAT - "MULTINA"

Item#	Part	Description	XLII 45	XLII MTH40	XLII MTH45	XLII MTH45E	NOTES
		P) CALL ORDER DESK FOR SPECIFIC APPLICATION (V.I.N.)					

		Date:07/2024	PAGE:Y2-1828-10
PASSENGER'S SEAT - "MULTINA"			

ROTATING SEAT 2 SEATING

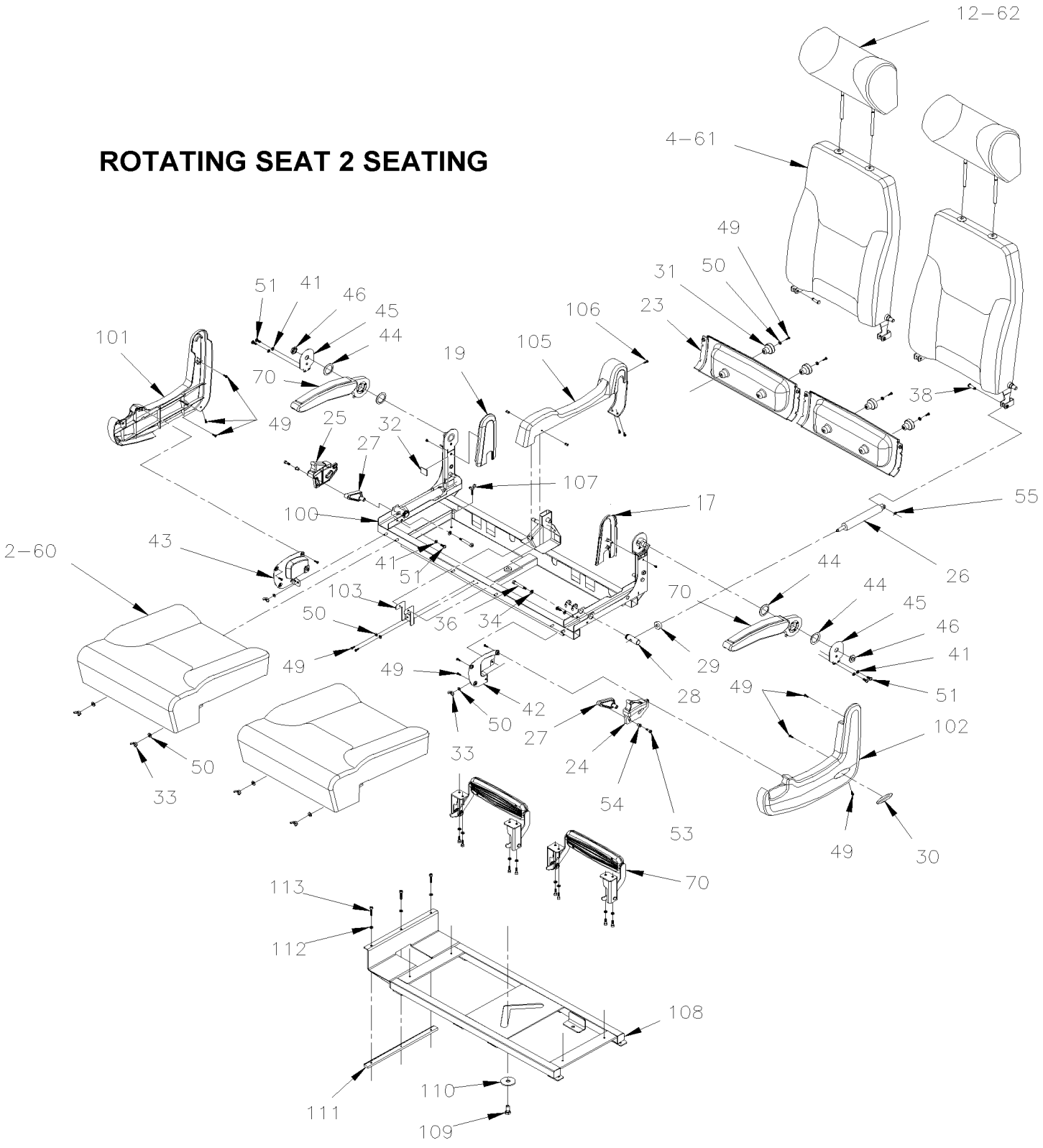

		Date:07/2024	PAGE:Y2-1828-10

PASSENGER'S SEAT - "MULTINA"

Item#	Part	Description	XLII 45	XLII MTH40	XLII MTH45	XLII MTH45E	NOTES
		"NOTE" - "NOTE" - "NOTE" - "NOTE" - "NOTE"					
		FOR ALLS OTHERS PARTS SEE PAGE Y2-1828-05					
	Y2-1828-05	**PASSENGER'S SEAT - "MULTINA"**					
	Call order desk	TWO-PASSENGER ALLEGRO SWIVEL SEAT	AR				P
49	Call order desk	. SCREW TA PAN PN #8x5/8 ZP	1				P
50	Call order desk	. WASHER FL 6.4x12x1.6 ZP	1				P
70	**Y2-1828-50**	**. ARMREST PASSENGER'S SEAT- "MULTINA"**					
100	Call order desk	. SEAT FRAME, TWO-PASSENGER, SWIVEL	1				P
101	Call order desk	. SHROUD, AISLE SIDE, SWIVEL, RIGHT-HAND	1				P
102	Call order desk	. SHROUD, AISLE SIDE, SWIVEL, LEFT-HAND	1				P
103	Call order desk	. SUPPORT, SWIVEL CENTER SHROUD	1				P
104	Call order desk	. RIVET, POP, DOME HD, OE, ALU, 5/32 IN DIA X 504109	2				P
105	Call order desk	. SHROUD, SWIVEL CENTER	1				P
106	Call order desk	. SCREW TA PAN PH #8x1.00 ZP	1				P
107	Call order desk	. SCREW WI M6x16 ZP	4				P
108	Call order desk	. BASE FRAME, SWIVEL	1				P
109	Call order desk	. SCREW CAP HEXS M12x25 ZP	1				P
110	Call order desk	. WASHER FL .531x2.000x.150 ZP	1				P
111	Call order desk	. WALL BRACKET, BOTTOM	1				P
112	Call order desk	. WASHER LO SPT 6.1 ZP	15				P
113	Call order desk	. SCREW MA HEXS M6-1.0x30 ZP	3				P
		P) CALL ORDER DESK FOR SPECIFIC APPLICATION (V.I.N.)					

		Date:07/2024	PAGE:Y2-1828-50
ARMREST PASSENGER'S SEAT- "MULTINA"			

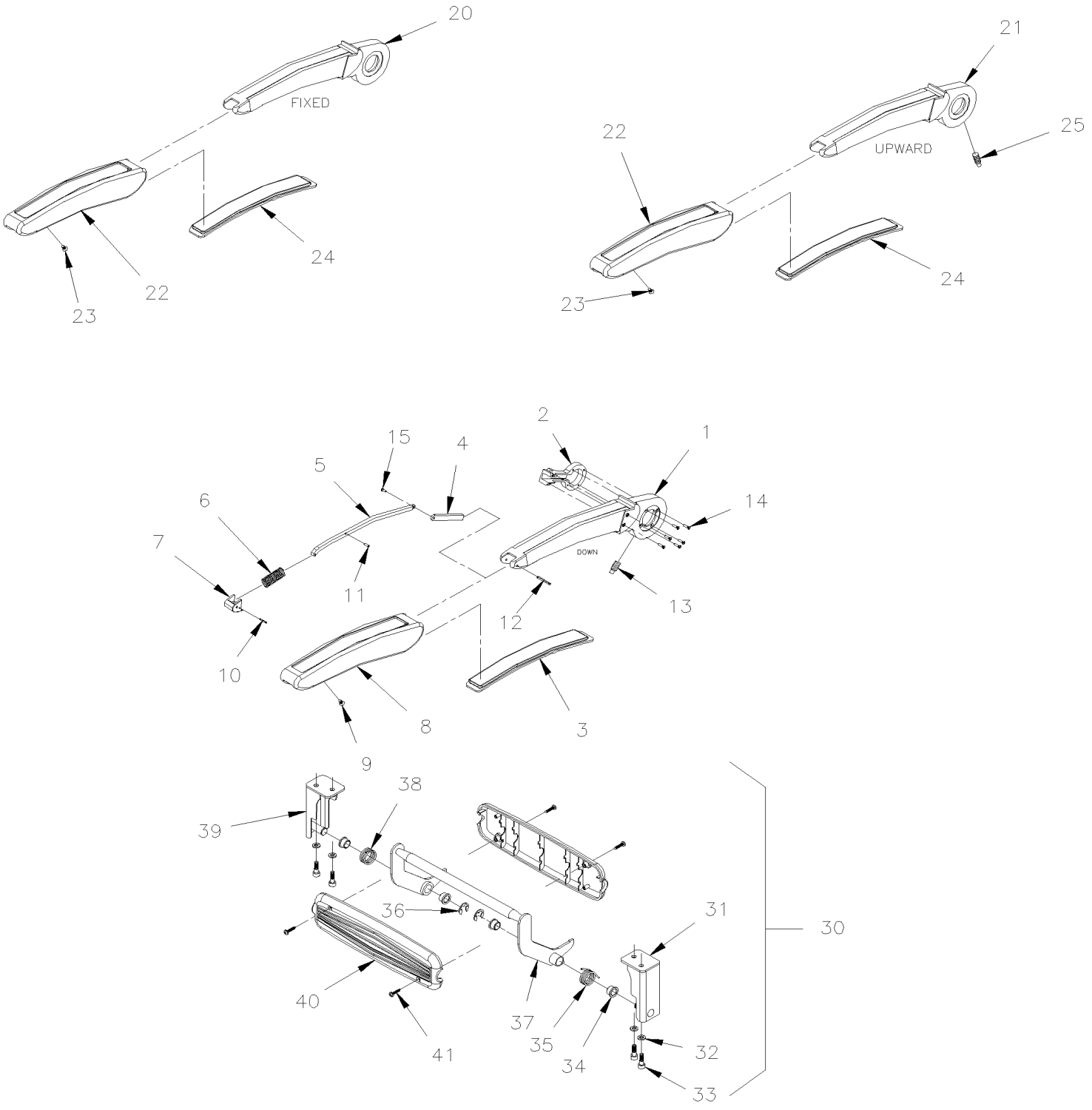

		Date:07/2024	PAGE:Y2-1828-50

ARMREST PASSENGER'S SEAT- "MULTINA"

Item#	Part	Description	XLII 45	XLII MTH40	XLII MTH45	XLII MTH45E	NOTES
	862845	ARMREST ASSY, DOWNWARD	1				
1	Call order desk	. ARMREST FRAME, DOWNWARD	1				P
2	Call order desk	. ARMREST STOPPER	1				P
3	Call order desk	. ARMREST FOAM INSERT	1				P
4	Call order desk	. ARMREST LOCKING REAR PART	1				P
5	Call order desk	. RECLINING BUTTON LINK	1				P
6	Call order desk	. SPRING, COMP, .600 O.D. x 1.5 x .045	1				P
7	863211	. ARMREST BUTTON	1				
8	Call order desk	. COVER, OPEN ARMREST	1				P
9	Call order desk	. SCREW TP FL PH #8x1/2 ZP	1				P
10	Call order desk	. PIN, SPR TNSN, STL, ZN, 3/32" NOM DIA X 9/1	1				P
11	Call order desk	. PIN, SPR TNSN, CS, ZN, 1/8" NOM DIA X 7/8"	1				P
12	Call order desk	. PIN, SPR TNSN, STL, ZN, 1/8" NOM DIA X 1 1/	1				P
13	Call order desk	. ARMREST PIN STOPPER	1				P
14	Call order desk	. SCREW MA FL PH M3-0.5x12 ZP	6				P
15	Call order desk	. RIVET, SOLID,FLH,SST, 0.125" X 0.375" LG	1				P
20	862847	ARMREST ASSY, FIXED	1				
21	862846	ARMREST ASSY, UPWARD	1				
22	863182	. COVER, ARMREST	1				
23	Call order desk	. SCREW TP FL PH #8x1/2 ZP	1				P
24	Call order desk	. ARMREST FOAM INSERT	1				P
25	Call order desk	. ARMREST PIN STOPPER	1				P
30	Call order desk	FOOTREST ASSEMBLY	1				P
30	Call order desk	FOOTREST ASSEMBLY, W/ROTATING SEAT	1				P
31	Call order desk	. FOOTREST BRACKET, L.H.	1				P
31	Call order desk	. FOOTREST BRACKET, L.H. W/ROTATING SEAT	1				P
32	Call order desk	. WASHER LO SPT 6.1 ZP	4				P
33	Call order desk	. SCREW CAP HEXS SS M6x18 M6 SS	4				P
34	Call order desk	. BEARING, FL PLSTC, 7/16" ID x 9/16" OD x 3/	2				P
35	Call order desk	. TORSION SPRING, L.H.	1				P
36	Call order desk	. RING, RTNG, EXTL '"E" STYLE, STL ZN PLD, SH	2				P
37	Call order desk	. FOOTREST SHAFT ASSEMBLY	1				P
38	Call order desk	. TORSION SPRING, R.H.	1				P
39	Call order desk	. FOOTREST BRACKET, R.H.	1				P
39	Call order desk	. FOOTREST BRACKET, R.H. W/ROTATING SEAT	1				P
40	863391	. FOOTREST PLASTIC CAP	2				
41	Call order desk	. SCREW TA PAN PH #6x3/4 ZP	4				P

		Date:07/2024	PAGE:Y2-1828-50

ARMREST PASSENGER'S SEAT- "MULTINA"

Item#	Part	Description	XLII 45	XLII MTH40	XLII MTH45	XLII MTH45E	NOTES
		P) CALL ORDER DESK FOR SPECIFIC APPLICATION (V.I.N.)					

		Date:07/2024	PAGE:Y2-1828-60
ACCESSORIES PASSENGER'S SEAT - "MULTINA"			

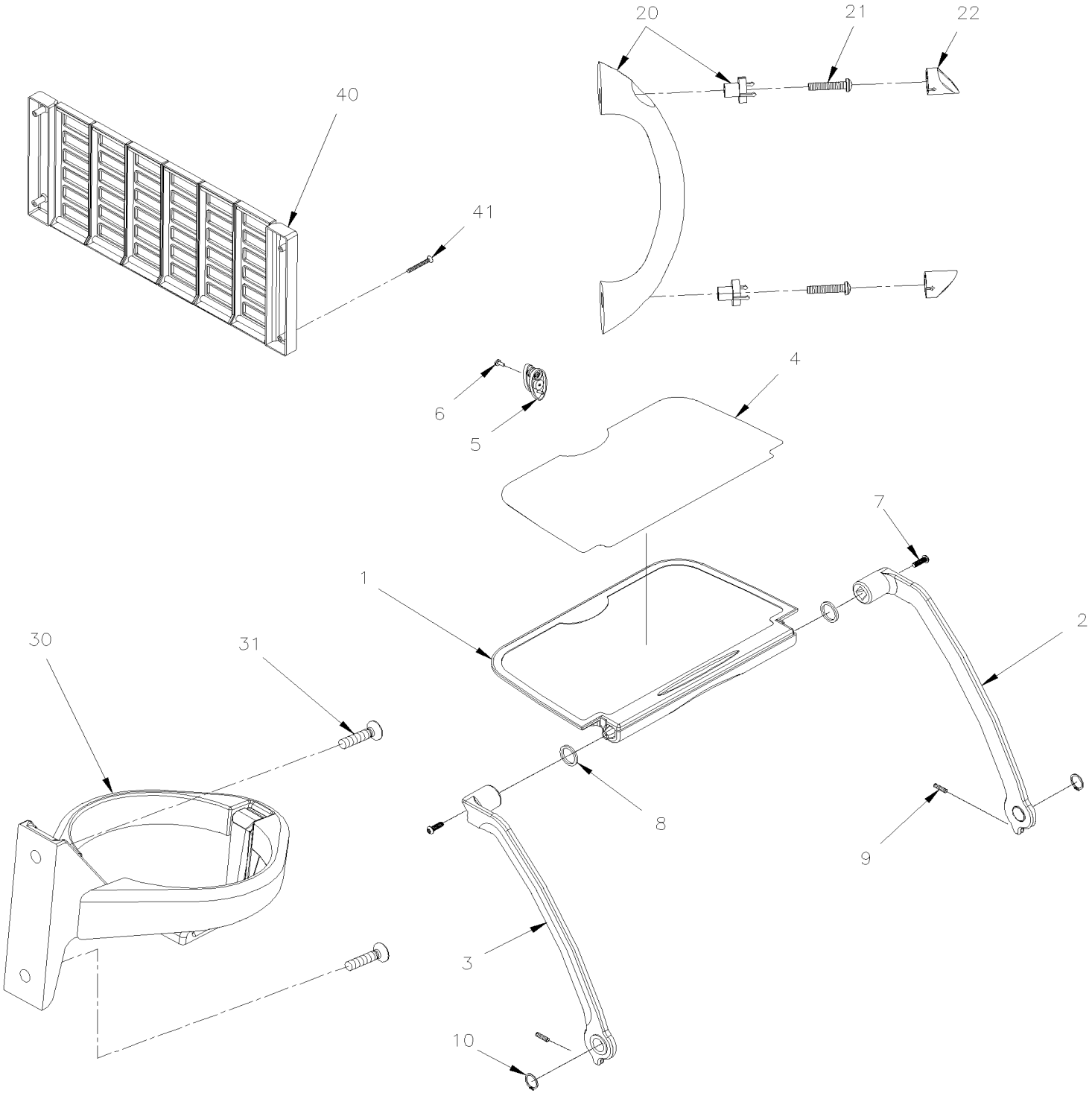

		Date:07/2024	PAGE:Y2-1828-60

ACCESSORIES PASSENGER'S SEAT - "MULTINA"

Item#	Part	Description	XLII 45	XLII MTH40	XLII MTH45	XLII MTH45E	NOTES
	862841	TRAY TABLE, AIRCRAFT STYLE	1				
1	Call order desk	. TRAY TABLE ASSY	1				P
2	Call order desk	. TRAY TABLE ARM, LEFT-HAND	1				P
3	Call order desk	. TRAY TABLE ARM, RIGHT-HAND	1				P
4	Call order desk	. NONE-SLIP BASE	1				P
5	863210	. LATCH, TRAY TABLE	1				
6	Call order desk	. SCREW MA PAN PH M3.5-0.6x10 ZP	1				P
7	Call order desk	. SCREW CAP BUT HEXS M6x20 SS	2				P
8	Call order desk	. VELCRO RING WITH ADHESIVE	2				P
9	Call order desk	. SCREW SET HEXS FP M5x0.8x20 M5x0.8x20	2				P
10	Call order desk	. RING, RTNG, EXTL, SPR CS, SHAFT DIA 3/4" x	2				P
20	Call order desk	GRAB HANDLE LATERAL KIT	1				P
20	Call order desk	. GRAB HANDLE , RUSPA TORINO SOFT TOUCH, BLAC	1				P
21	Call order desk	. SCREW MA PAN PH M5-0.8x25 ZP	2				P
22	Call order desk	. SCREW BUT BK	2				P
		. CHAR(255)					
30	862844	CUP HOLDER, RUSPA, BLACK	1				
30	863181	. CUP HOLDER, RUSPA, BLACK	1				
31	863430	SCREW MA PAN PH M3.5-0.6x10 ZP	2				
		. CHAR(255)					
40	862842	MAGAZINE RACK / PLASTIC 350MM x 145MM = BLACK 6 BARS	1				
40	Call order desk	. MAGAZINE NET, RUSPA, BLACK	1				P
41	863430	SCREW MA PAN PH M3.5-0.6x10 ZP	2				
		P) CALL ORDER DESK FOR SPECIFIC APPLICATION (V.I.N.)					

From Y-7046 To 6-8906		Date:07/2024	PAGE:Y2-1829-00
ACCESSORIES PASSENGER'S SEAT - "PREVOST"			

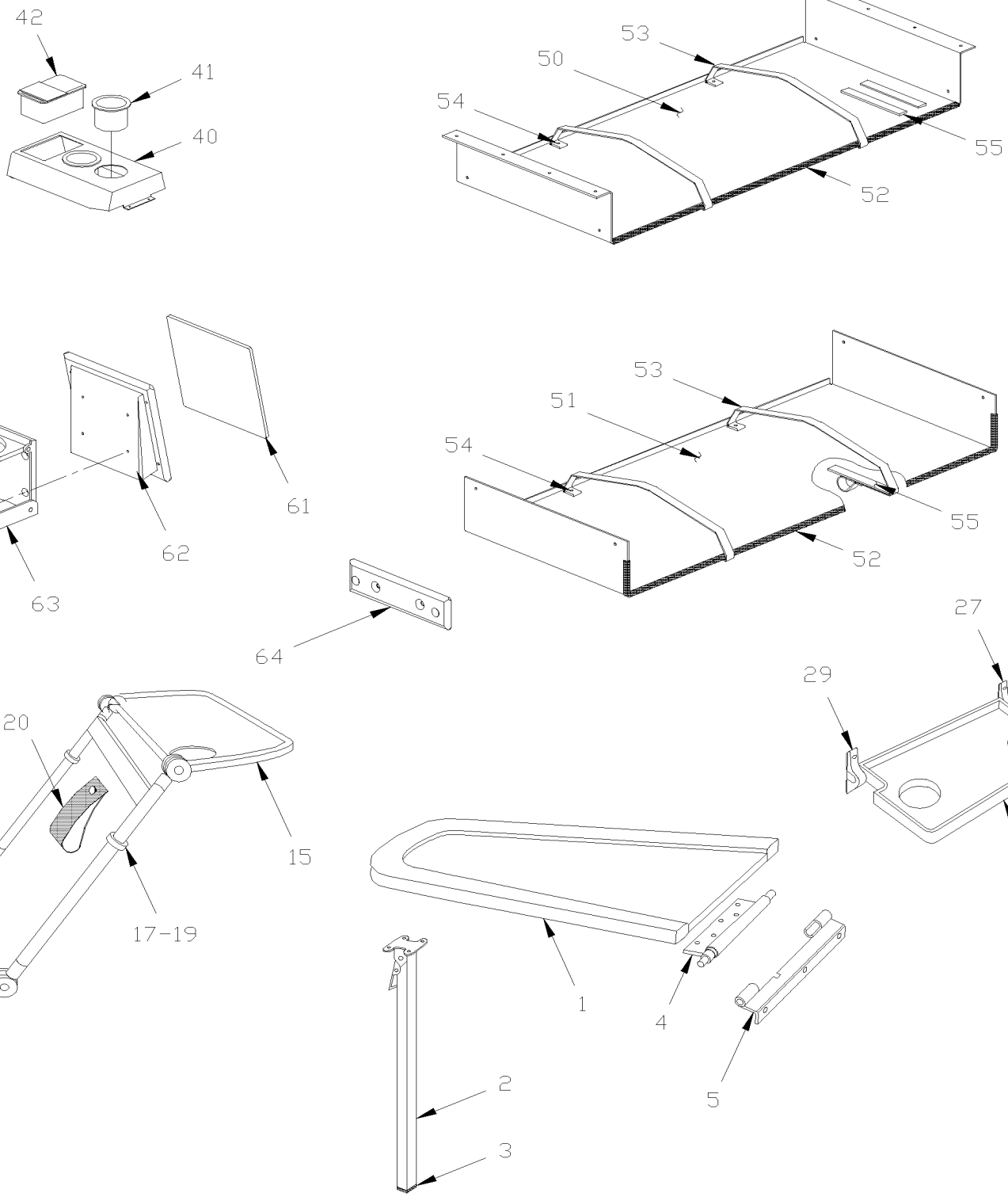

From Y-7046 To 6-8906		Date:07/2024	PAGE:Y2-1829-00

ACCESSORIES PASSENGER'S SEAT - "PREVOST"

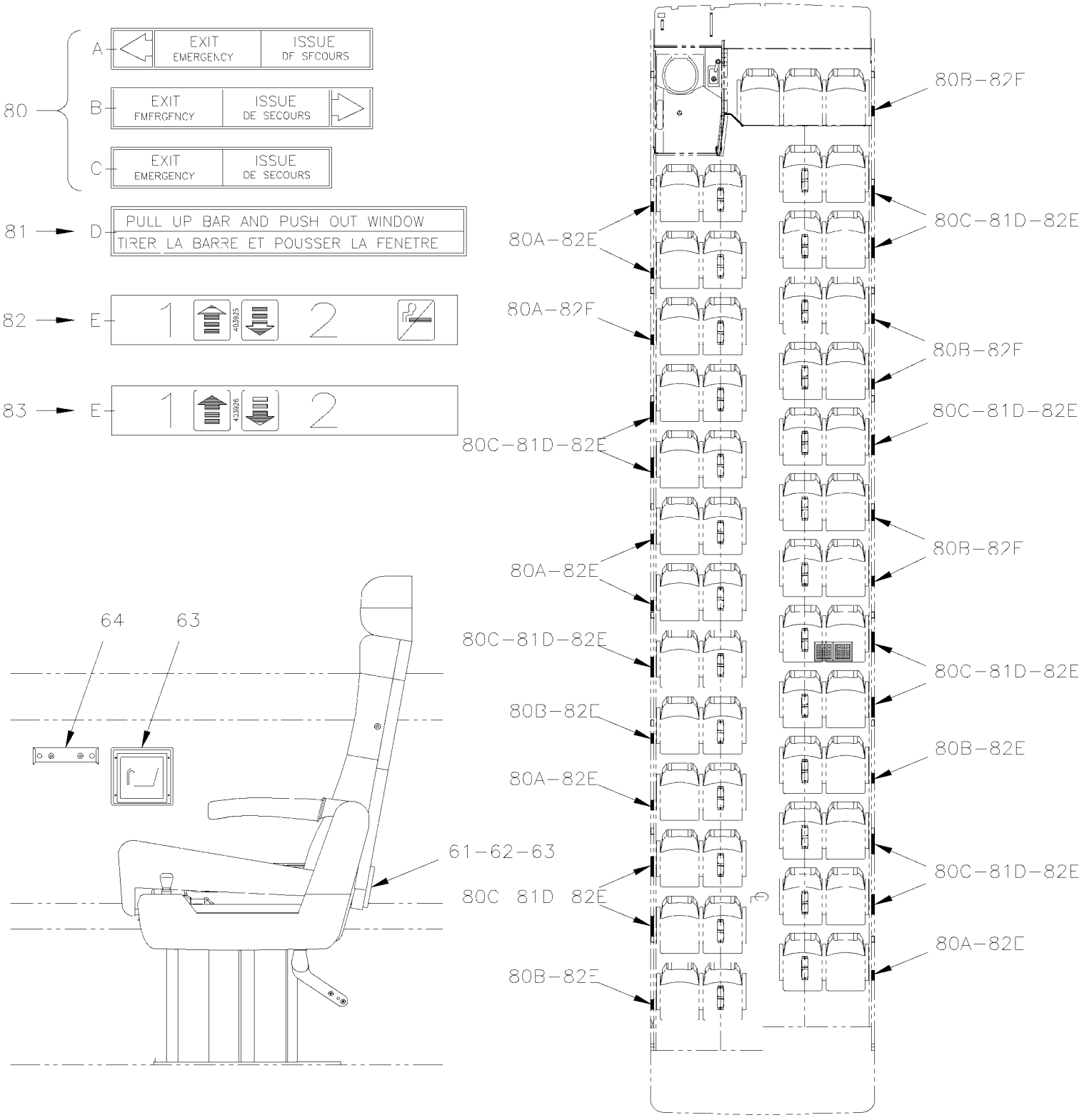

From Y-7046 To 6-8906		Date:07/2024	PAGE:Y2-1829-00

ACCESSORIES PASSENGER'S SEAT - "PREVOST"

Item#	Part	Description	XLII 45	XLII MTH40	XLII MTH45	XLII MTH45E	NOTES
1	362215P	TABLE ASSY / "FORMICA" & LEATHERETTE SPECIFY COLOR	1				
1	Call order desk	TABLE ASSY / "FORMICA" & LEATHERETTE V.I.P. 2 PASSENGER	1				P
1	Call order desk	TABLE ASSY / "FORMICA" & LEATHERETTE V.I.P. 1 PASSENGER	1				P
1	363796	TABLE ASSY / GREY ABS COVERING W/4 GLASS 857MM	1				
. NS	364187	. TABLE TOP ASSY W/OUT HARDWARE	1				
1	363795	. COVERING W/4 GLASS HOLDER / MEDIUM GREY 857MM	1				
2	361432	. LEG (MODIFIED)	1				
2	860333	. . LEG 25 1/8" / 639.8MM	1				
3	860718	. . . GLIDE SQUARE END 1 X 1 X TUBE 13 GA / P	1				
4	360255	. HINGE / TABLE SECTION	1				
. A	360620	. . ROD LOCK	1				
. B	363604	. . SPRING COMPRESSION / .500 O.D. x 6.25 x .062	1				
. C	505221	. . SPRING, PIN 1/8 X 3/8	1				
NS	500841	. SCREW TP PAN PH #14x3/4 Z050	9				
NS	506006	. TAPE RUB ADH1 CC POL 3/8" x 1 1/4" x 20' / GREY 2520	AR				
NS	360325	. DECAL "INSTALLATION OF CARD TABLE...." "BILINGUAL"	1				
5	361658	HINGE / WALL SECTION 1 1/8"x1 5/16" ANGLE	1				
NS	360622	ENVELOPE ASSY TABLE	1				
NS	500136	SCREW MA OV PH 1/4-20x1 1/2 SS EMN	3				
		UTILITY TABLE					
15	363611	TABLE / W/"TOURISMO II" & "ULTRA" / BLACK	1				
15	363423	STRAP / 145MM	1				
15	363464	WASHER RETAINER	1				
15	500583	SCREW TP PAN PH #6x1/2 Z050	1				
17	363036	SPACER	4				
NS	860859	NYLON BUSHING / LOWER HINGE	2				
19	500552	SCREW TP OV PH #6x3/4 Z050	4				
20	363423	STRAP / 145MM	1				
20	363464	WASHER RETAINER	1				
20	500583	SCREW TP PAN PH #6x1/2 Z050	1				
21	502526	SCREW TC BDG PH #12-24x3/4 Z050	4				
23	502646	WASHER LO INT .129x.280x.021 ZP	4				
		UTILITY SHELF / W/"TOURISMO II" & "ULTRA"					
25	860657	SHELF	1				
27	860659	ATTACHMENT	2				
NS	860892	PIVOT ASSY	2				
29	500871	SCREW TP OV PH #8x1 BK	4				

From Y-7046 To 6-8906		Date:07/2024	PAGE:Y2-1829-00

ACCESSORIES PASSENGER'S SEAT - "PREVOST"

Item#	Part	Description	XLII 45	XLII MTH40	XLII MTH45	XLII MTH45E	NOTES
		V.I.P PASSENGER'S SEAT CENTER CONSOLE					
40	363519	CENTER CONSOLE V.I.P./ PLAIN	1				
40	363557	CENTER CONSOLE V.I.P./ W/2 GLASS HOLDER	1				
40	363558	CENTER CONSOLE V.I.P./ W/2 GLASS HOLDER & ASHTRAY	1				
40	363608	CENTER CONSOLE V.I.P./ W/2 SELECTOR HEAD SET	1				
40	363983	CENTER CONSOLE V.I.P./ W/2 GLASS HOLDER & 2 SELECTOR HEAD SET	1				
41	900675	GLASS HOLDER, PLASTIC BLACK	1				
42	900518	ASHTRAY	1				
NS	363079	KIT FOR RETROFIT TABLE / SPACER WALL AND STRUCTURE	AR				
. NS	IS-91077	. SEE INSTRUCTION SHEET	1				
50	364021	SUPPORT ASSY CARD TABLE UPPER 900MM	1				
. NS	364020	. SUPPORT UPPER	1				
51	364024	SUPPORT ASSY CARD TABLE LOWER 900MM	1				
. NS	364023	. SUPPORT LOWER	1				
52	506025	. RUBBER CHANNEL / 1/18" x 5/16" INT "U" SHAPE / SQUARE C.T.L.	AR				
53	364022	. STRAP RETAINER	2				
54	504113	. RIVET POP DOME CLE 3/16x1/4 AL	2				
55	506756	. VELCRO / LOOP ADHESIF 1" x 75'	AR				
61	363897	PLATE	AR				
62	363518	SUPPORT	AR				
63	900527	GLASS HOLDER	AR				
63	900788	GLASS HOLDER	AR				
NS	860642	GLASS HOLDER / W/"AMAYA" / W/2 HOLES FOR SCREW	1				
64	860875	TRASH BAG, SUPPORT / BLACK FIXED TO WALL	AR				
64	863976	TRASH BAG, SUPPORT / GREY FIXED TO WALL	AR				
NS	861107	TRASH BAG / BOX OF 5000	AR				
65	502664	SCREW TP PAN PH #8x1 SS EMN	4				
80	400543	DECAL, "EMERGENCY EXIT" W/RED ARROW / ENGLISH & FRANCAIS	AR				
80	405627	DECAL, "EMERGENCY EXIT" W/RED ARROW / ENGLISH & SPANISH	AR				
80	403694	DECAL / BRAILLE / EMERGENCY EXIT TO YOUR RIGHT	AR				
80	403695	DECAL / BRAILLE / EMERGENCY EXIT TO YOUR LEFT	AR				
80	403696	DECAL / BRAILLE / EMERGENCY EXIT ONLY / ENGLISH & FRANCAIS To 5-8699	AR				
80	405775	DECAL / BRAILLE / EMERGENCY EXIT ONLY / ENGLISH & FRANCAIS From 5-8700	AR				
80	403707	DECAL / BRAILLE / TIRER LA BARRE POUSSER LA FENETRE / FRENCH	1				
81	400544	DECAL "PULL UP BAR & PUSH OUT WINDOW" / ENGLISH & FRANCAIS	AR				
81	405628	DECAL "PULL UP BAR & PUSH OUT WINDOW" / ENGLISH & SPANISH	AR				
81	403693	DECAL / BRAILLE / PULL UP BAR PUSH OUT WINDOW / ENGLISH	AR				
82	403925	DECAL SEAT EVEN-NUMBERED ON AISLE / 1-60 / NO SMOKING	1				
82	403928	DECAL SEAT ODD & EVEN NUMBERED ON AISLE / 1-6 / NO SMOKING	1				

From Y-7046 To 6-8906		Date:07/2024	PAGE:Y2-1829-00

ACCESSORIES PASSENGER'S SEAT - "PREVOST"

Item#	Part	Description	XLII 45	XLII MTH40	XLII MTH45	XLII MTH45E	NOTES
83	403926	DECAL SEAT ODD-NUMBERED ON AISLE / 1-60	1				
83	403927	DECAL SEAT ODD & EVEN NUMBERED ON AISLE / 1-6	1				
NS	405211	DECAL / "WARNING …LOWER THE ARMREST / ENGLISH & FRANCAIS	1				
NS	405649	DECAL / "WARNING …LOWER THE ARMREST / ENGLISH & SPANISH	1				
		P) CALL ORDER DESK FOR SPECIFIC APPLICATION (V.I.N.)					

From Y-7046 To 6-8906		Date:07/2024	PAGE:Y2-1832-00
FRONT FINISHING CAP - BUS			

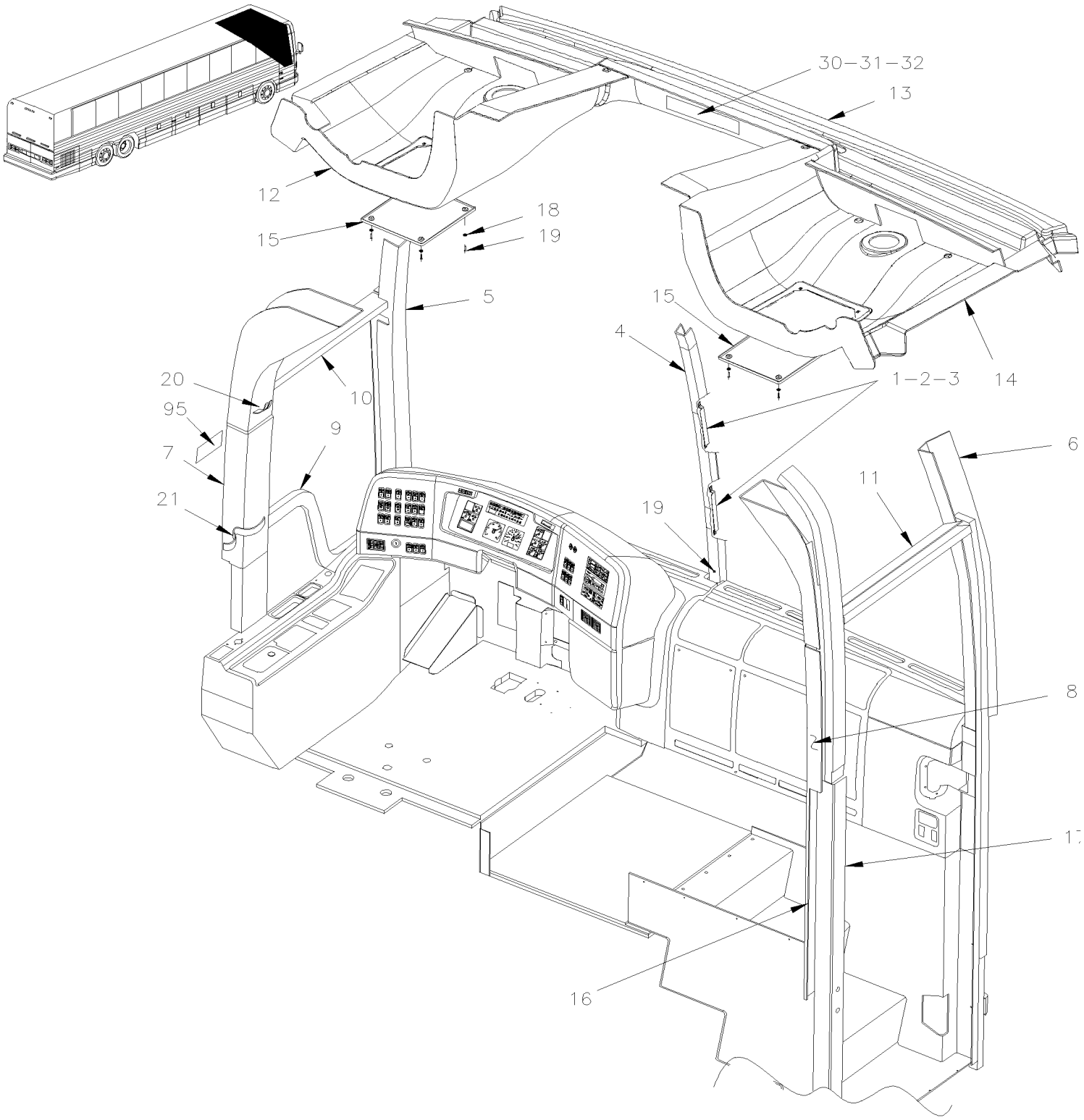

From Y-7046 To 6-8906		Date:07/2024	PAGE:Y2-1832-00

FRONT FINISHING CAP - BUS

Item#	Part	Description	XLII 45	XLII MTH40	XLII MTH45	XLII MTH45E	NOTES
1	326744	CENTRAL MOULDING SUPPORT	6				
2	502531	SCREW CAP HEX M6-1.0x16 G8.8 Z050	6				
3	502511	NUT HEX NYRT M6-1.0 Z050	6				
4	327142	CENTER MOULDING / W/WINDSHIELD 86" To Y-7133	1				
4	327351	CENTER MOULDING From Y-7134 To Y-7220	1				
4	327370	CENTER MOULDING From Y-7221	1				
5	327042	FINISHING MOULDING L.H. WINDSHIELD	1				
6	327000	FINISHING MOULDING R.H. WINDSHIELD	1				
7	327187	L.H. MOULDING	1				
8	327186	R.H. MOULDING	1				
NS	500463	WASHER FN CKF .187x.500x.090 BR Z050	AR				
NS	500552	SCREW TP OV PH #6x3/4 Z050	AR				
9	326741	FINISHING MOULDING SERVICE DOOR	1				
10	327135	UPPER MOULDING SERVICE DOOR To 2-7768	1				
10	327681	UPPER MOULDING SERVICE DOOR From 2-7768	1				
11	327134	UPPER MOULDING ENTRANCE DOOR	1				
12	341060	TRANSITION CEILING FRONT LEFT To 2-7892	1				
12	341099	TRANSITION CEILING FRONT LEFT W/HALOGEN From 2-7893	1				
13	341061	TRANSITION CEILING To 3-8132	1				
13	327136	TRANSITION CEILING From 3-8133 To 3-8212	1				
13	341101	TRANSITION CEILING PANEL / W/FAN INSTALLATION From 4-8213	1				
14	341062	TRANSITION CEILING FRONT RIGHT To 2-7892	1				
14	341100	TRANSITION CEILING FRONT RIGHT W/HALOGEN From 2-7893	1				
15	341070	ACCESS PANEL CEILING FRONT	2				
NS	500563	NUT SPR U #8-32 .094-.125	8				
16	327214	R.H. MOULDING	1				
17	327213	R.H. MOULDING	1				
18	500464	WASHER FN CKF .210x.540 SS	AR				
19	500626	SCREW TP OV PH #8x3/4 Z050	AR				
NS	502741	NUT AN #8 NYL	8				
20	900297	HOOK / COAT	1				
NS	500633	SCREW CAP HEX 5/16-24x7/8 G5 ZP	1				
NS	405052	SUPPORT / REINFORCEMENT REAR OF CAP	1				
NS	504340	RIVET POP DOME OE 1/8x3/16 SS	2				
21	409105	STRAP ASSY	1				
NS	5001055	NUT WELL M4-0.7x14.5	2				
NS	500345	WASHER FN CKF .187x.500x.090 BR BK	2				
NS	5001429	SCREW MA FL PH M4-0.7x25 BK	2				
30	405425	DECAL MOUNTING PLATE / 275MM X 46MM To 5-8605	1				
30	405707	DECAL MOUNTING PLATE / 250MM X 46MM From 5-8606	1				
31	404636	DECAL / "WATCH YOUR STEP" To 5-8605	1				
31	405708	DECAL / "WATCH YOUR STEP" From 5-8606 To 6-8843	1				

From Y-7046 To 6-8906		Date:07/2024	PAGE:Y2-1832-00

FRONT FINISHING CAP - BUS

Item#	Part	Description	XLII 45	XLII MTH40	XLII MTH45	XLII MTH45E	NOTES
31	409155	DECAL / "WATCH YOUR STEP" 35 x 235 From 6-8844	1				
31	404637	DECAL / "ATTENTION À LA MARCHE" / BILINGUAL To 5-8456	1				
31	405689	DECAL / "ATTENTION À LA MARCHE" / BILINGUAL From 5-8457 To 5-8605	1				
31	405709	DECAL / "ATTENTION À LA MARCHE" / BILINGUAL From 5-8606 To 6-8843	1				
31	409156	DECAL / "ATTENTION À LA MARCHE" / BILINGUAL 35 x 235 From 6-8844	1				
31	405648	DECAL / "WATCH YOUR STEP" / "CUINDADO CON EL To 5-8605	1				
31	405710	DECAL / "WATCH YOUR STEP" / "CUINDADO CON EL From 5-8606 To 6-8843	1				
31	409157	DECAL / "WATCH YOUR STEP" / "CUINDADO CON EL 35 x 235 From 6-8844	1				
32	504108	RIVET POP DOME OE 1/8x1/2 AL	2				
NS	500437	WASHER FL .125x.375x.040 Z050	2				
NS	IS19921	BELT CUTTER INSTALLATION IN THE DRIVER AREA	1				
. NS	860584	. BELT CUTTER	1				
. NS	7770495	. 3M DUAL LOCK VELCRO	1				
. NS	IS-19921	. SEE INSTRUCTION SHEET	1				
. NS	FI-19921	. VOIR FEUILLE D'INSTRUCTION	1				
95	0691001	DECAL EMISSION WARNING CALIFORNIA	1				A
		A) REGULATIONS OF CALIFORNIA					

From Y-7046 To 8-9339		Date:07/2024	PAGE:Y2-1832-50
FRONT FINISHING CAP - MTH			

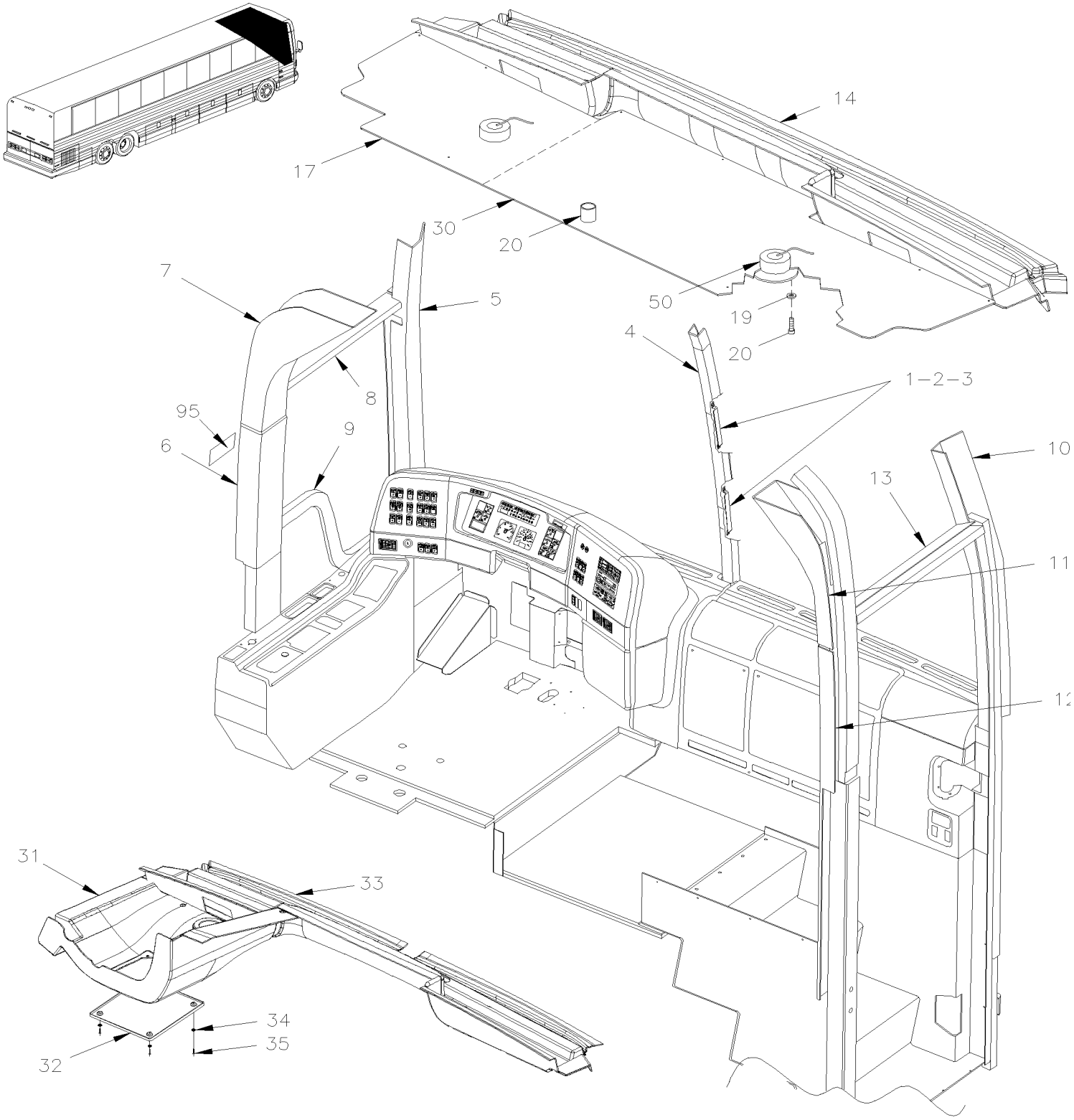

From Y-7046 To 8-9339		Date:07/2024	PAGE:Y2-1832-50

FRONT FINISHING CAP - MTH

Item#	Part	Description	XLII 45	XLII MTH40	XLII MTH45	XLII MTH45E	NOTES
1	326744	CENTRAL MOULDING SUPPORT		6	6	6	
2	502531	SCREW CAP HEX M6-1.0x16 G8.8 Z050		6	6	6	
3	502511	NUT HEX NYRT M6-1.0 Z050		12	12	12	
4	327147	CENTER MOULDING / W/WINDSHIELD 83" To Y-7128		1	1		
4	327142	CENTER MOULDING / W/WINDSHIELD 86"		1	1	1	
5	327145	L.H. MOULDING / WINDSHIELD / 83" To Y-7128		1	1		
5	327140	L.H. MOULDING / WINDSHIELD / 86"		1	1	1	
5	327182	L.H. MOULDING / WINDSHIELD 89"				1	
6	327144	L.H. MOULDING / 83" To Y-7128		1	1		
6	327139	L.H. MOULDING / 86"		1	1	1	
6	327563	L.H. MOULDING / 86"		1	1	1	A
6	327180	L.H. MOULDING / 89"				1	
6	327654	L.H. MOULDING / 89" To 3-8130				1	A
6	328012	L.H. MOULDING / 89" From 3-8131				1	
6	328013	L.H. MOULDING / 89" From 3-8131				1	A
7	327029	UPPER FINISHING MOULDING L.H.		1	1	1	
8	327135	UPPER MOULDING SERVICE DOOR		1	1	1	
9	326741	FINISHING MOULDING SERVICE DOOR		1	1	1	B
9	327179	FINISHING MOULDING SERVICE DOOR		1	1	1	C
10	327146	R.H. MOULDING / WINDSHIELD / 83" To Y-7128		1	1		
10	327141	R.H. MOULDING / WINDSHIELD / 86"		1	1	1	
10	327183	R.H. MOULDING / WINDSHIELD 89"				1	
11	327030	UPPER FINISHING MOULDING R.H.		1	1	1	
12	327143	R.H. MOULDING / 83" To Y-7128		1	1		
12	327138	R.H. MOULDING / 86"		1	1	1	
12	327181	R.H. MOULDING / 89"				1	
12	327655	R.H. MOULDING / 89"				1	A
13	327134	UPPER MOULDING ENTRANCE DOOR		1	1	1	
14	327136	TRANSITION CEILING		1	1		
14	327136	TRANSITION CEILING To 3-8130				1	
15	500463	WASHER FN CKF .187x.500x.090 BR Z050		36	36	36	
16	500552	SCREW TP OV PH #6x3/4 Z050		36	36	36	
17	327137	TRANSITION CEILING PANEL		1	1		
17	327137	TRANSITION CEILING PANEL To 2-7891				1	
17	327825	TRANSITION CEILING PANEL From 2-7892 To 3-8130				1	
18	500436	SCREW TP OV PH #10x2 Z050		AR	AR	AR	
19	500465	WASHER FN CKF .278x.729x.119 SS		AR	AR	AR	
20	504586	WASHER FL SPACER .450x.625x.875 NYL		AR	AR	AR	
30	327993	TRANSITION CEILING PANEL From 3-8131				1	
31	341099	TRANSITION CEILING FRONT LEFT W/HALOGEN From 3-8131				1	
32	341070	ACCESS PANEL CEILING FRONT From 3-8131				1	
33	327992	TRANSITION CEILING From 3-8131				1	

From Y-7046 To 8-9339		Date:07/2024	PAGE:Y2-1832-50

FRONT FINISHING CAP - MTH

Item#	Part	Description	XLII 45	XLII MTH40	XLII MTH45	XLII MTH45E	NOTES
34	500464	WASHER FN CKF .210x.540 SS From 3-8131				4	
35	500626	SCREW TP OV PH #8x3/4 Z050 From 3-8131				4	
50	**Y2-0665-00**	**ENGINE COMPARTMENT - ELECTRIC COMPONENTS**					
95	0691001	DECAL EMISSION WARNING CALIFORNIA		1	1	1	D
		A) WITHOUT CUT AWAY FOR WINDOW CLEARENCE					
		B) MTH 83"					
		C) MTH 86" & MTH 89"					
		D) REGULATIONS OF CALIFORNIA					

From Y-7046 To 6-8906		Date:07/2024	PAGE:Y2-1833-00

WINDOW FINISHING CAP & WALL

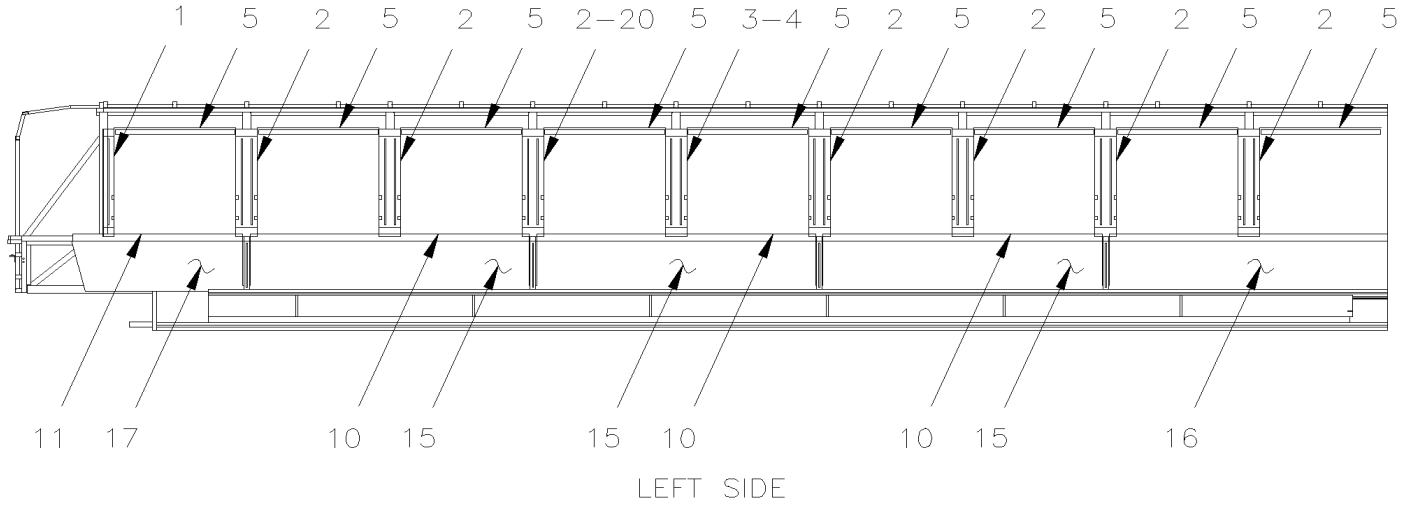

LEFT SIDE

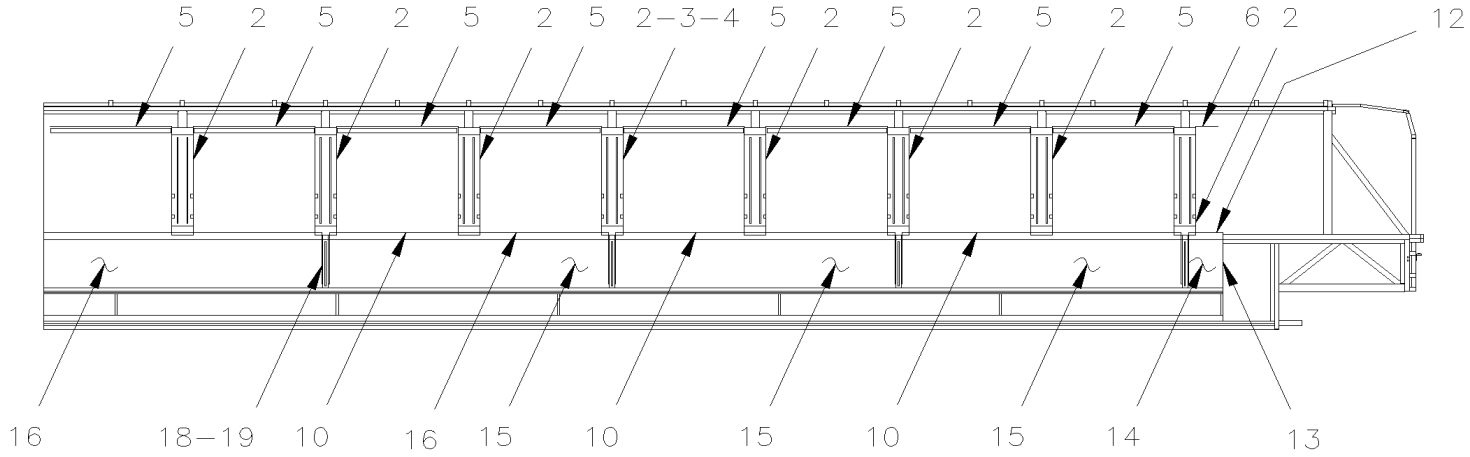

RIGHT SIDE

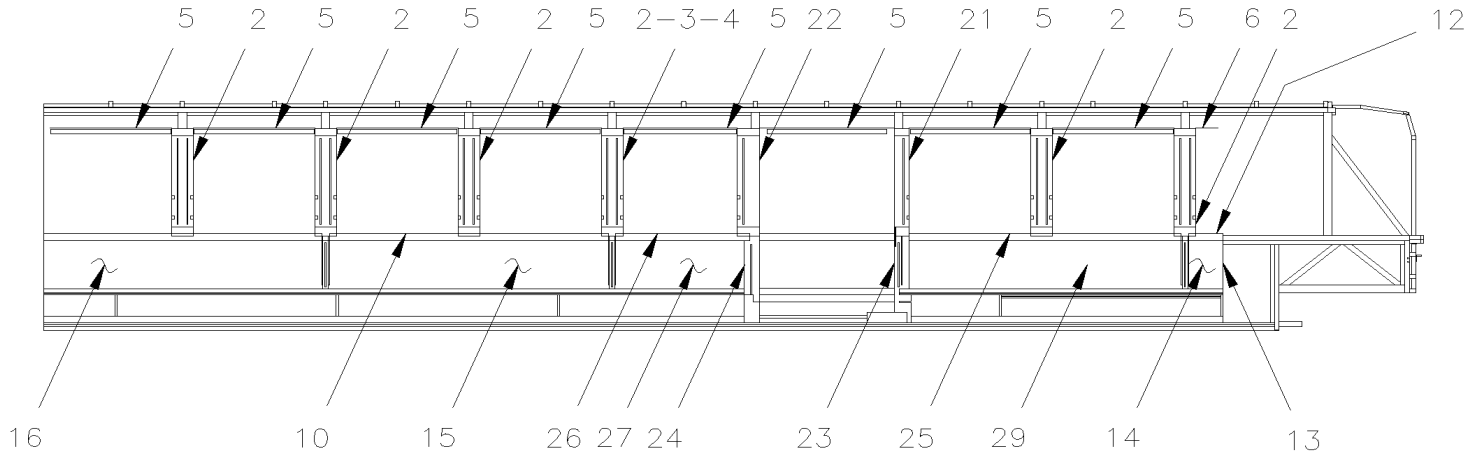

RIGHT SIDE WITH W.C.L.

From Y-7046 To 6-8906		Date:07/2024	PAGE:Y2-1833-00
WINDOW FINISHING CAP & WALL			

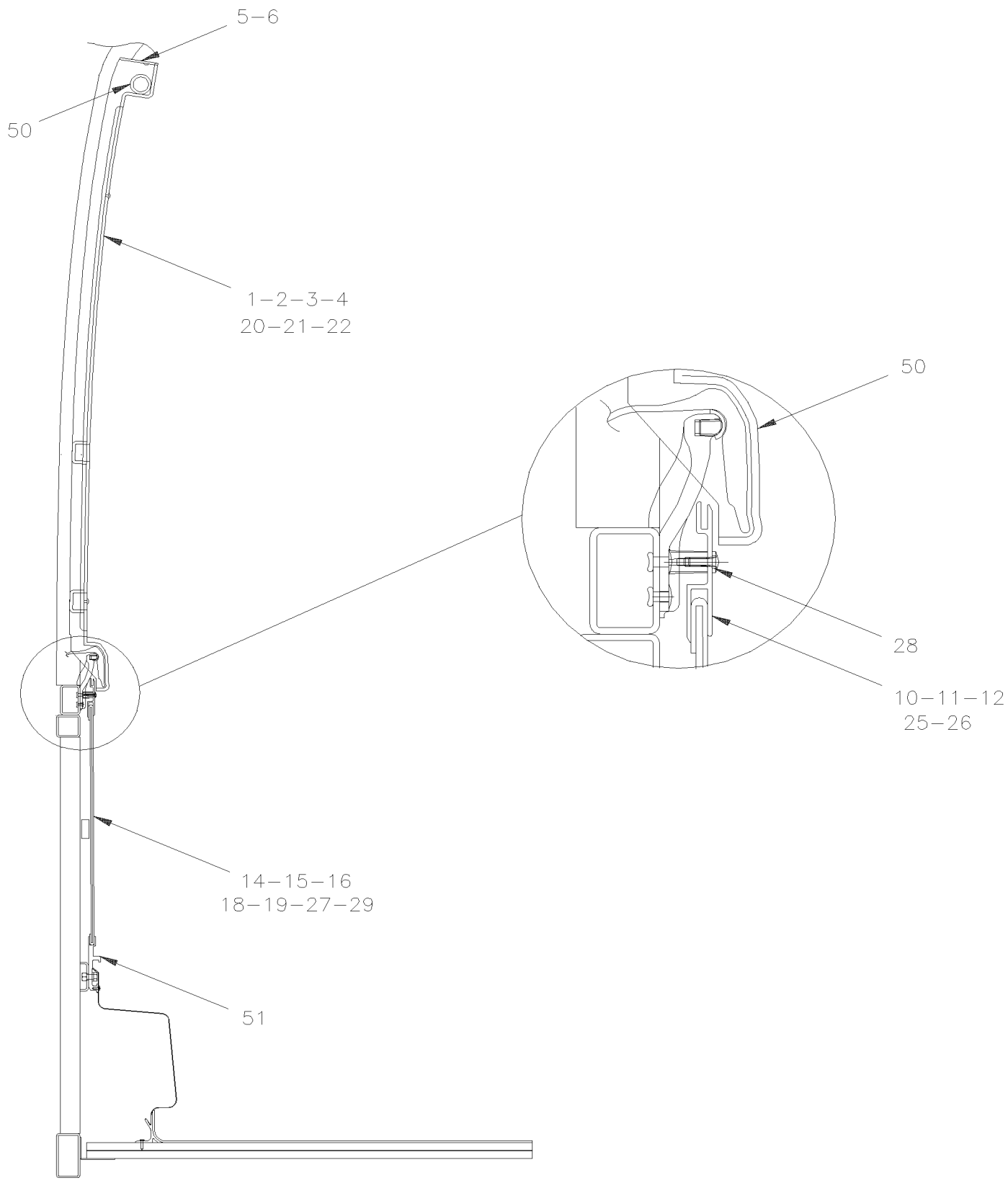

From Y-7046 To 6-8906		Date:07/2024	PAGE:Y2-1833-00

WINDOW FINISHING CAP & WALL

Item#	Part	Description	XLII 45	XLII MTH40	XLII MTH45	XLII MTH45E	NOTES
1	327109	CAP FINISHING / POST / W/S. GLASS & SUN SHADE	1				
1	327103	CAP FINISHING / POST / W/S. GLASS	1				
1	327108	CAP FINISHING / POST / W/T. GLASS & SUN SHADE	1				
1	327102	CAP FINISHING / POST / W/T. GLASS	1				
2	327107	CAP FINISHING / POST / W/S. GLASS & SUN SHADE	1				
2	327071	CAP FINISHING / POST / W/S. GLASS	1				
2	327106	CAP FINISHING / POST / W/T. GLASS & SUN SHADE	1				
2	327070	CAP FINISHING / POST / W/T. GLASS	1				
3	327105	CAP FINISHING / POST / W/S. GLASS	1				A
3	327109	CAP FINISHING / POST / W/S. GLASS & SUN SHADE To Y-7310	1				A
3	327111	CAP FINISHING / POST / W/S. GLASS & SUN SHADE	1				A
3	327104	CAP FINISHING / POST / W/T. GLASS	1				A
3	327110	CAP FINISHING / POST / W/T. GLASS & SUN SHADE From Y-7311	1				A
4	327171	CAP FINISHING / UPPER POST	2				A
NS	405067	DECAL / BLACK STRIP 3 1/2" x 46"	1				A B
5	327098	FINISHING MOULDING / UPPER WINDOW W/T.GLASS / 60MM x 1108MM To 2-7787	16				
5	327100	FINISHING MOULDING / UPPER WINDOW W/S.GLASS / 77MM x 1108MM To 2-7787	16				
5	320139	FINISHING MOULDING / UPPER WINDOW / 40MM x 1108MM From 2-7788	16				
6	327099	FINISHING MOULDING / UPPER WINDOW W/T.GLASS / 60MM x 230MM To 2-7787	1				
6	327101	FINISHING MOULDING / UPPER WINDOW W/S.GLASS / 77MM x 230MM To 2-7787	1				
6	320138	FINISHING MOULDING / UPPER WINDOW / 40MM x 230MM From 2-7788	1				
10	293293	EXTRUSION, UPPER WALL 2548MM	6				
11	293294	EXTRUSION, UPPER WALL 1526MM	1				
12	293295	EXTRUSION, UPPER WALL 293MM	1				
13	506035	TAPE RUB ADH1 NEO 1/2" x 1" x 15' / BLACK 1220X	AR				
14	327079P	PANEL LOWER WALL / FABRIC	1				
14	Call order desk	PANEL LOWER WALL / CARPET	1				P
14	Call order desk	PANEL ASSY / FORMICA	1				P
15	327078P	PANEL LOWER WALL / FABRIC	6				
15	Call order desk	PANEL LOWER WALL / CARPET	6				P
15	Call order desk	PANEL ASSY / FORMICA	6				P
16	327263P	PANEL LOWER WALL / FABRIC	2				
16	Call order desk	PANEL LOWER WALL / CARPET	2				P
16	Call order desk	PANEL LOWER WALL / FORMICA	2				P
17	Call order desk	PANEL ASSY / FABRIC	1				P
17	Call order desk	PANEL ASSY / CARPET	1				P
17	Call order desk	PANEL LOWER WALL / FORMICA	1				P
18	327024	EXTRUSION, WALL SEPARATOR 427.5MM	8				
19	322871	WOOD SPACER 1/2" X 32MM X 32MM	90				
20	327410	CAP FINISHING / POST / W/S. GLASS To 6-8802	1				W
20	329325	CAP FINISHING / POST / W/S. GLASS From 6-8803	1				W
20	327414	CAP FINISHING / POST / W/S. GLASS & SUN SHADE To 6-8802	1				W

From Y-7046 To 6-8906		Date:07/2024	PAGE:Y2-1833-00

WINDOW FINISHING CAP & WALL

Item#	Part	Description	XLII 45	XLII MTH40	XLII MTH45	XLII MTH45E	NOTES
20	329324	CAP FINISHING / POST / W/S. GLASS & SUN SHADE From 6-8803	1				W
20	327411	CAP FINISHING / POST / W/T. GLASS To 6-8802	1				W
20	329327	CAP FINISHING / POST / W/T. GLASS From 6-8803	1				W
20	327412	CAP FINISHING / POST / W/T. GLASS & SUN SHADE To 6-8802	1				W
20	329326	CAP FINISHING / POST / W/T. GLASS & SUN SHADE From 6-8803	1				W
21	327409	CAP FINISHING / POST / W/S. GLASS	1				W
21	327407	CAP FINISHING / POST / W/S. GLASS & SUN SHADE	1				W
21	327408	CAP FINISHING / POST / W/T. GLASS	1				W
21	327406	CAP FINISHING / POST / W/T. GLASS & SUN SHADE	1				W
22	327404	CAP FINISHING / POST / W/S. GLASS	1				W
22	327402	CAP FINISHING / POST / W/S. GLASS & SUN SHADE	1				W
22	327405	CAP FINISHING / POST / W/T. GLASS	1				W
22	327401	CAP FINISHING / POST / W/T. GLASS & SUN SHADE	1				W
22	405143	DECAL / BLACK STRIP W/DOTTED 1117MM x 118MM	1				
23	327433	MOLDING, FINISHING	1				
24	327432	MOLDING, FINISHING	1				
25	293506	EXTRUSION, UPPER WALL 2481MM	1				
26	293505	EXTRUSION, UPPER WALL 1214MM	1				
27	327424P	PANEL LOWER WALL / FABRIC	1				
27	Call order desk	PANEL LOWER WALL / CARPET	1				P
27	Call order desk	PANEL LOWER WALL	1				P
28	500611	SCREW TC PAN PH #10-24x1/2 Z050	AR				
29	327078P	PANEL LOWER WALL / FABRIC	1				
29	Call order desk	PANEL LOWER WALL / CARPET	1				P
29	Call order desk	PANEL ASSY / FORMICA	1				P
50	**Y2-1884-00**	**SIDE WINDOW - BUS**					
51	**Y2-2220-00**	**UNDER FLOOR AIR DUCTING**					
		A) WITH A/C IN PARCEL RACK					
		B) UPPER WINDOW					
		W) WITH W.C.L					
		P) CALL ORDER DESK FOR SPECIFIC APPLICATION (V.I.N.)					

From Y-7046 To 8-9339		Date:07/2024	PAGE:Y2-1834-00
REAR FINISHING CAP			

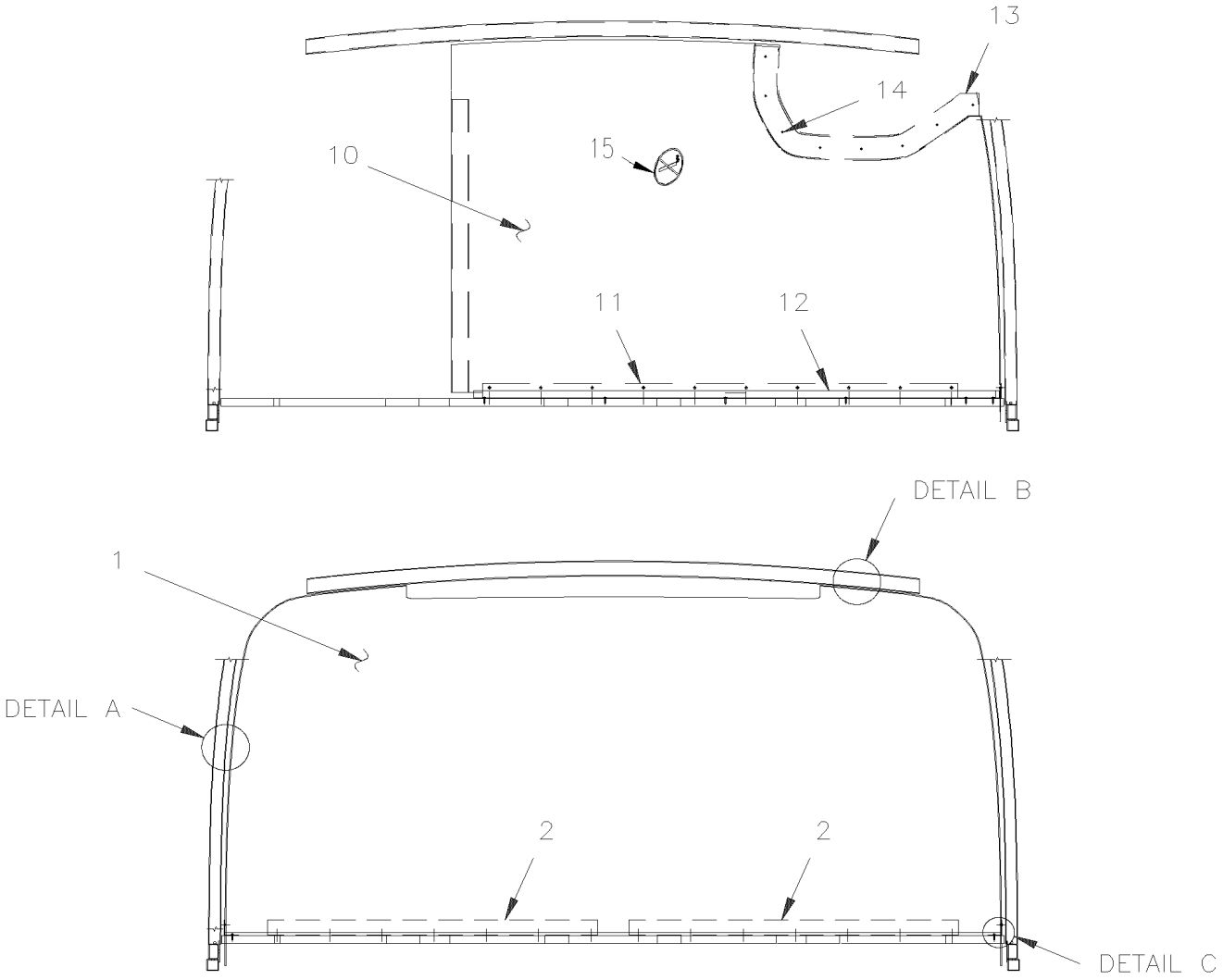

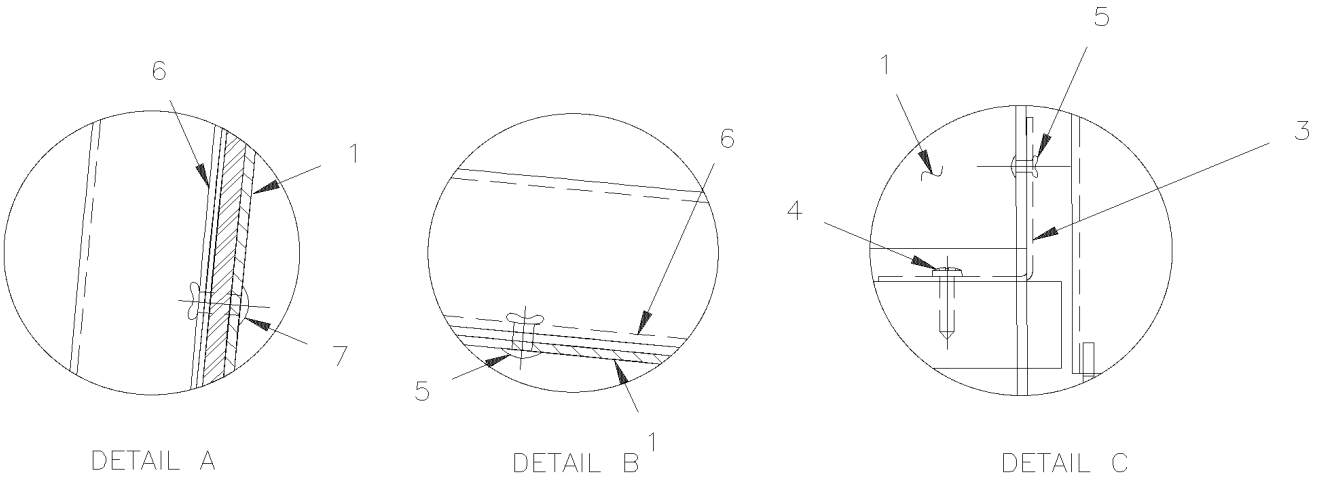

From Y-7046 To 8-9339		Date:07/2024	PAGE:Y2-1834-00

REAR FINISHING CAP

Item#	Part	Description	XLII 45	XLII MTH40	XLII MTH45	XLII MTH45E	NOTES
1	341011	CAP, REAR / FIBERGLASS LIGHT GREY MTH 83" To Y-7128			1		
1	341038	CAP, REAR / FIBERGLASS CHARCOAL MTH 83" To Y-7128			1		
1	341028	CAP, REAR / FIBERGLASS LIGHT GREY MTH 83" To Y-7128		1			
1	341036	CAP, REAR / FIBERGLASS CHARCOAL MTH 83" To Y-7128		1			
1	341012	CAP, REAR / FIBERGLASS LIGHT GREY MTH 86"			1	1	
1	341039	CAP, REAR / FIBERGLASS CHARCOAL MTH 86"			1	1	
1	341029	CAP, REAR / FIBERGLASS LIGHT GREY MTH 86"		1			
1	341037	CAP, REAR / FIBERGLASS CHARCOAL MTH 86"		1			
1	341080	CAP, REAR / FIBERGLASS MTH 89"				1	
2	341045	ANGLE 45MM X 50MM X 1040MM		2	2	2	
3	341046	ANGLE 50MM X 50MM X 315MM		2	2	2	
4	500641	SCREW TP PAN PH #8x3/4 Z050		24	24	24	
4	500592	SCREW TP FL PH #8x1 ZP To 6-8906	14				
5	504121	RIVET POP DOME OE 1/4x1/4 AL		AR	AR	AR	
6	506466	TAPE RUB ADH1 CC POL 1/16" x 1 1/2" x 100 / GREY 2520		AR	AR	AR	
7	504132	RIVET POP DOME OE 1/4x1/2 MNL		5	5	5	
10	341033	CAP, REAR / FIBERGLAS WITH TISSUS To 6-8906	1				
10	341027	CAP, REAR / FIBERGLAS LIGHT GREY To 6-8906	1				
10	341098	CAP, REAR / FIBERGLAS LIGHT GREY / W/O LAVATORY To 6-8906	1				
11	341043	ANGLE 45MM X 50MM X 1500MM To 6-8906	1				
12	341058	FINISHING ANGLE 344MM X 1660MM To 6-8906	1				
13	327032	FINISHING CAP / PLASTIC / PARCEL RACK CONTOUR To 6-8906	1				
14	504108	RIVET POP DOME OE 1/8x1/2 AL To 6-8906	6				
15	405178	MOUNTING PLATE 228MM x 228MM SS To 6-8906	1				
NS	500339	SCREW MA RND PH #6-32x3/4 SS To 6-8906	4				
NS	500286	NUT WELL #6-32 To 6-8906	4				
15	901026	DECAL / "NO SMOKING" / 4" O.D. To 6-8906	1				

From Y-7046 To 6-8906		Date:07/2024	PAGE:Y2-1836-00
PARCEL RACK			

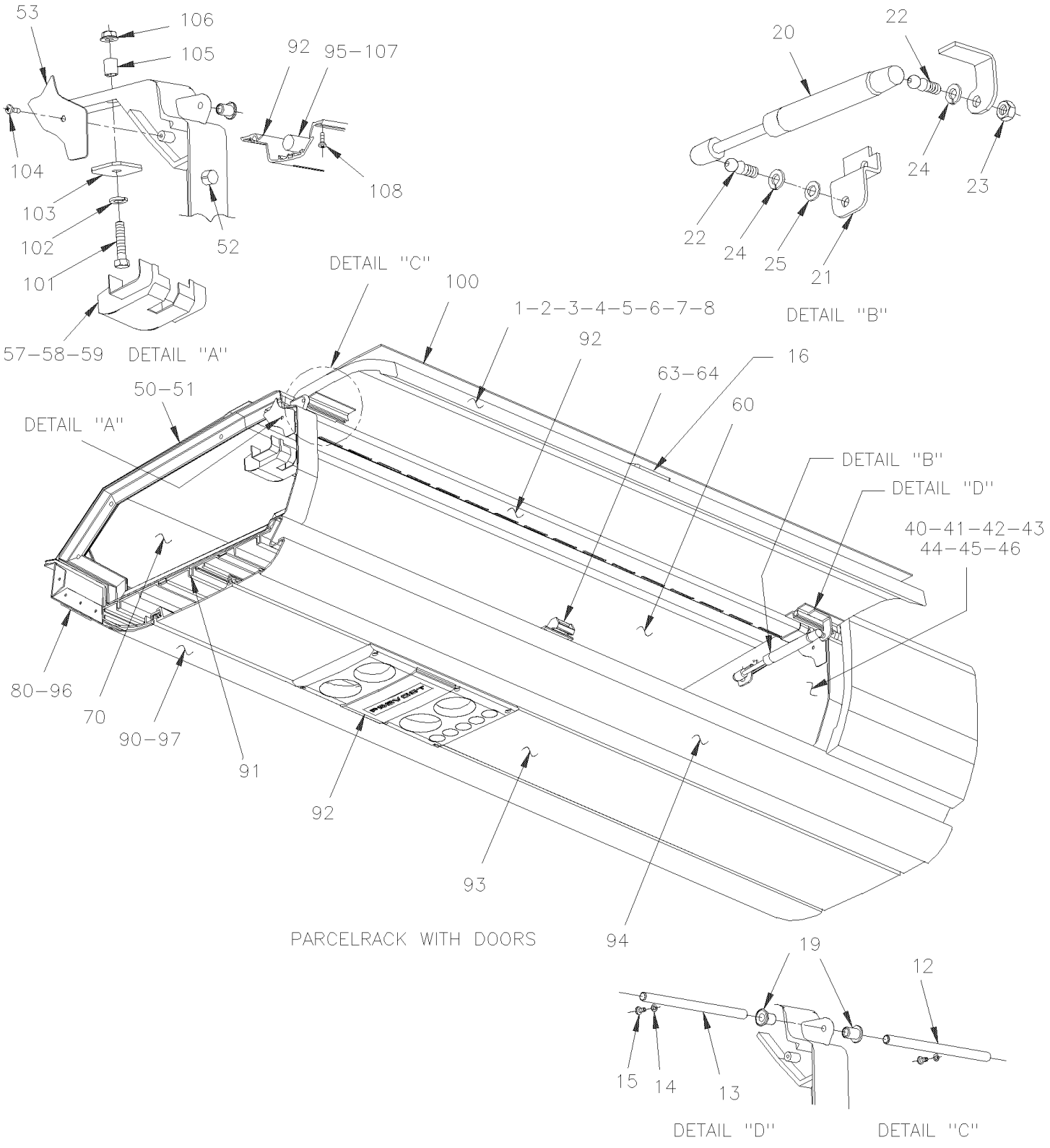

From Y-7046 To 6-8906		Date:07/2024	PAGE:Y2-1836-00
PARCEL RACK			

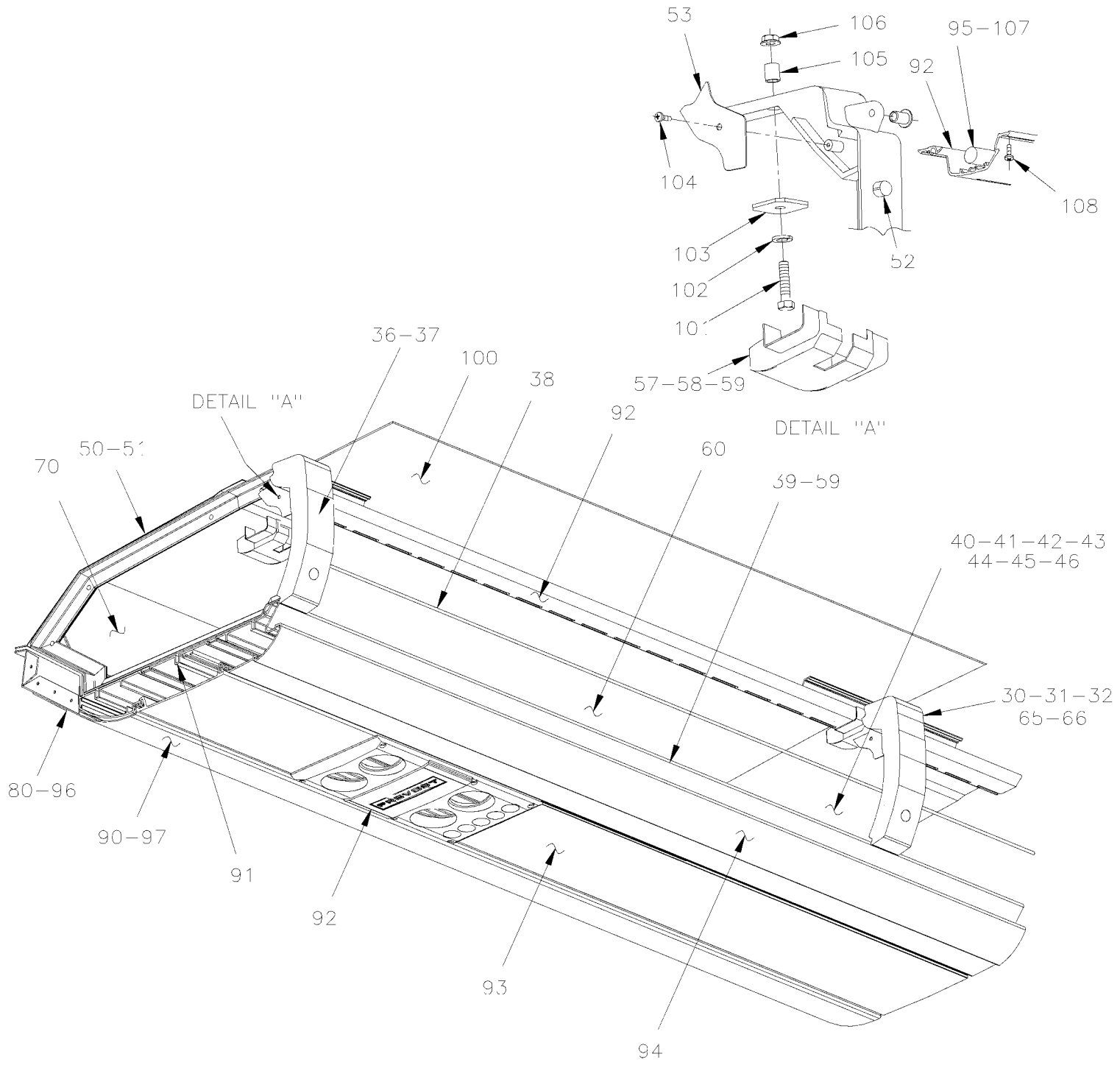

PARCELRACK WITH CORD

From Y-7046 To 6-8906		Date:07/2024	PAGE:Y2-1836-00
PARCEL RACK			

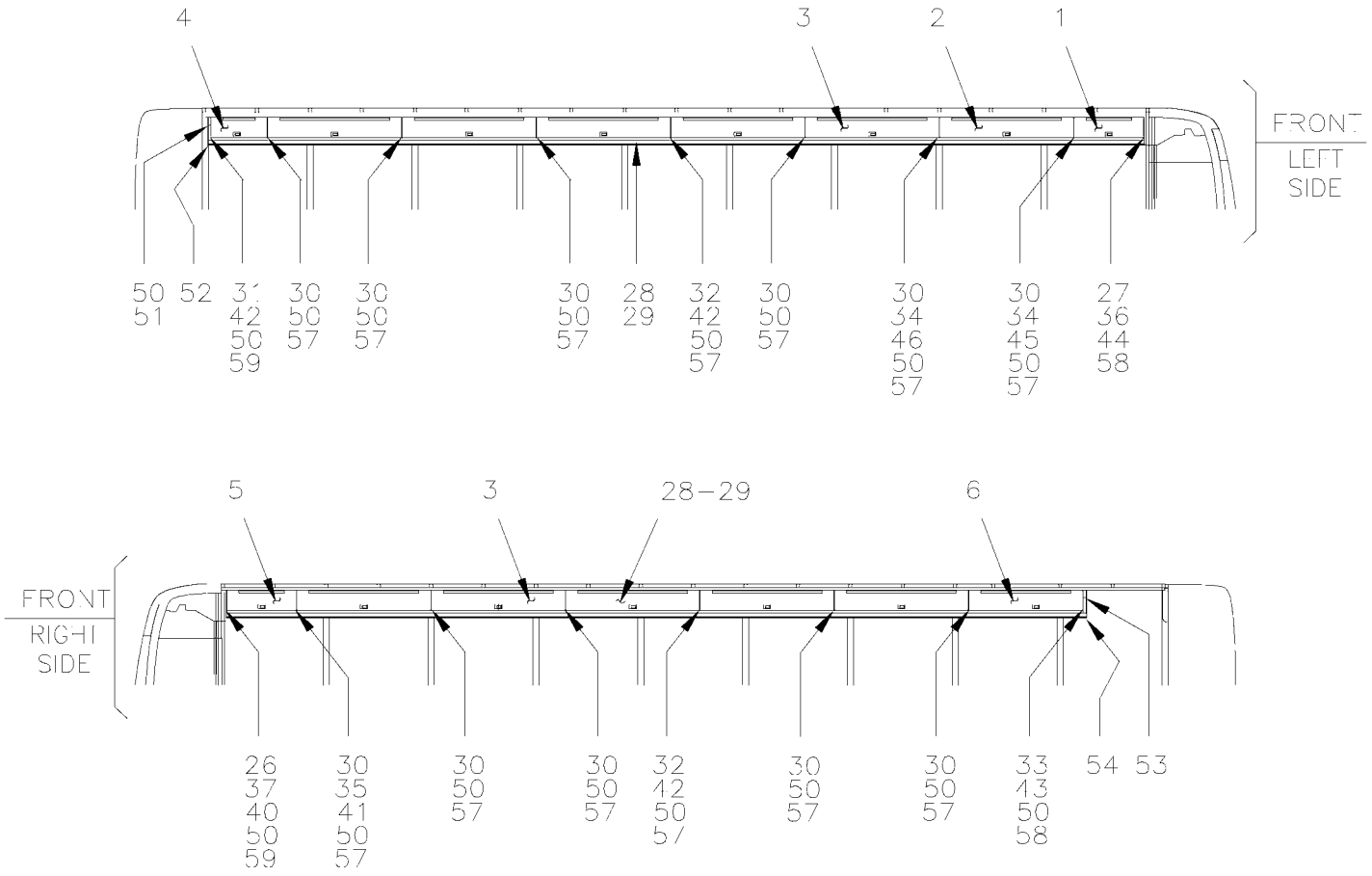

XL2-45

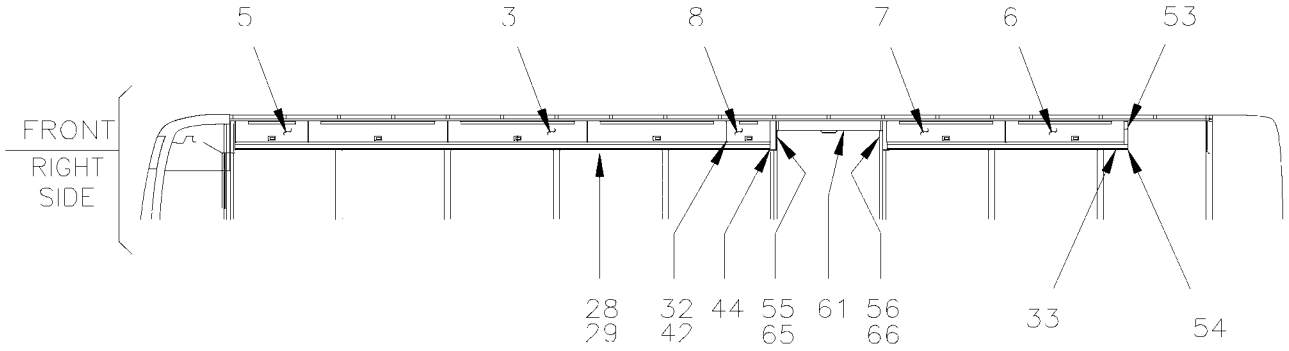

XL2-45 WITH "RICON"

From Y-7046 To 6-8906		Date:07/2024	PAGE:Y2-1836-00
PARCEL RACK			

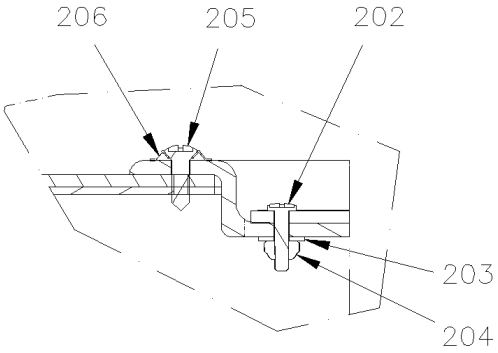

VIEW A–A

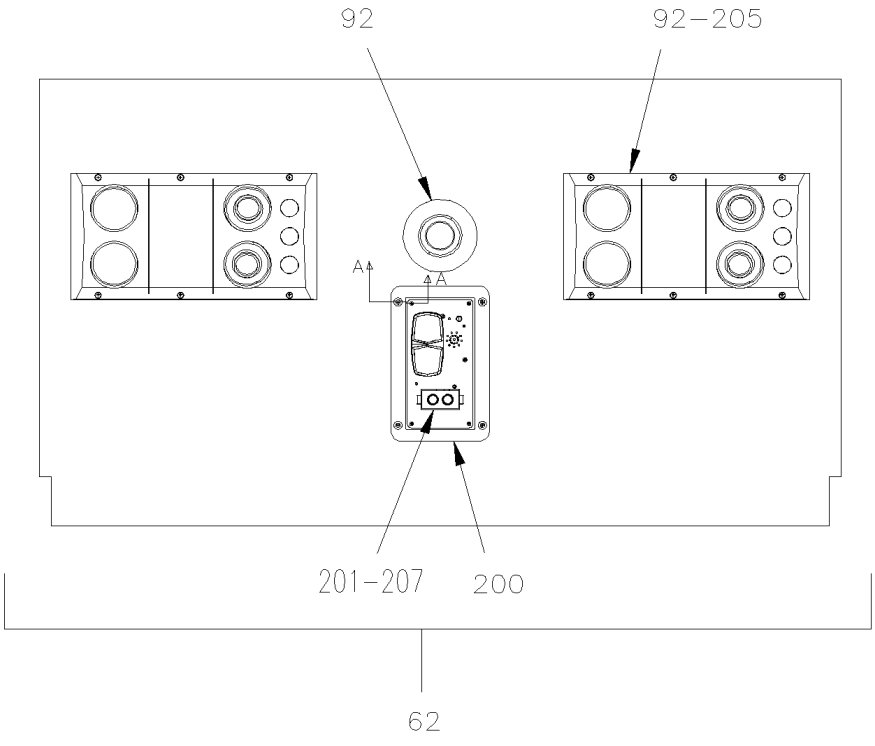

FROM 5–8606

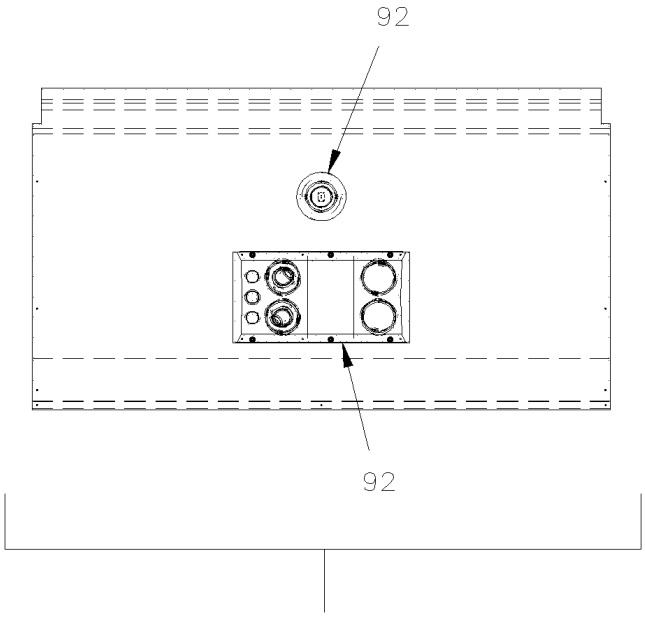

UP TO 2–7866

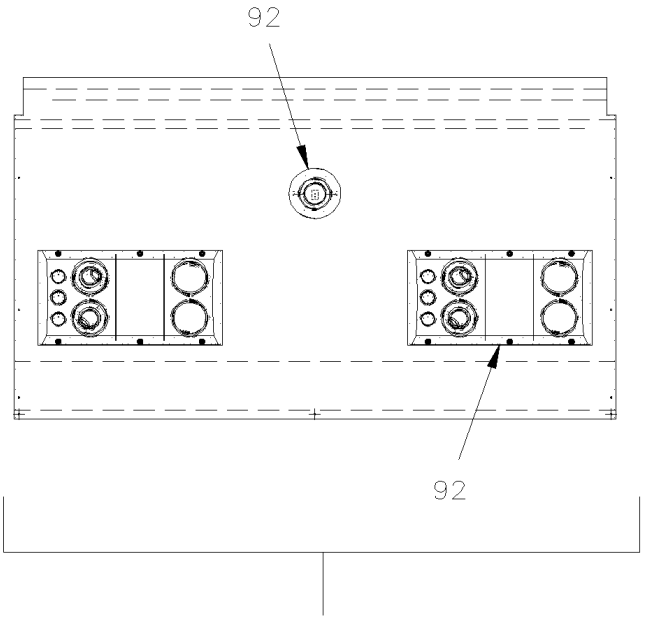

FROM 2–7867 TO 5–8605

From Y-7046 To 6-8906		Date:07/2024	PAGE:Y2-1836-00

PARCEL RACK

Item#	Part	Description	XLII 45	XLII MTH40	XLII MTH45	XLII MTH45E	NOTES
1	313315	DOOR, PARCEL RACK / L.H. / 864MM To 3-8012	1				M
1	313508	DOOR, PARCEL RACK / L.H. / W/LOCK / GREY / 860MM From 3-8013	1				
1	310469	DOOR, PARCEL RACK / L.H. / W/LOCK / GREY / 860MM	1				F
2	313485	DOOR, PARCEL RACK / W/LOCK / 1654MM To 3-8012	1				M
2	313510	DOOR, PARCEL RACK / W/LOCK / GREY / 1654MM From 3-8013	1				
2	310471	DOOR, PARCEL RACK / W/LOCK / GREY / 1654MM	1				F
3	313314	DOOR, PARCEL RACK / 1654MM To 3-8012	10				M
3	313506	DOOR, PARCEL RACK / GREY / 1654MM From 3-8013	10				
3	310467	DOOR, PARCEL RACK / GREY / 1654MM	1				F
4	313254	DOOR, PARCEL RACK / L.H. / 701MM To 3-8012	1				M
4	313503	DOOR, PARCEL RACK / GREY / 701MM From 3-8013	1				
4	310464	DOOR, PARCEL RACK / GREY / 701MM	1				F
5	313321	DOOR, PARCEL RACK / R.H. / 861MM To 3-8012	1				M
5	313507	DOOR, PARCEL RACK / R.H. / GREY / 860MM From 3-8013	1				
5	310468	DOOR, PARCEL RACK / R.H. / GREY / 860MM	1				F
5	313322	DOOR, PARCEL RACK / R.H. W/LOCK / 861MM To 3-8012	1				F
5	313505	DOOR, PARCEL RACK / R.H. W/LOCK / GREY / 860MM From 3-8013	1				
5	310466	DOOR, PARCEL RACK / R.H. W/LOCK / GREY / 860MM	1				F
6	313255	DOOR, PARCEL RACK / 1410MM To 3-8012	1				M
6	313497	DOOR, PARCEL RACK / GREY / 1410MM From 3-8013	1				F
7	313464	DOOR, PARCEL RACK / 1410MM To 3-8012	1				M
7	313668	DOOR, PARCEL RACK / 1410MM From 3-8013	1				
7	310473	DOOR, PARCEL RACK / 1410MM	1				F
8	313465	DOOR, PARCEL RACK / 516MM To 3-8012	1				M
8	313669	DOOR, PARCEL RACK / 516MM From 3-8013	1				
8	310474	DOOR, PARCEL RACK / 516MM	1				F
NS	313678	. RUBBER BUMPER From 3-8013	2				
12	312993	PIVOT ROD 3 1/8" To 3-8012	1				M
12	313677	PIVOT ROD 3" From 3-8013	1				
13	313273	PIVOT ROD 6" To 3-8012	1				B
13	313676	PIVOT ROD 6" From 3-8013	1				
14	500240	WASHER LO EXT .195x.410x.025 Z050	1				
15	5001036	SCREW MA PAN PH M4-0.7x10 Z050	1				
16	810092	HANDLE	1				
16	810093	HANDLE W/LOCK	1				
. NS	810104	. KEY (7216)	1				
NS	313532	COVER DOOR HANDLE PARCEL RACK NSS From 3-8013	1				
NS	500557	SCREW MA PAN PH #8-32x3/8 SS From 3-8013	2				
19	313285	BUSHING NYLON FLANGE / 8.5 I.D. X 13.6 O.D. O	AR				
NS	5001481	SPACER NYLON .323 I.D. X .750 O.D. X .125	AR				
20	980020	CYLINDER GAZ / 244/164MM C/C / 35LBS	15				
21	312841	SUPPORT, CYLINDER DOOR	15				

From Y-7046 To 6-8906		Date:07/2024	PAGE:Y2-1836-00

PARCEL RACK

Item#	Part	Description	XLII 45	XLII MTH40	XLII MTH45	XLII MTH45E	NOTES
22	980015	BALL STUD / W/10 MM X M8-1.25 / 29.18 MM	AR				
22	980027	BALL STUD / W/10 MM X M8-1.25 / 36.5MM	1				
23	980016	NUT, CYLINDER RETAINER	AR				
23	502847	NUT HEX NYRT M8-1.25 N500	1				
24	502509	WASHER LO INT 8.4x15.0x0.8 Z050	1				
24	502638	WASHER FL .312x.734x.065 N500	1				
25	500874	WASHER FL 8.4x17.0x1.6 Z050	1				
26	312904	SUPPORT FRONT R.H. / "C" FORM 390MM	1				
27	312902	SUPPORT FRONT R.H. / "C" FORM 390MM	1				
28	312930	COVER / L.H. SIDE OF VENTILATOR BOX	2				
29	312929	COVER / FRONT OF VENTILATOR BOX	2				
30	312648	PILAR COVERING	10				
32	312964	PILAR COVERING GREY	2				
33	313536	PILAR COVERING	1				
34	312920	FINISHING CAP L.H. / FRONT OF P.R.	2				
35	312938	PILAR COVERING GREY	2				
36	312965	PILAR COVERING R.H.	1				
37	312966	PILAR COVERING L.H.	1				
38	312659	CORD, RUBBER 359"	11				
. NS	506066	. CORD, RUBBER EXTRUSION NEO 7/16" O.D. / C.T.L.	AR				
38	312658	CORD, RUBBER 434"	1				
. NS	506066	. CORD, RUBBER EXTRUSION NEO 7/16" O.D. / C.T.L.	AR				
38	312755	CORD, RUBBER 253"	1				
. NS	506066	. CORD, RUBBER EXTRUSION NEO 7/16" O.D. / C.T.L.	AR				
38	313448	CORD, RUBBER 111"	1				
. NS	506066	. CORD, RUBBER EXTRUSION NEO 7/16" O.D. / C.T.L.	AR				
NS	506066	CORD, RUBBER EXTRUSION NEO 7/16" O.D. / C.T.L.	AR				
NS	504452	CLAMP "E-Z CLIP" / "TUBE-O" / 7/16" / HC9-7	AR				
39	312984	EDGE MOULDING GREY 1600MM	11				
39	312985	EDGE MOULDING GREY 785MM	2				
39	313193	EDGE MOULDING GREY 616MM	1				
39	313195	EDGE MOULDING GREY 1324.5MM	1				
40	312905	COVER / PLAIN / W/CORD	1				
40	312595	COVER L.H. ASSY / W/LIGHT	1				
. NS	312593	. COVER L.H. / W/LIGHT HOLE	1				
41	312594	COVER L.H. / PLAIN	1				
41	312905	COVER / PLAIN / W/CORD	1				
42	312905	COVER / PLAIN / W/CORD	3				
42	312595	COVER L.H. ASSY / W/LIGHT	3				
. NS	312593	. COVER L.H. / W/LIGHT HOLE	1				
43	312514	COVER R.H. / PLAIN OFFSET W/CORD GREY	1				
43	313542	COVER R.H. / PLAIN OFFSET / W/DOOR	1				

From Y-7046 To 6-8906		Date:07/2024	PAGE:Y2-1836-00

PARCEL RACK

Item#	Part	Description	XLII 45	XLII MTH40	XLII MTH45	XLII MTH45E	NOTES
44	312906	COVER / PLAIN / W/CORD	1				
44	312516	COVER R.H. ASSY / W/LIGHT	1				
. NS	312515	. COVER R.H. / W/LIGHT HOLE	1				
45	312906	COVER / PLAIN / W/CORD	1				
46	312596	COVER R.H. / PLAIN	1				
46	312906	COVER / PLAIN / W/CORD	1				
50	313287	SUPPORT, PARCEL RACK To 2-7740	17				
50	312921	SUPPORT, PARCEL RACK From 2-7741 To 3-7942	17				
50	315887	SUPPORT, PARCEL RACK GREY From 3-7943	17				
51	313402	FINISHING CAP L.H. / FRONT OF P.R.	1				
52	313467	FINISHING CAP L.H. / UNDER OF P.R. To Y-7670	1				
52	313615	FINISHING CAP L.H. / UNDER OF P.R. From 1-7671	1				
53	313401	FINISHING CAP R.H. / FRONT OF P.R.	1				
54	313468	FINISHING CAP R.H. / UNDER OF P.R.	1				
55	313537	COVER R.H. END CLOSING	1				
56	313538	COVER L.H. END CLOSING	1				
57	312509	COVER FINISHING PILAR LIGHTING MODULE	13				
58	312446	COVER FINISHING PILAR L.H. LIGHTING MODULE	2				
59	312508	COVER FINISHING PILAR R.H. LIGHTING MODULE	2				
60	312477	CEILING PANEL #1 R.H.	1				
60	313207	CEILING PANEL #7 R.H.	1				
60	313226	CEILING PANEL #8 L.H.	1				
60	313343	CEILING PANEL #4 R.H. & #5 L.H. W/A/C PARCEL	1				
60	313429	CEILING PANEL #5 R.H. / W/"RICON"	1				
60	313430	CEILING PANEL #6 R.H. / W/"RICON"	1				
NS	312243	INSULATING / TOP PANEL & STRUCTURE 1371.6MM	AR				
60	500964	WASHER FL .203x.500x.047 Z050	AR				
60	500654	SCREW TC BDG PH #8-32x1/2 Z050	AR				
62	Call order desk	CEILING PANEL ASSY W/1 READING LIGHT To 2-7866	1				P
62	315885P	CEILING PANEL ASSY W/2 READING LIGHT From 2-7867 To 5-8605	1				
62	Call order desk	CEILING PANEL ASSY W/2 READING LIGHT W/LED From 2-7867 To 5-8605	1				P
62	Call order desk	CEILING PANEL ASSY W/2 READING LIGHT From 5-8606	1				P B
62	Call order desk	CEILING PANEL ASSY W/2 READING LIGHT W/LED From 5-8606	1				P B
63	312812	CATCH To 2-7764	15				
63	313624	CATCH From 2-7765 To 3-8012	15				
63	313667	CATCH GREY From 3-8013	15				
64	500638	SCREW TP PAN PH #8x1/2 Z050	2				
NS	500470	WASHER LO SPT .193x.334x.047 Z050	AR				
65	313625	PILAR COVERING / FRONT W.C.L. DOOR	1				
66	313626	PILAR COVERING / BACKWARD W.C.L. DOOR	1				
70	312553P	PANEL, INTERIOR ASSY 868 MM	1				

From Y-7046 To 6-8906		Date:07/2024	PAGE:Y2-1836-00

PARCEL RACK

Item#	Part	Description	XLII 45	XLII MTH40	XLII MTH45	XLII MTH45E	NOTES
70	312456P	PANEL, INSIDE 1657MM	1				
70	Call order desk	PANEL, INSIDE 1657MM	1				P
70	Call order desk	PANEL, INSIDE #7 R.H. 1411MM	1				P
70	Call order desk	PANEL, INSIDE #8 L.H.	1				P
70	313437P	PANEL, INSIDE #5 R.H. / W/"RICON"	1				
70	313431P	PANEL, INSIDE #6 R.H. / W/"RICON"	1				
80	312427P	PANEL ASSY / W/O SPEAKER	1				
80	312429P	PANEL ASSY #2,3,4,5 & 6 L.H. & R.H.	9				
80	Call order desk	PANEL ASSY #7 R.H.	1				P
80	Call order desk	PANEL ASSY #8 L.H. To Y-7670	1				P
80	Call order desk	PANEL ASSY #8 L.H. From 1-7671	1				P
80	312428P	PANEL ASSY #1 W/SPEAKER HOLE	1				
80	313434P	PANEL ASSY # 5 R.H./ W/"RICON"	1				
80	313433P	PANEL ASSY # 6 R.H./ W/"RICON"	1				
90	312371	EXTRUSION, ALUMINIUM 6395MM / C.T.L.	1				
90	312528	EXTRUSION, REAR, ALUMINIUM 5850MM / S.C.C	1				
90	313228	EXTRUSION, REAR, ALUMINIUM 5685 MM	1				
90	313425	EXTRUSION, REAR, ALUMINIUM 2825 MM	1				
90	313427	EXTRUSION, REAR, ALUMINIUM 6370 MM	1				
90	313223	EXTRUSION, REAR, ALUMINIUM 4733 MM	1				
90	312528	EXTRUSION, REAR, ALUMINIUM 5850MM / S.C.C	1				
90	312530	EXTRUSION, REAR, ALUMINIUM 5773MM / S.C.C	1				
90	312532	EXTRUSION, ALUMINIUM 6395 MM	1				
90	312534	EXTRUSION, REAR, ALUMINIUM 4448 MM	1				
90	312535	EXTRUSION, REAR, ALUMINIUM 6450MM / S.C.C	1				
90	312536	EXTRUSION, REAR, ALUMINIUM 3913MM / S.C.C	1				
90	313228	EXTRUSION, REAR, ALUMINIUM 5685 MM	1				
90	313425	EXTRUSION, REAR, ALUMINIUM 2825 MM	1				
90	313427	EXTRUSION, REAR, ALUMINIUM 6370 MM	1				
90	313223	EXTRUSION, REAR, ALUMINIUM 4733 MM	1				
NS	312511	PLATE, JUNCTION / EXTRUSION RETAINER	2				
91	312372	EXTRUSION, ALUMINIUM 6395MM / C.T.L.	1				
91	312525	EXTRUSION, ALUMINIUM 5850MM / S.C.C	2				
91	313225	EXTRUSION, ALUMINIUM 4733 MM	1				
91	313227	EXTRUSION, ALUMINIUM 5685 MM	1				
91	313426	EXTRUSION, ALUMINIUM 6370 MM To 1-7615	1				
91	313580	EXTRUSION, ALUMINIUM 6370 MM From 1-7616	1				
91	312525	EXTRUSION, ALUMINIUM 5850MM / S.C.C	1				
91	312526	EXTRUSION, ALUMINIUM 5773MM / S.C.C	1				
91	312527	EXTRUSION, ALUMINIUM 6395MM / S.C.C	1				
91	312531	EXTRUSION, ALUMINIUM 6450MM To 1-7615	1				
91	313582	EXTRUSION, ALUMINIUM 6450MM / S.C.C From 1-7616	1				

From Y-7046 To 6-8906		Date:07/2024	PAGE:Y2-1836-00

PARCEL RACK

Item#	Part	Description	XLII 45	XLII MTH40	XLII MTH45	XLII MTH45E	NOTES
91	312533	EXTRUSION ALUMINUM 3913MM / S.C.C To 1-7615	1				
91	313583	EXTRUSION, ALUMINIUM 3913 MM From 1-7616	1				
91	312538	EXTRUSION, ALUMINIUM 5148MM / S.C.C	1				
91	313227	EXTRUSION, ALUMINIUM 5685 MM	1				
91	313424	EXTRUSION ALUMINUM 2825MM To 1-7615	1				
91	313579	EXTRUSION, ALUMINIUM 2825 MM From 1-7616	1				
91	313426	EXTRUSION, ALUMINIUM 6370 MM	1				
91	313225	EXTRUSION, ALUMINIUM 4733 MM	1				
92	**Y2-0655-00**	**INTERIOR LIGHTING**					
93	312720P	PANEL 427MM	1				
93	312721P	PANEL 279MM	1				
93	312722P	PANEL 605MM	1				
93	312723P	PANEL 525MM	1				
93	312724P	PANEL 343MM	1				
93	312725P	PANEL 510MM	1				
93	Call order desk	PANEL 366MM	1				P
93	312728P	PANEL 500MM	1				
93	312729P	PANEL 356MM	1				
93	312730P	PANEL 478MM	1				
93	Call order desk	PANEL 631MM	1				P
93	312733P	PANEL 447MM	1				
93	312734P	PANEL 299 MM	1				
93	312735P	PANEL 402MM	1				
93	312736P	PANEL 248MM	1				
93	312737P	PANEL 542MM	1				
93	312738P	PANEL 773MM	1				
93	312739P	PANEL 550MM	1				
93	Call order desk	PANEL 292MM	1				P
93	312741P	PANEL 538MM	1				
93	312742P	PANEL 763MM	1				
93	Call order desk	PANEL 529MM	1				P
93	312745P	PANEL 472MM	1				
93	312746P	PANEL 705MM	1				
93	312747P	PANEL 454MM	1				
93	312748P	PANEL 700MM	1				
93	312749P	PANEL 421MM	1				
93	Call order desk	PANEL 747MM	1				P
93	312751P	PANEL 408MM	1				
93	312752P	PANEL 484MM	1				
93	312756P	PANEL 575MM	1				
93	312757P	PANEL 598MM	1				
93	312759P	PANEL 711MM	1				

From Y-7046 To 6-8906		Date:07/2024	PAGE:Y2-1836-00

PARCEL RACK

Item#	Part	Description	XLII 45	XLII MTH40	XLII MTH45	XLII MTH45E	NOTES
93	312760P	PANEL 269MM	1				
93	312761P	PANEL 315MM	1				
93	312762P	PANEL 310MM	1				
93	Call order desk	PANEL 352MM	1				P
93	312764P	PANEL 325MM	1				
93	312765P	PANEL 731MM	1				
93	312766P	PANEL 590MM	1				
93	312767P	PANEL 457MM	1				
93	Call order desk	PANEL 741MM	1				P
93	312770P	PANEL 759MM	1				
93	312771P	PANEL 495MM	1				
93	312774P	PANEL 431MM	1				
93	312839P	PANEL 375MM	1				
93	312840P	PANEL 753MM	1				
93	Call order desk	PANEL 722MM	1				P
93	312946P	PANEL 437MM	1				
93	312971P	PANEL 51MM	1				
93	313076P	PANEL 490MM	1				
93	313077P	PANEL 253MM	1				
93	Call order desk	PANEL 243MM	1				P
93	313079P	PANEL 716MM	1				
93	Call order desk	PANEL 213MM	1				P
93	313328P	PANEL 388MM	1				
93	313333P	PANEL 415MM	1				
93	Call order desk	PANEL 73MM	1				P
93	Call order desk	PANEL 80MM	1				P
93	313682P	PANEL 100MM	1				
93	Call order desk	PANEL 114MM	1				P
93	Call order desk	PANEL 149MM	1				P
93	Call order desk	PANEL 158MM	1				P
93	315936P	PANEL 166MM	1				
93	Call order desk	PANEL 181MM	1				P
93	315913P	PANEL 184MM	1				
93	313330P	PANEL 193MM	1				
93	315940P	PANEL 226MM	1				
93	Call order desk	PANEL 231MM	1				P
93	313334P	PANEL 235MM	1				
93	Call order desk	PANEL 264MM	1				P
93	315923P	PANEL 289MM	1				
93	316018P	PANEL 304MM	1				
93	313075P	PANEL 335MM	1				
93	Call order desk	PANEL 370MM	1				P

From Y-7046 To 6-8906		Date:07/2024	PAGE:Y2-1836-00

PARCEL RACK

Item#	Part	Description	XLII 45	XLII MTH40	XLII MTH45	XLII MTH45E	NOTES
93	Call order desk	PANEL 391MM	1				P
93	Call order desk	PANEL 396MM	1				P
93	310617P	PANEL 440MM	1				
93	312975P	PANEL 465MM	1				
93	312835P	PANEL 475MM	1				
93	Call order desk	PANEL 516MM	1				P
93	Call order desk	PANEL 553MM	1				P
93	313335P	PANEL 559MM	1				
93	Call order desk	PANEL 560MM	1				P
93	313125P	PANEL 565MM	1				
93	315952P	PANEL 570MM	1				
93	315884P	PANEL 582MM	1				
93	315945P	PANEL 601MM	1				
93	313414P	PANEL 615MM	1				
93	Call order desk	PANEL 625MM	1				P
93	Call order desk	PANEL 636MM	1				P
93	Call order desk	PANEL 646MM	1				P
93	310653P	PANEL 655MM / 382MM POSITION SCREEN / L.H. W/10" LCD SCREEN	1				
93	310654P	PANEL 655MM / 382MM POSITION SCREEN / R.H. W/ LCD SCREEN	1				
93	315983P	PANEL 655MM	1				
93	Call order desk	PANEL 656MM	1				P
93	Call order desk	PANEL 660MM	1				P
93	Call order desk	PANEL 672MM	1				P
93	Call order desk	PANEL 674MM	1				P
93	Call order desk	PANEL 682MM	1				P
93	Call order desk	PANEL 686MM	1				P
93	Call order desk	PANEL 690MM	1				P
93	Call order desk	PANEL 723MM	1				P
93	Call order desk	PANEL 725MM	1				P
93	Call order desk	PANEL 788MM	1				P
93	Call order desk	PANEL 802MM	1				P
93	Call order desk	PANEL 811MM	1				P
93	Call order desk	PANEL 819MM	1				P
93	Call order desk	PANEL 836MM	1				P
93	Call order desk	PANEL 843MM	1				P
93	Call order desk	PANEL 850MM	1				P
93	313617P	PANEL 866MM	1				
93	315929P	PANEL 878MM	1				
93	Call order desk	PANEL 885MM	1				P
93	Call order desk	PANEL 905MM	1				P
93	Call order desk	PANEL 924MM	1				P
93	Call order desk	PANEL 936MM	1				P

From Y-7046 To 6-8906		Date:07/2024	PAGE:Y2-1836-00

PARCEL RACK

Item#	Part	Description	XLII 45	XLII MTH40	XLII MTH45	XLII MTH45E	NOTES
93	315904P	PANEL 940MM	1				
93	Call order desk	PANEL 990MM	1				P
93	Call order desk	PANEL 1123MM	1				P
93	Call order desk	PANEL 1360MM	1				P
93	Call order desk	PANEL 1379MM	1				P
93	Call order desk	PANEL 1481MM	1				P
93	Call order desk	PANEL 1549MM	1				P
94	312370	HAND RAIL / EXTRUSION 4190 MM	1				
94	312518	HAND RAIL / EXTRUSION 4190 MM	1				
94	313069	HAND RAIL / EXTRUSION 3075 MM	1				
94	313072	HAND RAIL / EXTRUSION 1660 MM	1				
94	313229	HAND RAIL / EXTRUSION 2365 MM	1				
94	313423	HAND RAIL / EXTRUSION 2825 MM	1				
94	312814	HAND RAIL / EXTRUSION W/HOLE 3320 MM	1				
94	313428	HAND RAIL / EXTRUSION W/HOLE 2180 MM	1				
94	312518	HAND RAIL / EXTRUSION 4190 MM	1				
94	312520	HAND RAIL / EXTRUSION 4113 MM	1				
94	312521	HAND RAIL / EXTRUSION 4735 MM	1				
94	313582	EXTRUSION, ALUMINIUM 6450MM / S.C.C	1				
94	312522	HAND RAIL / EXTRUSION 2808 MM	1				
94	312523	HAND RAIL / EXTRUSION W/HOLE 2260 MM	1				
94	312524	HAND RAIL / EXTRUSION 3913 MM	1				
94	312543	HAND RAIL / EXTRUSION 2867 MM	1				
94	312814	HAND RAIL / EXTRUSION W/HOLE 3320 MM	1				
94	312815	HAND RAIL / EXTRUSION W/HOLE 3320 MM	1				
94	312816	HAND RAIL / EXTRUSION W/HOLE 4190 MM	1				
94	313072	HAND RAIL / EXTRUSION 1660 MM	1				
94	313229	HAND RAIL / EXTRUSION 2365 MM	1				
94	313423	HAND RAIL / EXTRUSION 2825 MM	1				
94	313428	HAND RAIL / EXTRUSION W/HOLE 2180 MM	1				
95	064563	CABLE HARNESS / IND LIGHT R.H. / W/O DOOR	1				
95	064565	CABLE HARNESS / IND LIGHT L.H. / W/O DOOR	1				
95	064562	CABLE HARNESS / IND LIGHT R.H. / W/DOOR	1				
95	064564	CABLE HARNESS / IND LIGHT L.H. / W/DOOR	1				
95	064712	CABLE ASSY IND LIGHT R.H. / W/DOOR & "RICON"	1				
95	064564	CABLE HARNESS / IND LIGHT L.H. / W/DOOR	1				
95	064562	CABLE HARNESS / IND LIGHT R.H. / W/DOOR	1				
95	064713	CABLE ASSY IND LIGHT R.H. / W/DOOR & "RICON"	1				
96	064560	CABLE ASSY / DIRECT LIGHT & SPEAKER L.H.	1				
96	065091	CABLE ASSY / DIRECT LIGHT & SPEAKER R.H.	1				
96	064710	CABLE ASSY SIDE LIGHT R.H. / FRONT W/"RICON" To Y-7670	1				
96	065496	CABLE ASSY SIDE LIGHT R.H. / FRONT W/"RICON" From 1-7671	1				

From Y-7046 To 6-8906		Date:07/2024	PAGE:Y2-1836-00

PARCEL RACK

Item#	Part	Description	XLII 45	XLII MTH40	XLII MTH45	XLII MTH45E	NOTES
96	065351	CABLE ASSY SIDE LIGHT R.H. / REAR W/"RICON"	1				
97	065182	CABLE ASSY / READING LIGHT STREETSIDE	1				
97	065183	CABLE ASSY / READING LIGHT CURBSIDE	1				
NS	065352	CABLE ASSY READING LIGHT R.H. / FRONT W/"RICON" To 2-7866	1				
NS	065671	CABLE ASSY READING LIGHT R.H. / FRONT W/"RICON" From 2-7867	1				
97	064847	CABLE ASSY READING LIGHT R.H. / REAR W/"RICON"	1				
100	**Y2-1837-00**	**CEILING PANELS & MOULDING - BUS**					
101	500183	SCREW CAP HEX 5/16-18x1 1/2 G5 PT Z050 To 3-7990	AR				
101	502927	SCREW CAP HEX M8-1.25x50 G8.8 N500 From 3-7991	AR				
102	500476	WASHER LO SPT .317x.586x.078 Z050	AR				
103	312367	FIXING PLATE	18				
104	500638	SCREW TP PAN PH #8x1/2 Z050	18				
105	313003	SPACER	18				
106	502523	RIVET NUT FL OKS 5/16-18 .059-.119 To 3-7990	18				
106	5001337	NUT INS FL HEX M8-1.25 0.5-3.0 Z050 From 3-7991	18				
107	830153	TUBE / 32WATT / F32T8SPX41 - 48"	AR				
108	500583	SCREW TP PAN PH #6x1/2 Z050	AR				
NS	315891	ANGLE SUPPORT / (FIXED TO LAVATORY WALL) From 2-7923	1				A
110	MI03-02	SEE MAINTENANCE INFORMATION					
200	341120	SUPPORT DETECTOR MODULE TWU From 5-8606	1				
201	563592	MODULE ALARM DETECTOR W.C.L. TWU From 5-8606	1				
202	500518	SCREW MA BDG PH #4-40x1/2 Z050 From 5-8606	4				
203	500157	WASHER FL .125x.375x.032 SS From 5-8606	4				
204	500425	NUT HEX NYRT #4-40 SS From 5-8606	4				
205	500333	SCREW TP OV PH #6x3/4 BK From 5-8606	4				
206	500345	WASHER FN CKF .187x.500x.090 BR BK From 5-8606	4				
207	563945	LIGHT TWS W.C.L. From 5-8606	1				
		A) FIXED TO LAVATORY WALL					
		B) INCLUDE ALLS ITEMS 200 TO 20					
		F) FOR DOOR REPALCEMENT USE 1 EACH: 980027 (BALL STUD) ,502638 (FL WASHER) & 502847 (NUT)					
		M) SEE MAINTENANCE INFORMATION MI03-02					
		P) CALL ORDER DESK FOR SPECIFIC APPLICATION (V.I.N.)					

From Y-7046 To 6-8906		Date:07/2024	PAGE:Y2-1837-00
CEILING PANELS & MOULDING - BUS			

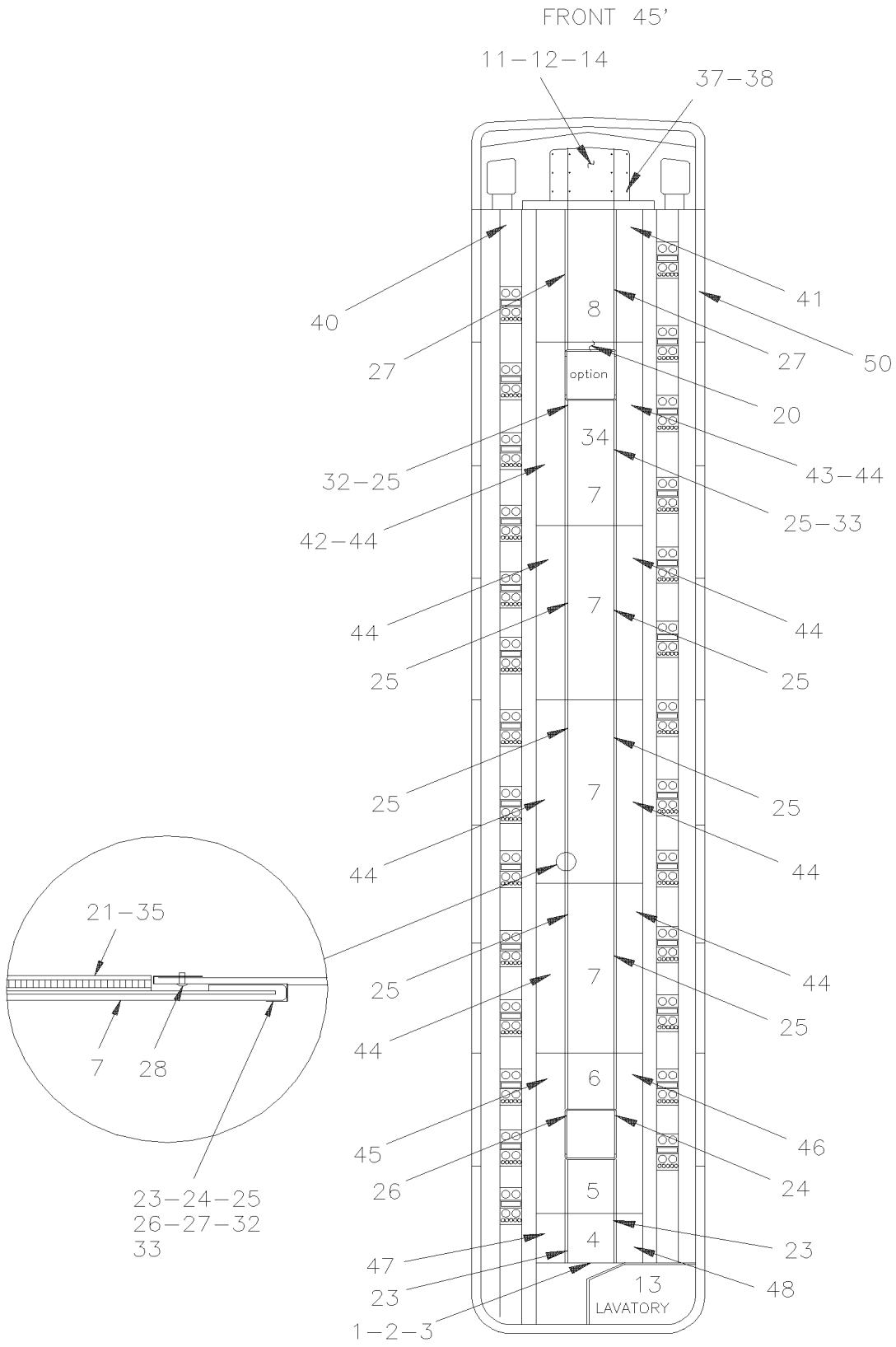

From Y-7046 To 6-8906		Date:07/2024	PAGE:Y2-1837-00

CEILING PANELS & MOULDING - BUS

Item#	Part	Description	XLII 45	XLII MTH40	XLII MTH45	XLII MTH45E	NOTES
1	341058	FINISHING ANGLE 344MM X 1660MM	1				
1	341059	FINISHING MOULDING W/TISSUS	1				
2	500552	SCREW TP OV PH #6x3/4 Z050	4				
3	500463	WASHER FN CKF .187x.500x.090 BR Z050	4				
4	Call order desk	CEILING PANEL ASSY	1				P
5	Call order desk	CEILING PANEL ASSY / W/EMERGENCY EXIT	1				P
6	Call order desk	CEILING PANEL ASSY / W/EMERGENCY EXIT	1				P
7	Call order desk	CEILING PANEL ASSY #2,3,4 & 5	1				P
8	Call order desk	CEILING PANEL ASSY #1	1				P
11	Call order desk	CEILING PANEL ASSY / FRONT / 642MM WIDE To 6-8892	1				P
11	Call order desk	CEILING PANEL ASSY / FRONT / 642MM WIDE From 6-8893	1				P
11	341115P	CEILING PANEL ASSY / FRONT / W/FLAT SCREEN 10" / 642MM WIDE To 6-8892	1				
11	Call order desk	CEILING PANEL ASSY / FRONT / W/FLAT SCREEN 15" / 642MM WIDE To 6-8892	1				P
12	Call order desk	CEILING PANEL ASSY / FRONT / 870MM WIDE To 6-8892	1				P
12	Call order desk	CEILING PANEL ASSY / FRONT / 870MM WIDE From 6-8893	1				P
12	341116P	CEILING PANEL ASSY / FRONT / 870MM WIDE / W/FLAT SCREEN 10" To 6-8892	1				
12	Call order desk	CEILING PANEL ASSY / FRONT / 870MM WIDE / W/FLAT SCREEN 15" To 6-8892	1				P
13	341042	CEILLING PANEL / LAVATORY To 2-7922	1				
13	341090P	CEILLING PANEL / LAVATORY From 2-7923	1				
14	504107	RIVET POP DOME OE 1/8x5/16 AL	14				
20	340983P	CEILING PANEL ASSY / SMALL W/EMERGENCY EXIT / (USED W/ITEM # 34 ONLY)	1				
. NS	313018	. CEILING PANEL 222MM x 640MM	1				
21	341021	TAPE DUAL LOCK 2" x 530MM / BLACK SJ3541	AR				
23	313180	FINISHING MOULDING "J" 628MM SS To 2-7833	2				
23	313653	FINISHING MOULDING "J" GREY / 628MM From 2-7834	2				
24	313179	FINISHING MOULDING "J" W/EMERGENCY 1943MM SS To 2-7833	1				
24	313652	FINISHING MOULDING "J" W/EMERGENCY / 1943MM From 2-7834	1				
25	313183	FINISHING MOULDING "J" 1943MM SS To 2-7833	8				
25	313656	FINISHING MOULDING "J" GREY / 1943MM From 2-7834	8				
26	313182	FINISHING MOULDING "J" W/EMERGENCY 1943MM SS To 2-7833	1				
26	313655	FINISHING MOULDING "J" W/EMERGENCY / 1943MM From 2-7834	1				
27	313166	FINISHING MOULDING "J" 1279MM SS To 2-7833	2				
27	313648	FINISHING MOULDING "J" GREY / 1279MM From 2-7834	2				
28	504339	RIVET POP DOME OE 1/8x3/8 SS	42				
29	506466	TAPE RUB ADH1 CC POL 1/16" x 1 1/2" x 100 / GREY 2520	AR				
32	313169	FINISHING MOULDING "J" W/EMERGENCY 1943MM SS To 2-7833	1				
32	313651	FINISHING MOULDING "J" W/EMERGENCY / 1943MM From 2-7834	1				
33	313168	FINISHING MOULDING "J" W/EMERGENCY 1943MM SS To 2-7833	1				
33	313650	FINISHING MOULDING "J" W/EMERGENCY / 1943MM From 2-7834	1				
34	Call order desk	CEILING PANEL ASSY	1				P A
35	340988	TAPE DUAL LOCK 2" x 178MM / BLACK SJ3541	22				
37	328910	FINISHING MOULDING "J" SHAPE To 2-7824	2				

From Y-7046 To 6-8906		Date:07/2024	PAGE:Y2-1837-00

CEILING PANELS & MOULDING - BUS

Item#	Part	Description	XLII 45	XLII MTH40	XLII MTH45	XLII MTH45E	NOTES
37	313657	FINISHING MOULDING "J" SHAPE From 2-7825	2				
38	504339	RIVET POP DOME OE 1/8x3/8 SS	4				
40	Call order desk	CEILING PANEL ASSY #1 L.H.	1				P
41	Call order desk	CEILING PANEL ASSY #1 R.H.	1				P
42	Call order desk	CEILING PANEL ASSY / W/EMERGENCY EXIT / FRONT	1				P
43	Call order desk	CEILING PANEL ASSY / W/EMERGENCY EXIT / FRONT	1				P
44	Call order desk	CEILING PANEL ASSY #2-3-4 & 5	1				P
45	Call order desk	CEILING PANEL ASSY / W/EMERGENCY EXIT / REAR	1				P
46	313170P	CEILING PANEL ASSY / W/EMERGENCY EXIT / REAR	1				
47	313226	CEILING PANEL #8 L.H.	1				
48	Call order desk	CEILING PANEL ASSY #7 R.H.	1				P
50	**Y2-1833-00**	**WINDOW FINISHING CAP & WALL**					
		A) WITH EMERGENCY EXIT					
		P) CALL ORDER DESK FOR SPECIFIC APPLICATION (V.I.N.)					

From Y-7046 To 8-9339		Date:07/2024	PAGE:Y2-1837-50
CEILING PANELS & MOULDING - MTH			

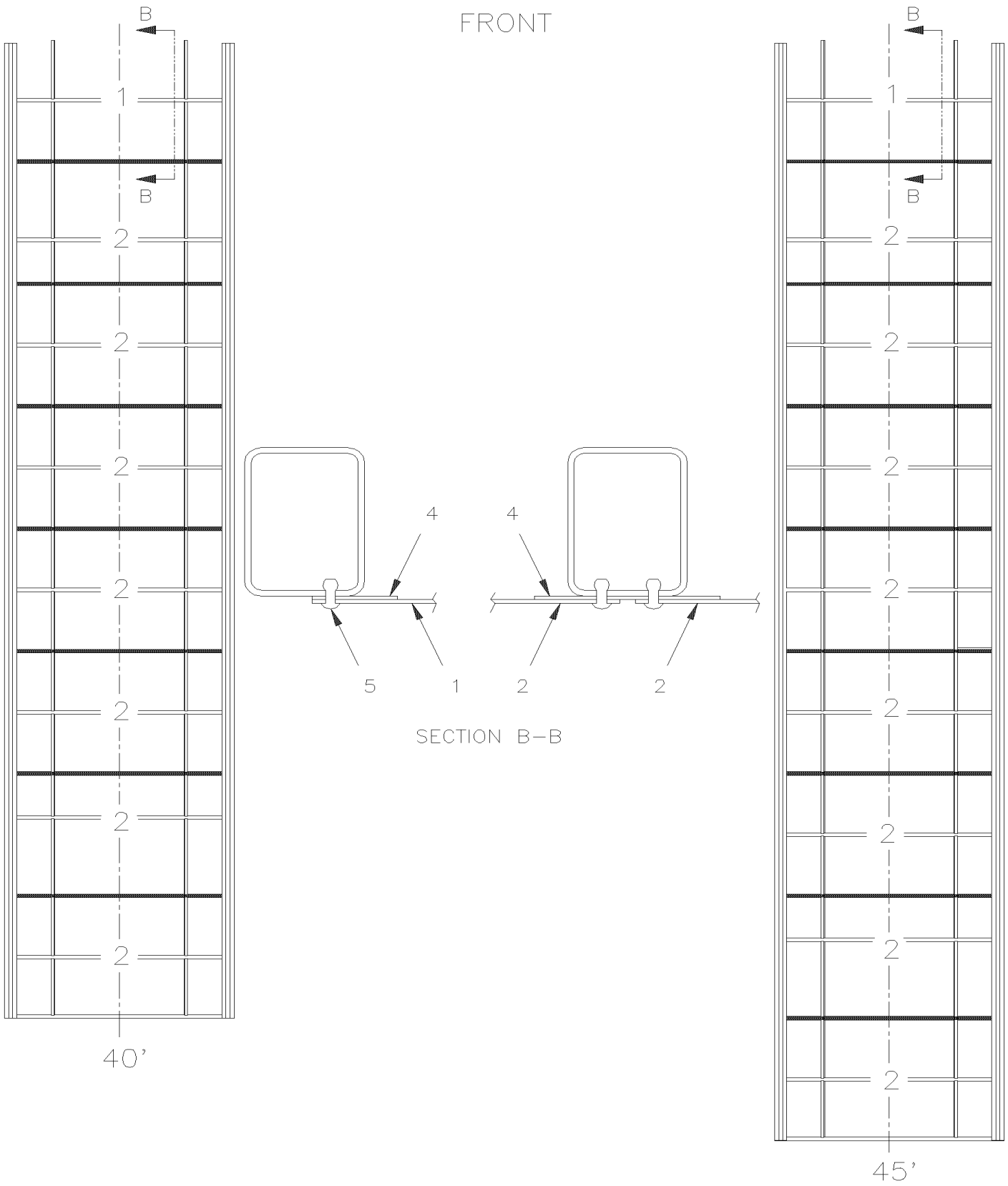

From Y-7046 To 8-9339		Date:07/2024	PAGE:Y2-1837-50

CEILING PANELS & MOULDING - MTH

Item#	Part	Description	XLII 45	XLII MTH40	XLII MTH45	XLII MTH45E	NOTES
1	341075	CEILLING PANEL #1		1	1	1	
1	341095	CEILLING PANEL #1 / W/SLIDE-OUT			1		
2	341074	CEILLING PANEL		7			
2	341096	CEILLING PANEL #2,3 & 4 / W/SLIDE-OUT			7		
2	341074	CEILLING PANEL			8	8	
4	506466	TAPE RUB ADH1 CC POL 1/16" x 1 1/2" x 100 / GREY 2520		2	2	2	
5	504339	RIVET POP DOME OE 1/8x3/8 SS		AR	AR	AR	

From Y-7046 To 6-8906		Date:07/2024	PAGE:Y2-1838-00
FLOOR - BUS			

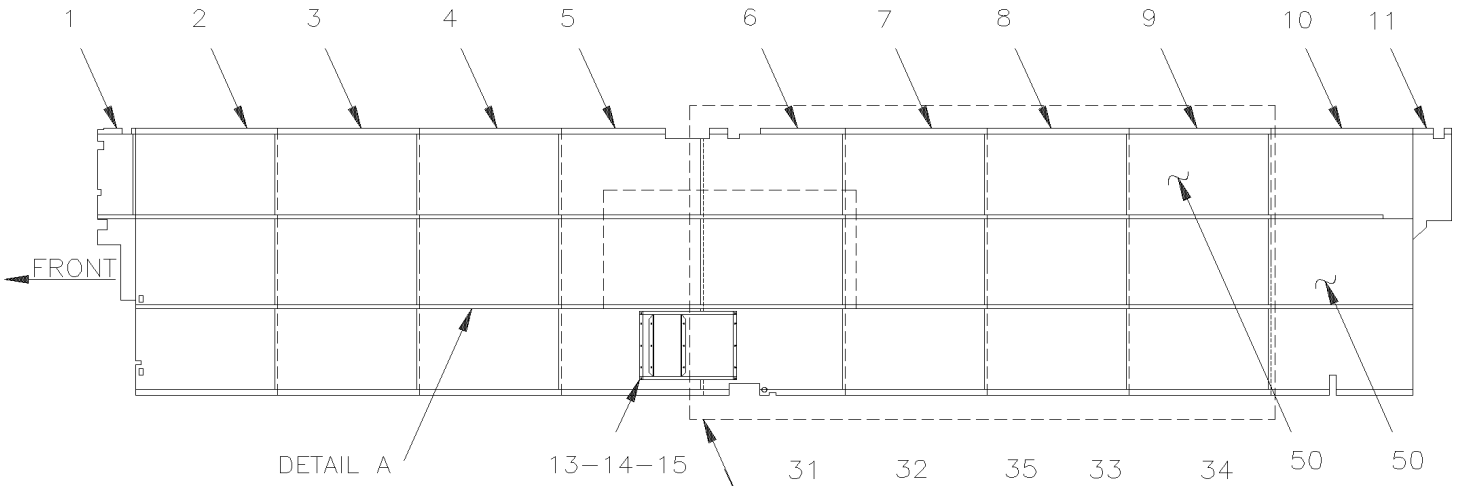

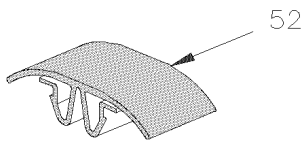

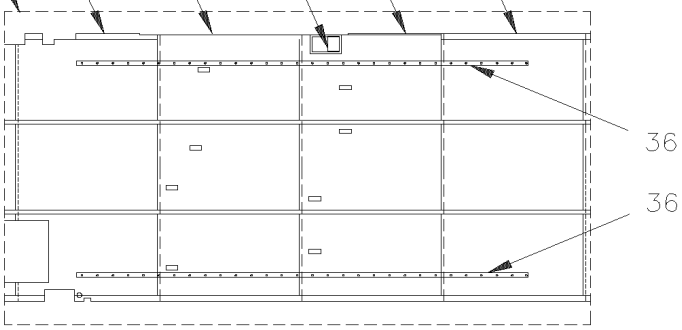

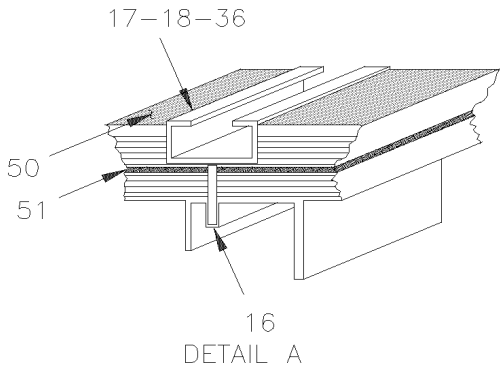

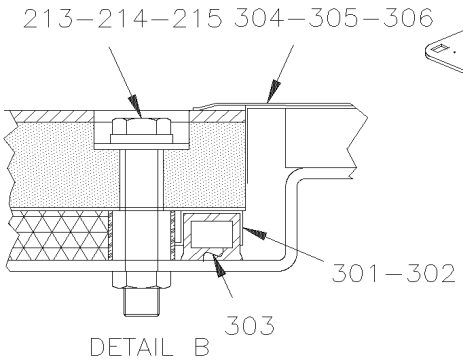

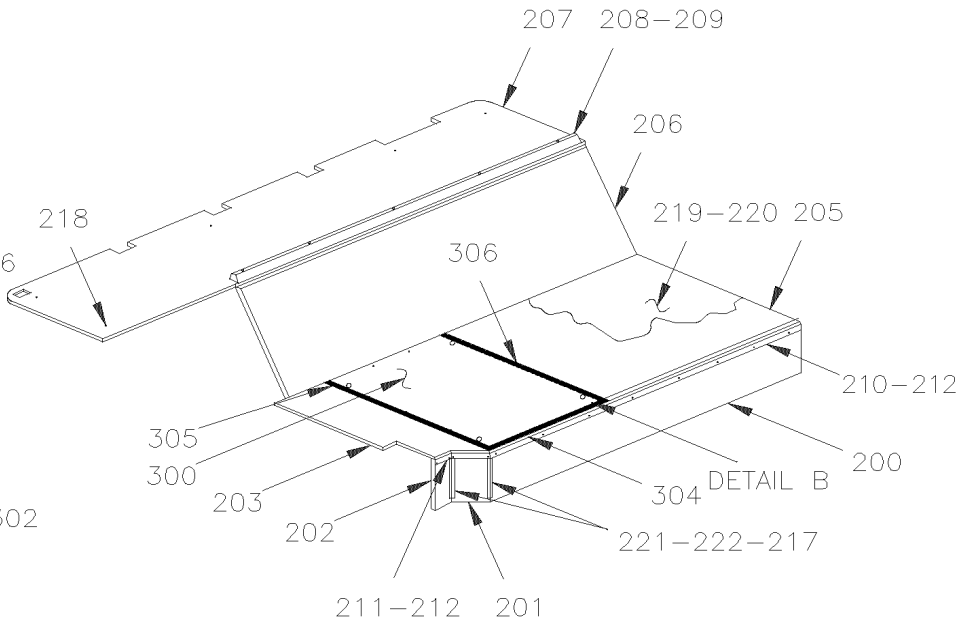

From Y-7046 To 6-8906		Date:07/2024	PAGE:Y2-1838-00

FLOOR - BUS

Item#	Part	Description	XLII 45	XLII MTH40	XLII MTH45	XLII MTH45E	NOTES
1	Call order desk	FLOOR / W/STD SEAT To Y-7348	1				P
1	Call order desk	FLOOR / W/STD SEAT From Y-7349	1				P
1	Call order desk	FLOOR / W/1 V.I.P. PASSENGER CURBSIDE From Y-7349	1				P
2	Call order desk	FLOOR / W/STD SEAT To Y-7348	1				P
2	Call order desk	FLOOR / W/STD SEAT From Y-7349	1				P
2	Call order desk	FLOOR / W/1 V.I.P. PASSENGER CURBSIDE From Y-7349	1				P
3	324877P	FLOOR / W/STD SEAT To Y-7348	1				
3	Call order desk	FLOOR / W/STD SEAT From Y-7349	1				P
3	Call order desk	FLOOR / W/1 V.I.P. PASSENGER CURBSIDE From Y-7349	1				P
3	Call order desk	FLOOR / W/STD SEAT From Y-7349	1				P A
4	324877P	FLOOR / W/STD SEAT To Y-7348	1				
4	Call order desk	FLOOR / W/STD SEAT From Y-7349	1				P
4	Call order desk	FLOOR / W/1 V.I.P. PASSENGER CURBSIDE From Y-7349	1				P
4	Call order desk	FLOOR / W/STD SEAT From Y-7349	1				P A
5	Call order desk	FLOOR / W/STD SEAT To Y-7348	1				P
5	Call order desk	FLOOR / W/STD SEAT From Y-7349	1				P
5	Call order desk	FLOOR / W/1 V.I.P. PASSENGER CURBSIDE From Y-7349	1				P
5	Call order desk	FLOOR / W/STD SEAT From Y-7349	1				P A
6	Call order desk	FLOOR / W/STD SEAT From Y-7349	1				P
6	Call order desk	FLOOR / W/1 V.I.P. PASSENGER CURBSIDE From Y-7349	1				P
7	324877P	FLOOR / W/STD SEAT To Y-7348	1				
7	Call order desk	FLOOR / W/STD SEAT From Y-7349	1				P
7	Call order desk	FLOOR / W/STD SEAT From Y-7349	1				P A
7	Call order desk	FLOOR / W/1 V.I.P. PASSENGER CURBSIDE From Y-7349	1				P
8	324847P	FLOOR / W/STD SEAT To Y-7348	1				
8	Call order desk	FLOOR / W/STD SEAT From Y-7349	1				P
8	Call order desk	FLOOR / W/1 V.I.P. PASSENGER CURBSIDE From Y-7349	1				P
9	324847P	FLOOR / W/STD SEAT To Y-7348	1				
9	Call order desk	FLOOR / W/STD SEAT From Y-7349	1				P
9	Call order desk	FLOOR / W/1 V.I.P. PASSENGER CURBSIDE From Y-7349	1				P
10	Call order desk	FLOOR / W/STD SEAT To Y-7348	1				P
10	Call order desk	FLOOR / W/STD SEAT From Y-7349	1				P
10	Call order desk	FLOOR / W/1 V.I.P. PASSENGER CURBSIDE From Y-7349	1				P
11	Call order desk	FLOOR / W/STD SEAT To Y-7348	1				P
11	Call order desk	FLOOR / W/STD SEAT From Y-7349	1				P
12	324479	FLOOR / W/STD SEAT To Y-7348	1				
12	327379	PANEL / FIRE WALL From Y-7349	1				
NS	508068	VENEER PLYWOOD / 1/2" THICK 4' X 8' To Y-7348	AR				
NS	508392	VENEER PLYWOOD / 7/16" THICK 4` X 8`	AR				
13	Call order desk	BOX ASSY / AIR RETURN	1				P
14	500640	SCREW TP PAN PH #6x3/4 Z050	8				
15	680065	TAPE COMPOUND / BLACK / 1/32" X 1" X 33' / L163-2400	AR				

From Y-7046 To 6-8906		Date:07/2024	PAGE:Y2-1838-00

FLOOR - BUS

Item#	Part	Description	XLII 45	XLII MTH40	XLII MTH45	XLII MTH45E	NOTES
16	5001533	SCREW TC FL PH #10-24x1 1/4 Z050 SS410	AR				
17	326759	SEAT TRACK 6096MM To 5-8392	2				
17	329149	SEAT TRACK 10695MM From 5-8393	1				
18	326760	SEAT TRACK 4599MM To 5-8392	2				
18	329149	SEAT TRACK 10695MM From 5-8393	1				
19	680093	SEALANT TAPE BUTYL / GREY / 1/16"x1 1/2"x50' /71079B11760	AR				
20	5001535	SCREW DR WF RO #14x1 3/4 Z050	AR				
31	Call order desk	PANEL FLOOR	1				P
32	Call order desk	PANEL FLOOR	1				P
33	Call order desk	PANEL FLOOR	1				P
34	Call order desk	PANEL FLOOR	1				P
35	Call order desk	PANEL ACCESS	1				P
36	327474	SEAT TRACK 3651MM To 5-8392	1				
36	329150	SEAT TRACK 3651MM From 5-8393	2				
50	**Y2-1838-05**	**FLOOR & COVERING - "R.C.A."**					
50	**Y2-1838-10**	**FLOOR COVERING - "TARAFLEX"**					
51	850027	INSULATING PAD NOISE ADH2 1/16" x 39" x 48"	AR				
52	323654	SEAT TRACK COVER 12' / EACH SEAT / W/COVERING FLOOR	AR				
52	323963	SEAT TRACK COVER 8' / EACH SEAT / W/COVERING FLOOR	AR				
NS	324791	MOULDING CARPET PROTECTOR / W/CARPET ON FLOOR / 29MM X 2438MM SS	AR				
NS	820027	HANDLE	AR				W
52	5001119	SCREW TP BDG PH #8x3/4 SS	AR				W
52	502630	WASHER FL .156x.375x.049 Z050	AR				W
200	324939	PANEL FRONT SEAT To Y-7348	1				
200	328798	PANEL FRONT SEAT From Y-7349	1				
201	324124	PANEL FRONT SEAT To Y-7348	1				
201	328799	PANEL FRONT SEAT From Y-7349	1				
202	324125	PANEL FRONT SEAT To Y-7348	1				
202	328800	PANEL FRONT SEAT From Y-7349	1				
203	324928	PANEL SEAT To Y-7348	1				
203	328801	PANEL SEAT From Y-7349	1				
205	324927	PANEL SEAT To Y-7348	1				
205	328797	PANEL SEAT From Y-7349	1				
206	326822	PANEL SEAT To Y-7348	1				
206	328796	PANEL SEAT From Y-7349	1				
207	326823	PANEL SEAT To Y-7348	1				
207	328795	PANEL REAR SEAT From Y-7349	1				
207	328133	PANEL SEAT	1				O
208	324423	STOPPER, SEAT	1				
209	500436	SCREW TP OV PH #10x2 Z050	5				
210	325190	ANGLE FINISHING	1				
211	325189	ANGLE FINISHING	1				

From Y-7046 To 6-8906		Date:07/2024	PAGE:Y2-1838-00

FLOOR - BUS

Item#	Part	Description	XLII 45	XLII MTH40	XLII MTH45	XLII MTH45E	NOTES
212	5001085	SCREW TP PAN PH #6x1 1/4 Z050	12				
213	500186	SCREW CAP HEX 5/16-18x2 1/2 G5 Z050	4				
214	500985	WASHER FL .343x.875x.125 Z050	4				
215	471119	SEAL WASHER / RUB RAIL & PANEL	4				
216	680532	SEALANT SIKA #221 / GREY / 310ml CARTRIDGE	1				
217	500618	SCREW TP FL PH #10x1 Z050	40				
218	500940	SCREW TP FL PH #10x2 Z050	17				
219	326949	OZITE 1730MM X 1860MM	1				
220	680030	ADHESIVE ADCHEM #EC847 / 1 Liter	1				
221	401500	ANGLE FINISHING	2				
222	500640	SCREW TP PAN PH #6x3/4 Z050	12				
300	328772P	PANEL ASSY / ENGINE ACCESS	1				
. NS	320037	. WEATHERSTRIP RUBBER ASSY	1				
301	328752	. MOULDING SIDE WEATHERSTRIP RETAINER	2				
302	324889	. MOULDING	2				
303	328761	. WEATHERSTRIP RUBBER ASSY	1				
. NS	485610	. . WEATHERSTRIP RUBBER / ADH / RAW MATERIAL	AR				
. NS	483941	. . WEATHERSTRIP RUBBER / ADH / RAW MATERIAL	AR				
303	320037	. WEATHERSTRIP RUBBER ASSY	1				
304	324904	. MOULDING	1				
305	328776	. MOULDING	1				
306	328759	. MOULDING	1				
		A) FLOOR WITH PRESSURISATION SYSTEM					
		O) WITH DAMPER AIR TRAP #453887					
		W) USE WITH W.C.L. SEAT TRACK					
		P) CALL ORDER DESK FOR SPECIFIC APPLICATION (V.I.N.)					

From Y-7046 To 6-8906		Date:07/2024	PAGE:Y2-1838-05
FLOOR & COVERING - "R.C.A."			

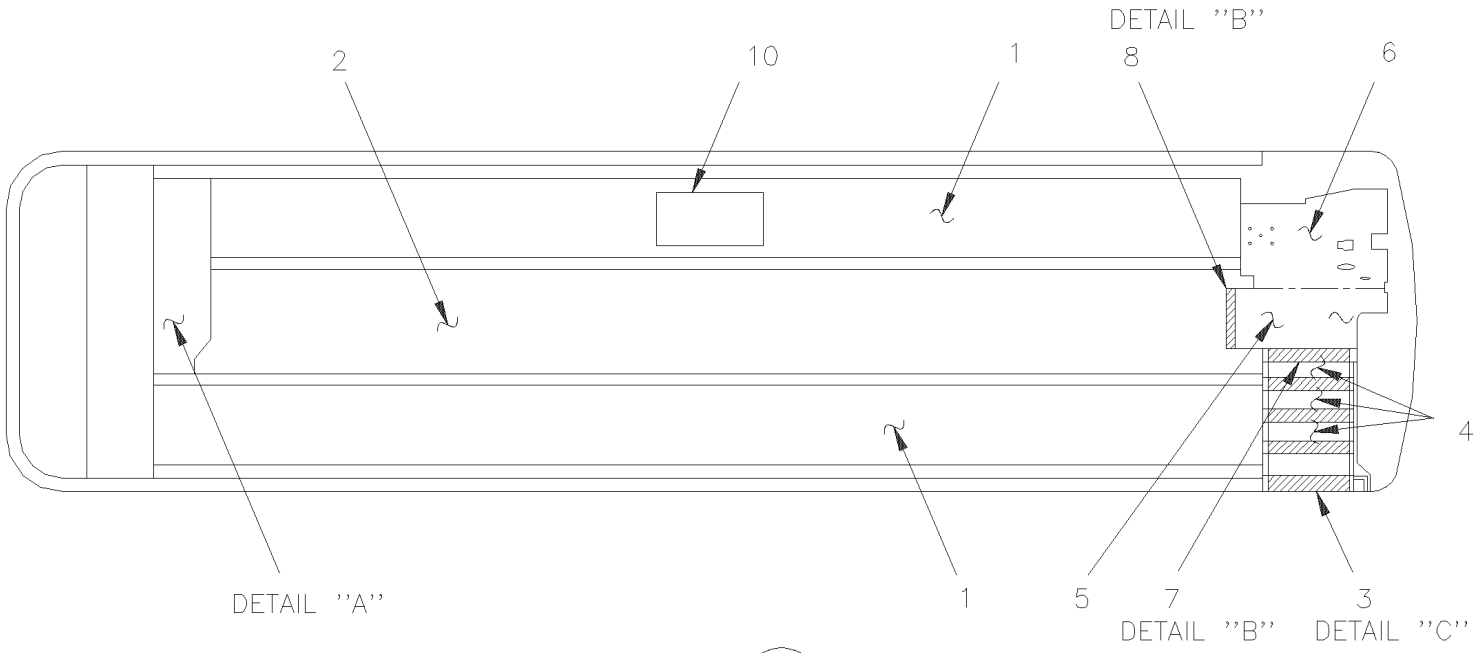

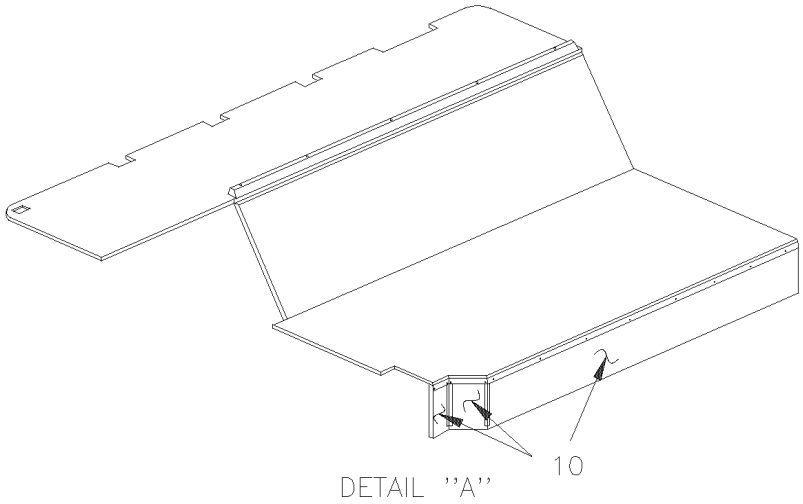

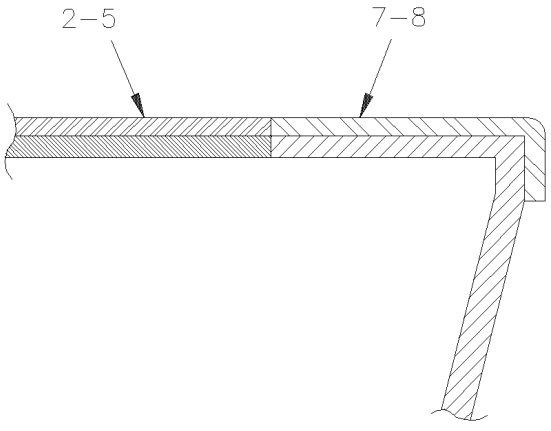

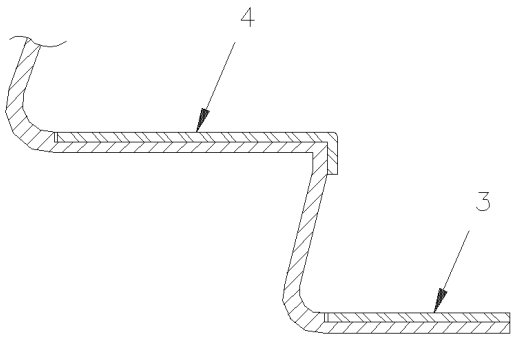

From Y-7046 To 6-8906		Date:07/2024	PAGE:Y2-1838-05

FLOOR & COVERING - "R.C.A."

Item#	Part	Description	XLII 45	XLII MTH40	XLII MTH45	XLII MTH45E	NOTES
		FLOOR COVERING SIDE SECTION / 26 1/8" X 38'					
1	506710	COVERING / CODE "A" = 702	2				
1	506712	COVERING / CODE "B" = 777	2				
1	506714	COVERING / CODE "C" = 653	2				
1	506716	COVERING / CODE "D" = 747	2				
1	506718	COVERING / CODE "E" = 766	2				
1	506720	COVERING / CODE "F" = 604	2				
1	506722	COVERING / CODE "G" = 758	2				
1	5061026	COVERING / CODE "H" = 630	1				
1	506724	COVERING / CODE "I" = 895	2				
1	5061034	COVERING / CODE "J" = 466	1				
1	5060014	COVERING / CODE "K" = 852	1				
1	506726	COVERING / CODE "L" = 975	2				
1	506730	COVERING / CODE "Q" = 788	2				
1	5060059	COVERING / CODE "R" = 411	1				
		FLOOR COVERING AISLE SECTION / 36 3/8" X 38'					
2	506711	COVERING / CODE "A" = 702	1				
2	506713	COVERING / CODE "B" = 777	1				
2	506715	COVERING / CODE "C" = 653	1				
2	506717	COVERING / CODE "D" = 747	1				
2	506719	COVERING / CODE "E" = 766	1				
2	506721	COVERING / CODE "F" = 604	1				
2	506723	COVERING / CODE "G" = 758	1				
2	5061027	COVERING / CODE "H" = 630	1				
2	506725	COVERING / CODE "I" = 895	1				
2	5061035	COVERING / CODE "J" = 466	1				
2	5060015	COVERING / CODE "K" = 852	1				
2	506727	COVERING / CODE "L" = 975	1				
2	506729	COVERING / CODE "Q" = 788	1				
2	5060060	COVERING / CODE "R" = 411	1				
		STEP TREAD COVERING 1STEP/ 10"X25"5/8 (UNCUT)					
		AT THE BEGENNING OF					
		PART NUMBER 326936 + SUFFIX CODE "?" LETTER					
3	506951	STEP TREAD COVERING / CODE "A" = 702 / 10" X 25 5/8"	1				
3	506952	STEP TREAD COVERING / CODE "B" = 777 / 10" X 25 5/8"	1				
3	506953	STEP TREAD COVERING / CODE "C" = 653 / 10" X 25 5/8"	1				
3	506954	STEP TREAD COVERING / CODE "D" = 747 / 10" X 25 5/8"	1				

From Y-7046 To 6-8906		Date:07/2024	PAGE:Y2-1838-05

FLOOR & COVERING - "R.C.A."

Item#	Part	Description	XLII 45	XLII MTH40	XLII MTH45	XLII MTH45E	NOTES
3	506955	STEP TREAD COVERING / CODE "E" = 766 / 10" X 25 5/8"	1				
3	506956	STEP TREAD COVERING / CODE "F" = 604 / 10" X 25 5/8"	1				
3	506957	STEP TREAD COVERING / CODE "G" = 758 / 10" X 25 5/8"	1				
3	5061031	STEP TREAD COVERING / CODE "H" = 630 / 10" X 25 5/8"	1				
3	506958	STEP TREAD COVERING / CODE "I" = 895 / 10" X 25 5/8"	1				
3	5061040	STEP TREAD COVERING / CODE "J" = 466 / 10" X 25 5/8"	1				
3	5060020	STEP TREAD COVERING / CODE "K" = 852 / 10" X 25 5/8"	1				
3	506959	STEP TREAD COVERING / CODE "L" = 975 / 10" X 25 5/8"	1				
3	506960	STEP TREAD COVERING / CODE "Q" = 788 / 10" X 25 5/8"	1				
3	5060069	STEP TREAD COVERING / CODE "R" = 411 / 10" X 25 5/8"	1				
		STEP TREAD COVERING 2,3,4 STEP / 9"7/8 X 25"5/8					
4	506888	STEP TREAD COVERING / CODE "A" = 702 / 10" X 25 5/8"	3				
4	506889	STEP TREAD COVERING / CODE "B" = 777 / 10" X 25 5/8"	3				
4	506890	STEP TREAD COVERING / CODE "C" = 653 / 10" X 25 5/8"	3				
4	506891	STEP TREAD COVERING / CODE "D" = 747 / 10" X 25 5/8"	3				
4	506892	STEP TREAD COVERING / CODE "E" = 766 / 10" X 25 5/8"	3				
4	506893	STEP TREAD COVERING / CODE "F" = 604 / 10" X 25 5/8"	3				
4	506894	STEP TREAD COVERING / CODE "G" = 758 / 10" X 25 5/8"	3				
4	5061028	STEP TREAD COVERING / CODE "H" = 630 / 10" X 25 5/8"	1				
4	506895	STEP TREAD COVERING / CODE "I" = 895 / 10" X 25 5/8"	3				
4	5061038	STEP TREAD COVERING / CODE "J" = 466 / 10" X 25 5/8"	1				
4	5060016	STEP TREAD COVERING / CODE "K" = 852 / 10" X 25 5/8"	1				
4	506896	STEP TREAD COVERING / CODE "L" = 975 / 10" X 25 5/8"	3				
4	506897	STEP TREAD COVERING / CODE "Q" = 788 / 10" X 25 5/8"	3				
4	5060061	STEP TREAD COVERING / CODE "R" = 411 / 10" X 25 5/8"	1				
		FLOOR COVERING UPPER STEPWELL SECTION / 22" X 46"					
5	506926	COVERING / CODE "A" = 702	1				
5	506927	COVERING / CODE "B" = 777	1				
5	506928	COVERING / CODE "C" = 653	1				
5	506929	COVERING / CODE "D" = 747	1				
5	506930	COVERING / CODE "E" = 766	1				
5	506931	COVERING / CODE "F" = 604	1				
5	506932	COVERING / CODE "G" = 758	1				
5	5061029	COVERING / CODE "H" = 630	1				
5	506933	COVERING / CODE "I" = 895	1				
5	5061036	COVERING / CODE "J" = 466	1				
5	5060019	COVERING / CODE "K" = 852	1				
5	506934	COVERING / CODE "L" = 975	1				

From Y-7046 To 6-8906		Date:07/2024	PAGE:Y2-1838-05

FLOOR & COVERING - "R.C.A."

Item#	Part	Description	XLII 45	XLII MTH40	XLII MTH45	XLII MTH45E	NOTES
5	506935	COVERING / CODE "Q" = 788	1				
5	5060062	COVERING / CODE "R" = 411	1				
		FLOOR COVERING DRIVER'S SECTION / 29" X 48"½					
6	506898	COVERING / CODE "A" = 702	1				
6	506899	COVERING / CODE "B" = 777	1				
6	506900	COVERING / CODE "C" = 653	1				
6	506901	COVERING / CODE "D" = 747	1				
6	506902	COVERING / CODE "E" = 766	1				
6	506903	COVERING / CODE "F" = 604	1				
6	506904	COVERING / CODE "G" = 758	1				
6	5061029	COVERING / CODE "H" = 630	1				
6	506905	COVERING / CODE "I" = 895	1				
6	5061037	COVERING / CODE "J" = 466	1				
6	5060018	COVERING / CODE "K" = 852	1				
6	506906	COVERING / CODE "L" = 975	1				
6	506907	COVERING / CODE "Q" = 788	1				
6	5060063	COVERING / CODE "R" = 411	1				
7	506886	STEP NOSING WHITE / 3" X 27 1/2"	1				
8	506887	STEP NOSING WHITE / 3" X 22 1/2"	1				
		FLOOR COVERING FOR ENGINE TRAP REAR / 30" X 60"					
10	506457	COVERING / CODE "A" = 702	1				
10	506458	COVERING / CODE "B" = 777	1				
10	506459	COVERING / CODE "C" = 653	1				
10	506460	COVERING / CODE "D" = 747	1				
10	506461	COVERING / CODE "E" = 766	1				
10	506462	COVERING / CODE "F" = 604	1				
10	506583	COVERING / CODE "G" = 758	1				
10	5061032	COVERING / CODE "H" = 630	1				
10	506495	COVERING / CODE "I" = 895	1				
10	5061039	COVERING / CODE "J" = 466	1				
10	5060019	COVERING / CODE "K" = 852	1				
10	506590	COVERING / CODE "L" = 975	1				
10	506661	COVERING / CODE "Q" = 788	1				
10	5061120	COVERING / CODE "R" = 411	1				
NS	680028	GLUE / 15LITERS	AR				W
NS	684654	GLUE CONTACT "SCOTCH-GRIP" / 3M #1357-NEUTRAL 18.9 LITERS	AR				F
NS	684655	GLUE CONTACT "SCOTCH-GRIP" / 3M #1357-NEUTRAL 3.8 LITERS	AR				F

From Y-7046 To 6-8906		Date:07/2024	PAGE:Y2-1838-05

FLOOR & COVERING - "R.C.A."

Item#	Part	Description	XLII 45	XLII MTH40	XLII MTH45	XLII MTH45E	NOTES
NS	684685	ADHESIVE SIMSON #ISR 70-03 / 310ml CARTRIDGE	AR				F
15	CODE A	#702 R.C.A. LIGHT BLUE					
15	CODE B	#777 R.C.A. LIGHT CREAM					
15	CODE C	#653 R.C.A. LIGHT GREEN					
15	CODE D	#747 R.C.A. LIGHT BROWN					
15	CODE E	#766 R.C.A. DARK GREY					
15	CODE F	#604 R.C.A. BLACK					
15	CODE G	#758 R.C.A. CREAM					
15	CODE H	#630 R.C.A. BROWN					
15	CODE I	#895 R.C.A. RED					
15	CODE J	#602 R.C.A. ORANGE					
15	CODE K	#650 R.C.A. MAGENTA					
15	CODE L	#975 R.C.A. RED					
15	CODE Q	#788 R.C.A. LIGHT GREY					
15	CODE R	#411 R.C.A. LIGHT GREY					
		F) TO FIX COVERING ON FIBERGLASS					
		W) TO FIX COVERING ON WOOD					

		Date:07/2024	PAGE:Y2-1838-10
FLOOR COVERING - "TARAFLEX"			

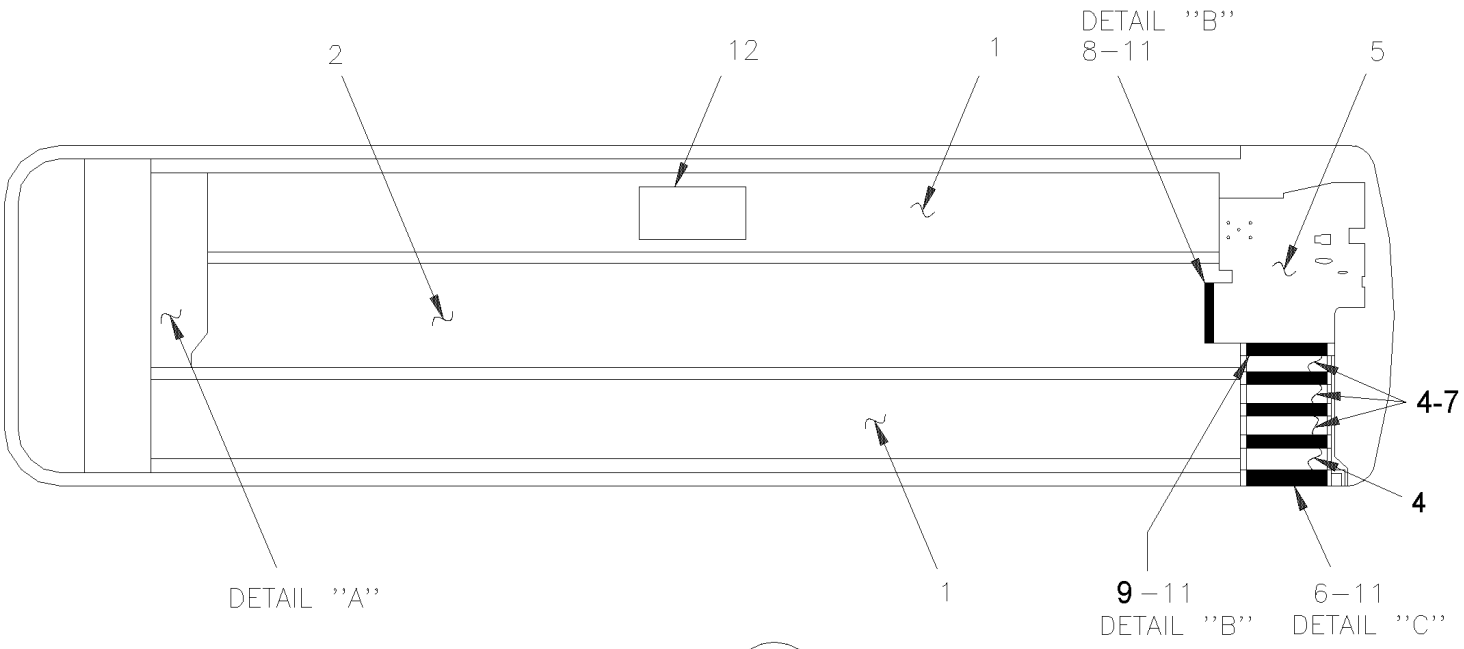

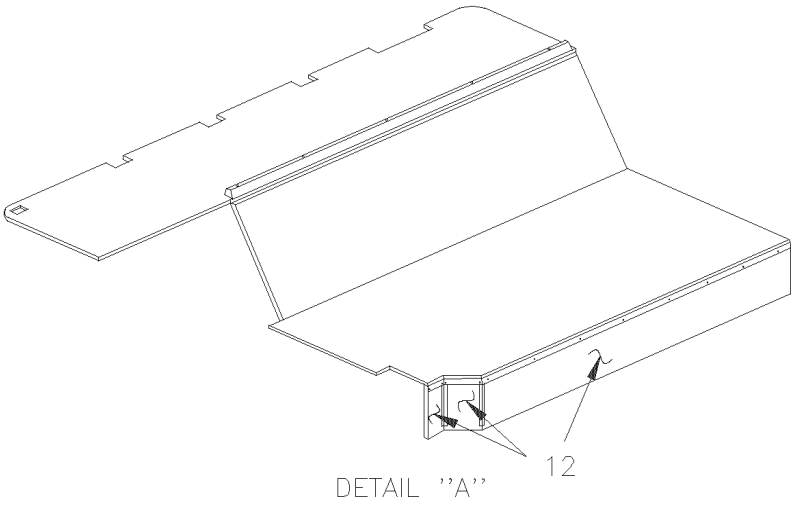

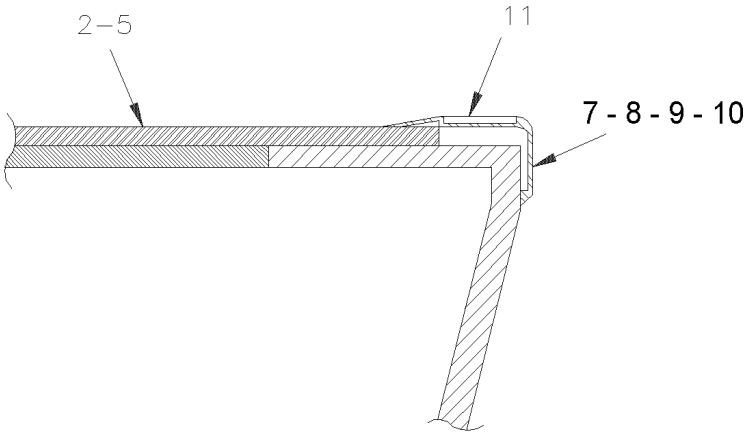

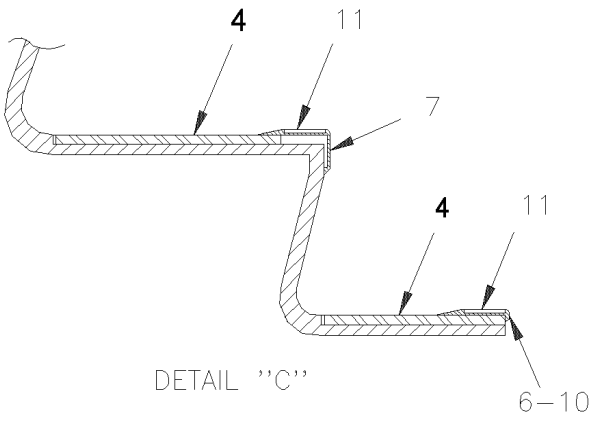

		Date:07/2024	PAGE:Y2-1838-10

FLOOR COVERING - "TARAFLEX"

Item#	Part	Description	XLII 45	XLII MTH40	XLII MTH45	XLII MTH45E	NOTES
		FLOOR COVERING SIDE SECTION / 664MM X 11582MM					
1	506800	COVERING DARK GREY #8780 PEGASUS	2				
1	506856	COVERING RED #6132 RUBIS	2				
1	506841	COVERING LIGHT GREY #8779 CYGNUS	2				
1	5061052	COVERING BROWN #8311 SWEDEN	2				
1	5061059	COVERING GREY #8731 POLAND	2				
1	5061066	COVERING GREEN #8525 CHINA	2				
1	5061073	COVERING BLUE #8414 EGYPT	2				
1	5061080	COVERING POUPRE #8720 RUSSIA	2				
1	5060021	COVERING BLUE #8423 AQUILIA	2				
1	328253	COVERING DARK GREY TARABUS #8750 TUCUNA	2				
1	5060007	COVERING LIGHT GREY #6768 GRIFFON	2				
1	5060039	COVERING DARK GREY #6782 URANUS	2				
1	5060049	COVERING DARK GREY #6782 SIRIUS	2				
1	820073	COVERING DARK GREY #8816 SYCAMORE	2				
1	5061087	COVERING GREY #8729 NORWAY	2				
1	820073	COVERING DARK GREY #8816 SYCAMORE	2				
1	820084	COVERING MED BLUE #9418 OLYMPE	2				
1	820089	COVERING DARK GREY #9727 ZEPHIR	2				
1	820096	COVERING DARK GREY URANUS #6727 ANTHRACITE	2				
		FLOOR COVERING AISLE SECTION / 924MMX11582MM					
2	506801	COVERING DARK GREY #8780 PEGASUS	1				
2	506857	COVERING RED #6132 RUBIS	1				
2	506840	COVERING LIGHT GREY #8779 CYGNUS	1				
2	506848	COVERING RED #6132 RUBIS	1				
2	5061053	COVERING BROWN #8311 SWEDEN	1				
2	5061060	COVERING GREY #8731 POLAND	1				
2	5061067	COVERING GREEN #8525 CHINA	1				
2	5061074	COVERING BLUE #8414 EGYPT	1				
2	5061081	COVERING POUPRE #8720 RUSSIA	1				
2	5060022	COVERING BLUE #8423 AQUILIA	1				
2	328254	COVERING DARK GREY TARABUS #8750 TUCUNA	1				
2	5060008	COVERING LIGHT GREY #6768 GRIFFON	1				
2	5060040	COVERING DARK GREY #6782 URANUS	1				
2	5060050	COVERING DARK GREY #6782 SIRIUS	1				
2	820074	COVERING DARK GREY #8816 SYCAMORE	1				
2	5061088	COVERING GREY #8729 NORWAY	1				
2	820074	COVERING DARK GREY #8816 SYCAMORE	1				

		Date:07/2024	PAGE:Y2-1838-10

FLOOR COVERING - "TARAFLEX"

Item#	Part	Description	XLII 45	XLII MTH40	XLII MTH45	XLII MTH45E	NOTES
2	820085	COVERING MED BLUE #9418 OLYMPE	1				
2	820090	COVERING DARK GREY #9727 ZEPHIR	1				
2	820097	COVERING DARK GREY URANUS #6727 ANTHRACITE	1				
		FLOOR COVERING STEP / 246MM X 654MM					
4	506939	COVERING DARK GREY #8780 PEGASUS	4				
4	506943	COVERING RED #6132 RUBIS	4				
4	506947	COVERING LIGHT GREY #8779 CYGNUS	4				
4	506940	COVERING DARK GREY #8780 PEGASUS / 246MM X 651MM	4				
4	506944	COVERING RED #6132 RUBIS / 246MM X 651MM	4				
4	506948	COVERING LIGHT GREY #8779 CYGNUS	4				
4	5061054	COVERING BROWN #8311 SWEDEN	1				
4	5061061	COVERING GREY #8731 POLAND	1				
4	5061068	COVERING GREEN #8525 CHINA	1				
4	5061075	COVERING BLUE #8414 EGYPT / 246MM X 651MM	1				
4	5061082	COVERING POUPRE #8720 RUSSIA	1				
4	5060023	COVERING BLUE #8423 AQUILIA	1				
4	328255	COVERING DARK GREY TARABUS #8750 TUCUNA / 246MM X 651MM	1				
4	5060009	COVERING LIGHT GREY #6768 GRIFFON	1				
4	5060041	COVERING DARK GREY #6782 URANUS	1				
4	5060051	COVERING DARK GREY #6782 SIRIUS	1				
4	820075	COVERING DARK GREY #8816 SYCAMORE	1				
4	5061089	COVERING GREY #8729 NORWAY	1				
4	820075	COVERING DARK GREY #8816 SYCAMORE	1				
4	820086	COVERING MED BLUE #9418 OLYMPE	1				
4	820091	COVERING DARK GREY #9727 ZEPHIR	1				
4	820098	COVERING DARK GREY URANUS #6727 ANTHRACITE	1				
		FLOOR COVERING UPPER STEPWELL / 1230MM X 1345MM					
5	506942	COVERING DARK GREY #8780 PEGASUS	1				
5	506946	COVERING RED #6132 RUBIS	1				
5	506950	COVERING LIGHT GREY #8779 CYGNUS	1				
5	5061055	COVERING BROWN #8311 SWEDEN	1				
5	5061062	COVERING GREY #8731 POLAND	1				
5	5061069	COVERING GREEN #8525 CHINA	1				
5	5061076	COVERING BLUE #8414 EGYPT	1				
5	5061083	COVERING POUPRE #8720 RUSSIA	1				
5	5060024	COVERING BLUE #8423 AQUILIA	1				
5	328256	COVERING DARK GREY TARABUS #8750 TUCUNA	1				
5	5060010	COVERING LIGHT GREY #6768 GRIFFON	1				

		Date:07/2024	PAGE:Y2-1838-10

FLOOR COVERING - "TARAFLEX"

Item#	Part	Description	XLII 45	XLII MTH40	XLII MTH45	XLII MTH45E	NOTES
5	5060042	COVERING DARK GREY #6782 URANUS	1				
5	5060052	COVERING DARK GREY #6782 SIRIUS	1				
5	5061090	COVERING GREY #8729 NORWAY	1				
5	820076	COVERING DARK GREY #8816 SYCAMORE	1				
5	820087	COVERING MED BLUE #9418 OLYMPE	1				
5	820092	COVERING DARK GREY #9727 ZEPHIR	1				
5	820099	COVERING DARK GREY URANUS #6727 ANTHRACITE	1				
6	506936	EXTRUSION "STEPBUS" 652MM	1				
7	506937	EXTRUSION "STEPBUS" 654MM	3				
8	506938	EXTRUSION "STEPBUS" 565MM	1				
9	5061023	EXTRUSION "STEPBUS" 700MM	1				
10	500435	SCREW TP FL PH #6x1 Z050	8				
11	506808	WHITE STRIP "STEPBUS" 34MM x 1490MM / BOX OF 20	1				
11	5061033	WHITE STRIP "STEPBUS" 34MM x 1490MM / BOX OF 20	1				
11	5061280	WHITE STRIP "STEPBUS" 34MM x 1490MM / EACH	1				
11	506088	WHITE STRIP "STEPBUS" 34MM x 565MM	1				
		FLOOR COVERING / 762MM X 1524MM					
12	506839	COVERING LIGHT GREY #8779 CYGNUS	1				
12	506794	COVERING DARK GREY #8780 PEGASUS	1				
12	506855	COVERING RED #6132 RUBIS	1				
12	5061056	COVERING BROWN #8311 SWEDEN	1				
12	5061063	COVERING GREY #8731 POLAND	1				
12	5061070	COVERING GREEN #8525 CHINA	1				
12	5061077	COVERING BLUE #8414 EGYPT	1				
12	5061084	COVERING POUPRE #8720 RUSSIA	1				
12	5006025	COVERING BLUE #8423 AQUILIA	1				
12	328257	COVERING DARK GREY TARABUS #8750 TUCUNA	1				
12	5060011	COVERING LIGHT GREY #6768 GRIFFON	1				
12	5060043	COVERING DARK GREY #6782 URANUS	1				
12	5060053	COVERING DARK GREY #6782 SIRIUS	1				
12	5061091	COVERING GREY #8729 NORWAY	1				
12	820077	COVERING DARK GREY #8816 SYCAMORE	1				
12	820088	COVERING MED BLUE #9418 OLYMPE	1				
12	820093	COVERING DARK GREY #9727 ZEPHIR	1				
12	820100	COVERING DARK GREY URANUS #6727 ANTHRACITE	1				
NS	680031	GLUE / 1LITER	1				W
NS	680028	GLUE / 15LITERS	1				W
NS	684654	GLUE CONTACT "SCOTCH-GRIP" / 3M #1357-NEUTRAL 18.9 LITERS	AR				F

		Date:07/2024	PAGE:Y2-1838-10

FLOOR COVERING - "TARAFLEX"

Item#	Part	Description	XLII 45	XLII MTH40	XLII MTH45	XLII MTH45E	NOTES
NS	684655	GLUE CONTACT "SCOTCH-GRIP" / 3M #1357-NEUTRAL 3.8 LITERS	AR				F
NS	684685	ADHESIVE SIMSON #ISR 70-03 / 310ml CARTRIDGE	AR				F
		F) TO FIX COVERING ON FIBERGLASS					
		W) TO FIX COVERING ON WOOD					

From Y-7046 To 8-9276		Date:07/2024	PAGE:Y2-1838-50
FLOOR - MTH			

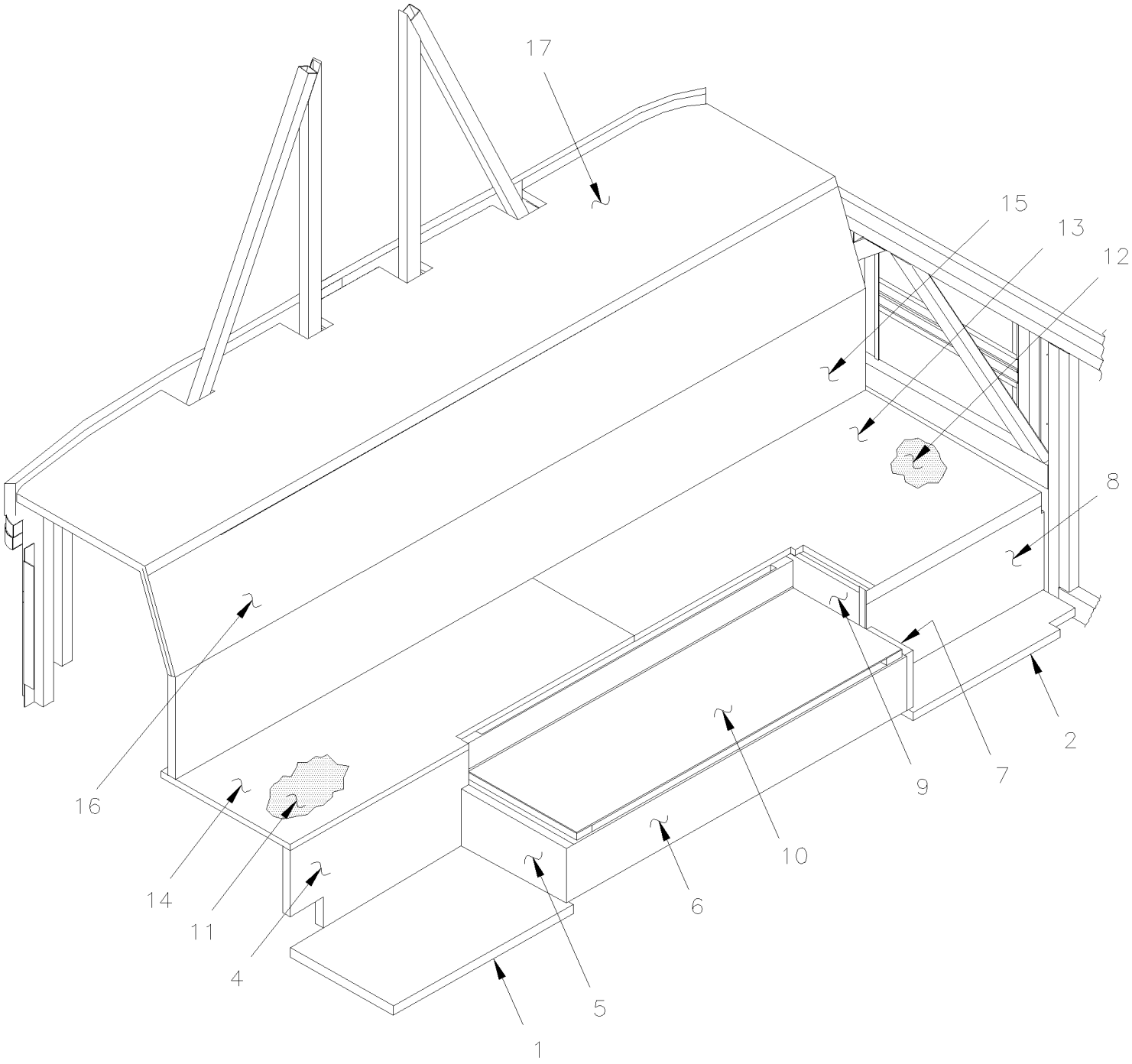

From Y-7046 To 8-9276		Date:07/2024	PAGE:Y2-1838-50
FLOOR - MTH			

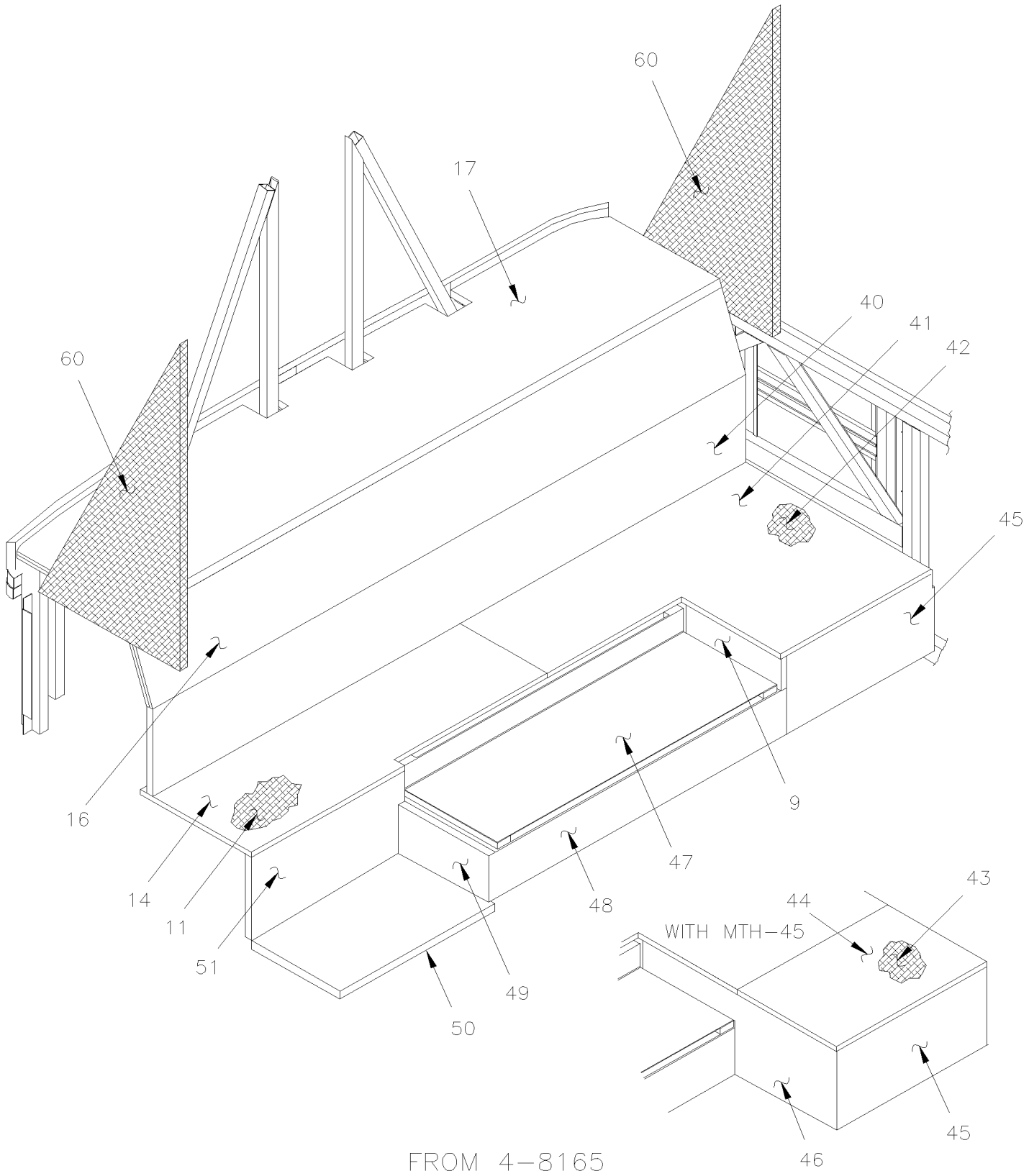

From Y-7046 To 8-9276		Date:07/2024	PAGE:Y2-1838-50
FLOOR - MTH			

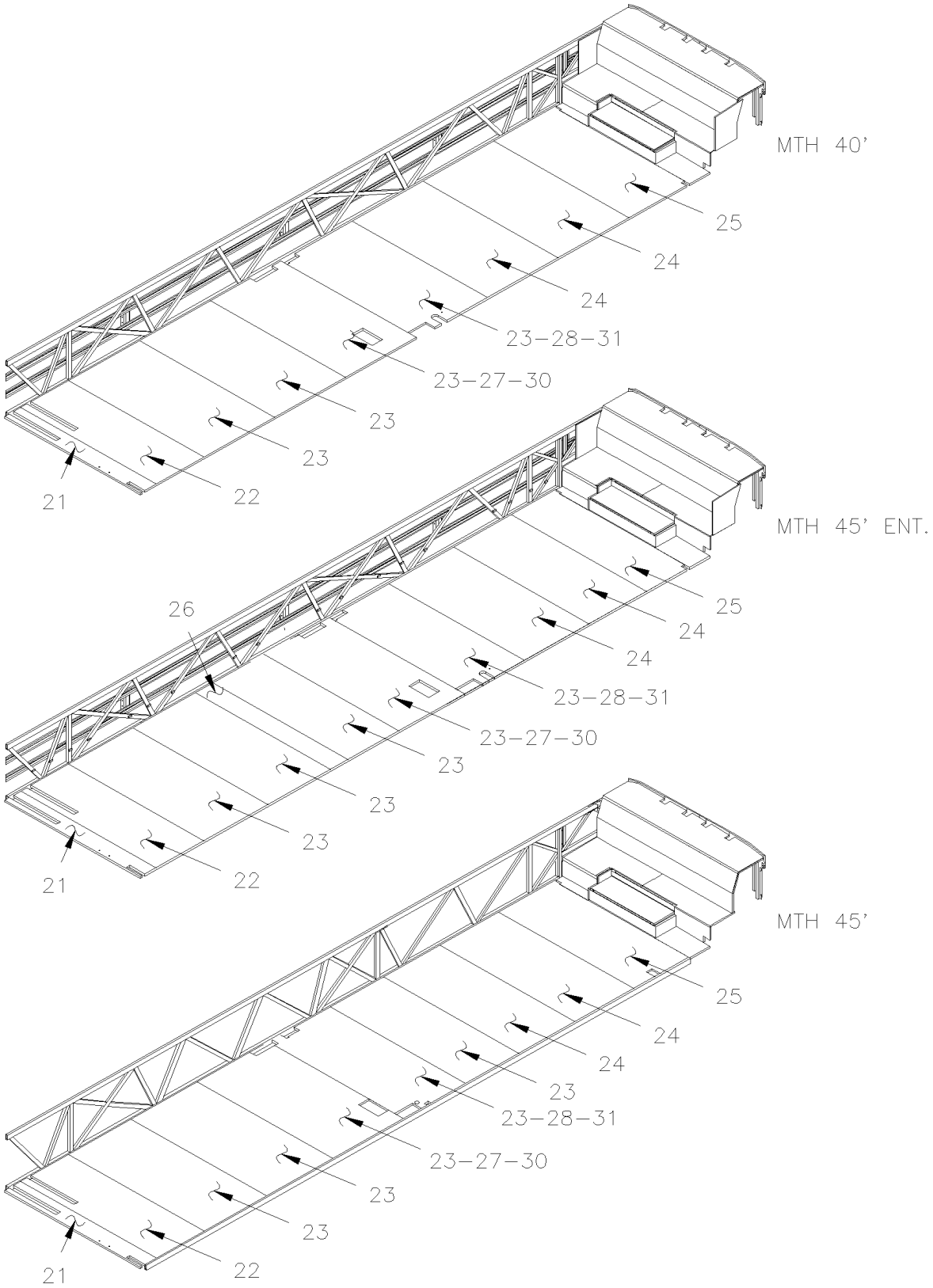

From Y-7046 To 8-9276		Date:07/2024	PAGE:Y2-1838-50
FLOOR - MTH			

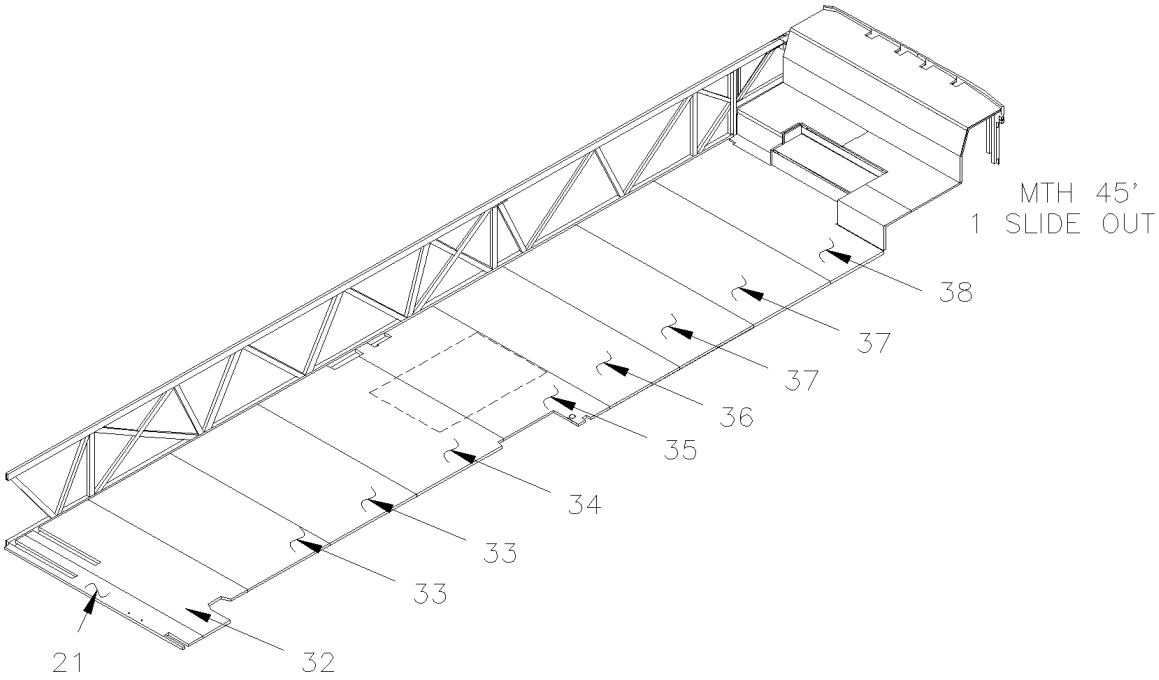

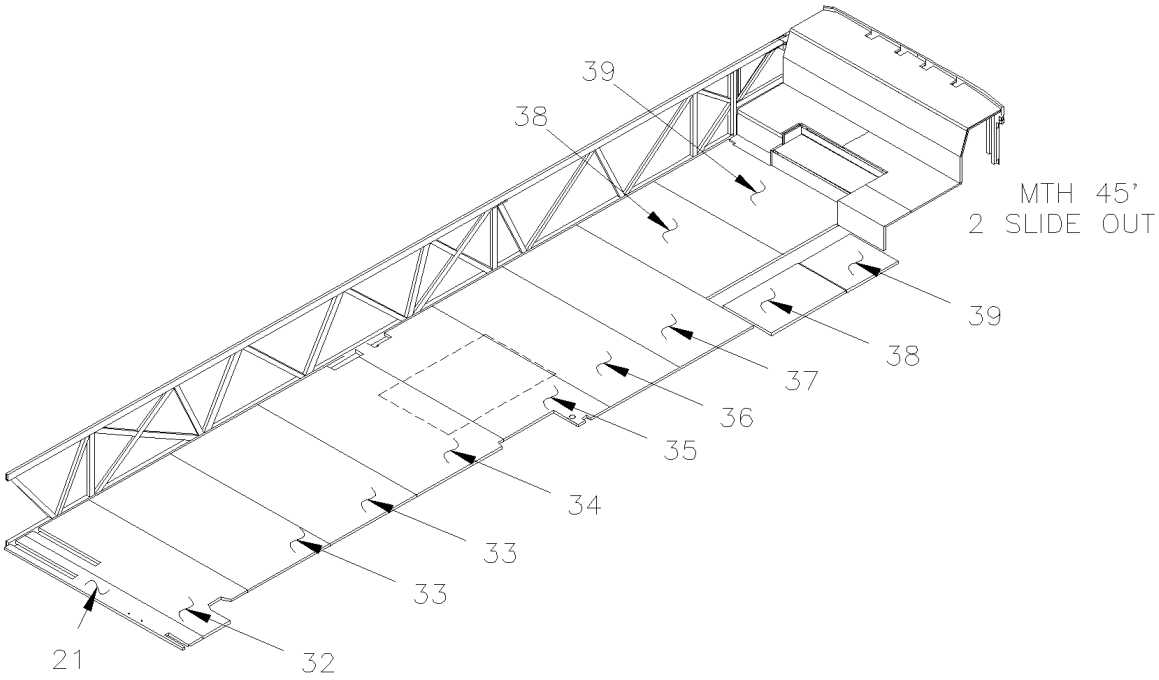

FROM 4-8165 UP TO 5-8805

From Y-7046 To 8-9276		Date:07/2024	PAGE:Y2-1838-50
FLOOR - MTH			

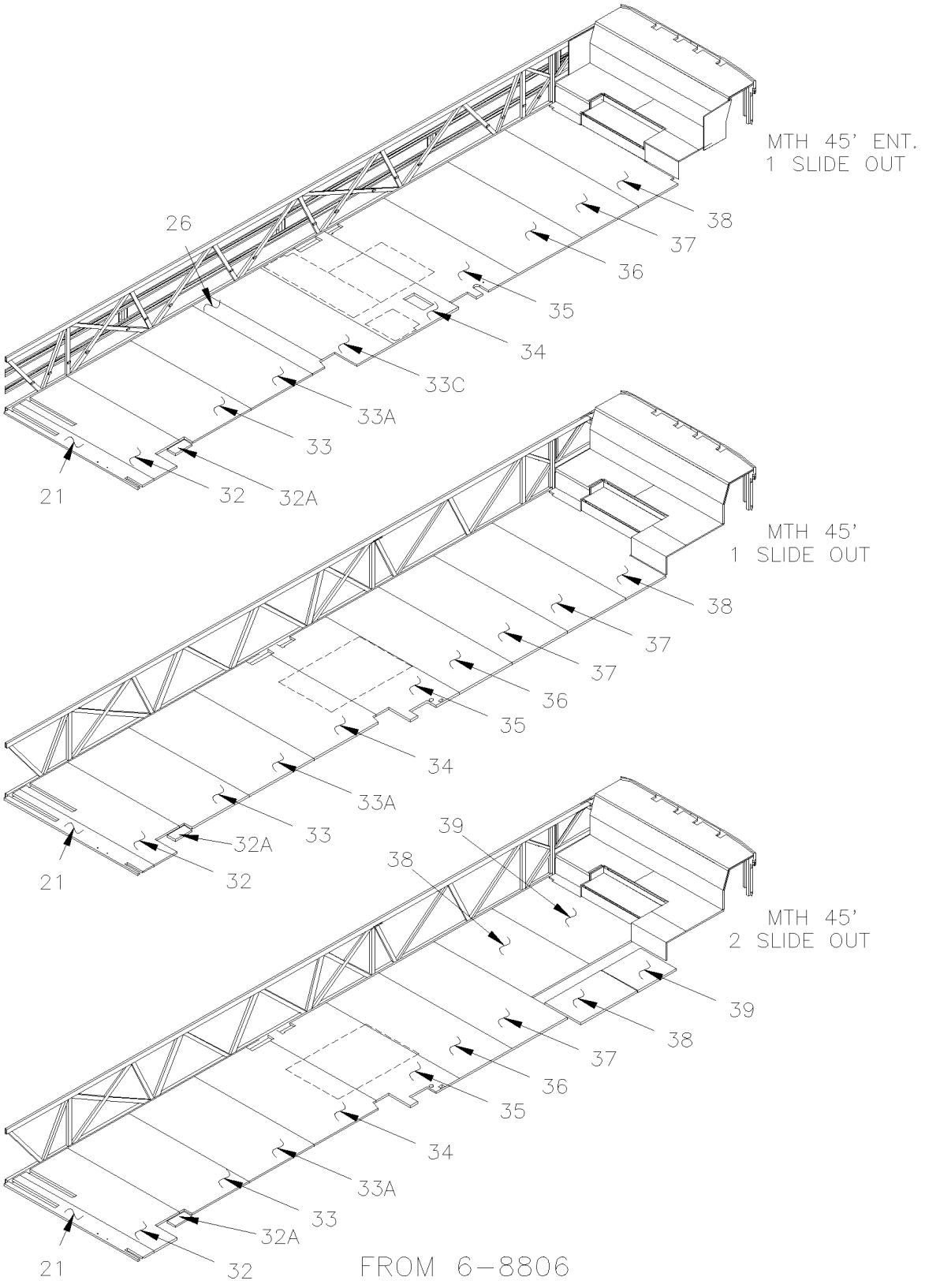

From Y-7046 To 8-9276		Date:07/2024	PAGE:Y2-1838-50

FLOOR - MTH

Item#	Part	Description	XLII 45	XLII MTH40	XLII MTH45	XLII MTH45E	NOTES
1	324420	FLOOR PANEL ASSY		1	1	1	
2	324472	FLOOR PANEL ASSY To 3-8164		1		1	
2	324419	FLOOR PANEL ASSY To 3-8164		1		1	A
2	323972	FLOOR PANEL ASSY			1		
4	327151	FLOOR PANEL ASSY		1		1	
4	325083	FLOOR PANEL ASSY		1		1	A
4	325082	FLOOR PANEL ASSY To 3-8164			1		
4	325081	FLOOR PANEL ASSY To 3-8164			1		A
4	325131	SUPPORT		1	1	1	
5	325074	FLOOR PANEL ASSY To 3-8164		1	1	1	
5	326207	FLOOR PANEL ASSY From 4-8165		1		1	
6	325076	FLOOR PANEL ASSY To 3-8164		1	1	1	
6	327826	FLOOR PANEL ASSY From 4-8165		1		1	
7	325075	FLOOR PANEL ASSY To 3-8164		1	1	1	
8	325078	FLOOR PANEL ASSY		1		1	
8	327827	FLOOR PANEL ASSY To 3-8164		1		1	
8	325077	FLOOR PANEL ASSY			1		
9	325080	FLOOR PANEL ASSY To 3-8164		1		1	
9	327830	FLOOR PANEL ASSY From 4-8165		1		1	
9	325079	FLOOR PANEL ASSY			1		
10	324678P	ACCESS ENGINE FLOOR PANEL To 3-8164		1		1	
. NS	324683	. WEATHERSTRIP RUBBER ASSY To 3-8164		1		1	
10	327829P	ACCESS ENGINE FLOOR PANEL From 4-8165		1		1	
. NS	327978	. WEATHERSTRIP RUBBER ASSY From 4-8165		1		1	
10	Call order desk	ACCESS ENGINE FLOOR PANEL To 3-8164			1		P
. NS	324296	. WEATHERSTRIP RUBBER ASSY To 3-8164			1		
NS	500186	SCREW CAP HEX 5/16-18x2 1/2 G5 Z050		6	6	6	
NS	500985	WASHER FL .343x.875x.125 Z050		6	6	6	
NS	471119	SEAL WASHER / RUB RAIL & PANEL		6	6	6	
NS	680532	SEALANT SIKA #221 / GREY / 310ml CARTRIDGE		1	1	1	
11	325049	INSULATING		1	1	1	
12	325050	INSULATING To 3-8164		1	1	1	
13	325048	FLOOR PANEL ASSY To 3-8164		1	1	1	
13	327479	FLOOR PANEL ASSY From 5-8165		1		1	C
14	325052	FLOOR PANEL ASSY To 3-8164		1	1	1	
14	326819	FLOOR PANEL ASSY From 4-8165		1		1	
14	327881	FLOOR PANEL ASSY From 4-8165			1		
15	324674	PANEL ASSY		1		1	
15	324241	PANEL ASSY To 3-8164			1		
16	324012	PANEL ASSY		1	1	1	
17	326844	PANEL ASSY		1		1	
17	326628	PANEL ASSY			1		

From Y-7046 To 8-9276		Date:07/2024	PAGE:Y2-1838-50

FLOOR - MTH

Item#	Part	Description	XLII 45	XLII MTH40	XLII MTH45	XLII MTH45E	NOTES
NS	680096	SEALANT BUTYL ALUM / GREY / 310ml CARTRIDGE		1	1	1	
17	500293	SCREW TP PAN PH #10x1 SS		1	1	1	
17	500618	SCREW TP FL PH #10x1 Z050		1	1	1	
17	500642	SCREW TP PAN PH #10x3/4 Z050		1	1	1	
17	5001232	NUT SLE #10-24x1/2 CHR		1	1	1	
17	5001236	SCREW MA FL PH #10-24x1 Z050		40	40	40	
17	5001143	SCREW DR WF TORX #12x2 CP		AR	AR	AR	
21	Call order desk	FLOOR PANEL ASSY		1		1	P
21	Call order desk	FLOOR PANEL ASSY			1		P
22	Call order desk	FLOOR PANEL ASSY		1		1	P
22	Call order desk	FLOOR PANEL ASSY			1		P
23	323968P	FLOOR PANEL ASSY		3			
23	323968P	FLOOR PANEL ASSY				4	
23	328877P	FLOOR PANEL ASSY			5		
24	323969P	FLOOR PANEL ASSY		2		2	
24	328877P	FLOOR PANEL ASSY			1		
25	325426P	FLOOR PANEL ASSY		1		1	A
25	Call order desk	FLOOR PANEL ASSY		1		1	P B
25	Call order desk	FLOOR PANEL ASSY To 4-8164			1		P B
25	Call order desk	FLOOR PANEL ASSY To 4-8164			1		P B
26	325442P	FLOOR PANEL ASSY To 6-8805				1	
26	Call order desk	FLOOR PANEL ASSY From 6-8806				1	P
27	Call order desk	FLOOR PANEL ASSY To 5-8726		1		1	P B
27	Call order desk	FLOOR PANEL ASSY From 5-8727				1	P B
27	Call order desk	FLOOR PANEL ASSY			1		P B
28	Call order desk	FLOOR PANEL ASSY To 4-8205		1		1	P B
28	Call order desk	FLOOR PANEL ASSY From 4-8206 To 5-8726		1		1	P B
28	Call order desk	FLOOR PANEL ASSY From 5-8727				1	P B
28	Call order desk	FLOOR PANEL ASSY			1		P B
30	327379	PANEL / FIRE WALL			1		
30	325729	PANEL / FIRE WALL		1		1	
31	325730	PANEL / FIRE WALL		1		1	
		NEXT FLOORS ARE USE WITH "SLIDE-OUT"					
32	Call order desk	FLOOR PANEL ASSY To 6-8805			1		P
32	Call order desk	FLOOR PANEL ASSY From 6-8806			1	1	P
32A	328214	FLOOR PANEL ASSY STREETSIDE (SMALL PIECE) From 6-8806			1	1	
33	Call order desk	FLOOR PANEL ASSY To 6-8805			2		P
33	Call order desk	FLOOR PANEL ASSY From 6-8806			1	1	P
33A	Call order desk	FLOOR PANEL ASSY BACKWARD From 6-8806				1	P
33C	Call order desk	FLOOR PANEL ASSY From 6-8806				1	P

From Y-7046 To 8-9276		Date:07/2024	PAGE:Y2-1838-50

FLOOR - MTH

Item#	Part	Description	XLII 45	XLII MTH40	XLII MTH45	XLII MTH45E	NOTES
34	Call order desk	FLOOR PANEL ASSY To 6-8805			1		P A
34	Call order desk	FLOOR PANEL ASSY From 6-8806			1		P
34	Call order desk	FLOOR PANEL ASSY To 6-8805			1		P B
34	Call order desk	FLOOR PANEL ASSY From 6-8806			1		P B
34	Call order desk	FLOOR PANEL ASSY From 6-8806				1	P A
34	Call order desk	FLOOR PANEL ASSY From 6-8806				1	P B
35	Call order desk	FLOOR PANEL ASSY To 3-8070			1		P A
35	Call order desk	FLOOR PANEL ASSY From 3-8071 To 6-8805			1		P A
35	Call order desk	FLOOR PANEL ASSY From 6-8806			1		P A
35	Call order desk	FLOOR PANEL ASSY To 3-8070			1		P B
35	Call order desk	FLOOR PANEL ASSY From 3-8071 To 6-8805			1		P B
35	Call order desk	FLOOR PANEL ASSY From 6-8806			1		P B
35	Call order desk	FLOOR PANEL ASSY From 6-8806				1	P A
35	Call order desk	FLOOR PANEL ASSY From 6-8806				1	P B
36	Call order desk	FLOOR PANEL ASSY To 6-8805			1		P B
36	Call order desk	FLOOR PANEL ASSY From 6-8806			1		P A
36	Call order desk	FLOOR PANEL ASSY To 6-8805			1		P A
36	Call order desk	FLOOR PANEL ASSY From 6-8806			1	1	P A
36	Call order desk	FLOOR PANEL ASSY From 6-8806			1	1	P B
36	Call order desk	FLOOR PANEL ASSY				1	P
37	Call order desk	FLOOR PANEL ASSY To 6-8805			1		P
37	Call order desk	FLOOR PANEL ASSY From 6-8806 To 8-9095			1		P
37	Call order desk	FLOOR PANEL ASSY From 8-9096			1		P
37	323969P	FLOOR PANEL ASSY				1	
NS	Call order desk	FLOOR PANEL TOP FORWARD CURBSIDE From 4-8165			1		P
NS	Call order desk	FLOOR PANEL TOP FORWARD STREETSIDE From 4-8165			1		P
NS	Call order desk	FLOOR PANEL TOP BACKWARD CURBSIDE From 4-8165			1		P
NS	Call order desk	FLOOR PANEL ASSY BACKWARD STREETSIDE From 4-8165			1		P
NS	Call order desk	FLOOR PANEL ASSY W/OUT REAR SLIDE OUT From 4-8165			1		P
38	325426P	FLOOR PANEL ASSY				1	
40	327991	PANEL ASSY From 4-8165			1		
41	327880	FLOOR PANEL ASSY From 5-8165 To 6-8805			1		C
41	328186	FLOOR PANEL ASSY From 6-8806			1		C
42	327878	INSULATING From 4-8165 To 6-8805			1		
42	328191	INSULATING From 6-8806			1		
43	327877	INSULATING From 4-8165 To 6-8805			1		
43	328196	INSULATING From 6-8806			1		
44	327879	FLOOR PANEL ASSY / FORWARD From 4-8165 To 6-8805			1		
44	328195	FLOOR PANEL ASSY / FORWARD From 6-8806			1		
44	327967	FLOOR PANEL ASSY / FORWARD From 6-8806			1		A
45	327865	FLOOR PANEL ASSY From 4-8165 To 5-8805			1		A

From Y-7046 To 8-9276		Date:07/2024	PAGE:Y2-1838-50

FLOOR - MTH

Item#	Part	Description	XLII 45	XLII MTH40	XLII MTH45	XLII MTH45E	NOTES
45	328292	FLOOR PANEL ASSY From 6-8806			1		A
45	327864	FLOOR PANEL ASSY From 4-8165 To 5-8805			1		
45	Call order desk	FLOOR PANEL ASSY From 6-8806			1		P
46	327840	FLOOR PANEL ASSY From 4-8165 To 6-8805			1		A
46	327973	FLOOR PANEL ASSY From 6-8806			1		
47	327887P	ACCESS ENGINE FLOOR PANEL From 4-8165			1		
. NS	327893	. WEATHERSTRIP RUBBER ASSY From 4-8165			1		
48	327838	FLOOR PANEL ASSY From 4-8165			1		
49	327861	FLOOR PANEL ASSY From 4-8165			1		
50	324240	FLOOR PANEL ASSY From 4-8165			1		
51	327862	FLOOR PANEL ASSY From 4-8165			1		
51	327863	FLOOR PANEL ASSY From 4-8165			1		A
60	**Y2-1839-70**	**INSULATING REAR END INSIDE OVER ENGINE**					
		A) W/SMALL A/C					
		B) W/LARGE A/C					
		C) THIS PANEL FINISH IN LINE WITH # 6 PANEL					
		P) CALL ORDER DESK FOR SPECIFIC APPLICATION (V.I.N.)					

From 8-9279 To 8-9339		Date:07/2024	PAGE:Y2-1838-51
FLOOR - MTH			

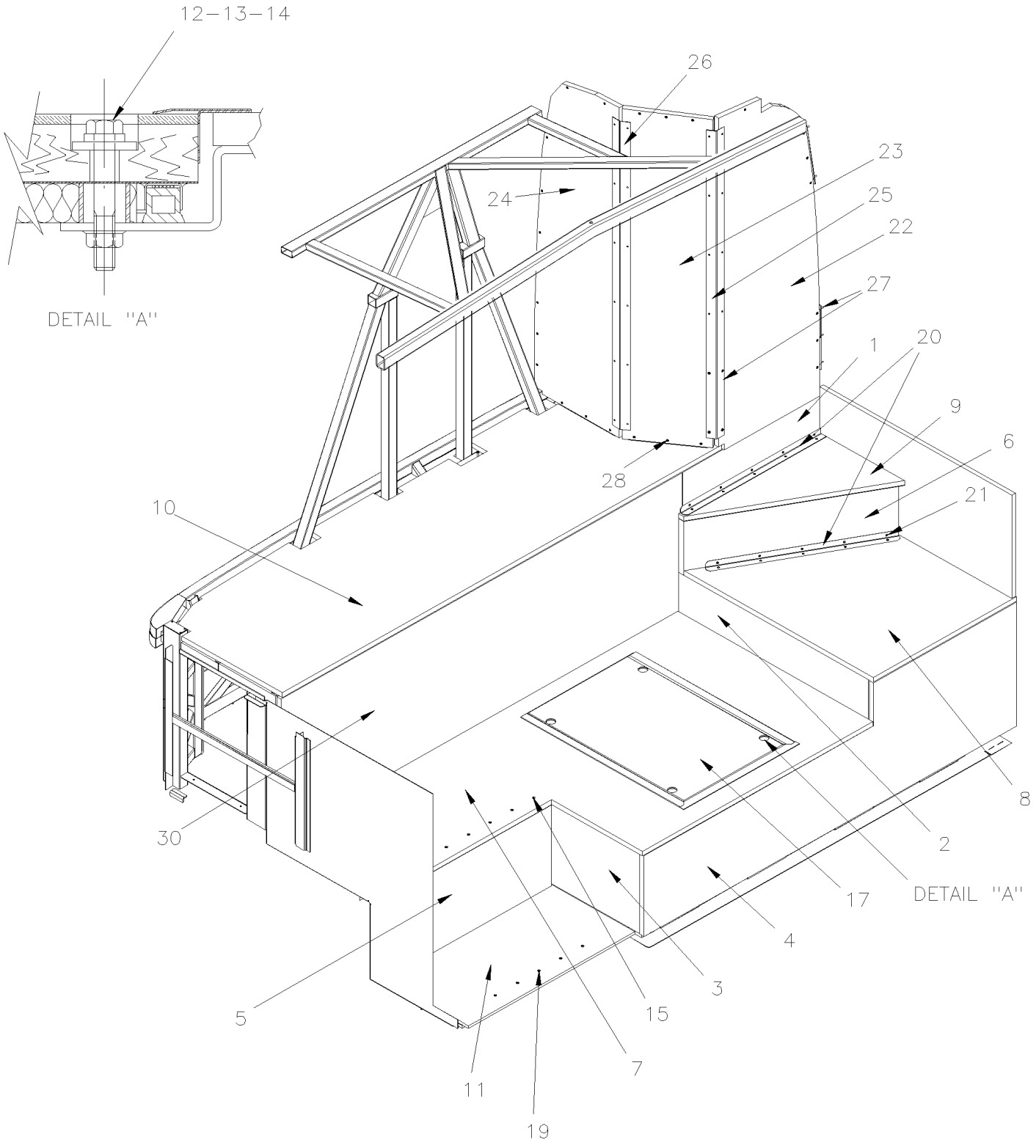

MTH-40' & MTH-45' ENT

From 8-9279 To 8-9339		Date:07/2024	PAGE:Y2-1838-51
FLOOR - MTH			

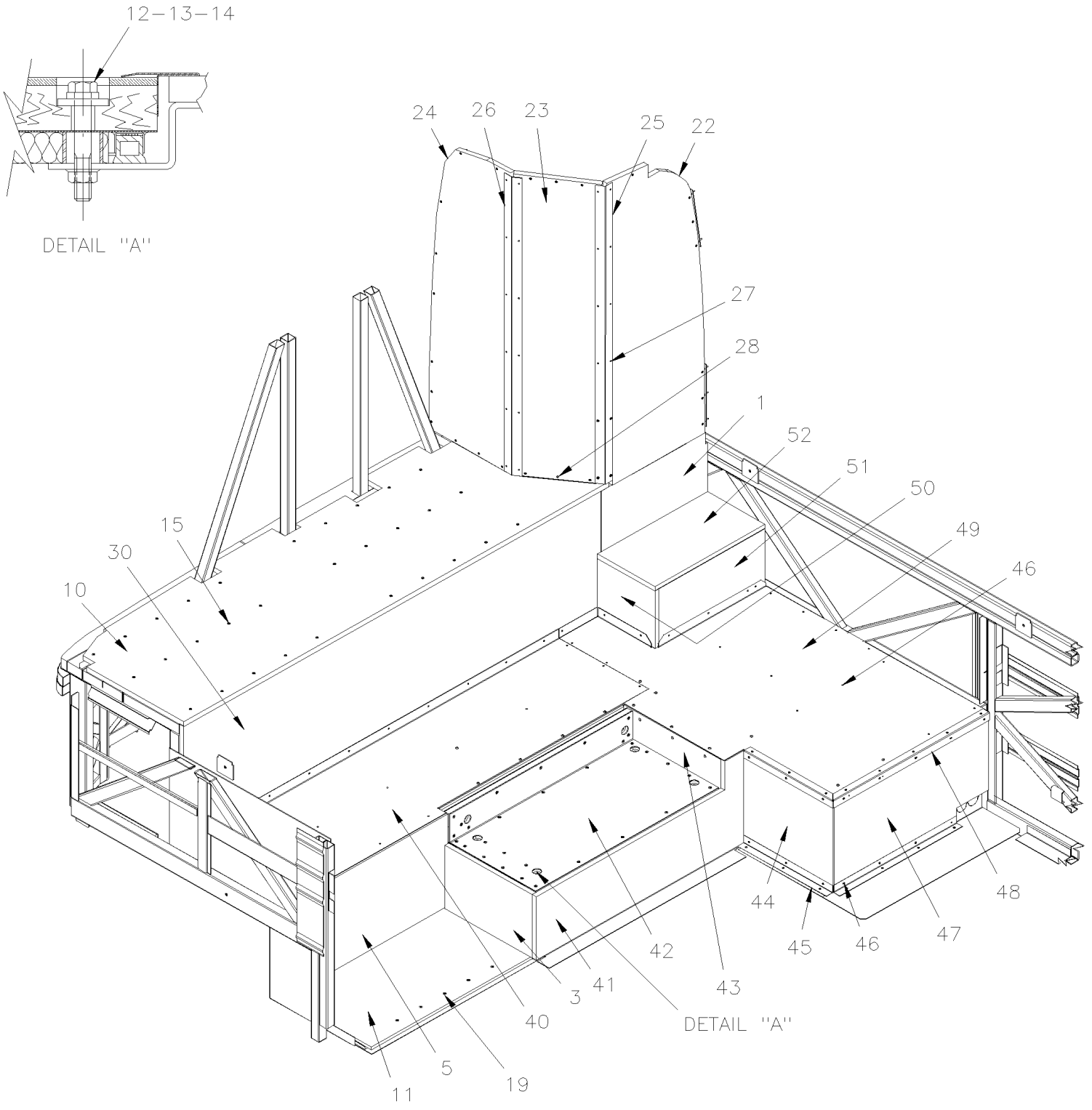

MTH−45'

From 8-9279 To 8-9339		Date:07/2024	PAGE:Y2-1838-51

FLOOR - MTH

Item#	Part	Description	XLII 45	XLII MTH40	XLII MTH45	XLII MTH45E	NOTES
1	328684	FLOOR PANEL ASSY				1	
1	328695	FLOOR PANEL ASSY			1		
2	328669	FLOOR PANEL ASSY				1	
3	328664	FLOOR PANEL ASSY				1	
3	328695	FLOOR PANEL ASSY			1		
4	328665	FLOOR PANEL ASSY				1	
5	328663	FLOOR PANEL / W/LARGE A/C				1	B
5	328676	FLOOR PANEL / W/SMALL A/C				1	A
5	328696	FLOOR PANEL / W/LARGE A/C			1		B
5	328685	FLOOR PANEL / W/SMALL A/C			1		A
6	328666	FLOOR PANEL ASSY				1	
7	328667	FLOOR PANEL ASSY				1	
8	328671	FLOOR PANEL ASSY				1	
9	328670	FLOOR PANEL ASSY				1	
10	328672	FLOOR PANEL ASSY			1		
11	328673	FLOOR PANEL ASSY				1	
11	328733	FLOOR PANEL ASSY			1		
12	500186	SCREW CAP HEX 5/16-18x2 1/2 G5 Z050			4	4	
13	500985	WASHER FL .343x.875x.125 Z050			4	4	
14	471119	SEAL WASHER / RUB RAIL & PANEL			4	4	
15	500620	SCREW TP FL PH #10x1 1/2 Z050			AR	AR	
16	680096	SEALANT BUTYL ALUM / GREY / 310ml CARTRIDGE			AR	AR	
17	328772P	PANEL ASSY / ENGINE ACCESS				1	
. NS	320037	. WEATHERSTRIP RUBBER ASSY				1	
18	684517	ADHESIVE SIMSON #ISR 70-03 / GREY / 310ml CARTRIDGE			AR	AR	
19	5001349	SCREW WO TR PH #8x7/8			6	6	
20	328450	ANGLE				2	
21	500373	SCREW TP BDG PH #6x1/2 N500			20	20	
22	Call order desk	PANEL VENEER				1	P
23	Call order desk	PANEL VENEER			1		P
23	Call order desk	PANEL VENEER				1	P
24	Call order desk	PANEL VENEER			1		P
24	Call order desk	PANEL VENEER				1	P
25	320398	SUPPORT VENEER			1		
25	320399	SUPPORT VENEER				1	
26	320398	SUPPORT VENEER			1	1	
26	320399	SUPPORT VENEER			1		
27	500641	SCREW TP PAN PH #8x3/4 Z050			AR	AR	
28	500645	SCREW TP OV PH #8x1 1/4 Z050			AR	AR	
29	405809	ANGLE LOWER 260MM			5	5	
30	328668	FLOOR PANEL ASSY			1	1	

From 8-9279 To 8-9339		Date:07/2024	PAGE:Y2-1838-51

FLOOR - MTH

Item#	Part	Description	XLII 45	XLII MTH40	XLII MTH45	XLII MTH45E	NOTES
40	328689	ALL PANEL			1		
41	328687	FLOOR PANEL ASSY			1		
42	Call order desk	PANEL ASSY / ENGINE ACCESS			1		P
43	328630	FLOOR PANEL ASSY			1		
44	328708	FLOOR PANEL ASSY			1		
45	328731	ANGLE LOWER FLOOR			1		A
45	328732	ANGLE LOWER FLOOR			1		B
46	500613	SCREW TP PAN PH #10x1/2 Z050			32		
47	328706	F W/O SO SAC			1		A
47	328712	F W/O SO LAC			1		B
48	328730	ANGLE UPPER FLOOR			1		
49	328697	ALL PANEL			1		
50	328690	FLOOR PANEL ASSY			1		
51	328691	FLOOR PANEL ASSY			1		
52	328692	FLOOR PANEL ASSY			1		
		A) WITH SMALL A/C SYSTEM					
		B) WITH LARGE A/C SYSTEM					
		P) CALL ORDER DESK FOR SPECIFIC APPLICATION (V.I.N.)					

From Y-7046 To 2-7702		Date:07/2024	PAGE:Y2-1839-00
INSULATING SIDE WALL - LOWER PANEL - BUS			

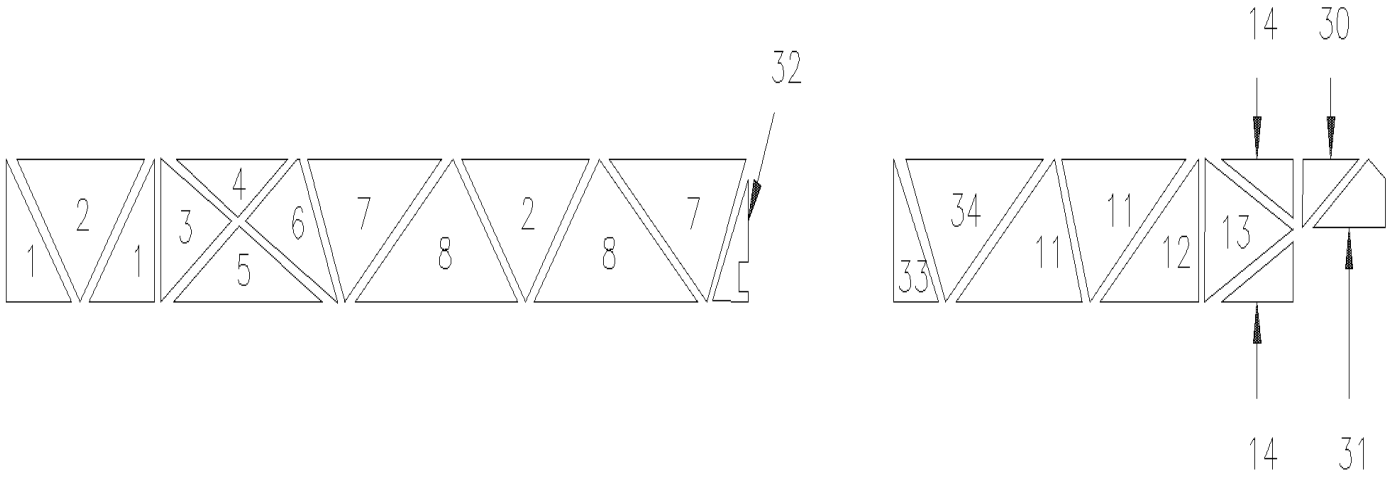

BUS 45' WITH RICON

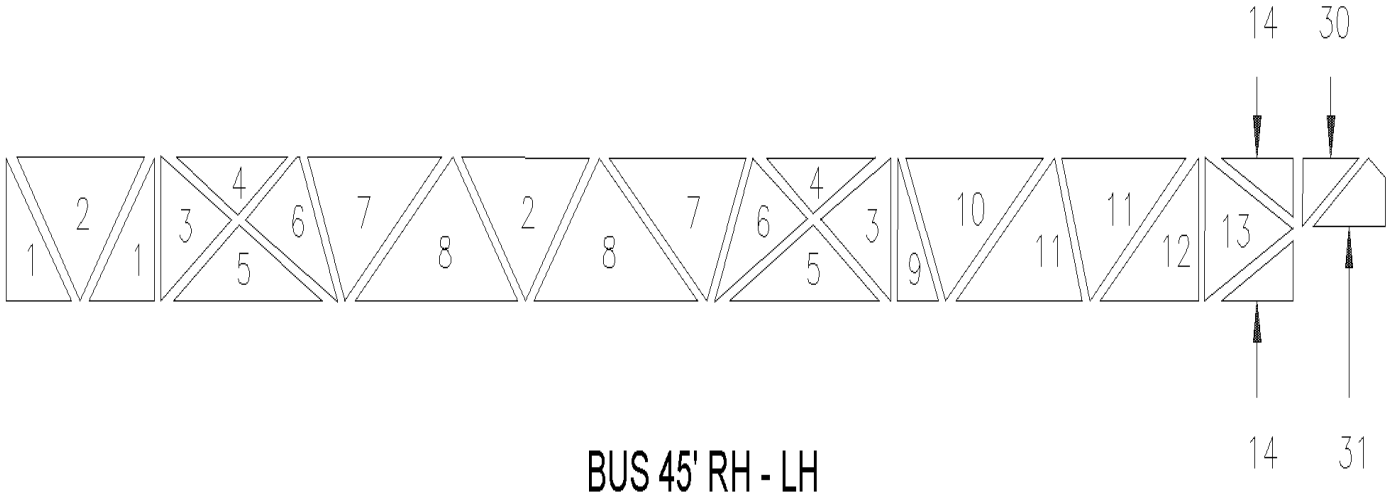

BUS 45' RH - LH

From Y-7046 To 2-7702		Date:07/2024	PAGE:Y2-1839-00

INSULATING SIDE WALL - LOWER PANEL - BUS

Item#	Part	Description	XLII 45	XLII MTH40	XLII MTH45	XLII MTH45E	NOTES
1	350893	SIDE INSULATION PANEL	4				
2	350894	SIDE INSULATION PANEL	2				
3	350895	SIDE INSULATION PANEL	4				
4	350896	SIDE INSULATION PANEL	4				
5	350897	SIDE INSULATION PANEL	4				
6	350898	SIDE INSULATION PANEL	4				
7	350899	SIDE INSULATION PANEL	2				
8	350900	SIDE INSULATION PANEL	4				
9	350901	SIDE INSULATION PANEL	2				
10	350902	SIDE INSULATION PANEL	2				
11	350903	SIDE INSULATION PANEL	4				
12	350904	SIDE INSULATION PANEL	2				
13	350905	SIDE INSULATION PANEL	2				
14	350906	SIDE INSULATION PANEL	4				
30	350949	SIDE INSULATION PANEL	1				
31	350950	SIDE INSULATION PANEL	1				
32	350977	SIDE INSULATION PANEL	1				
33	350979	SIDE INSULATION PANEL	1				
34	350978	SIDE INSULATION PANEL	1				
NS	350922	KIT INSULATING PANEL L.H. & R.H. WALL	2				
NS	350975	KIT INSULATING PANEL R.H. WALL / W/W.C.L.	1				
NS	850073	ALUMINUM WALL COVERING ADHESIVE / 28 1/2" X 448"	2				
NS	684196	PRIMER ELASTOCOL # 593	AR				
NS	320104	INSULATING PLATE / ALUMINUM 18GA / "E" SHAPE 90MM X 102MM	AR				

From 2-7703 To 6-8906		Date:07/2024	PAGE:Y2-1839-01
INSULATING SIDE WALL - LOWER PANEL - BUS			

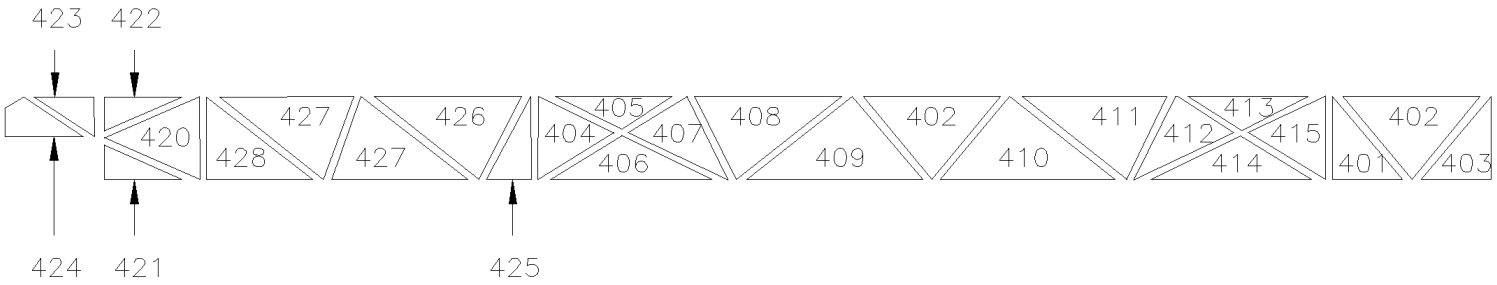

BUS – 45' LH

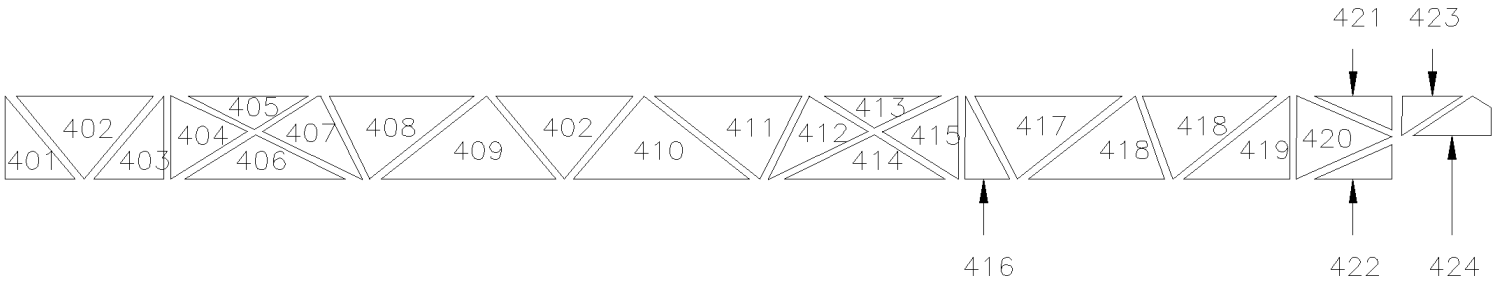

BUS – 45' RH

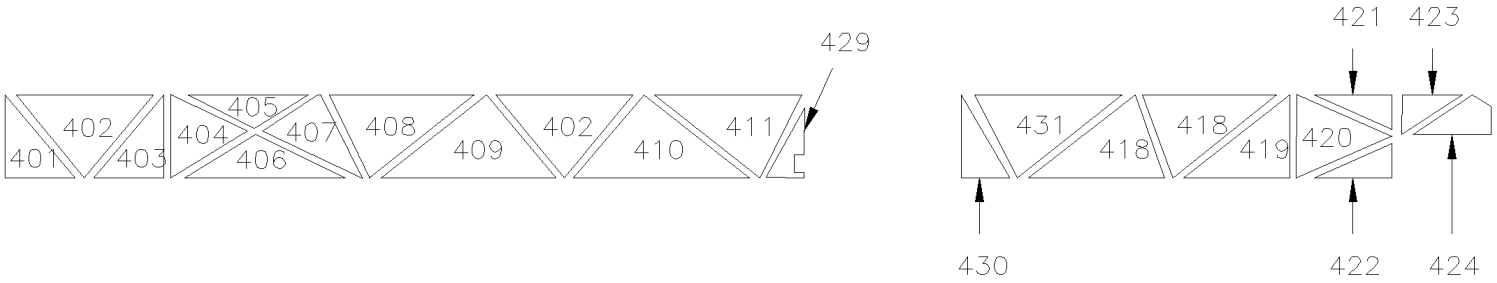

BUS – 45' RH W / W.C.L.

From 2-7703 To 6-8906		Date:07/2024	PAGE:Y2-1839-01

INSULATING SIDE WALL - LOWER PANEL - BUS

Item#	Part	Description	XLII 45	XLII MTH40	XLII MTH45	XLII MTH45E	NOTES
	351130	KIT INSULATING PANEL L.H. WALL To 3-8164	1				
	351500	KIT INSULATING PANEL L.H. WALL From 4-8165	1				
	351131	KIT INSULATING PANEL R.H. WALL To 3-8164	1				
	351499	KIT INSULATING PANEL R.H. WALL From 4-8165	1				
	351135	KIT INSULATING PANEL R.H. WALL / W/W.C.L. To 3-8464	1				
	351501	KIT INSULATING PANEL R.H. WALL / W/W.C.L. From 4-8165	1				
30	350949	SIDE INSULATION PANEL	2				
31	350950	SIDE INSULATION PANEL	2				
401	351107	SIDE INSULATION PANEL	2				
402	351108	SIDE INSULATION PANEL	2				
403	351109	SIDE INSULATION PANEL	2				
404	351110	SIDE INSULATION PANEL	2				
405	351111	SIDE INSULATION PANEL	2				
406	351112	SIDE INSULATION PANEL	2				
407	351113	SIDE INSULATION PANEL	2				
408	351114	SIDE INSULATION PANEL	2				
409	351115	SIDE INSULATION PANEL	2				
410	351116	SIDE INSULATION PANEL	2				
411	351117	SIDE INSULATION PANEL	2				
412	351118	SIDE INSULATION PANEL	2				
413	351119	SIDE INSULATION PANEL	2				
414	351120	SIDE INSULATION PANEL	2				
415	351121	SIDE INSULATION PANEL	2				
416	351122	SIDE INSULATION PANEL	2				
417	351123	SIDE INSULATION PANEL	2				
418	351124	SIDE INSULATION PANEL	2				
419	351125	SIDE INSULATION PANEL	2				
420	351126	SIDE INSULATION PANEL	2				
421	351127	SIDE INSULATION PANEL	2				
422	351128	SIDE INSULATION PANEL	2				
423	350949	SIDE INSULATION PANEL	1				
424	350950	SIDE INSULATION PANEL	1				
425	351129	SIDE INSULATION PANEL	2				
426	351132	SIDE INSULATION PANEL	2				
427	351133	SIDE INSULATION PANEL	2				
428	351134	SIDE INSULATION PANEL	2				
429	351136	SIDE INSULATION PANEL	2				
430	351137	SIDE INSULATION PANEL	2				
431	351138	SIDE INSULATION PANEL	2				
NS	850073	ALUMINUM WALL COVERING ADHESIVE / 28 1/2" X 448"	2				
NS	684196	PRIMER ELASTOCOL # 593	AR				
NS	320104	INSULATING PLATE / ALUMINUM 18GA / "E" SHAPE 90MM X 102MM	AR				

From Y-7046 To 6-8906		Date:07/2024	PAGE:Y2-1839-05
INSULATING FRONT - BUS			

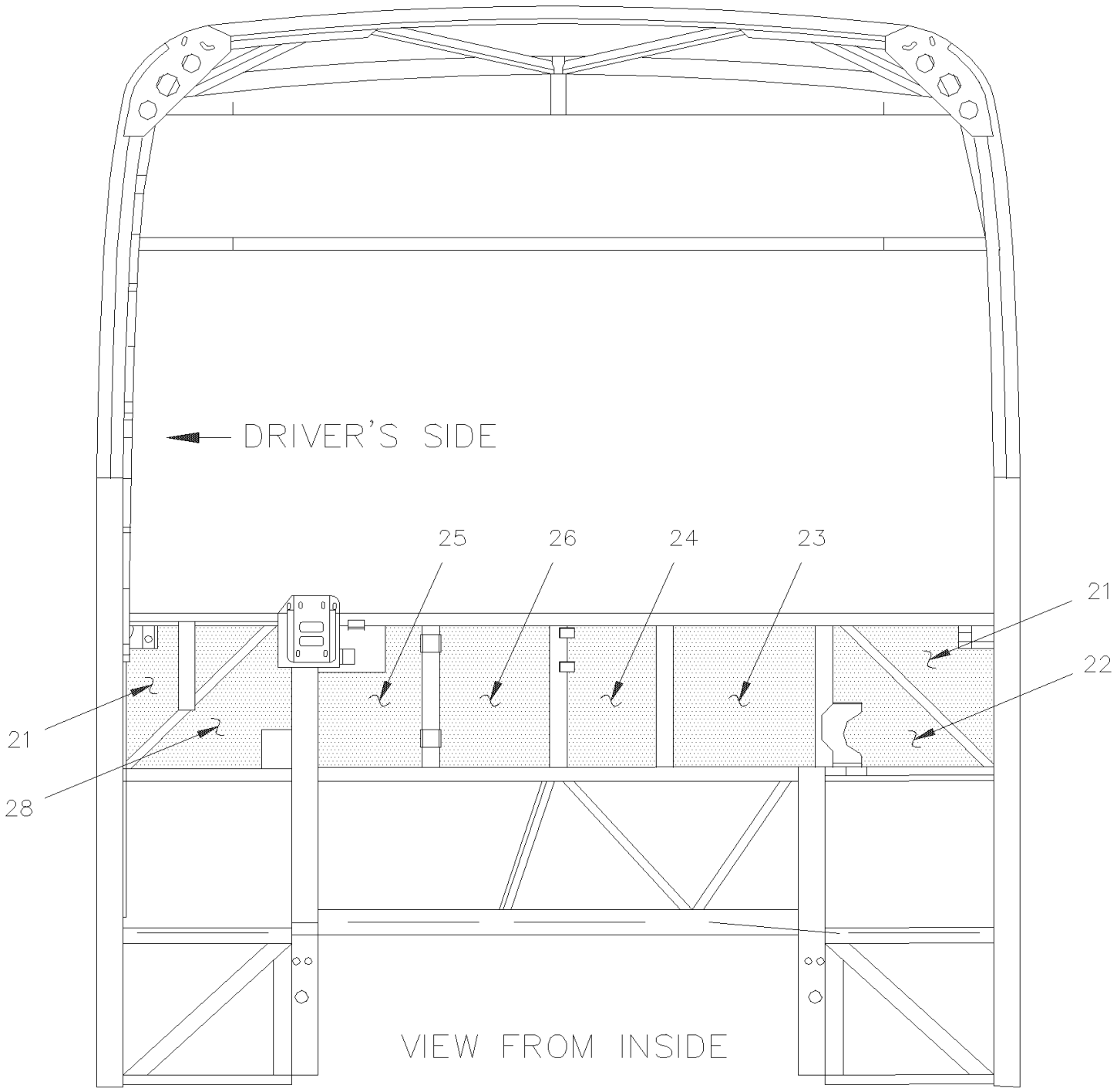

BUS 45'

From Y-7046 To 6-8906		Date:07/2024	PAGE:Y2-1839-05

INSULATING FRONT - BUS

Item#	Part	Description	XLII 45	XLII MTH40	XLII MTH45	XLII MTH45E	NOTES
21	350929	INSULATING PANEL	2				
22	350930	INSULATING PANEL	1				
23	350931	INSULATING PANEL	1				
24	350932	INSULATING PANEL	1				
25	350933	INSULATING PANEL	1				
26	350934	INSULATING PANEL	1				
27	350935	INSULATING PANEL	1				
28	350936	INSULATING PANEL	1				
NS	680397	CONTACT GLUE / AEROSOL 17oz	AR				
28	850032	INSULATION PAD NOISE 1" x 48" x 35' / ARMAFLEX POLYURETHANE FOAM	AR				

From Y-7046 To 8-9339		Date:07/2024	PAGE:Y2-1839-10
INSULATING FLOOR REAR AXLE			

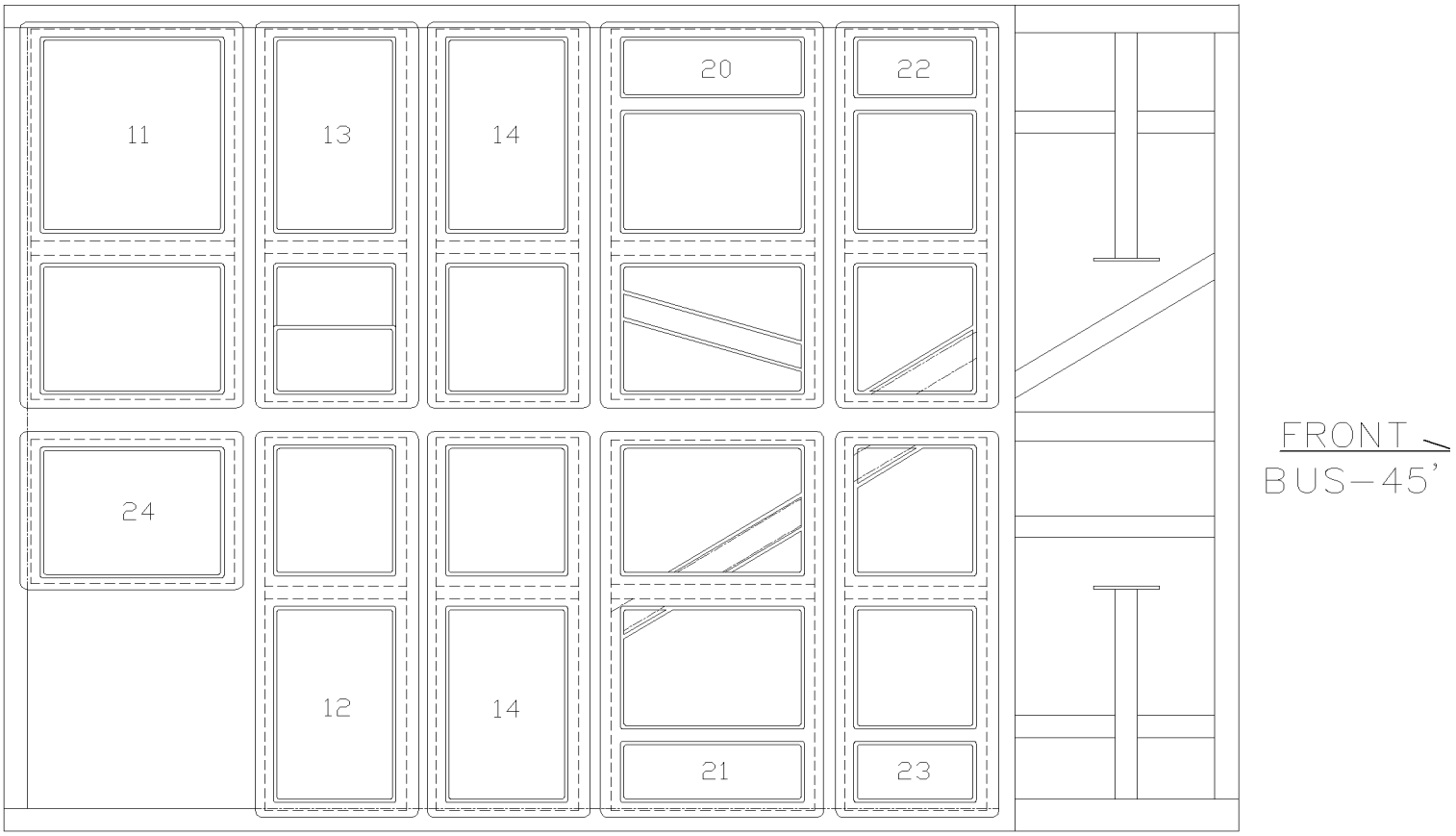

From Y-7046 To 8-9339		Date:07/2024	PAGE:Y2-1839-10
INSULATING FLOOR REAR AXLE			

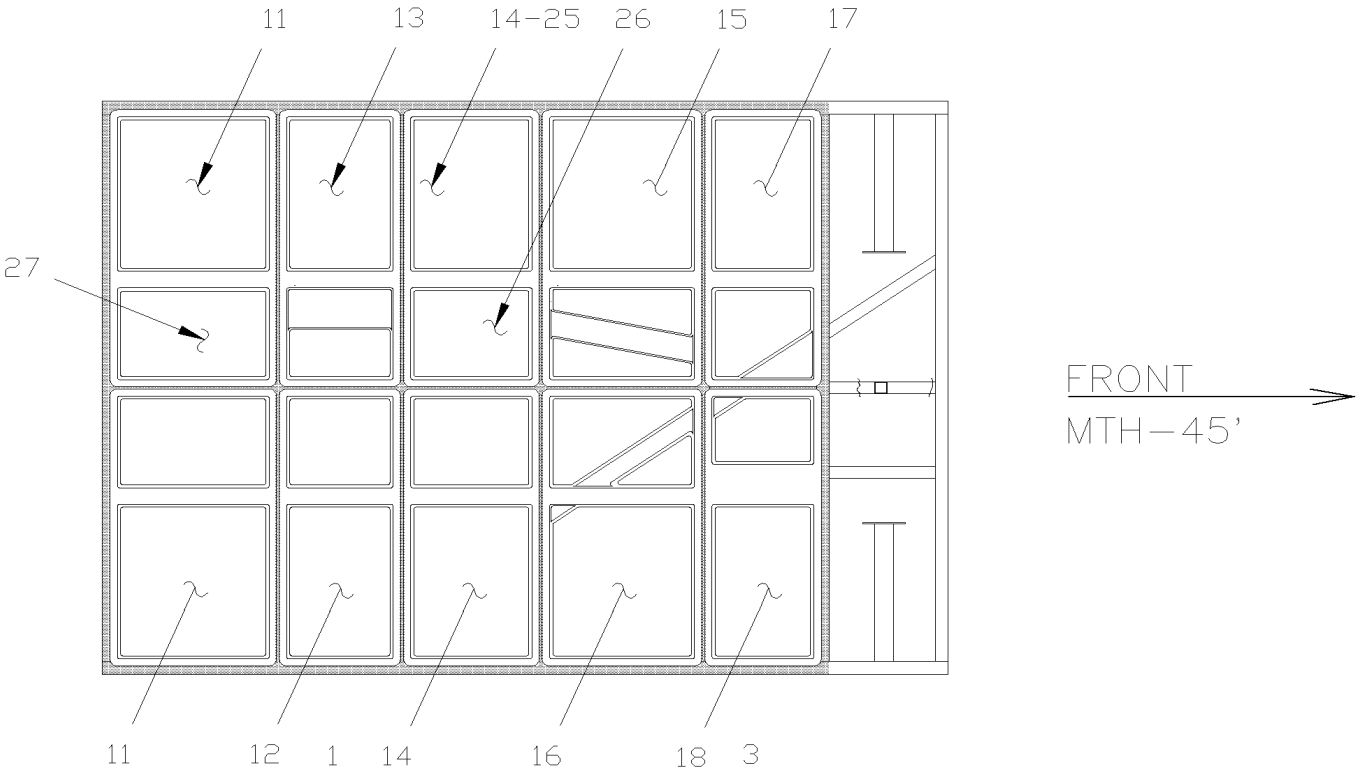

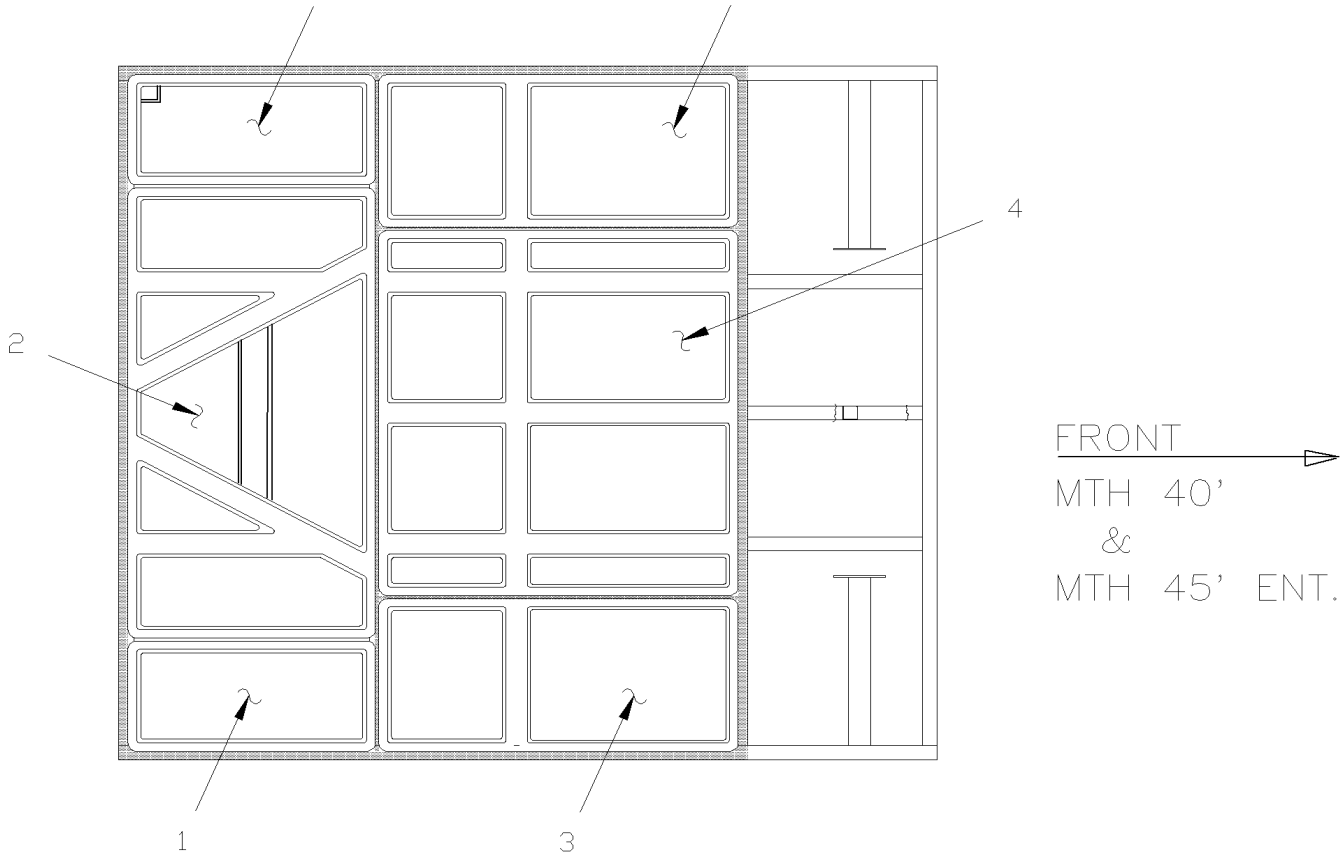

From Y-7046 To 8-9339		Date:07/2024	PAGE:Y2-1839-10

INSULATING FLOOR REAR AXLE

Item#	Part	Description	XLII 45	XLII MTH40	XLII MTH45	XLII MTH45E	NOTES
1	324561	INSULATING HOLDER To 7-9095		2		2	
1	328644	INSULATING HOLDER # 1 STREETSIDE From 7-9096		1		1	
1	328680	INSULATING HOLDER # 1 STREETSIDE From 7-9096		1		1	
2	324562	INSULATING HOLDER # 2 To 7-9095		1		1	
2	329490	INSULATING HOLDER # 2 From 7-9096		1		1	
3	324563	INSULATING HOLDER		2		2	
4	324564	INSULATING HOLDER		1		1	
11	325099	INSULATING HOLDER	2		2		
12	325100	INSULATING HOLDER	1		1		
13	325101	INSULATING HOLDER	1		1		
14	325102	INSULATING HOLDER	2		2		
15	325103	INSULATING HOLDER	1		1		
16	325104	INSULATING HOLDER	1		1		
17	325105	INSULATING HOLDER	1		1		
18	325106	INSULATING HOLDER	1		1		
NS	325098	INSULATING KIT	1		1		
NS	324320	INSULATING KIT To 7-9095		1		1	
18	328683	INSULATING KIT From 7-9096		1		1	
NS	327443	INSULATING KIT / W/W.C.L. To 6-8906	1				
20	327415	INSULATING HOLDER To 6-8906	1				
21	327416	INSULATING HOLDER To 6-8906	1				
22	327417	INSULATING HOLDER To 6-8906	1				
23	327418	INSULATING HOLDER To 6-8906	1				
24	325178	INSULATING HOLDER To 6-8906	1				
25	351367	INSULATING HOLDER	1		1		
26	351368	INSULATING HOLDER	1		1		
27	351366	INSULATING HOLDER	1		1		
NS	329069	INSULATING PAD 48" X 48" / CUT TO FIT	AR	AR	AR	AR	

From Y-7046 To 8-9339		Date:07/2024	PAGE:Y2-1839-15

INSULATING FRONT - SUBFRAME

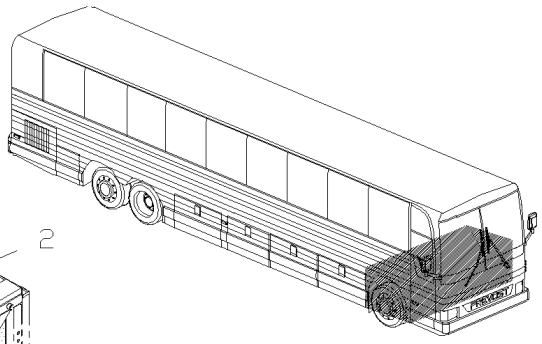

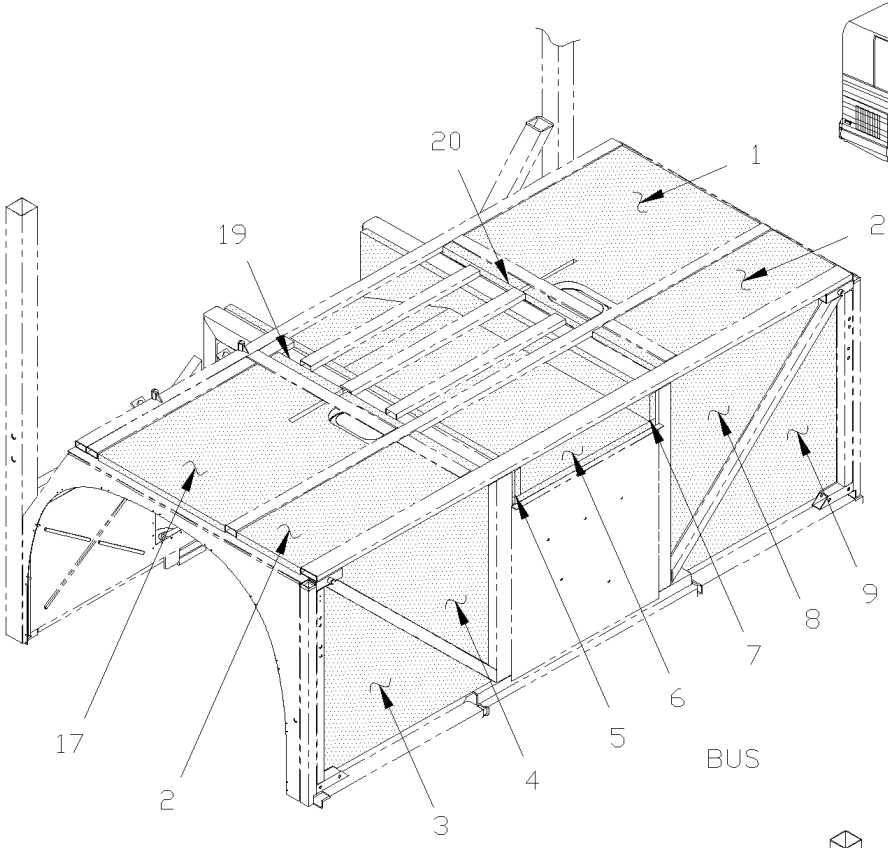

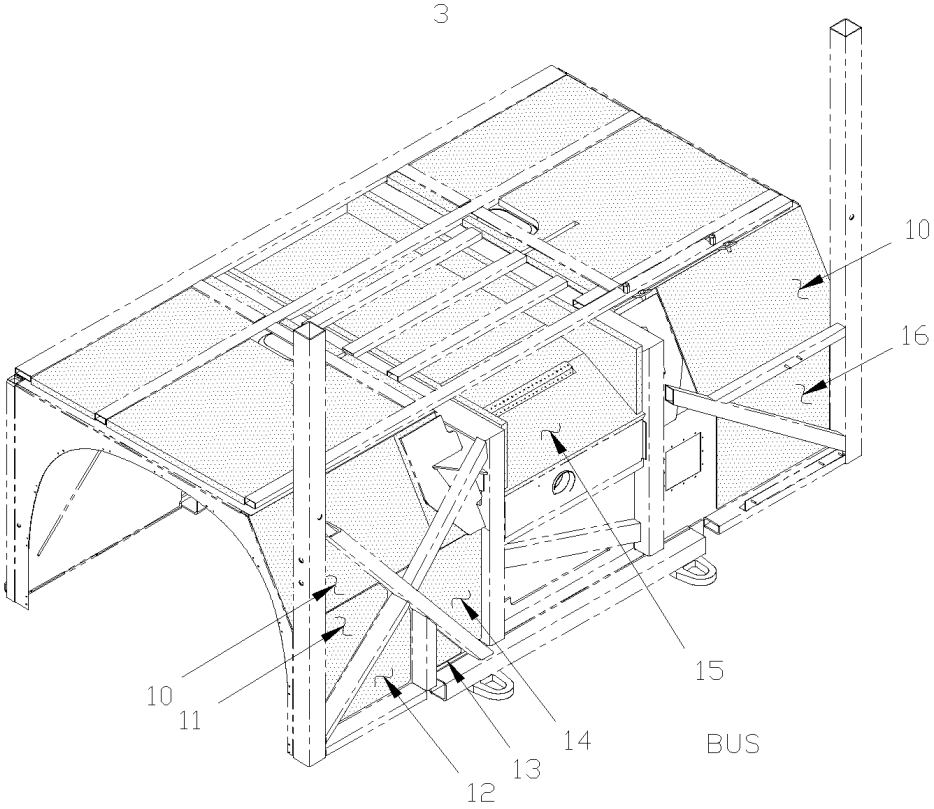

From Y-7046 To 8-9339		Date:07/2024	PAGE:Y2-1839-15

INSULATING FRONT - SUBFRAME

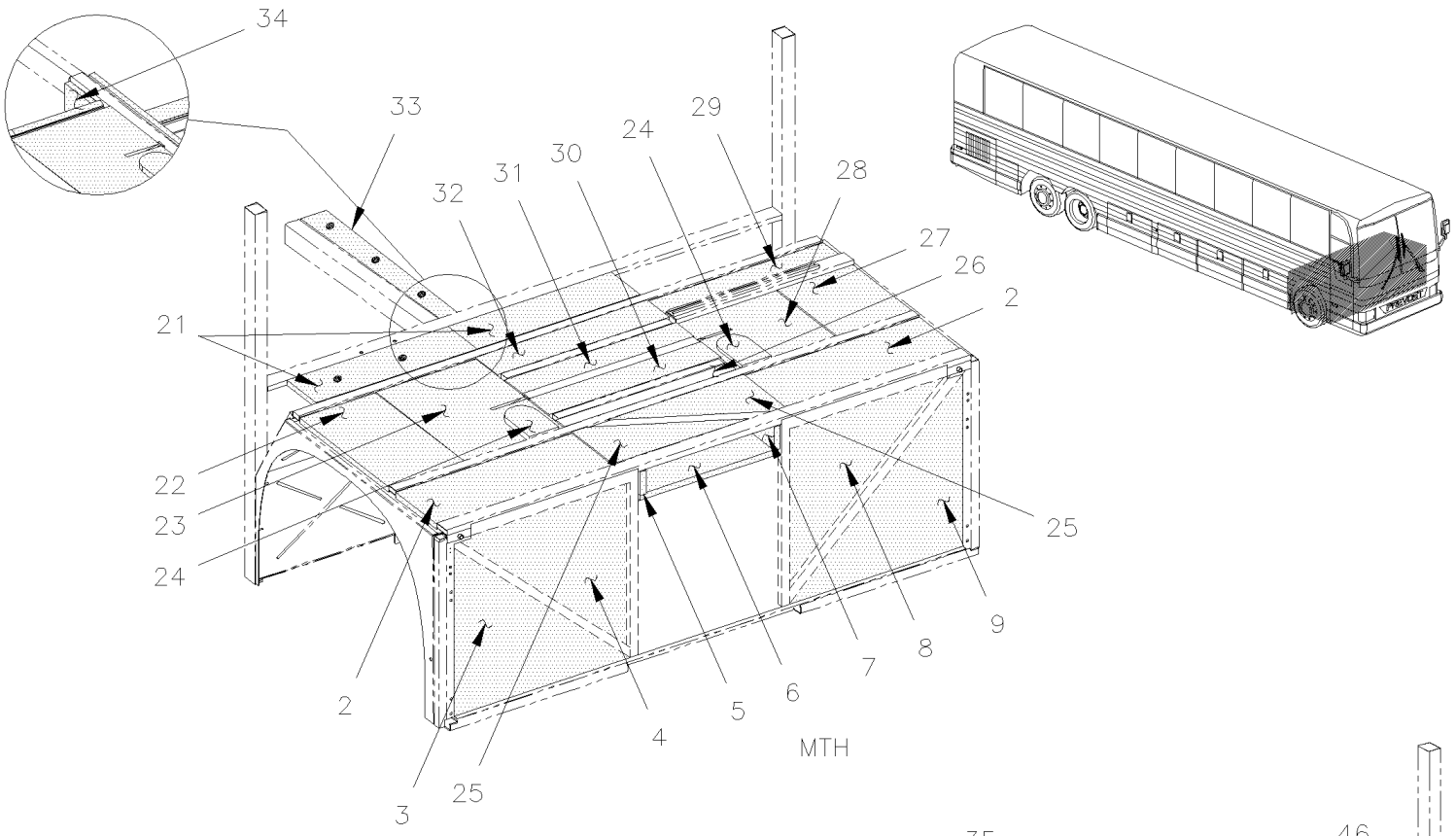

MTH

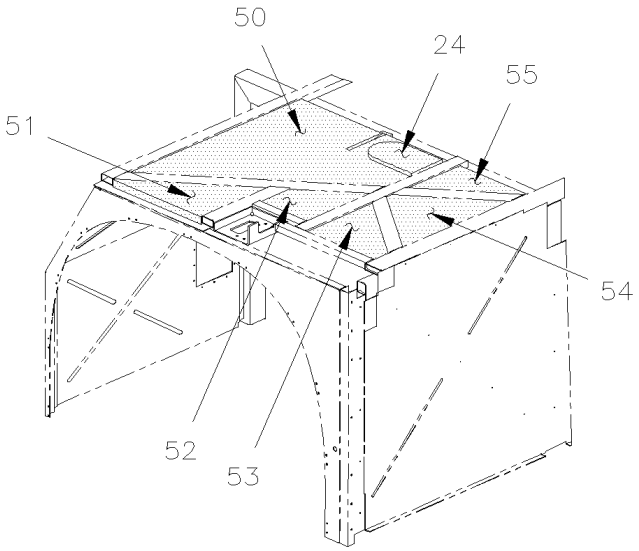

MTH—45' WITH "SLIDE—OUT"

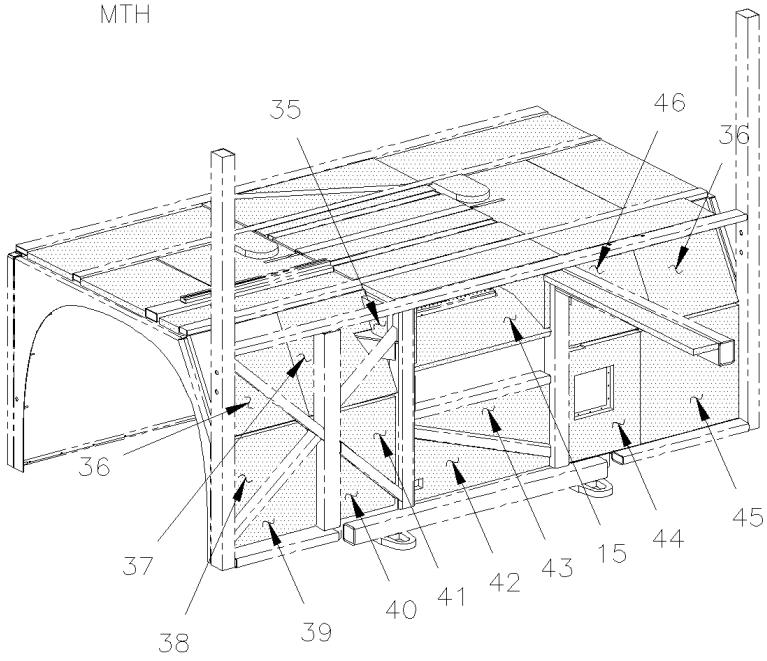

MTH

From Y-7046 To 8-9339		Date:07/2024	PAGE:Y2-1839-15

INSULATING FRONT - SUBFRAME

Item#	Part	Description	XLII 45	XLII MTH40	XLII MTH45	XLII MTH45E	NOTES
1	326973	INSULATING To 6-8906	1				R
1	327222	INSULATING To 6-8906	1				I
2	326511	INSULATING PAD 1" 1/16 To 6-8906	1				
3	326975	INSULATING To 2-7751	1				
3	327650	INSULATING From 2-7752 To 2-7806	1				
3	326503	INSULATING From 2-7806		1	1	1	
4	326976	INSULATING To 2-7751	1				
4	329059	INSULATING From 2-7752 To 2-7806	1				
4	326505	INSULATING To 2-7751	1	1	1	1	R
4	329061	INSULATING From 2-7752 To 2-7806	1	1	1	1	R
5	325357	INSULATING PAD NOISE 1"	1	1	1	1	
5	325360	INSULATING PAD 1"		1	1	1	
5	328748	INSULATING PAD NOISE 1" From 2-7752 To 6-8906	1				
6	326521	INSULATING PAD 1"1/16	1	1	1	1	
7	325360	INSULATING PAD 1" To 2-7751	1				
7	328748	INSULATING PAD NOISE 1"	1	1	1	1	
8	326977	INSULATING To 2-7751	1				
8	329060	INSULATING From 2-7752 To 2-7806	1				
8	326504	INSULATING To 2-7751	1	1	1	1	R
8	329062	INSULATING From 2-7752 To 2-7806	1	1	1	1	R
9	326978	INSULATING To 2-7751	1				
9	327649	INSULATING From 2-7752 To 2-7806	1				
9	326502	INSULATING To 2-7751		1	1	1	
9	329062	INSULATING From 2-7752 To 2-7806		1	1	1	
10	327223	INSULATING PAD NOISE 1/16"		1	1	1	I
10	326981	INSULATING PAD NOISE 1/16" To 6-8906	1				R
11	327021	INSULATING To 2-7881	1				R
11	327727	INSULATING From 2-7882 To 6-8906	1				R
12	326979	INSULATING To 2-7881	1				R
12	327728	INSULATING From 2-7882 To 6-8906	1				R
13	327020	INSULATING To 2-7881	1				R
13	327729	INSULATING From 2-7882 To 6-8906	1				R
14	327224	INSULATING To 2-7881		1	1	1	R
14	327022	INSULATING To 2-7881	1				R
14	327731	INSULATING From 2-7882 To 6-8906	1				R
NS	327732	INSULATING From 2-7882 To 6-8906	1				I
15	326520	INSULATING PAD 1"1/16	1	1	1	1	
16	326980	INSULATING	1	1	1	1	
17	327219	INSULATING		1	1	1	
17	327170	INSULATING To 6-8906	1				

From Y-7046 To 8-9339		Date:07/2024	PAGE:Y2-1839-15

INSULATING FRONT - SUBFRAME

Item#	Part	Description	XLII 45	XLII MTH40	XLII MTH45	XLII MTH45E	NOTES
19	327220	INSULATING		1	1	1	
20	327221	INSULATING		1	1	1	
21	326577	INSULATING PAD NOISE 1"		2	2	2	
22	326525	INSULATING		1	1	1	
23	326510	INSULATING		1	1	1	
24	326512	INSULATING		2	2	2	
25	325023	INSULATING PAD NOISE 1"		2	2	2	
26	326509	INSULATING		1	1	1	
27	326514	INSULATING		1	1	1	
28	326513	INSULATING		1	1	1	
29	326515	INSULATING		1	1	1	
30	325323	INSULATING PAD NOISE 1" To 4-8164		1	1	1	
30	351489	INSULATING From 4-8165		1	1	1	
31	325322	INSULATING		1	1	1	
32	326527	INSULATING To 4-8164		1	1	1	
32	351490	INSULATING From 4-8165		1	1	1	
33	326529	INSULATING		1	1	1	
34	326523	INSULATING		1	1	1	
35	326524	INSULATING		2	2	2	
36	326508	INSULATING		2	2	2	
37	326507	INSULATING To 4-8164		1	1	1	
37	351486	INSULATING From 4-8165		1	1	1	
39	326518	INSULATING To 2-7881		1	1	1	
40	326519	INSULATING To 2-7881		1	1	1	
42	327279	INSULATING		1	1	1	
43	327278	INSULATING		1	1	1	
44	326516	INSULATING To 4-8164		1	1	1	
44	351484	INSULATING From 4-8165		1	1	1	
45	326517	INSULATING		1	1	1	
46	326506	INSULATING To 4-8164		1	1	1	
46	351485	INSULATING From 4-8165		1	1	1	
50	327775	INSULATING			1		
51	327776	INSULATING			1		
52	327777	INSULATING			1		
53	327778	INSULATING			1		
54	327779	INSULATING			1		
55	327780	INSULATING			1		
		I) WITH INDEPANDANT SUSPENSION					
		R) WITH I BEAM RIGID SUSPENSION					

From Y-7046 To 6-8906		Date:07/2024	PAGE:Y2-1839-20
INSULATING FLOOR & REAR - BUS			

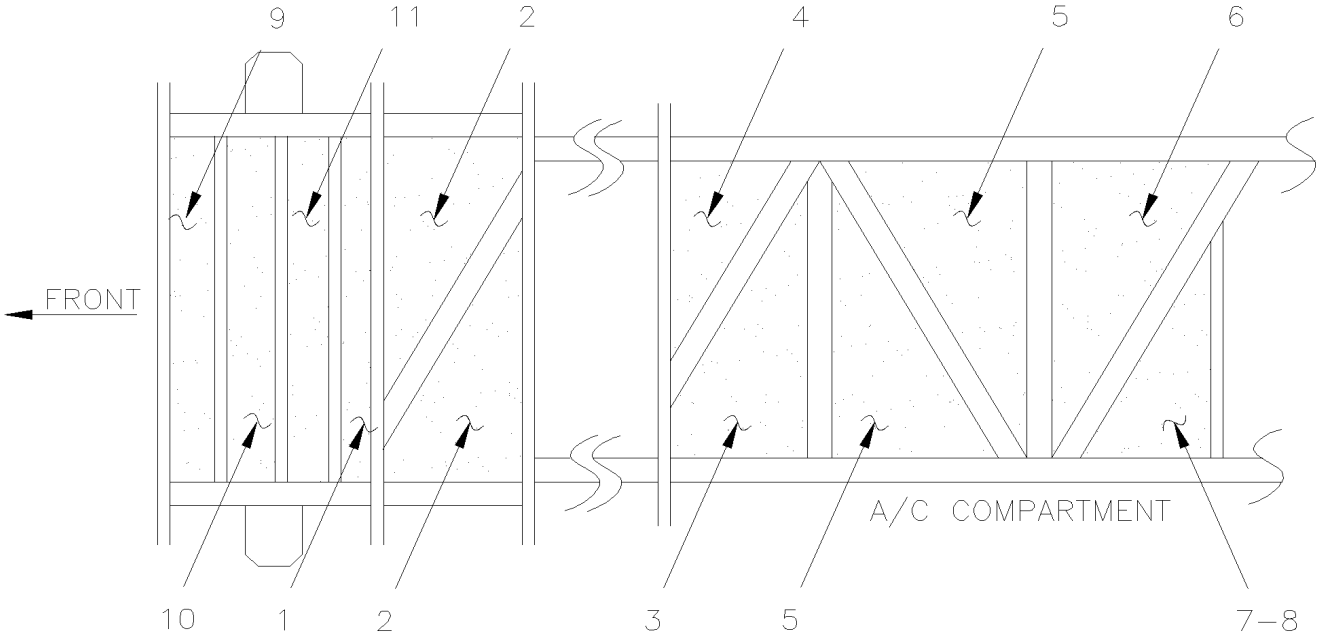

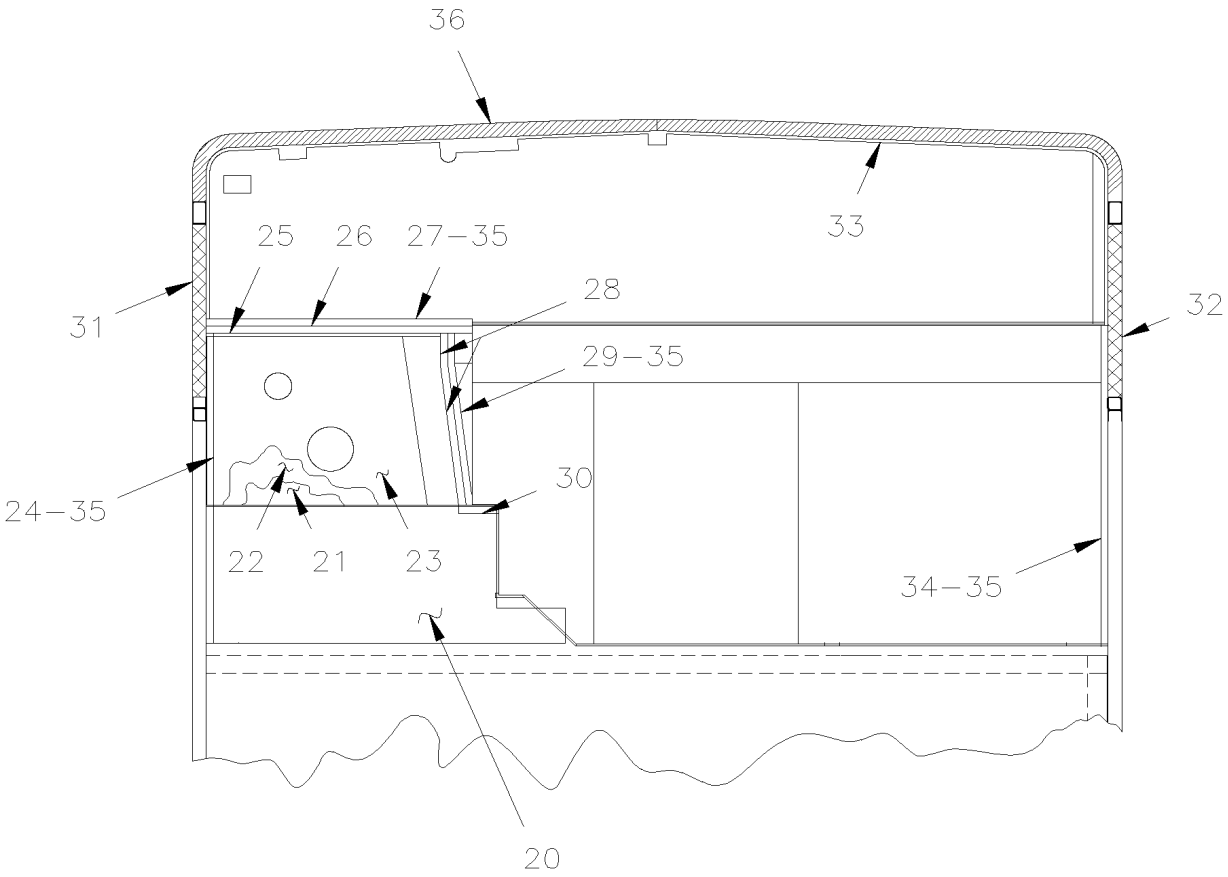

From Y-7046 To 6-8906		Date:07/2024	PAGE:Y2-1839-20

INSULATING FLOOR & REAR - BUS

Item#	Part	Description	XLII 45	XLII MTH40	XLII MTH45	XLII MTH45E	NOTES
1	328777	INSULATING PAD NOISE 1"	1				
2	325023	INSULATING PAD NOISE 1"	2				
3	324331	INSULATING PANEL	1				
4	324330	INSULATING PANEL	1				
5	324332	INSULATING PANEL	2				
6	324333	INSULATING PANEL	1				
7	324334	INSULATING PANEL	1				
8	680397	CONTACT GLUE / AEROSOL 17oz	AR				
9	328749	INSULATING PAD NOISE 1"	1				
10	325322	INSULATING	1				
11	325323	INSULATING PAD NOISE 1"	1				
20	324785	INSULATING PANEL	1				
21	324788	INSULATING PANEL	1				
22	325145	INSULATING PANEL	1				
23	325140	INSULATING PANEL	1				
24	326993	INSULATING PANEL	1				
25	325151	INSULATING PANEL	1				
26	326994	INSULATING PANEL	1				
27	326995	INSULATING PANEL	1				
28	325146	INSULATING PANEL	2				
29	324786	INSULATING PANEL	1				
30	325150	INSULATING PANEL	1				
31	326667	INSULATING	1				
32	326668	INSULATING	1				
33	326821	INSULATING PANEL	1				
34	326996	INSULATING PANEL	1				
35	680397	CONTACT GLUE / AEROSOL 17oz	AR				
36	326820	INSULATING	1				

From 8-9279 To 8-9339		Date:07/2024	PAGE:Y2-1839-25
INSULATING - REAR DPF FILTER			

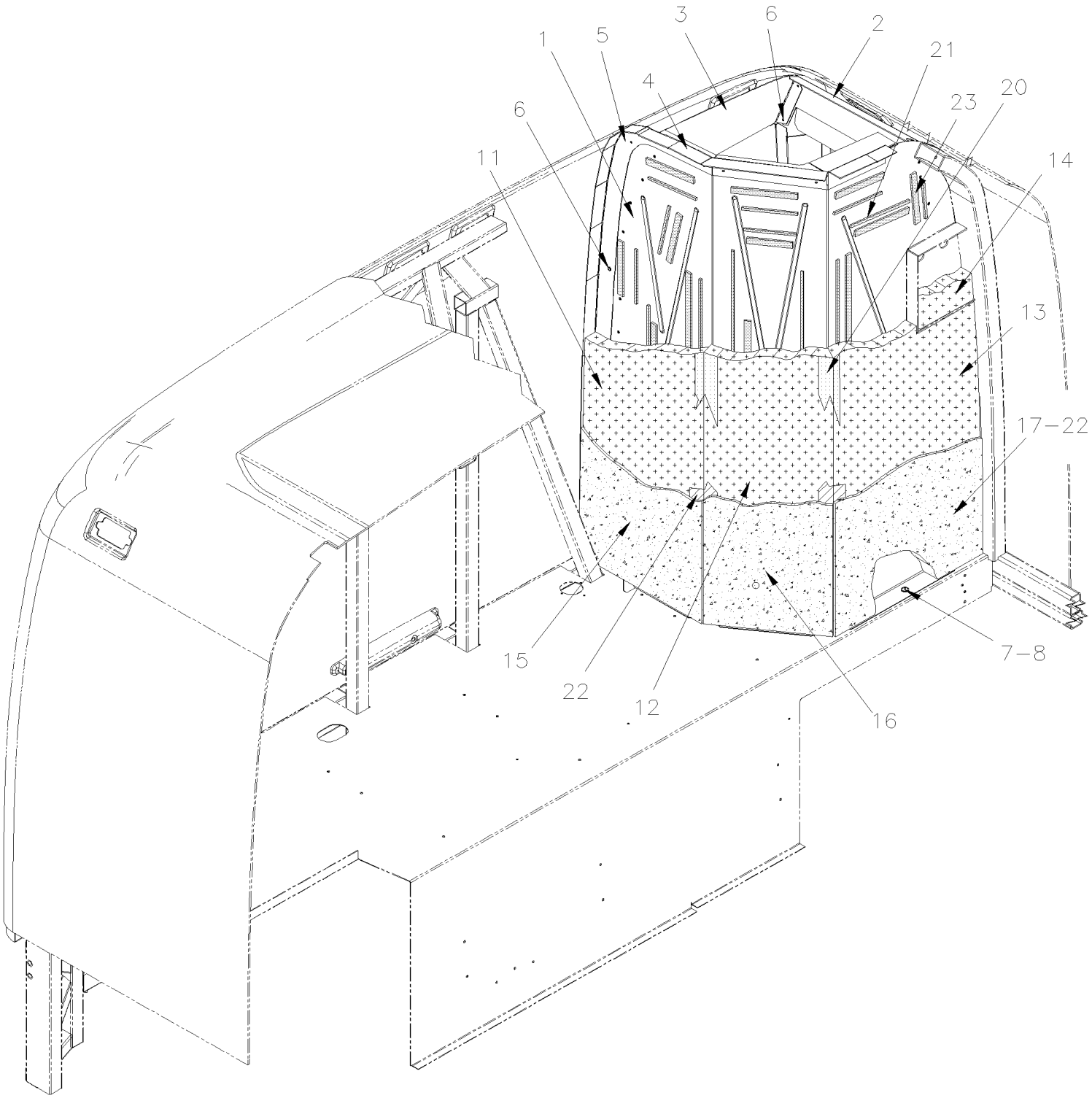

From 8-9279 To 8-9339		Date:07/2024	PAGE:Y2-1839-25

INSULATING - REAR DPF FILTER

Item#	Part	Description	XLII 45	XLII MTH40	XLII MTH45	XLII MTH45E	NOTES
1	351846	WALL SHEET PANEL			1		
1	351835	WALL SHEET PANEL				1	
2	351828	PANEL FIRE WALL			1	1	
3	351834	PANEL FIRE WALL			1	1	
4	351847	ANGLE RETAINER			1	1	
5	351843	ANGLE RETAINER			1	1	
6	504488	RIVET MGLP PRDG 3/16x17/64 SS			17	17	
7	504459	RIVET MGLP PRDG 1/4x3/8 SS			17	17	
8	500411	WASHER FL .260x.697x.050 SS			17	17	
10	351848	KIT INSULATING PANEL			1		
10	351829	KIT INSULATING PANEL				1	
11	351850	. INSULATING PANEL INTERIOR CURBSIDE			1		
11	351845	. INSULATING PANEL INTERIOR CURBSIDE				1	
12	351844	. INSULATING PANEL INTERIOR CENTER			1		
12	351813	. INSULATING PANEL INTERIOR CENTER				1	
13	351849	. INSULATING PANEL INTERIOR STREETSIDE			1		
13	351812	. INSULATING PANEL INTERIOR STREETSIDE				1	
14	351818	. INSULATING PANEL INTERIOR SUPPORT			1	1	
15	351819	INSULATING PANEL EXTERIOR CURBSIDE			1	1	
16	351820	INSULATING PANEL EXTERIOR CENTER			1	1	
17	351817	INSULATING PANEL EXTERIOR STREETSIDE			1	1	
20	682484	TAPE ALUMINUM ADH1 .005" x 3" x 300' ALUMINUM FSK3"			AR	AR	
21	507000	TAPE RUB ADH2 POL 3/16" x 1/4" x 50' / BLACK V2206			AR	AR	
22	680052	GLUE, CONTACT ADBOND 8399 4 LITER			1	1	
23	684517	ADHESIVE SIMSON #ISR 70-03 / GREY / 310ml CARTRIDGE			AR	AR	

From Y-7046 To 8-9339		Date:07/2024	PAGE:Y2-1839-30
INSULATING ROOF PANELS			

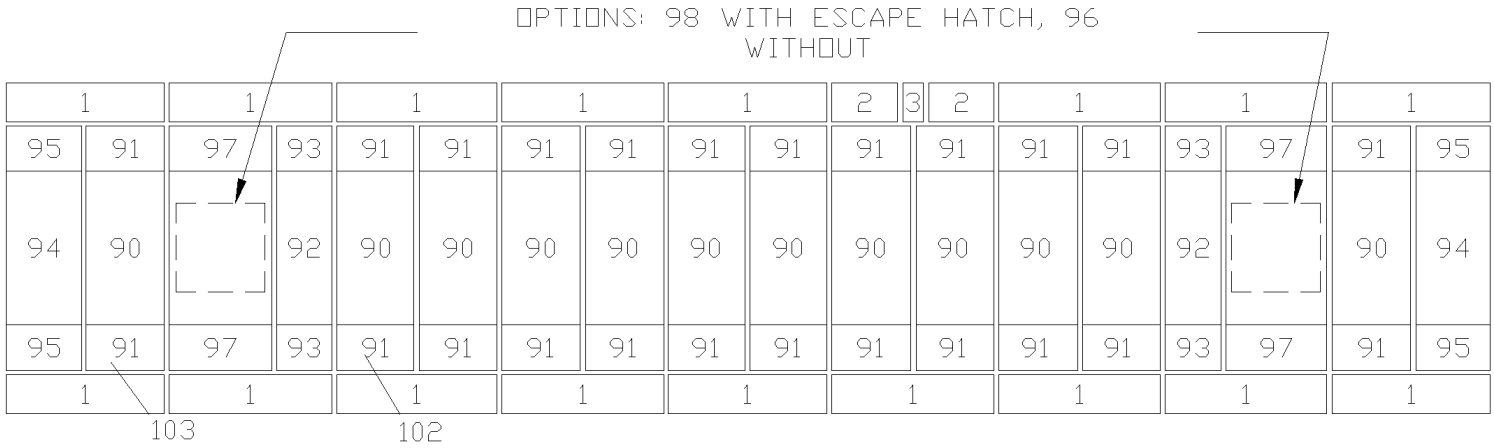

BUS & MTH 45

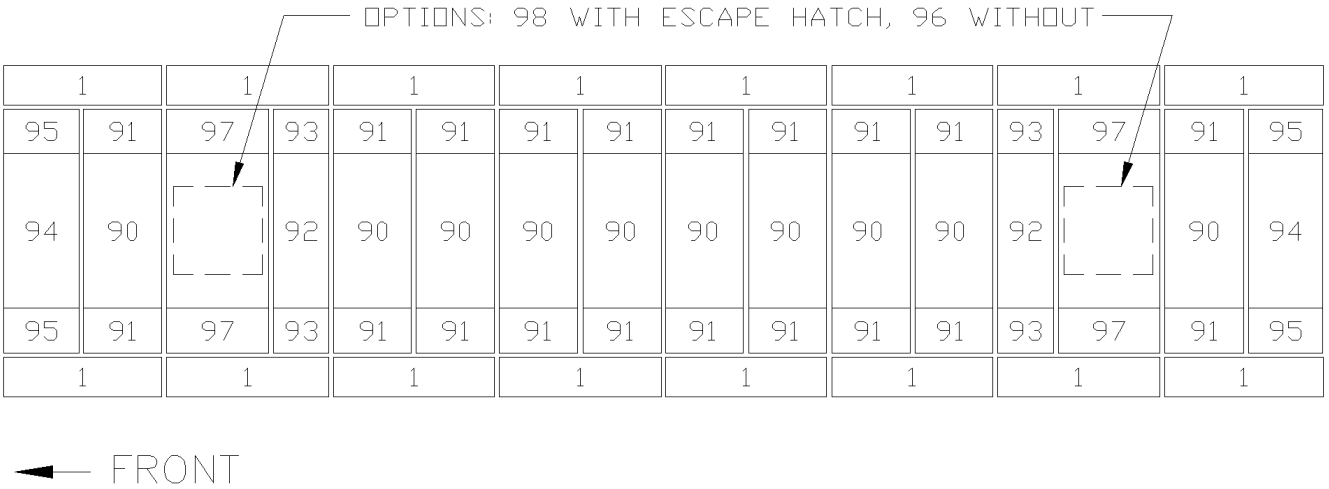

BUS & MTH 40

From Y-7046 To 8-9339		Date:07/2024	PAGE:Y2-1839-30

INSULATING ROOF PANELS

Item#	Part	Description	XLII 45	XLII MTH40	XLII MTH45	XLII MTH45E	NOTES
	350794	KIT ROOF INSULATING PANEL			1	1	
	354333	KIT ROOF INSULATING PANEL			1	1	
	350795	KIT ROOF INSULATING PANEL To 5-8813		1			
	350841	KIT INSULATING ROOF PANEL To 6-8906	1				
	351321	KIT ROOF SIDE INSULATING PANEL	1		1	1	
	351323	KIT ROOF SIDE INSULATING PANEL To 5-8813		1			
	351371	KIT ROOF INSILATING PANEL / W/SLIDE OUT From 2-7922			1		
1	351316	. INSULATING PANEL	17		17	17	
1	351316	. INSULATING PANEL To 5-8813		16			
2	351317	. INSULATING PANEL	2		2	2	
3	351319	. INSULATING PANEL	1		1	1	
90	350713	. INSULATING PANEL To 5-8813		10			
90	350713	. INSULATING PANEL	12		12	12	
91	350714	. INSULATING PANEL To 5-8813		20			
91	350714	. INSULATING PANEL	24		24	24	
92	350715	. INSULATING PANEL	2	2	2	2	
93	350716	. INSULATING PANEL	4	4	4	4	
94	350717	. INSULATING PANEL	2	2	2	2	
95	350719	. INSULATING PANEL	4	4	4	4	
96	350725	. INSULATING PANEL To 6-8906	1				
96	350725	. INSULATING PANEL		2	2	2	
97	350734	. INSULATING PANEL	4	4	4	4	
98	350738	. INSULATING PANEL/ W/EMERGENCY EXIT To 6-8906	1				
102	351337	. INSULATING PANEL / W/SLIDE OUT From 2-7922			1		
103	351365	. INSULATING PANEL / W/SLIDE OUT From 2-7922			1		

From Y-7046 To 2-7702		Date:07/2024	PAGE:Y2-1839-50
INSULATING SIDE WALL - LOWER PANEL - MTH			

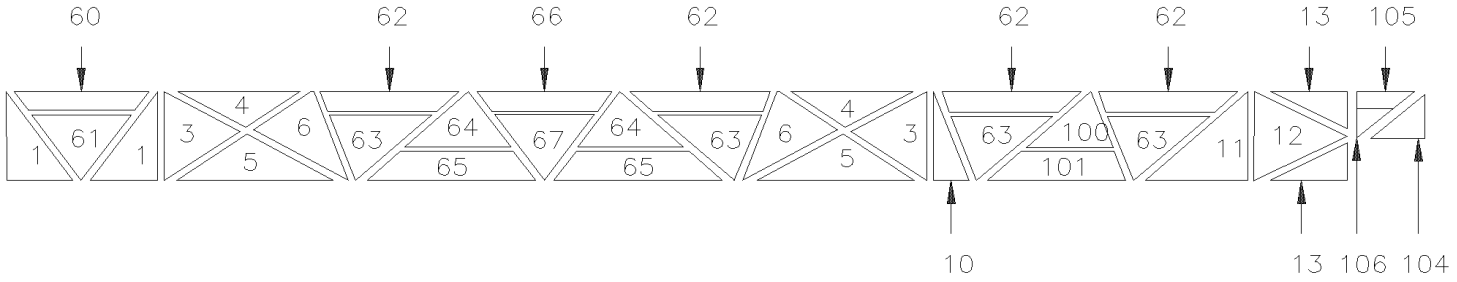

MTH 45', 83" & 86"

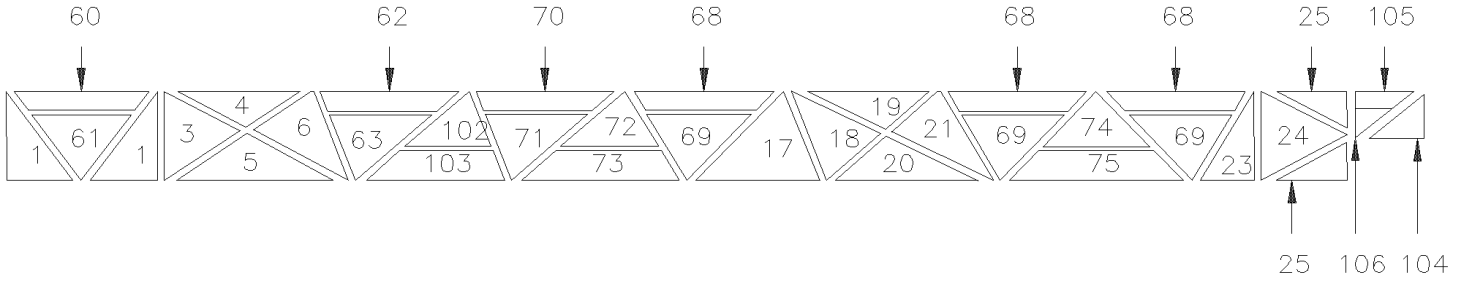

MTH 45', ENT 86"

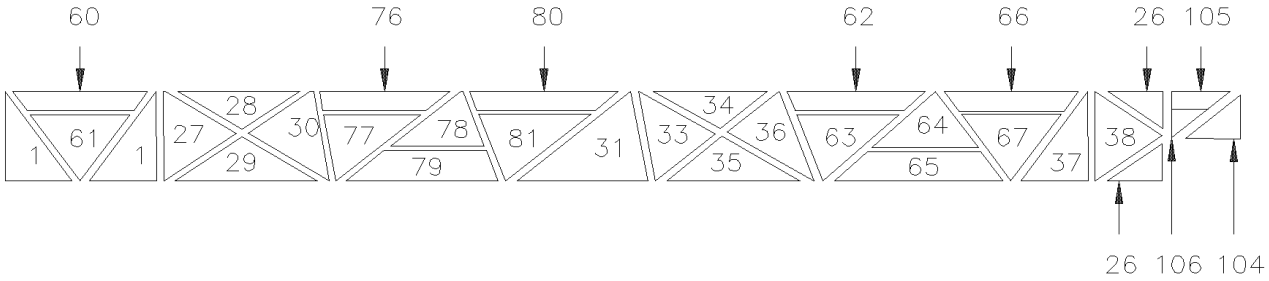

MTH 40', 83" & 86"

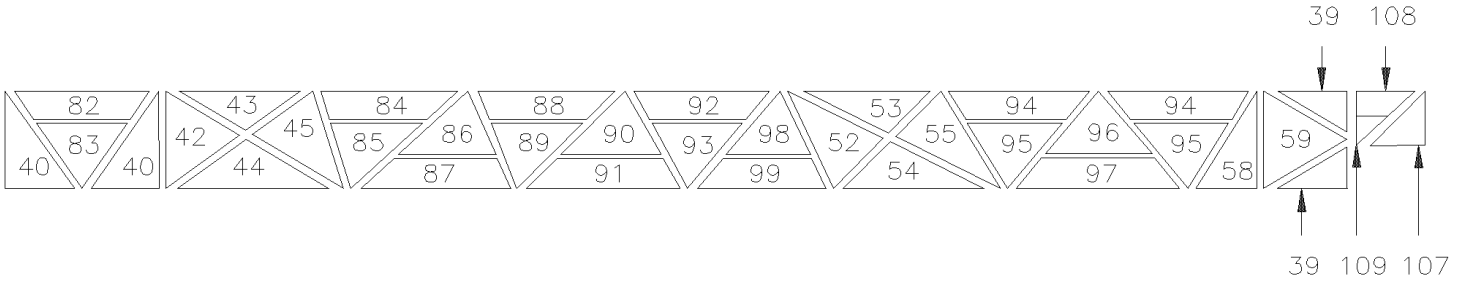

MTH 45', ENT 89"

VIEWS ARE RH FROM INSIDE

From Y-7046 To 2-7702		Date:07/2024	PAGE:Y2-1839-50

INSULATING SIDE WALL - LOWER PANEL - MTH

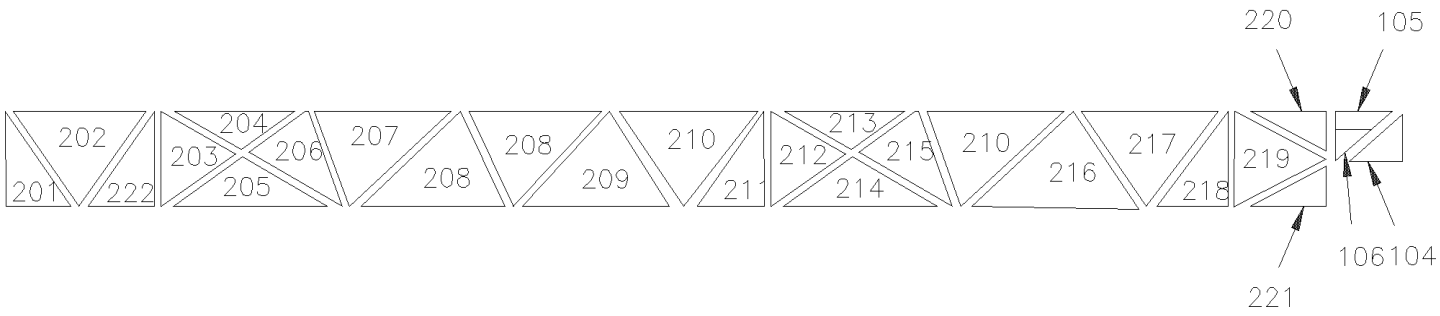

MTH 45', ENT 86" W/PLAIN PANEL

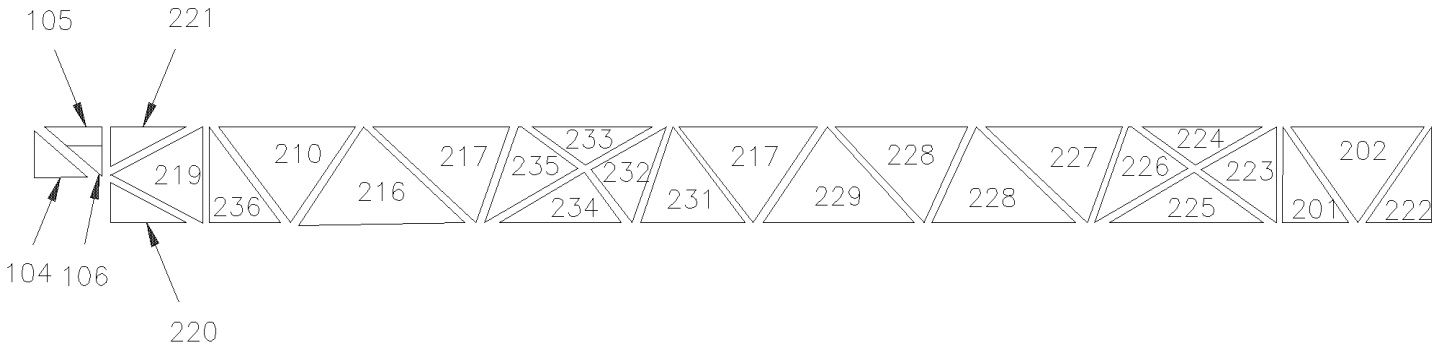

MTH 45', ENT 86" W/PLAIN PANEL

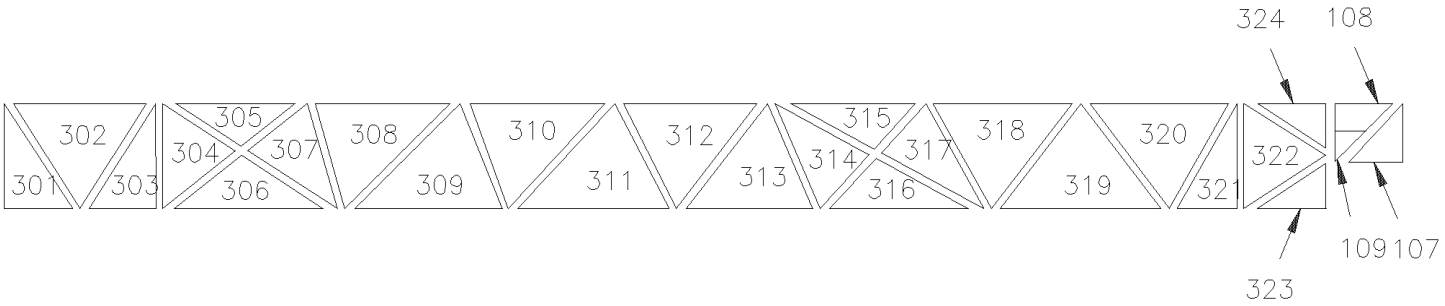

MTH 45', ENT 89" W/PLAIN PANEL

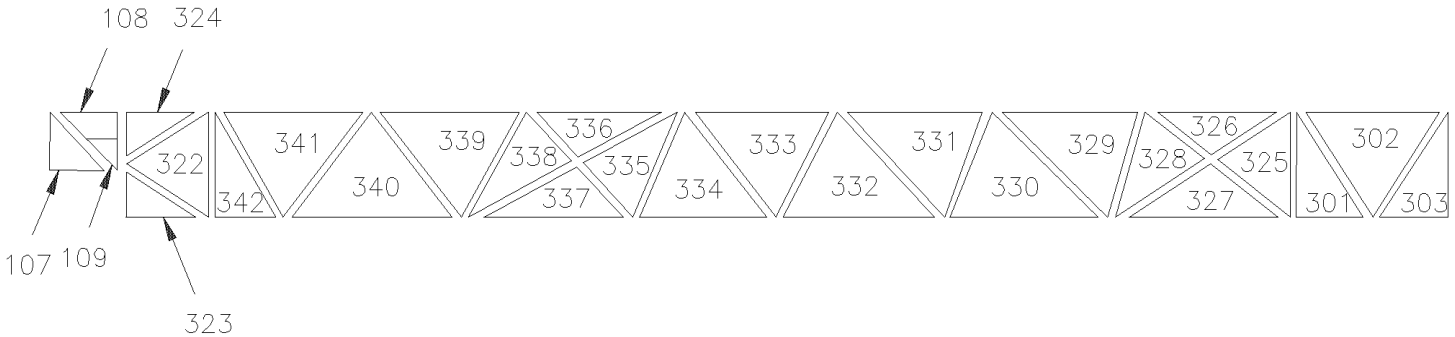

MTH 45', ENT 89" W/PLAIN PANEL

From Y-7046 To 2-7702		Date:07/2024	PAGE:Y2-1839-50

INSULATING SIDE WALL - LOWER PANEL - MTH

Item#	Part	Description	XLII 45	XLII MTH40	XLII MTH45	XLII MTH45E	NOTES
	350786	KIT INSULATING PANEL To 5-8813		2			
	350718	KIT INSULATING PANEL			2		
	350749	KIT INSULATING PANEL 86" HEIGHT				2	A
	350840	KIT INSULATING PANEL 89" HEIGHT				2	A
	351048	KIT INSULTING R.H. PANEL 86" HEIGHT				1	B
	351049	KIT INSULTING L.H. PANEL 86" HEIGHT				1	B
	351105	KIT INSULTING R.H. PANEL 89" HEIGHT				1	B
	351106	KIT INSULTING L.H. PANEL 89" HEIGHT				1	B
1	350691	. SIDE INSULATION PANEL		4	4	4	
3	350694	. SIDE INSULATION PANEL			4		
3	350694	. SIDE INSULATION PANEL				2	
4	350695	. SIDE INSULATION PANEL			4		
4	350695	. SIDE INSULATION PANEL				2	
5	350696	. SIDE INSULATION PANEL			4		
5	350696	. SIDE INSULATION PANEL				2	
6	350697	. SIDE INSULATION PANEL			4		
6	350697	. SIDE INSULATION PANEL				2	
10	350707	. SIDE INSULATION PANEL			2		
11	350710	. SIDE INSULATION PANEL			2		
12	350711	. SIDE INSULATION PANEL			2		
13	350712	. SIDE INSULATION PANEL			4		
17	350728	. SIDE INSULATION PANEL				2	
18	350729	. SIDE INSULATION PANEL				2	
19	350730	. SIDE INSULATION PANEL				2	
20	350731	. SIDE INSULATION PANEL				2	
21	350732	. SIDE INSULATION PANEL				2	
23	350735	. SIDE INSULATION PANEL				2	
24	350736	. SIDE INSULATION PANEL				2	
25	350737	. SIDE INSULATION PANEL				4	
26	350776	. SIDE INSULATION PANEL To 5-8813		4			
27	350759	. SIDE INSULATION PANEL To 5-8813		2			
28	350760	. SIDE INSULATION PANEL To 5-8813		2			
29	350761	. SIDE INSULATION PANEL To 5-8813		2			
30	350762	. SIDE INSULATION PANEL To 5-8813		2			
31	350763	. SIDE INSULATION PANEL To 5-8813		2			
33	350767	. SIDE INSULATION PANEL To 5-8813		2			
34	350768	. SIDE INSULATION PANEL To 5-8813		2			
35	350769	. SIDE INSULATION PANEL To 5-8813		2			
36	350770	. SIDE INSULATION PANEL To 5-8813		2			
37	350774	. SIDE INSULATION PANEL To 5-8813		2			
38	350775	. SIDE INSULATION PANEL To 5-8813		2			
39	350818	. SIDE INSULATION PANEL				4	

From Y-7046 To 2-7702		Date:07/2024	PAGE:Y2-1839-50

INSULATING SIDE WALL - LOWER PANEL - MTH

Item#	Part	Description	XLII 45	XLII MTH40	XLII MTH45	XLII MTH45E	NOTES
40	350796	. SIDE INSULATION PANEL				4	
42	350799	. SIDE INSULATION PANEL				2	
43	350800	. SIDE INSULATION PANEL				2	
44	350801	. SIDE INSULATION PANEL				2	
45	350802	. SIDE INSULATION PANEL				2	
52	350809	. SIDE INSULATION PANEL				2	
53	350810	. SIDE INSULATION PANEL				2	
54	350811	. SIDE INSULATION PANEL				2	
55	350812	. SIDE INSULATION PANEL				2	
58	350816	. SIDE INSULATION PANEL				2	
59	350817	. SIDE INSULATION PANEL				2	
60	350848	. SIDE INSULATION PANEL		2	2	2	
61	350849	. SIDE INSULATION PANEL		2	2	2	
62	350850	. SIDE INSULATION PANEL		2		2	
62	350850	. SIDE INSULATION PANEL			8		
63	350851	. SIDE INSULATION PANEL		2		2	
63	350851	. SIDE INSULATION PANEL			8		
64	350852	. SIDE INSULATION PANEL		2	2		
65	350853	. SIDE INSULATION PANEL		2			
65	350853	. SIDE INSULATION PANEL			4		
66	350854	. SIDE INSULATION PANEL		2			
66	350854	. SIDE INSULATION PANEL			4		
67	350855	. SIDE INSULATION PANEL		2	2		
68	350864	. SIDE INSULATION PANEL				6	
69	350865	. SIDE INSULATION PANEL				6	
70	350860	. SIDE INSULATION PANEL				2	
71	350861	. SIDE INSULATION PANEL				2	
72	350862	. SIDE INSULATION PANEL				2	
73	350863	. SIDE INSULATION PANEL				2	
74	350866	. SIDE INSULATION PANEL				2	
75	350867	. SIDE INSULATION PANEL				2	
76	350868	. SIDE INSULATION PANEL To 5-8813		2			
77	350869	. SIDE INSULATION PANEL To 5-8813		2			
78	350870	. SIDE INSULATION PANEL To 5-8813		2			
79	350871	. SIDE INSULATION PANEL To 5-8813		2			
80	350872	. SIDE INSULATION PANEL To 5-8813		2			
81	350873	. SIDE INSULATION PANEL To 5-8813		2			
82	350874	. SIDE INSULATION PANEL				2	
83	350875	. SIDE INSULATION PANEL				2	
84	350876	. SIDE INSULATION PANEL				2	
85	350877	. SIDE INSULATION PANEL				2	
86	350878	. SIDE INSULATION PANEL				2	

From Y-7046 To 2-7702		Date:07/2024	PAGE:Y2-1839-50

INSULATING SIDE WALL - LOWER PANEL - MTH

Item#	Part	Description	XLII 45	XLII MTH40	XLII MTH45	XLII MTH45E	NOTES
87	350879	. SIDE INSULATION PANEL				2	
88	350880	. SIDE INSULATION PANEL				2	
89	350881	. SIDE INSULATION PANEL				2	
90	350882	. SIDE INSULATION PANEL				2	
91	350883	. SIDE INSULATION PANEL				2	
92	350884	. SIDE INSULATION PANEL				2	
93	350885	. SIDE INSULATION PANEL				2	
94	350888	. SIDE INSULATION PANEL				4	
95	350889	. SIDE INSULATION PANEL				4	
96	350890	. SIDE INSULATION PANEL				2	
97	350891	. SIDE INSULATION PANEL				2	
98	350886	. SIDE INSULATION PANEL				2	
99	350887	. SIDE INSULATION PANEL				2	
100	350856	. SIDE INSULATION PANEL			2		
101	350857	. SIDE INSULATION PANEL			2		
102	350858	. SIDE INSULATION PANEL				2	
103	350859	. SIDE INSULATION PANEL				2	
104	350943	. SIDE INSULATION PANEL		1	1	1	
105	350944	. SIDE INSULATION PANEL		1	1	1	
106	350945	. SIDE INSULATION PANEL		1	1	1	
107	350946	. SIDE INSULATION PANEL				1	
108	350947	. SIDE INSULATION PANEL				1	
109	350948	. SIDE INSULATION PANEL				1	
201	351005	. SIDE INSULATION PANEL				2	
202	351006	. SIDE INSULATION PANEL				2	
203	351007	. SIDE INSULATION PANEL				1	
204	351008	. SIDE INSULATION PANEL				1	
205	351009	. SIDE INSULATION PANEL				1	
206	351010	. SIDE INSULATION PANEL				1	
207	351011	. SIDE INSULATION PANEL				1	
208	351012	. SIDE INSULATION PANEL				2	
209	351013	. SIDE INSULATION PANEL				1	
210	351014	. SIDE INSULATION PANEL				2	
211	351015	. SIDE INSULATION PANEL				1	
212	351016	. SIDE INSULATION PANEL				1	
213	351017	. SIDE INSULATION PANEL				1	
214	351018	. SIDE INSULATION PANEL				1	
215	351019	. SIDE INSULATION PANEL				1	
216	351020	. SIDE INSULATION PANEL				2	
217	351021	. SIDE INSULATION PANEL				2	
218	351022	. SIDE INSULATION PANEL				1	
219	351023	. SIDE INSULATION PANEL				2	

From Y-7046 To 2-7702		Date:07/2024	PAGE:Y2-1839-50

INSULATING SIDE WALL - LOWER PANEL - MTH

Item#	Part	Description	XLII 45	XLII MTH40	XLII MTH45	XLII MTH45E	NOTES
220	351024	. SIDE INSULATION PANEL				2	
221	351025	. SIDE INSULATION PANEL				2	
222	351026	. SIDE INSULATION PANEL				2	
223	351027	. SIDE INSULATION PANEL				1	
224	351028	. SIDE INSULATION PANEL				1	
225	351029	. SIDE INSULATION PANEL				1	
226	351030	. SIDE INSULATION PANEL				1	
227	351031	. SIDE INSULATION PANEL				1	
228	351032	. SIDE INSULATION PANEL				2	
229	351033	. SIDE INSULATION PANEL				1	
231	351035	. SIDE INSULATION PANEL				1	
232	351036	. SIDE INSULATION PANEL				1	
233	351037	. SIDE INSULATION PANEL				1	
234	351038	. SIDE INSULATION PANEL				1	
235	351039	. SIDE INSULATION PANEL				1	
236	351040	. SIDE INSULATION PANEL				1	
301	351063	. SIDE INSULATION PANEL				2	
302	351064	. SIDE INSULATION PANEL				2	
303	351065	. SIDE INSULATION PANEL				2	
304	351066	. SIDE INSULATION PANEL				1	
305	351067	. SIDE INSULATION PANEL				1	
306	351068	. SIDE INSULATION PANEL				1	
307	351069	. SIDE INSULATION PANEL				1	
308	351070	. SIDE INSULATION PANEL				1	
309	351071	. SIDE INSULATION PANEL				1	
310	351072	. SIDE INSULATION PANEL				1	
311	351073	. SIDE INSULATION PANEL				1	
312	351074	. SIDE INSULATION PANEL				1	
314	351076	. SIDE INSULATION PANEL				1	
315	351077	. SIDE INSULATION PANEL				1	
316	351078	. SIDE INSULATION PANEL				1	
317	351079	. SIDE INSULATION PANEL				1	
318	351080	. SIDE INSULATION PANEL				1	
319	351081	. SIDE INSULATION PANEL				1	
320	351082	. SIDE INSULATION PANEL				1	
321	351083	. SIDE INSULATION PANEL				1	
322	351084	. SIDE INSULATION PANEL				2	
323	351085	. SIDE INSULATION PANEL				2	
324	351086	. SIDE INSULATION PANEL				2	
325	351087	. SIDE INSULATION PANEL				1	
326	351088	. SIDE INSULATION PANEL				1	
327	351089	. SIDE INSULATION PANEL				1	

From Y-7046 To 2-7702		Date:07/2024	PAGE:Y2-1839-50

INSULATING SIDE WALL - LOWER PANEL - MTH

Item#	Part	Description	XLII 45	XLII MTH40	XLII MTH45	XLII MTH45E	NOTES
328	351090	. SIDE INSULATION PANEL				1	
329	351091	. SIDE INSULATION PANEL				1	
330	351092	. SIDE INSULATION PANEL				1	
331	351093	. SIDE INSULATION PANEL				1	
332	351094	. SIDE INSULATION PANEL				1	
333	351095	. SIDE INSULATION PANEL				1	
334	351096	. SIDE INSULATION PANEL				1	
335	351097	. SIDE INSULATION PANEL				1	
336	351098	. SIDE INSULATION PANEL				1	
337	351099	. SIDE INSULATION PANEL				1	
338	351100	. SIDE INSULATION PANEL				1	
339	351101	. SIDE INSULATION PANEL				1	
340	351102	. SIDE INSULATION PANEL				1	
341	351103	. SIDE INSULATION PANEL				1	
342	351104	. SIDE INSULATION PANEL				1	
NS	850065	ALUMINUM WALL COVERING ADHESIVE / 32 1/4" X 455"			2		
NS	850066	ALUMINUM WALL COVERING ADHESIVE / 32 1/4" X 415" To 5-8813		2			
NS	850070	ALUMINUM WALL COVERING ADHESIVE / 36" X 438"				2	
NS	684196	PRIMER ELASTOCOL # 593		AR	AR	AR	
NS	320104	INSULATING PLATE / ALUMINUM 18GA / "E" SHAPE 90MM X 102MM		AR	AR	AR	
		A) MTH ENTERTAINER WITH STAINLESS STEEL UPPER PANELLING					
		B) MTH ENTERTAINER WITH FLAT PANELLING					

From 2-7703 To 8-9339		Date:07/2024	PAGE:Y2-1839-51

INSULATING SIDE WALL - LOWER PANEL - MTH

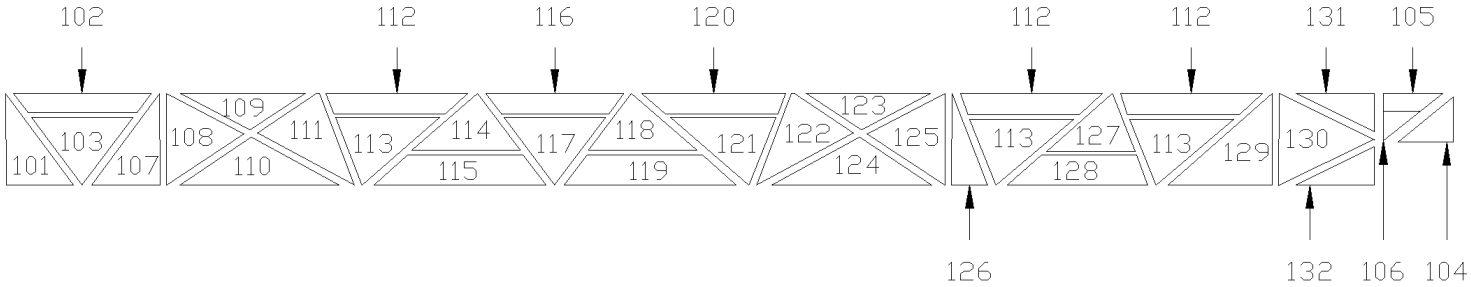

MTH 45' LH

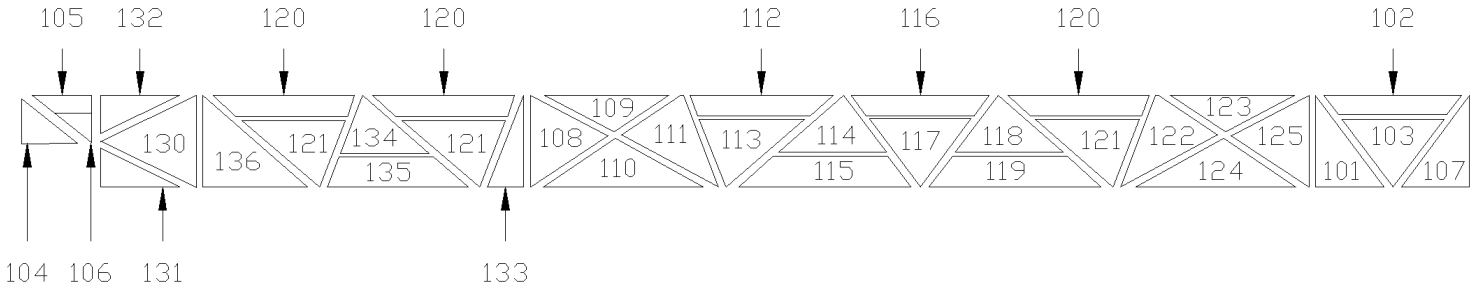

MTH 45' RH

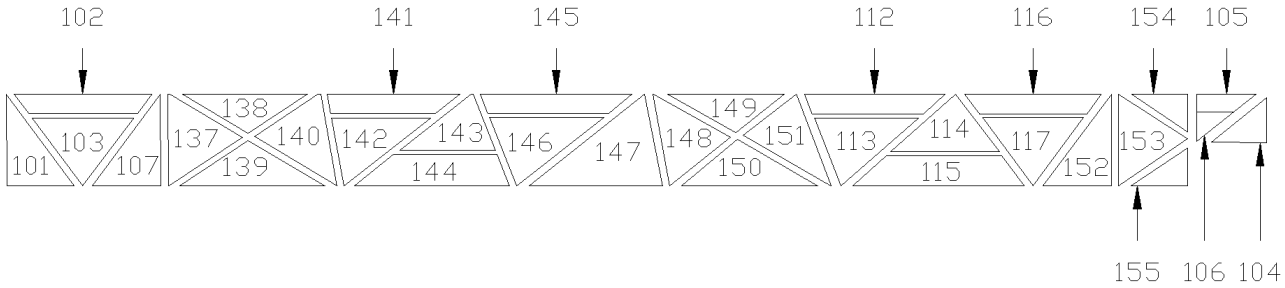

MTH 40' LH

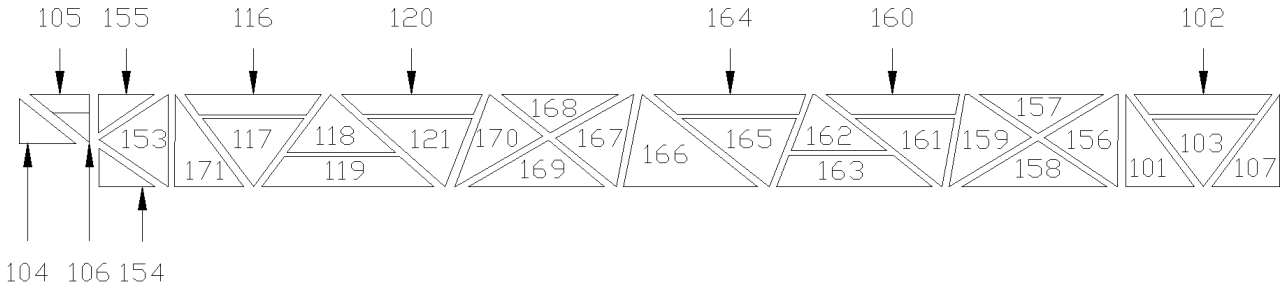

MTH 40' RH

VIEWS ARE FROM THE OUTSIDE OF VEHICULE

From 2-7703 To 8-9339		Date:07/2024	PAGE:Y2-1839-51
INSULATING SIDE WALL - LOWER PANEL - MTH			

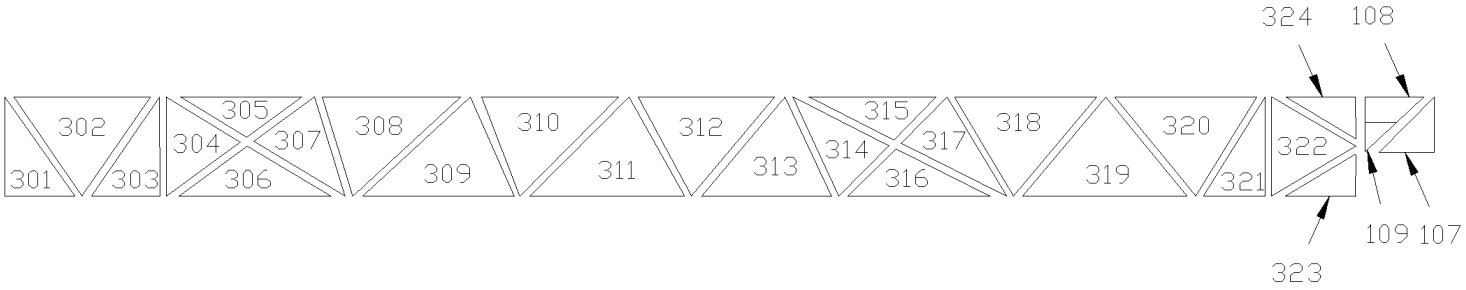

MTH 45', ENT 89" RH

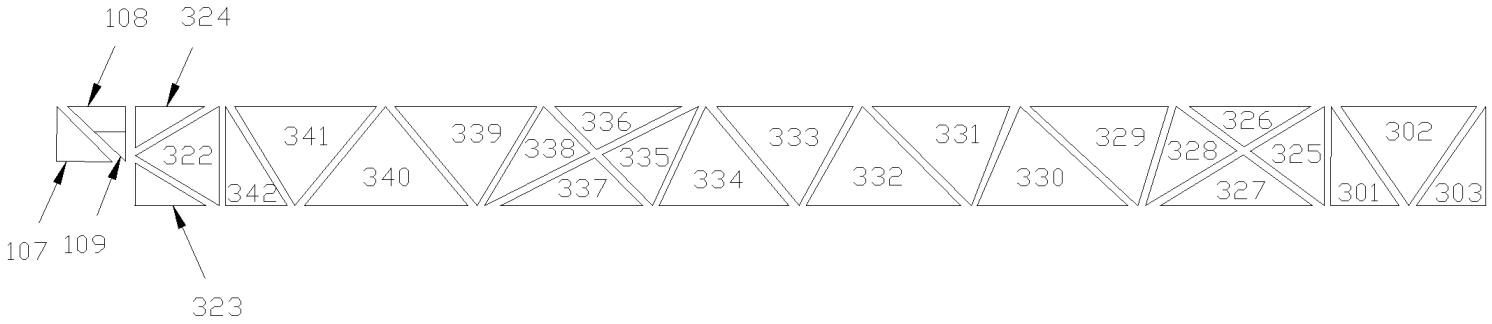

MTH 45', ENT 89" LH

From 2-7703 To 8-9339		Date:07/2024	PAGE:Y2-1839-51
INSULATING SIDE WALL - LOWER PANEL - MTH			

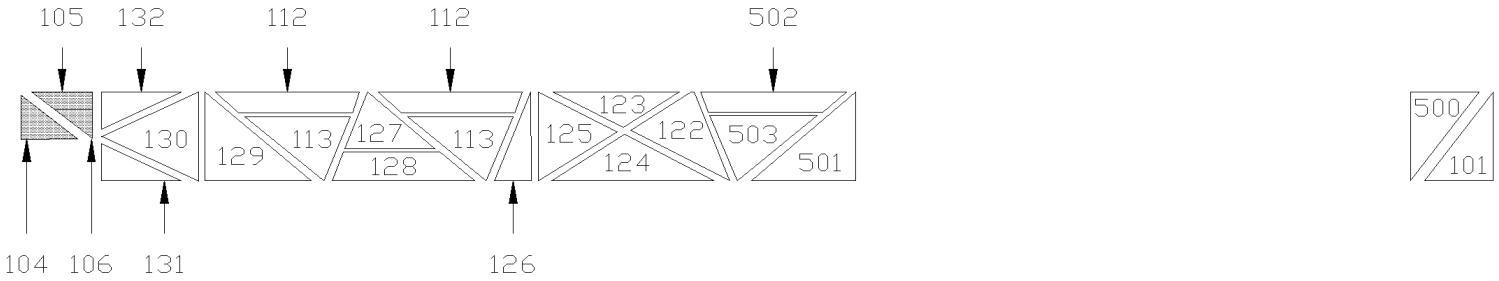

MTH 45', SLIDE-OUT, SINGLE CASE, LH

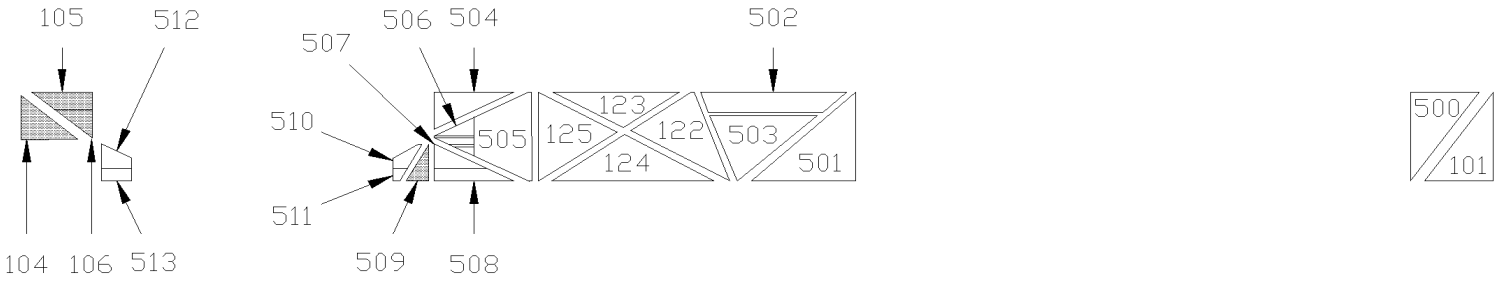

MTH 45', SLIDE-OUT, DOUBLE CASE, LH

INSIDE INSTALLATION

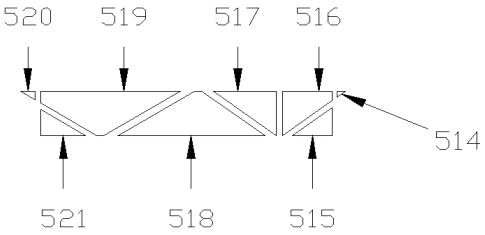

MTH 45', SLIDE-OUT, DOUBLE CASE, LH

OUTSIDE INSTALLATION

From 2-7703 To 8-9339		Date:07/2024	PAGE:Y2-1839-51

INSULATING SIDE WALL - LOWER PANEL - MTH

Item#	Part	Description	XLII 45	XLII MTH40	XLII MTH45	XLII MTH45E	NOTES
	351139	KIT INSULATING PANEL L.H. WALL To 3-8164			1		
	351338	KIT INSULATING PANEL L.H. WALL From 4-8165			1		
	351384	KIT INSULATING PANEL L.H. WALL / W/SLIDE OUT From 3-8109 To 3-8164			1		B
	351420	KIT INSULATING PANEL L.H. WALL / W/SLIDE OUT From 4-8165 To 6-8805			1		B
	351519	KIT INSULATING PANEL L.H. WALL / W/SLIDE OUT From 6-8806			1		B
	351315	KIT INSULATING PANEL L.H. WALL / W/SLIDE OUT From 3-8109 To 3-8164			1		A
	351409	KIT INSULATING PANEL L.H. WALL / W/SLIDE OUT From 4-8165			1		A
	351140	KIT INSULATING PANEL R.H. WALL To 3-8164			1		
	351465	KIT INSULATING PANEL R.H. WALL From 4-8165			1		
	351141	KIT INSULATING PANEL L.H. WALL To 3-8164		1			
	351475	KIT INSULATING PANEL L.H. WALL From 4-8165 To 5-8813		1			
	351142	KIT INSULATING PANEL R.H. WALL To 3-8164		1			
	351476	KIT INSULATING PANEL R.H. WALL From 4-8165 To 5-8813		1			
	351105	KIT INSULTING R.H. PANEL 89" HEIGHT To 3-8164				1	
	351478	KIT INSULTING R.H. PANEL 89" HEIGHT From 4-8165 To 6-8805				1	
	351582	KIT INSULTING R.H. PANEL 89" HEIGHT From 6-8806				1	
	351106	KIT INSULTING L.H. PANEL 89" HEIGHT To 3-8164				1	
	351477	KIT INSULTING L.H. PANEL 89" HEIGHT From 4-8165 To 6-8805				1	
	351581	KIT INSULTING L.H. PANEL 89" HEIGHT From 6-8806				1	
	351547	KIT INSULTING L.H. PANEL 89" / W/SLIDE OUT From 6-8806				1	
101	351143	SIDE INSULATION PANEL To 5-8813		1			
101	351143	SIDE INSULATION PANEL			2		
102	351144	SIDE INSULATION PANEL To 5-8813		1			
102	351144	SIDE INSULATION PANEL			2		
103	351145	SIDE INSULATION PANEL To 5-8813		1			
103	351145	SIDE INSULATION PANEL			2		
104	350943	SIDE INSULATION PANEL		1	1	1	
105	350944	SIDE INSULATION PANEL		1	1	1	
106	350945	SIDE INSULATION PANEL		1	1	1	
107	351146	SIDE INSULATION PANEL To 5-8813		1			
107	351146	SIDE INSULATION PANEL			2		
107	350946	SIDE INSULATION PANEL				2	
108	351147	SIDE INSULATION PANEL			2		
108	350947	SIDE INSULATION PANEL				2	
109	351148	SIDE INSULATION PANEL			2		
109	350948	SIDE INSULATION PANEL				2	
110	351149	SIDE INSULATION PANEL			2		
111	351150	SIDE INSULATION PANEL			2		
112	351151	SIDE INSULATION PANEL To 5-8813		1			
112	351151	SIDE INSULATION PANEL			2		
113	351152	SIDE INSULATION PANEL To 5-8813		1			
113	351152	SIDE INSULATION PANEL			2		

From 2-7703 To 8-9339		Date:07/2024	PAGE:Y2-1839-51

INSULATING SIDE WALL - LOWER PANEL - MTH

Item#	Part	Description	XLII 45	XLII MTH40	XLII MTH45	XLII MTH45E	NOTES
114	351153	SIDE INSULATION PANEL To 5-8813		1			
114	351153	SIDE INSULATION PANEL			2		
115	351154	SIDE INSULATION PANEL To 5-8813		1			
115	351154	SIDE INSULATION PANEL			2		
116	351155	SIDE INSULATION PANEL		2	2		
117	351156	SIDE INSULATION PANEL		1	1		
118	351157	SIDE INSULATION PANEL To 5-8813		1			
118	351157	SIDE INSULATION PANEL			2		
119	351158	SIDE INSULATION PANEL To 5-8813		1			
119	351158	SIDE INSULATION PANEL			2		
120	351159	SIDE INSULATION PANEL To 5-8813		1			
120	351159	SIDE INSULATION PANEL			2		
121	351160	SIDE INSULATION PANEL To 5-8813		1			
121	351160	SIDE INSULATION PANEL			2		
122	351161	SIDE INSULATION PANEL			2		
123	351162	SIDE INSULATION PANEL			2		
124	351163	SIDE INSULATION PANEL			2		
125	351164	SIDE INSULATION PANEL			2		
126	351165	SIDE INSULATION PANEL			1		
127	351166	SIDE INSULATION PANEL			1		
128	351167	SIDE INSULATION PANEL			1		
129	351168	SIDE INSULATION PANEL			1		
130	351169	SIDE INSULATION PANEL			2		
131	351170	SIDE INSULATION PANEL			2		
132	351171	SIDE INSULATION PANEL			2		
133	351172	SIDE INSULATION PANEL			1		
134	351173	SIDE INSULATION PANEL			1		
135	351174	SIDE INSULATION PANEL			1		
136	351175	SIDE INSULATION PANEL			1		
137	351176	SIDE INSULATION PANEL To 5-8813		1			
138	351177	SIDE INSULATION PANEL To 5-8813		1			
139	351178	SIDE INSULATION PANEL To 5-8813		1			
140	351179	SIDE INSULATION PANEL To 5-8813		1			
141	351180	SIDE INSULATION PANEL To 5-8813		1			
142	351181	SIDE INSULATION PANEL To 5-8813		1			
143	351182	SIDE INSULATION PANEL To 5-8813		1			
144	351183	SIDE INSULATION PANEL To 5-8813		1			
145	351184	SIDE INSULATION PANEL To 5-8813		1			
146	351185	SIDE INSULATION PANEL To 5-8813		1			
147	351186	SIDE INSULATION PANEL To 5-8813		1			
148	351187	SIDE INSULATION PANEL To 5-8813		1			
149	351188	SIDE INSULATION PANEL To 5-8813		1			

From 2-7703 To 8-9339		Date:07/2024	PAGE:Y2-1839-51

INSULATING SIDE WALL - LOWER PANEL - MTH

Item#	Part	Description	XLII 45	XLII MTH40	XLII MTH45	XLII MTH45E	NOTES
150	351189	SIDE INSULATION PANEL To 5-8813		1			
151	351190	SIDE INSULATION PANEL To 5-8813		1			
152	351191	SIDE INSULATION PANEL To 5-8813		1			
153	351192	SIDE INSULATION PANEL To 5-8813		1			
154	351193	SIDE INSULATION PANEL To 5-8813		1			
155	351194	SIDE INSULATION PANEL To 5-8813		2			
156	351195	SIDE INSULATION PANEL To 5-8813		1			
157	351196	SIDE INSULATION PANEL To 5-8813		1			
158	351197	SIDE INSULATION PANEL To 5-8813		1			
159	351198	SIDE INSULATION PANEL To 5-8813		1			
160	351199	SIDE INSULATION PANEL To 5-8813		1			
161	351200	SIDE INSULATION PANEL To 5-8813		1			
162	351201	SIDE INSULATION PANEL To 5-8813		1			
163	351202	SIDE INSULATION PANEL To 5-8813		1			
164	351203	SIDE INSULATION PANEL To 5-8813		1			
165	351204	SIDE INSULATION PANEL To 5-8813		1			
166	351205	SIDE INSULATION PANEL To 5-8813		1			
167	351206	SIDE INSULATION PANEL To 5-8813		1			
168	351207	SIDE INSULATION PANEL To 5-8813		1			
169	351208	SIDE INSULATION PANEL To 5-8813		1			
170	351209	SIDE INSULATION PANEL To 5-8813		1			
171	351210	SIDE INSULATION PANEL To 5-8813		1			
301	351063	SIDE INSULATION PANEL				2	
302	351064	SIDE INSULATION PANEL				2	
303	351065	SIDE INSULATION PANEL				2	
304	351066	SIDE INSULATION PANEL				1	
305	351067	SIDE INSULATION PANEL				1	
306	351068	SIDE INSULATION PANEL				1	
307	351069	SIDE INSULATION PANEL				1	
308	351070	SIDE INSULATION PANEL				1	
309	351071	SIDE INSULATION PANEL				1	
310	351072	SIDE INSULATION PANEL				1	
311	351073	SIDE INSULATION PANEL				1	
312	351074	SIDE INSULATION PANEL				1	
313	351075	SIDE INSULATION PANEL				1	
314	351076	SIDE INSULATION PANEL				1	
315	351077	SIDE INSULATION PANEL				1	
316	351078	SIDE INSULATION PANEL				1	
317	351079	SIDE INSULATION PANEL				1	
318	351080	SIDE INSULATION PANEL				1	
319	351081	SIDE INSULATION PANEL				1	
320	351082	SIDE INSULATION PANEL				1	

From 2-7703 To 8-9339		Date:07/2024	PAGE:Y2-1839-51

INSULATING SIDE WALL - LOWER PANEL - MTH

Item#	Part	Description	XLII 45	XLII MTH40	XLII MTH45	XLII MTH45E	NOTES
321	351083	SIDE INSULATION PANEL				1	
322	351084	SIDE INSULATION PANEL				2	
323	351085	SIDE INSULATION PANEL				2	
324	351086	SIDE INSULATION PANEL				2	
325	351087	SIDE INSULATION PANEL				1	
326	351088	SIDE INSULATION PANEL				1	
327	351089	SIDE INSULATION PANEL				1	
328	351090	SIDE INSULATION PANEL				1	
329	351091	SIDE INSULATION PANEL				1	
330	351092	SIDE INSULATION PANEL				1	
331	351093	SIDE INSULATION PANEL				1	
332	351094	SIDE INSULATION PANEL				1	
333	351095	SIDE INSULATION PANEL				1	
334	351096	SIDE INSULATION PANEL				1	
335	351097	SIDE INSULATION PANEL				1	
336	351098	SIDE INSULATION PANEL				1	
337	351099	SIDE INSULATION PANEL				1	
338	351100	SIDE INSULATION PANEL				1	
339	351101	SIDE INSULATION PANEL				1	
340	351102	SIDE INSULATION PANEL				1	
341	351103	SIDE INSULATION PANEL				1	
342	351104	SIDE INSULATION PANEL				1	
432	Call order desk	SIDE INSULATION PANEL From 4-8165			1		P
433	351340	SIDE INSULATION PANEL From 4-8165			1		
434	351341	SIDE INSULATION PANEL From 4-8165			1		
435	351342	SIDE INSULATION PANEL From 4-8165			1		
436	351343	SIDE INSULATION PANEL From 4-8165			1		
437	351344	SIDE INSULATION PANEL From 4-8165			1		
500	351388	SIDE INSULATION PANEL			1		
501	351387	SIDE INSULATION PANEL			1		
502	351389	SIDE INSULATION PANEL			1		
503	351390	SIDE INSULATION PANEL			1		
504	351391	SIDE INSULATION PANEL			1		
505	351392	SIDE INSULATION PANEL			1		
506	351393	SIDE INSULATION PANEL			1		
507	351394	SIDE INSULATION PANEL			1		
508	351395	SIDE INSULATION PANEL			1		
509	351396	SIDE INSULATION PANEL			1		
510	351397	SIDE INSULATION PANEL			1		
511	351398	SIDE INSULATION PANEL			1		
512	351399	SIDE INSULATION PANEL			1		
513	351400	SIDE INSULATION PANEL			1		

From 2-7703 To 8-9339		Date:07/2024	PAGE:Y2-1839-51

INSULATING SIDE WALL - LOWER PANEL - MTH

Item#	Part	Description	XLII 45	XLII MTH40	XLII MTH45	XLII MTH45E	NOTES
514	351401	SIDE INSULATION PANEL			1		
515	351402	SIDE INSULATION PANEL			1		
516	351403	SIDE INSULATION PANEL			1		
517	351404	SIDE INSULATION PANEL			1		
518	351405	SIDE INSULATION PANEL			1		
519	351406	SIDE INSULATION PANEL			1		
520	351407	SIDE INSULATION PANEL			1		
521	351408	SIDE INSULATION PANEL			1		
NS	850065	ALUMINUM WALL COVERING ADHESIVE / 32 1/4" X 455"			2		
523	850066	ALUMINUM WALL COVERING ADHESIVE / 32 1/4" X 415"		2			
524	850070	ALUMINUM WALL COVERING ADHESIVE / 36" X 438"				2	
525	850080	ALUMINUM WALL COVERING ADHESIVE / 32 1/4" X 300"				2	
526	850081	ALUMINUM WALL COVERING ADHESIVE / 36" X 300"				2	
		A) WITH FRONT SLIDE OUT					
		B) WITH DOUBLE SLIDE OUT					
		P) CALL ORDER DESK FOR SPECIFIC APPLICATION (V.I.N.)					

From Y-7046 To 8-9339		Date:07/2024	PAGE:Y2-1839-55
INSULATING FRONT - MTH			

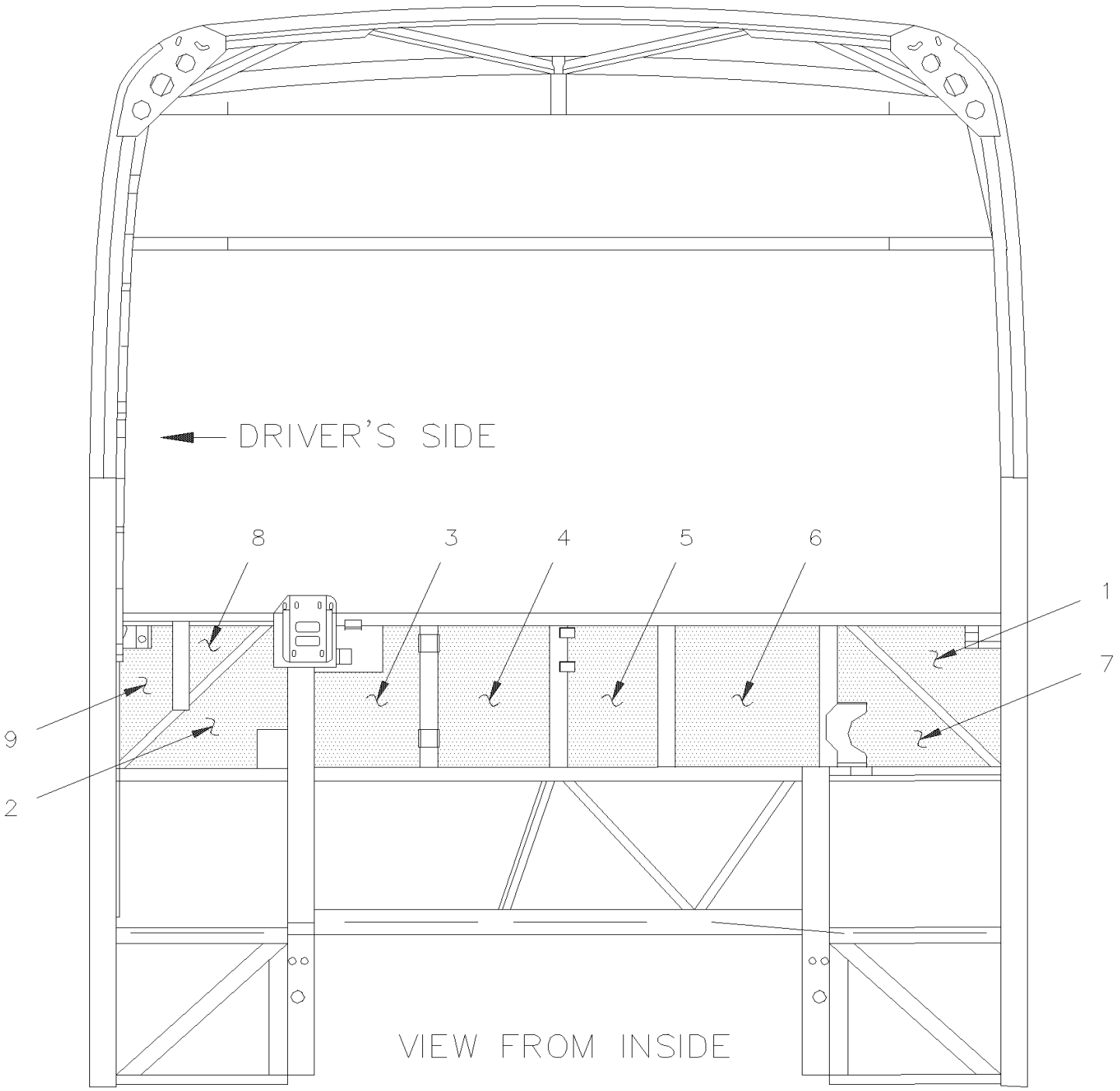

MTH

From Y-7046 To 8-9339		Date:07/2024	PAGE:Y2-1839-55

INSULATING FRONT - MTH

Item#	Part	Description	XLII 45	XLII MTH40	XLII MTH45	XLII MTH45E	NOTES
1	350828	INSULATING PANEL MTH 83" To Y-7128		1	1		
1	350962	INSULATING PANEL MTH 86"		1	1	1	
1	351050	INSULATING PANEL MTH 89"				1	
2	350829	INSULATING PANEL MTH 83" To Y-7128		1	1		
2	350963	INSULATING PANEL MTH 86"		1	1	1	
2	351051	INSULATING PANEL MTH 89"				1	
3	350830	INSULATING PANEL MTH 83" To Y-7128		1	1		
3	350964	INSULATING PANEL MTH 86"		1	1	1	
3	351052	INSULATING PANEL MTH 89"				1	
4	350831	INSULATING PANEL MTH 83" To Y-7128		1	1		
4	350965	INSULATING PANEL MTH 86"		1	1	1	
4	351053	INSULATING PANEL MTH 89"				1	
5	350832	INSULATING PANEL MTH 83" To Y-7128		1	1		
5	350966	INSULATING PANEL MTH 86"		1	1	1	
5	351054	INSULATING PANEL MTH 89"				1	
6	350833	INSULATING PANEL MTH 83" To Y-7128		1	1		
6	350967	INSULATING PANEL MTH 86"		1	1	1	
6	351055	INSULATING PANEL MTH 89"				1	
7	350834	INSULATING PANEL MTH 83" To Y-7128		1	1		
7	350968	INSULATING PANEL MTH 86"		1	1	1	
7	351056	INSULATING PANEL MTH 89"				1	
8	350925	INSULATING PANEL MTH 83" To Y-7128		1	1		
8	350969	INSULATING PANEL MTH 86"		1	1	1	
8	351058	INSULATING PANEL MTH 89"				1	
9	350926	INSULATING PANEL MTH 83" To Y-7128		1	1		
9	350970	INSULATING PANEL MTH 86"		1	1	1	
9	351057	INSULATING PANEL MTH 89"				1	
NS	680397	CONTACT GLUE / AEROSOL 17oz		AR	AR	AR	
9	850032	INSULATION PAD NOISE 1" x 48" x 35' / ARMAFLEX POLYURETHANE FOAM		AR	AR	AR	

From Y-7046 To 8-9339		Date:07/2024	PAGE:Y2-1839-60

INSULATING SIDE WALL - UPPER

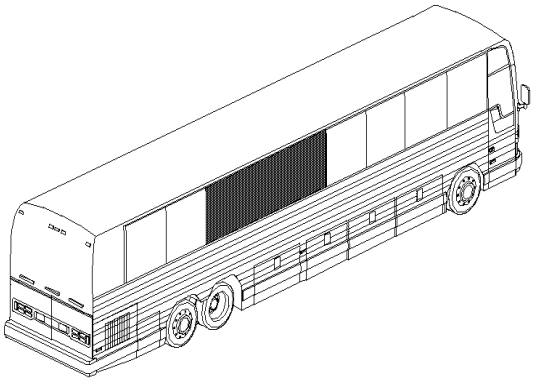

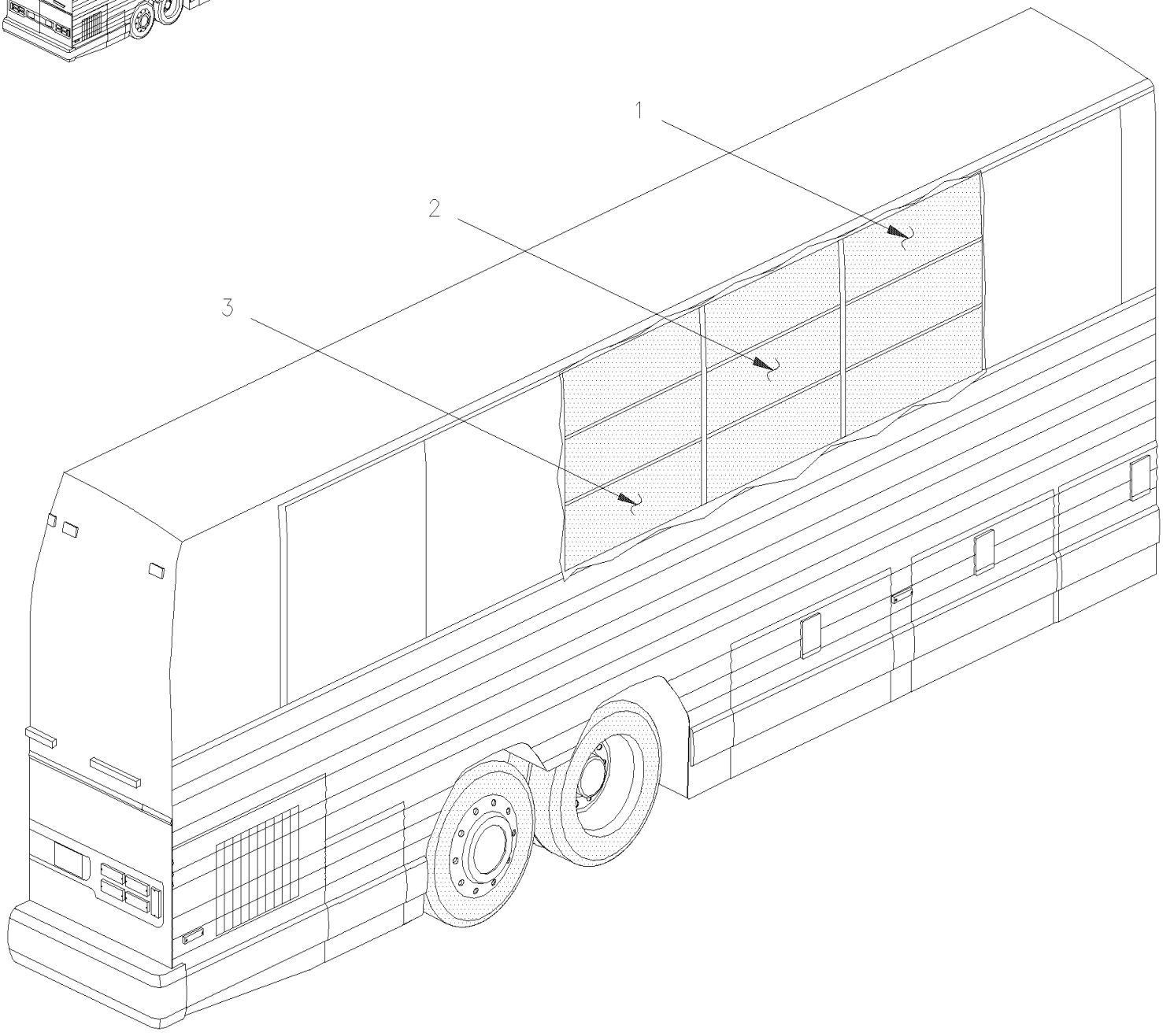

From Y-7046 To 8-9339		Date:07/2024	PAGE:Y2-1839-60

INSULATING SIDE WALL - UPPER

Item#	Part	Description	XLII 45	XLII MTH40	XLII MTH45	XLII MTH45E	NOTES
1	350675	SIDE INSULATION PANEL / MTH 83" To Y-7128			8		
1	350675	SIDE INSULATION PANEL / MTH 83" To Y-7128		6			
1	350680	SIDE INSULATION PANEL / MTH 86" To 5-8813		6			
1	350680	SIDE INSULATION PANEL / MTH 86"			8	8	
1	350681	SIDE INSULATION PANEL / MTH 89"			8	8	
2	350676	SIDE INSULATION PANEL			8	8	
2	350676	SIDE INSULATION PANEL To 5-8813		6			
3	350678	SIDE INSULATOR PANEL 427MM / MTH 83" & 86"			8	8	
3	350678	SIDE INSULATOR PANEL 427MM / MTH 83" & 86" To 5-8813		6			
3	350679	SIDE INSULATOR PANEL 351MM / MTH 89"				8	
NS	680532	SEALANT SIKA #221 / GREY / 310ml CARTRIDGE		AR	AR	AR	

From Y-7046 To 7-9095		Date:07/2024	PAGE:Y2-1839-70
INSULATING REAR END INSIDE OVER ENGINE			

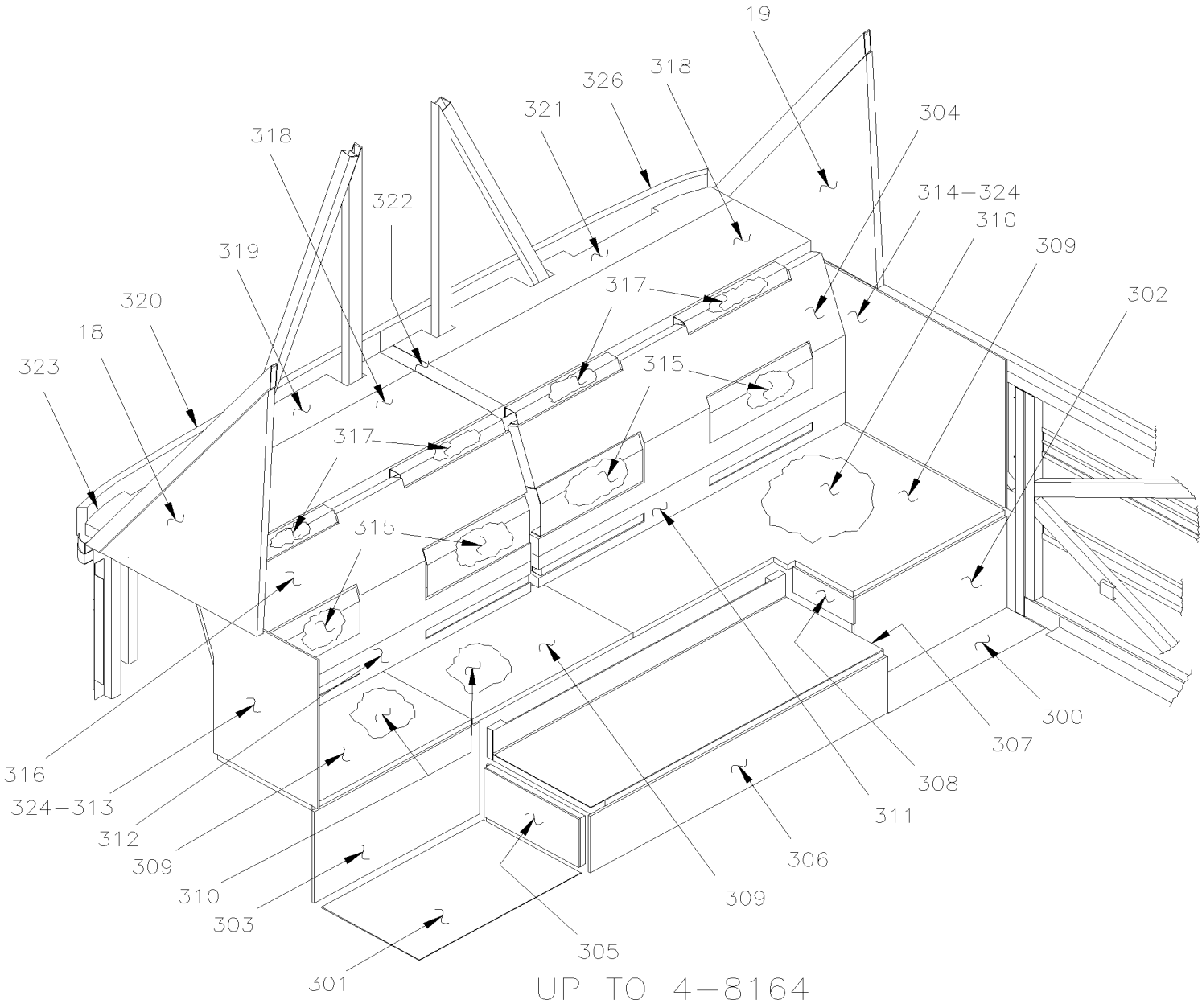

From Y-7046 To 7-9095		Date:07/2024	PAGE:Y2-1839-70
INSULATING REAR END INSIDE OVER ENGINE			

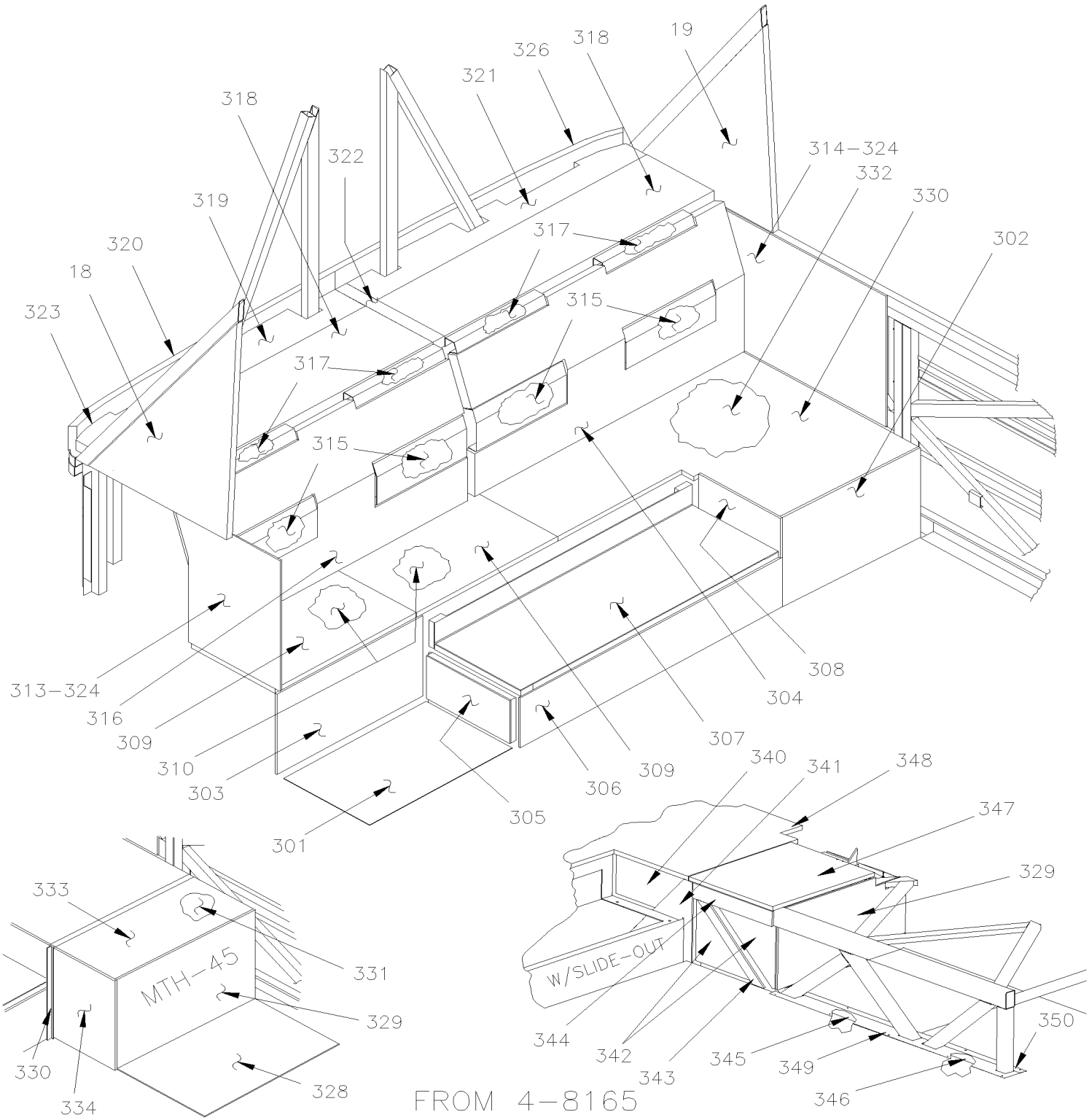

From Y-7046 To 7-9095		Date:07/2024	PAGE:Y2-1839-70

INSULATING REAR END INSIDE OVER ENGINE

Item#	Part	Description	XLII 45	XLII MTH40	XLII MTH45	XLII MTH45E	NOTES
18	326667	INSULATING				1	
18	327036	INSULATING		1	1		83
19	326668	INSULATING				1	
19	327037	INSULATING		1	1		83
300	323984	INSULATING To 3-8164		1	1	1	
301	324421	INSULATING To 3-8164		1	1	1	
302	325423	INSULATING To 3-8164		1		1	
302	327906	INSULATING From 4-8165		1		1	A
302	327835	INSULATING From 4-8165		1		1	
302	325410	INSULATING To 3-8164			1		
303	327344	INSULATING		1		1	
303	325425	INSULATING		1		1	A
303	325415	INSULATING To 3-8164			1		
303	327857	INSULATING From 4-8165			1		
303	325416	INSULATING To 3-8164			1		A
303	327858	INSULATING From 4-8165			1		A
304	325406	INSULATING		1		1	
304	325406	INSULATING To 3-8164			1		
304	327884	INSULATING From 4-8165			1		
305	325414	INSULATING To 3-8164		1		1	
305	325414	INSULATING From 4-8165 To 5-8805			1		
305	327856	INSULATING From 5-8806			1		
306	325413	INSULATING To 3-8164		1	1	1	
306	327831	INSULATING From 4-8165		1		1	
306	327819	INSULATING From 4-8165			1		
307	325411	INSUALTING To 3-8164		1	1	1	
307	327854	INSULATING From 4-8165			1		
308	325424	INSULATING To 3-8164		1		1	
308	327834	INSULATING From 4-8165		1		1	
308	325412	INSUALTING To 3-8164			1		
308	327839	INSULATING From 4-8165			1		
309	325120	INSULATING KIT To 3-8164		1		1	
309	325120	INSULATING KIT To 3-8164			1		
309	327837	INSULATING KIT From 4-8165		1		1	
310	324409	INSULATING		1	1	1	
310	327836	INSUALTING From 4-8165		1		1	
310	325047	INSULATING			1		
311	325420	INSULATING		1	1	1	
312	325422	INSULATING		1	1	1	
313	324080	INSUALTING		1	1		83
313	324688	INSUALTING		1	1	1	
314	324081	INSUALTING		1	1		83

From Y-7046 To 7-9095		Date:07/2024	PAGE:Y2-1839-70

INSULATING REAR END INSIDE OVER ENGINE

Item#	Part	Description	XLII 45	XLII MTH40	XLII MTH45	XLII MTH45E	NOTES
314	324703	INSULATING		1	1	1	
315	324958	INSULATING		4	4	4	
316	325408	INSULATING		1		1	
316	325408	INSULATING To 3-8164			1		
316	327885	INSULATING From 4-8165			1		
317	324959	INSULATING		4	4	4	
318	325417	INSULATING		2	2		83
318	325418	INSULATING				2	
319	326708	INSULATING		1	1		83
319	327165	INSULATING		1	1	1	
319	328913	INSULATING				1	89
320	326820	INSULATING		1	1		
320	327166	INSULATING		1	1	1	
321	326709	INSULATING		1	1		83
321	327164	INSULATING		1	1	1	
321	328914	INSULATING				1	89
322	326715	INSULATING		1	1	1	
322	328915	INSULATING				1	89
323	682484	TAPE ALUMINUM ADH1 .005" x 3" x 300' ALUMINUM FSK3"		AR	AR	AR	
324	680397	CONTACT GLUE / AEROSOL 17oz		1	1	1	
326	326821	INSULATING PANEL		1	1		83
326	327167	INSULATING		1	1	1	
328	327976	INSULATING From 4-8165			1		A
328	328745	INSULATING From 4-8165 To 5-8805			1		
328	328014	INSULATING From 5-8806			1		
329	327860	INSULATING From 4-8165 To 5-8805			1		A
329	328290	INSULATING From 5-8806			1		A
329	327859	INSULATING From 4-8165 To 5-8805			1		
329	329087	INSULATING From 5-8806			1		
330	327875	INSULATING KIT From 4-8165 To 5-8805			1		
330	327964	INSULATING KIT From 4-8165			1		
330	328017	INSULATING KIT From 4-8165 To 5-8805			1		S
330	328185	INSULATING KIT From 5-8806			1		S
331	327873	INSULATING From 4-8165 To 5-8805			1		
331	328189	INSULATING From 5-8806			1		
331	327965	INSULATING From 4-8165 To 5-8805			1		S
332	327874	INSULATING From 4-8165 To 5-8805			1		
332	328192	INSULATING From 5-8806			1		
332	328190	INSULATING From 5-8806			1		S
333	327884	INSULATING From 4-8165			1		
334	327855	INSULATING From 4-8165 To 5-8805			1		

From Y-7046 To 7-9095		Date:07/2024	PAGE:Y2-1839-70

INSULATING REAR END INSIDE OVER ENGINE

Item#	Part	Description	XLII 45	XLII MTH40	XLII MTH45	XLII MTH45E	NOTES
340	327968	INSULATING From 4-8165			1		
341	327969	INSULATING From 4-8165			1		
342	327970	INSULATING From 4-8165			2		
343	327972	INSULATING From 4-8165			1		
344	327971	INSULATING From 4-8165			1		
345	328021	INSULATING From 4-8165			1		
346	328020	INSULATING From 4-8165			1		
347	327967	FLOOR PANEL ASSY / FORWARD From 4-8165 To 5-8805			1		
NS	328187	FLOOR PANEL ASSY / FORWARD From 5-8806			1		
348	328015	FLOOR PANEL ASSY / BACKWARD From 4-8165			1		
349	328022	PLATE FINISHING From 4-8165			1		
350	328023	PLATE FINISHING From 4-8165			1		
350	500434	SCREW TP FL PH #8x3/4 Z050 From 4-8165			AR		
		83) MTH 83" ONLY					
		89) MTH 89" ONLY					
		A) W/SMALL A/C					
		S) WITH REAR SLIDE OUT					

From 7-9096 To 8-9339		Date:07/2024	PAGE:Y2-1839-71
INSULATING REAR END INSIDE OVER ENGINE			

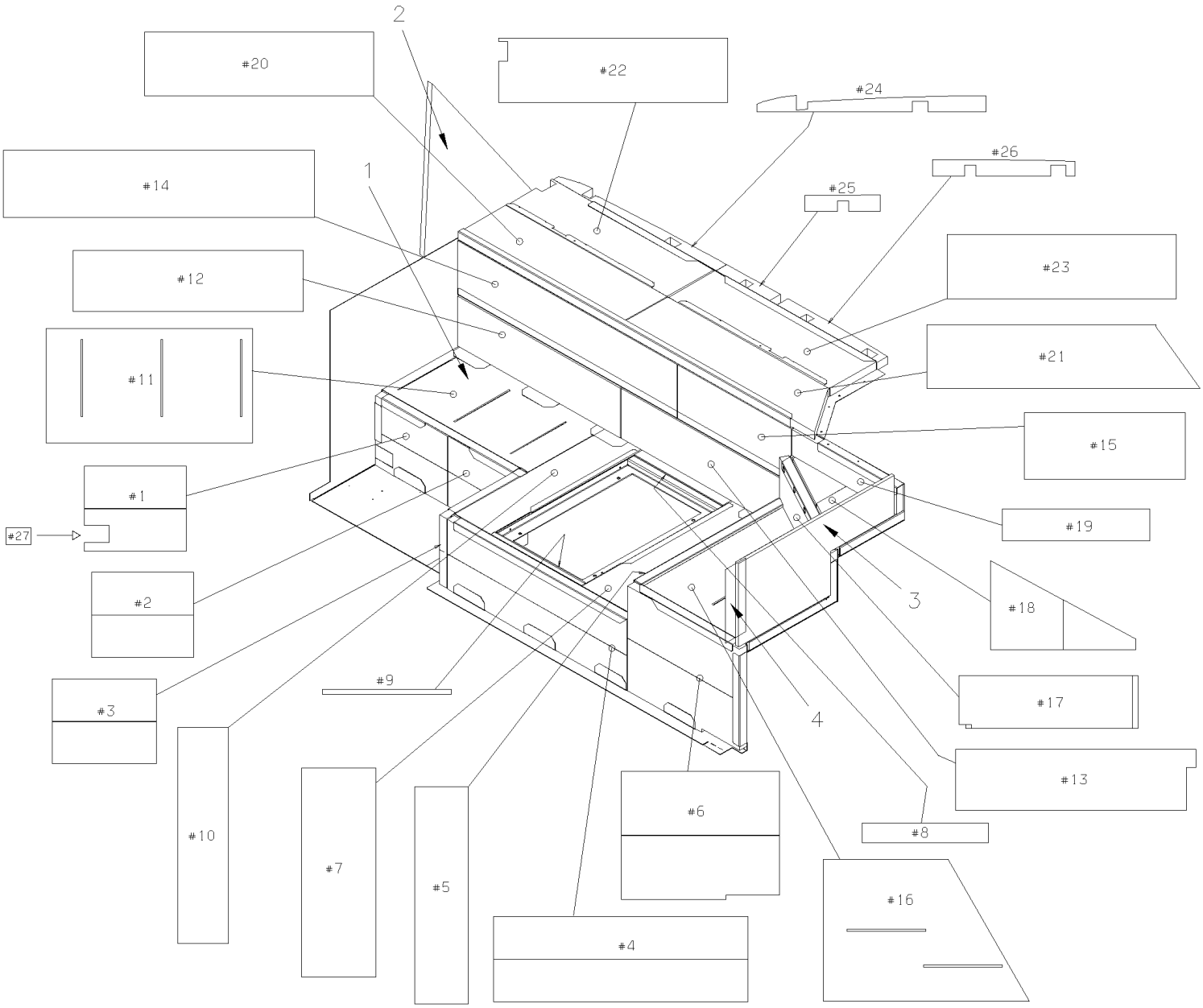

MTH–40' & MTH–45' ENT

From 7-9096 To 8-9339		Date:07/2024	PAGE:Y2-1839-71
INSULATING REAR END INSIDE OVER ENGINE			

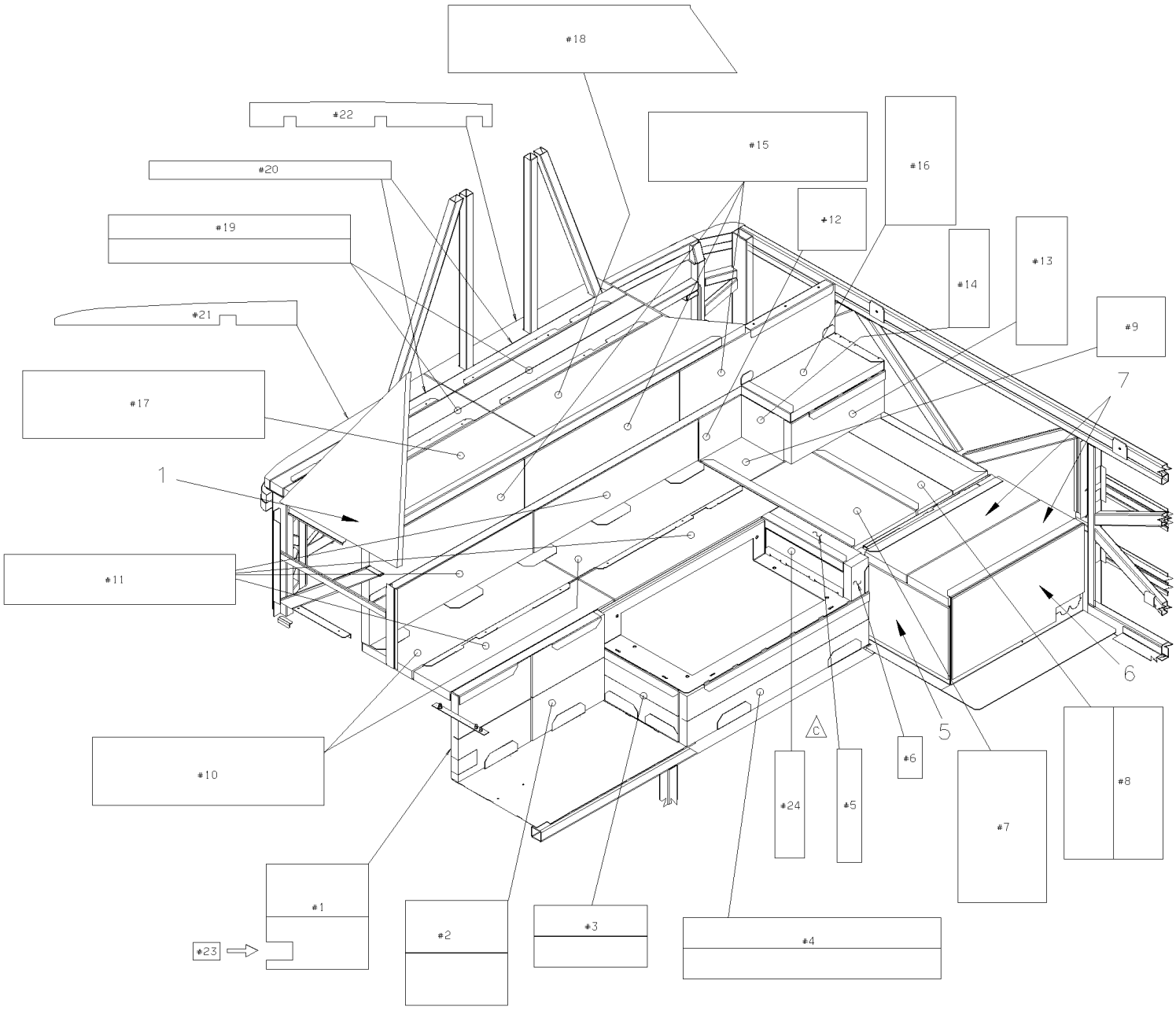

MTH-45'

From 7-9096 To 8-9339		Date:07/2024	PAGE:Y2-1839-71
INSULATING REAR END INSIDE OVER ENGINE			

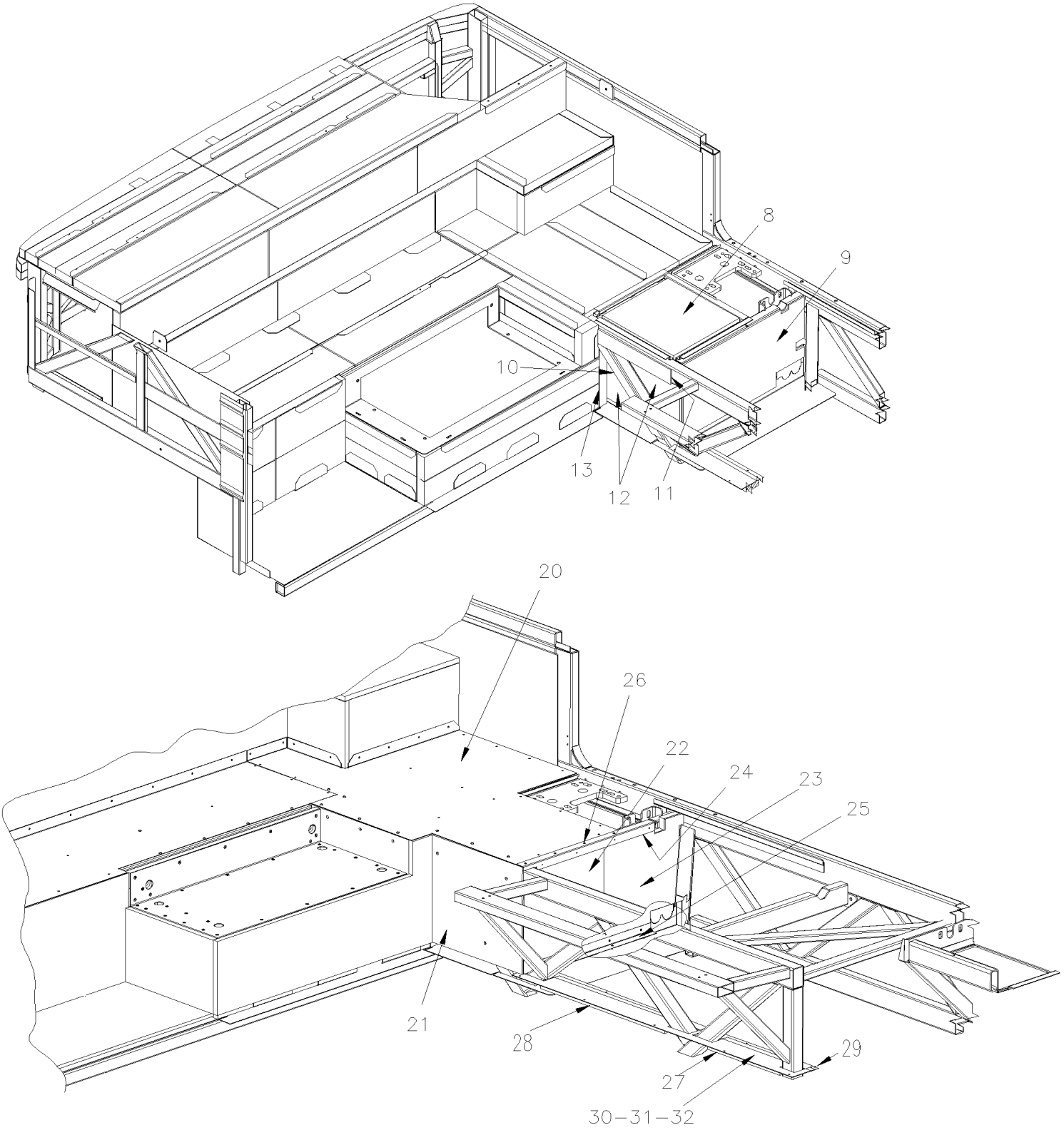

MTH–45' WITH SLIDE–OUT

From 7-9096 To 8-9339		Date:07/2024	PAGE:Y2-1839-71

INSULATING REAR END INSIDE OVER ENGINE

Item#	Part	Description	XLII 45	XLII MTH40	XLII MTH45	XLII MTH45E	NOTES
1	328698	KIT REAR END INSULATING			1		
1	328662	KIT REAR END INSULATING				1	
2	326667	INSULATING				1	
2	327036	INSULATING			1		
3	328451	INSULATING STREETSIDE				1	
4	682484	TAPE ALUMINUM ADH1 .005" x 3" x 300' ALUMINUM FSK3"			AR	AR	
5	327839	INSULATING			1		
6	328707	INSULATING / W/SMALL A/C			1		
6	328711	INSULATING / W/LARGE A/C			1		
7	328704	INSULATING			2		
8	328705	INSULATING / W/SLIDE OUT			1		
9	328290	INSULATING			1		
9	329087	INSULATING			1		
10	328721	INSULATING			1		
11	328720	INSULATING			1		
12	327970	INSULATING			2		
13	328722	INSULATING			1		
20	328694	ALLUMINUM PANEL To 8-9330			1		
20	320259	ALLUMINUM PANEL From 8-9331			1		
NS	320260	INSULATING 360MNM X 250MM From 8-9331			1		
20	320261	INSULATING 250MM X 250MM From 8-9331			1		
21	328714	INSULATING			1		
22	328715	INSULATING			1		
23	328716	INSULATING / W/LARGE A/C			1		
23	328723	INSULATING / W/SMALL A/C			1		
24	328727	ANGLE RETAINER			1		
25	328729	ANGLE RETAINER / W/LARGE A/C			1		
25	328728	ANGLE RETAINER / W/SMALL A/C			1		
26	500613	SCREW TP PAN PH #10x1/2 Z050			AR		
27	328020	INSULATING			1		
28	328021	INSULATING			1		
29	328023	PLATE FINISHING			1		
30	328022	PLATE FINISHING			1		

		Date:07/2024	PAGE:Y2-1839-90
INSULATING - "SLIDE-OUT"			

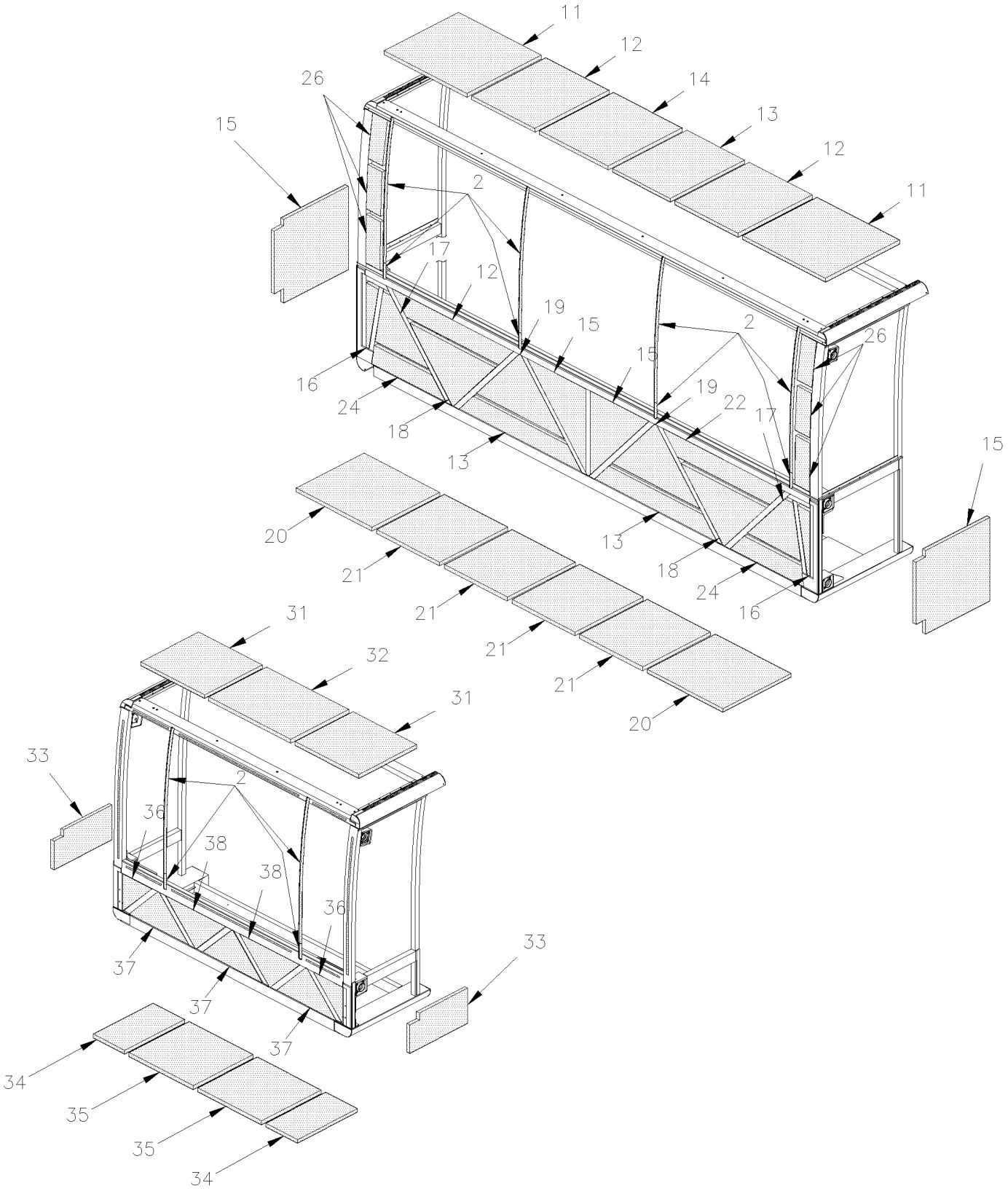

		Date:07/2024	PAGE:Y2-1839-90

INSULATING - "SLIDE-OUT"

Item#	Part	Description	XLII 45	XLII MTH40	XLII MTH45	XLII MTH45E	NOTES
	690203	FRONT S/O INSULATION KIT To 4-8251			1		A
	351426	FRONT S/O INSULATION KIT From 4-8252			1		
1	690204	REAR S/O INSULATION KIT To 4-8251			1		B
1	351443	REAR S/O INSULATION KIT From 4-8252			1		
		A) INCLUDES ITEMS #2 TO 26					
		B) INCLUDES ITEMS #2 & 30 TO 38					

		Date:07/2024	PAGE:Y2-18-EXT
BODY EXTERIOR			

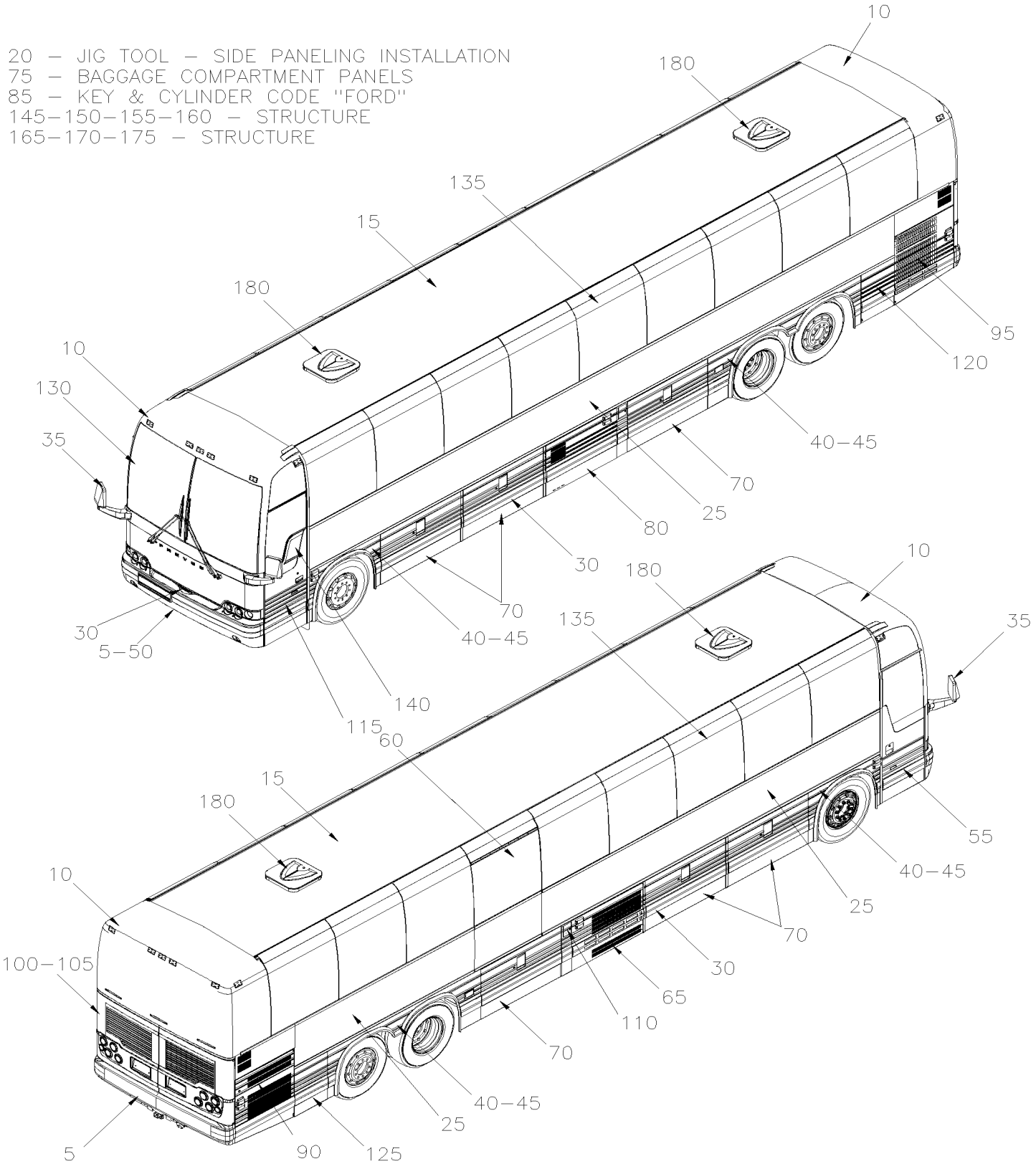

		Date:07/2024	PAGE:Y2-18-EXT

BODY EXTERIOR

Item#	Part	Description	XLII 45	XLII MTH40	XLII MTH45	XLII MTH45E	NOTES
5	Y2-1850-00	BUMPER FRONT From Y-7046 To 2-7764					
5	Y2-1850-01	BUMPER FRONT From 2-7765 To 4-8358					
5	Y2-1850-02	BUMPER FRONT From 4-8359 To 8-9339					
5	Y2-1850-10	BUMPER REAR From Y-7046 To 8-9339					
5	Y2-1850-15	BUMPER REAR - BUS "OPTION" / "ROMEO RIM" From Y-7046 To 6-8906					
10	Y2-1851-00	FRONT CAP - INSTALLATION From Y-7046 To 8-9339					
10	Y2-1851-20	REAR CAP - INSTALLATION From Y-7046 To 8-9339					
15	Y2-1852-00	ROOF PANEL From Y-7046 To 8-9339					
20	Y2-1853-50	JIG TOOL - SIDE PANELING INSTALLATION From Y-7046 To 8-9339					
25	Y2-1854-00	SIDE PANELS - BUS From Y-7046 To 6-8906					
25	Y2-1854-10	WEATHERSTRIP & RETAINER - BUS From Y-7046 To 6-8906					
25	Y2-1854-20	WEATHERSTRIP & RETAINER - MTH From Y-7046 To 8-9339					
25	Y2-1854-50	SIDE PANELS - MTH From Y-7046 To 8-9339					
25	Y2-1854-51	SIDE FLAT PANEL - MTH ENTERTAINER From 1-7436 To 8-9339					
25	Y2-1854-90	SIDE PANELS - "SLIDE-OUT" From Y-7046 To 6-8805					
25	Y2-1854-91	SIDE PANELS - "SLIDE-OUT" From 6-8806 To 8-9339					
30	Y2-1855-00	RUB RAIL - EXTERIOR CREST & TRIMS From Y-7046 To 8-9339					
35	Y2-1856-20	MIRROR "RAMCO" FLAT GLASS / SILVER PAINTED From Y-7046 To 2-7763					
35	Y2-1856-21	MIRROR "RAMCO" FLAT GLASS / SILVER PAINTED From 2-7764 To 6-8906					
35	Y2-1856-22	MIRROR "RAMCO" FLAT GLASS / BLACK PAINTED From Y-7046 To 2-7763					
35	Y2-1856-23	MIRROR "RAMCO" FLAT GLASS / BLACK PAINTED From 2-7764 To 6-8906					
35	Y2-1856-30	MIRROR "RAMCO" 2 GLASSES / SILVER PAINTED From Y-7046 To 2-7763					
35	Y2-1856-31	MIRROR "RAMCO" 2 GLASSES / SILVER PAINTED From 2-7764 To 6-8906					
35	Y2-1856-32	MIRROR "RAMCO" 2 GLASSES / BLACK PAINTED From Y-7046 To 2-7763					
35	Y2-1856-33	MIRROR "RAMCO" 2 GLASSES / BLACK PAINTED From 2-7764 To 6-8906					
35	Y2-1856-50	MIRROR "RAMCO" FLAT GLASS / CHROME From Y-7046 To 2-7763					
35	Y2-1856-51	MIRROR "RAMCO" FLAT GLASS / CHROME From 2-7764 To 8-9339					
35	Y2-1856-60	MIRROR "RAMCO" 2 GLASSES / CHROME From Y-7046 To 2-7763					
35	Y2-1856-61	MIRROR "RAMCO" 2 GLASSES / CHROME From 2-7764 To 8-9339					
40	Y2-1857-00	FENDERS L.H. - BUS W/FLAT PANELING From Y-7046 To 6-8906					
40	Y2-1857-05	FENDERS R.H. - BUS W/FLAT PANELING From Y-7046 To 6-8906					
40	Y2-1857-10	FENDERS L.H. - BUS W/FLUTED PANELLING From Y-7046 To 6-8906					
40	Y2-1857-15	FENDERS R.H. - BUS W/FLUTED PANELLING From Y-7046 To 8-9339					
40	Y2-1857-50	FENDERS L.H. - MTH From Y-7046 To 8-9339					
40	Y2-1857-51	FENDERS L.H. - MTH 45 ENT From 7-9096 To 8-9278					
40	Y2-1857-55	FENDERS R.H. - MTH From Y-7046 To 8-9339					
40	Y2-1857-56	FENDERS R.H. - MTH 45 ENT From 7-9096 To 8-9278					
45	Y2-1859-00	SPLASH GUARD - FRONT & REAR From Y-7046 To 8-9339					
50	Y2-1860-10	SPARE WHEEL DOOR ASSY From Y-7046 To 2-7764					
50	Y2-1860-11	SPARE WHEEL DOOR ASSY From 2-7765 To 8-9339					
55	Y2-1862-00	ENTRANCE DOOR ASSY - BUS From Y-7046 To 6-8906					
55	Y2-1862-50	ENTRANCE DOOR ASSY - MTH From Y-7046 To 8-9339					

		Date:07/2024	PAGE:Y2-18-EXT

BODY EXTERIOR

Item#	Part	Description	XLII 45	XLII MTH40	XLII MTH45	XLII MTH45E	NOTES
55	Y2-1862-60	ENTRANCE DOOR FRAME - INSTALLATION From Y-7046 To 8-9339					
60	Y2-1862-80	ENTRANCE DOOR ASSY - W.C.L. From Y-7046 To 6-8906					
60	Y2-1862-82	ENTRANCE DOOR - INSTALLATION - W.C.L. From Y-7046 To 6-8906					
65	Y2-1863-00	CONDENSOR DOOR ASSY - BUS From Y-7046 To 6-8906					
65	Y2-1863-50	CONDENSOR DOOR ASSY From Y-7046 To 8-9339					
65	Y2-1863-51	CONDENSOR DOOR ASSY From Y-7046 To 8-9278					
70	Y2-1864-00	BAGGAGE DOOR ASSY - BUS From Y-7046 To 6-8906					
70	Y2-1864-50	BAGGAGE DOOR ASSY - MTH From Y-7046 To 8-9339					
70	Y2-1864-60	BAGGAGE DOOR R.H. - W/HINGE "SPECIAL" From Y-7046 To 8-9339					
70	Y2-1864-80	BAGGAGE DOOR - W.C.L."RICON" From Y-7046 To 6-8906					
70	Y2-1864-90	BAGGAGE DOOR - W/"SLIDE-OUT" INSTALLATION From Y-7046 To 2-7763					
70	Y2-1864-91	BAGGAGE DOOR - W/"SLIDE-OUT" INSTALLATION From 2-7764 To 8-9339					
75	Y2-1865-00	FLOOR BAGGAGE COMPARTMENT - BUS From Y-7046 To 1-7680					
75	Y2-1865-01	FLOOR BAGGAGE COMPARTMENT - BUS From 1-7681 To 6-8906					
75	Y2-1865-10	SEPARATOR PANEL - BAGGAGE COMPARTMENT - BUS From Y-7046 To 6-8906					
75	Y2-1865-20	EVAPORATOR & CONDENSOR WALL From Y-7046 To 8-9339					
75	Y2-1865-50	FLOOR BAGGAGE COMPARTMENT - MTH From Y-7046 To 6-8805					
75	Y2-1865-51	FLOOR BAGGAGE COMPARTMENT - MTH From 6-8806 To 8-9339					
75	Y2-1865-55	SEPARATOR PANEL - BAGGAGE COMPARTMENT - MTH From Y-7046 To 6-8805					
75	Y2-1865-56	SEPARATOR PANEL - BAGGAGE COMPARTMENT - MTH From 6-8806 To 8-9339					
75	Y2-1865-60	SEPARATOR PANEL - BAGGAGE COMPARTMENT - MTH From Y-7046 To 6-8805					
75	Y2-1865-61	SEPARATOR PANEL - BAGGAGE COMPARTMENT - MTH From 6-8806 To 8-9339					
80	Y2-1866-00	EVAPORATOR DOOR ASSY - BUS From Y-7046 To 6-8906					
80	Y2-1866-50	EVAPORATOR DOOR ASSY - MTH From Y-7046 To 6-8805					
80	Y2-1866-51	EVAPORATOR DOOR ASSY - MTH From 6-8806 To 8-9339					
85	Y2-1867-00	KEY & CYLINDER CODE "FORD" & "NS" From Y-7046 To 8-9339					
90	Y2-1868-00	A/C COMPRESSOR DOOR ASSY From Y-7046 To 3-8164					
90	Y2-1868-01	A/C COMPRESSOR DOOR ASSY From 4-8165 To 8-9339					
95	Y2-1869-00	RADIATOR DOOR ASSY From Y-7046 To 3-8164					
95	Y2-1869-01	RADIATOR DOOR ASSY - BUS From 4-8165 To 6-8906					
95	Y2-1869-50	RADIATOR DOOR ASSY - MTH-45' SMALL From 4-8165 To 8-9339					
95	Y2-1869-55	RADIATOR DOOR ASSY - MTH-40' & MTH-45' ENT From 4-8165 To 8-9339					
95	Y2-1869-60	RADIATOR DOOR ASSY - MTH-45' LARGE From 4-8165 To 8-9339					
100	Y2-1870-00	ENGINE DOOR ASSY L.H. From Y-7046 To 3-8164					
100	Y2-1870-01	ENGINE DOOR ASSY L.H. From 4-8165 To 8-9339					
100	Y2-1870-05	ENGINE DOOR ASSY R.H. From Y-7046 To 3-8164					
100	Y2-1870-06	ENGINE DOOR ASSY R.H. From 4-8165 To 8-9339					
105	Y2-1870-10	ENGINE DOOR ASSY - INSTALLATION From Y-7046 To 8-9339					
110	Y2-1875-00	FUEL TANK FILLING DOOR From Y-7046 To 8-9339					
115	Y2-1879-00	FRONT SERVICE DOOR ASSY From Y-7046 To 8-9339					
115	Y2-1879-10	FRONT SERVICE DOOR - INSTALLATION From Y-7046 To 8-9339					
120	Y2-1879-50	REAR SERVICE DOOR - L.H. SIDE From Y-7046 To 3-8164					

		Date:07/2024	PAGE:Y2-18-EXT

BODY EXTERIOR

Item#	Part	Description	XLII 45	XLII MTH40	XLII MTH45	XLII MTH45E	NOTES
120	Y2-1879-51	REAR SERVICE DOOR - L.H. SIDE From 4-8165 To 8-9339					
125	Y2-1879-60	REAR SERVICE DOOR - R.H. SIDE From Y-7046 To 8-9339					
130	Y2-1880-00	WINDSHIELD & CHANNEL - W/1 LOCK From Y-7046 To 2-7913					
130	Y2-1880-01	WINDSHIELD & CHANNEL - W/2 LOCK From 2-7914 To 8-9339					
135	Y2-1884-00	SIDE WINDOW - BUS From Y-7046 To 6-8906					
135	Y2-1884-50	SIDE WINDOW - MTH From Y-7046 To 8-9339					
135	Y2-1884-60	AWNING WINDOW - MTH From Y-7046 To 8-9339					
135	Y2-1884-65	ELECTRICAL AWNING WINDOW ASSY From 4-8325 To 8-9339					
135	Y2-1884-80	ELECTRICAL SLIDING WINDOW ASSY From 7-9189 To 8-9339					
135	Y2-1884-90	SIDE WINDOW - "SLIDE-OUT" From Y-7046 To 6-8805					
135	Y2-1884-91	SIDE WINDOW - "SLIDE-OUT" From 6-8806 To 8-9339					
140	Y2-1886-00	POWER WINDOW - ELECTRICAL INSTALLATION From Y-7046 To 6-8901					
140	Y2-1886-01	POWER WINDOW - ELECTRICAL INSTALLATION From 6-8902 To 8-9339					
145	Y2-1890-00	ROOF STRUCTURE From Y-7046 To 8-9339					
145	Y2-1890-10	STRUCTURE WALL - UPPER From Y-7046 To 8-9339					
150	Y2-1891-00	LOWER WALL STRUCTURE - BUS From Y-7046 To 6-8906					
150	Y2-1891-50	LOWER WALL STRUCTURE - MTH 40' From Y-7046 To 5-8813					
150	Y2-1891-55	LOWER WALL STRUCTURE - MTH 45' ENT 86" From Y-7046 To 1-7631					
150	Y2-1891-56	LOWER WALL STRUCTURE - MTH 45' ENT 89" From Y-7046 To 8-9339					
150	Y2-1891-60	LOWER WALL STRUCTURE - MTH 45' From Y-7046 To 8-9339					
155	Y2-1893-00	BAGGAGE COMPARTMENT STRUCTURE From Y-7046 To 6-8906					
155	Y2-1893-50	BAGGAGE COMPARTMENT STRUCTURE From Y-7046 To 6-8805					
160	Y2-1894-00	REAR CAP - STRUCTURE From Y-7046 To 8-9339					
160	Y2-1894-05	REAR LH - STRUCTURE From Y-7046 To 3-8164					
160	Y2-1894-06	REAR LH - STRUCTURE From 4-8165 To 8-9339					
160	Y2-1894-10	REAR RH - STRUCTURE From Y-7046 To 7-9095					
160	Y2-1894-11	REAR RH - STRUCTURE From 7-9096 To 8-9339					
165	Y2-1895-00	FRONT STRUCTURE From Y-7046 To 8-9339					
165	Y2-1895-10	FRONT LOWER FLOOR STRUCTURE - BUS From Y-7046 To 6-8906					
165	Y2-1895-50	FRONT LOWER FLOOR STRUCTURE - MTH From Y-7046 To 6-8906					
170	Y2-1896-00	FRONT SHEATING - BUS From Y-7046 To 6-8906					
170	Y2-1896-50	FRONT SHEATING - MTH From Y-7046 To 8-9339					
175	Y2-1897-00	FRONT SUB-FRAME / W/I BEAM RIGID SUSPENSION From Y-7046 To 6-8906					
175	Y2-1897-10	REAR SUB-FRAME BUS & MTH-45' From Y-7046 To 8-9339					
175	Y2-1897-11	REAR SUB-FRAME MTH-45' ENT From 7-9096 To 8-9339					
175	Y2-1897-50	FRONT SUB-FRAME / W/INDEPENDENT SUSPENSION - 16500 LBS From Y-7046 To 3-8164					
175	Y2-1897-51	FRONT SUB-FRAME / W/INDEPENDENT SUSPENSION - 18000 LBS From 4-8165 To 8-9339					
180	Y2-1898-00	ESCAPE HATCH - INSTALLATION From Y-7046 To 5-8699					
181	Y2-1898-01	ESCAPE HATCH - INSTALLATION From 5-8700 To 8-9339					

From Y-7046 To 2-7764		Date:07/2024	PAGE:Y2-1850-00
BUMPER FRONT			

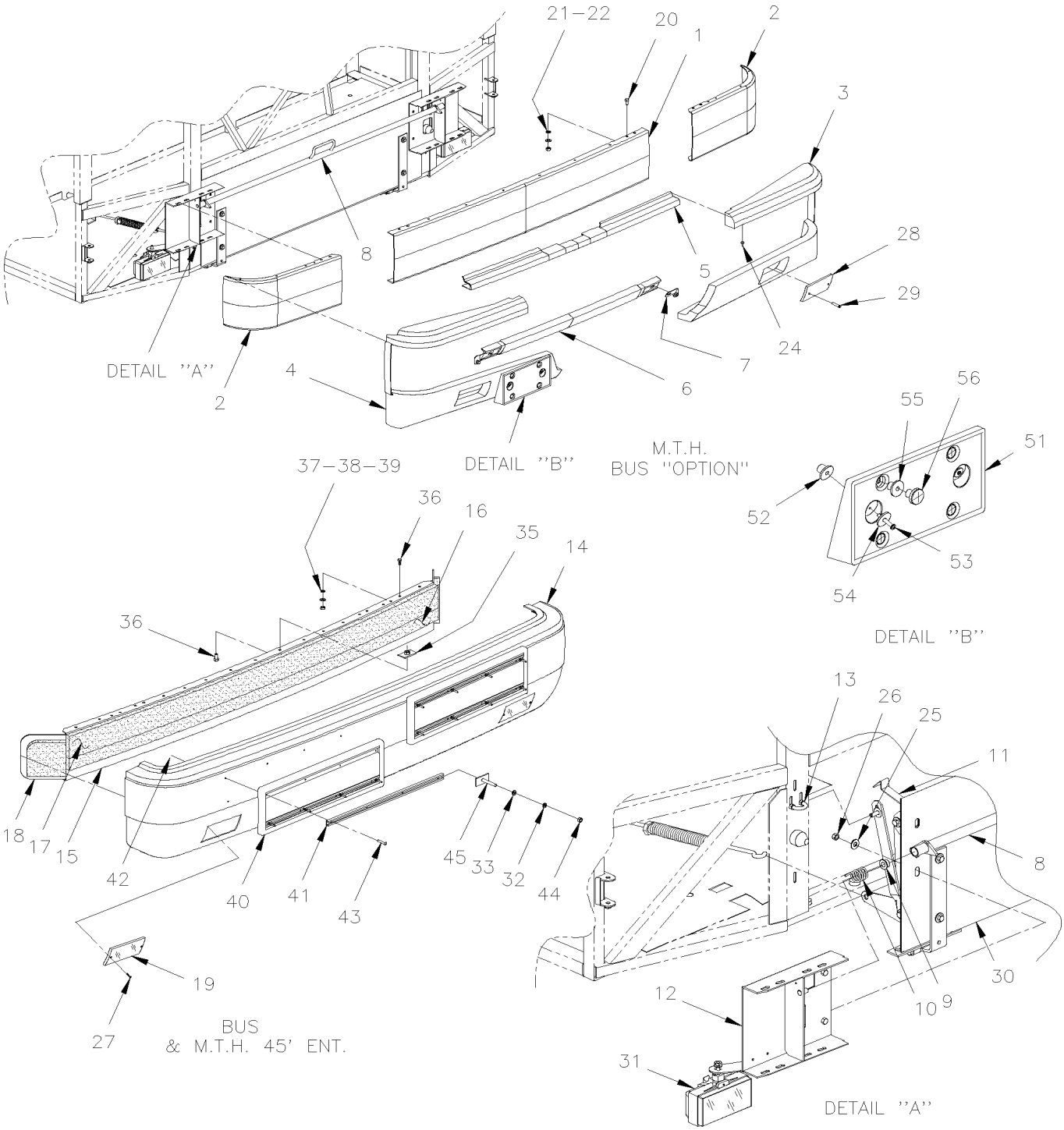

From Y-7046 To 2-7764		Date:07/2024	PAGE:Y2-1850-00

BUMPER FRONT

Item#	Part	Description	XLII 45	XLII MTH40	XLII MTH45	XLII MTH45E	NOTES
		NEXT BUMPER IT STANDARD ON MTH-40 & MTH-45					
		AND IT "OPTIONAL" WITH MTH-45' ENT					
	410679P	BUMPER ASSY / FRONT		1	1	1	E
1	410655	. BUMPER CENTER PART / SS		1	1	1	E
2	410674	. BUMPER CORNER / SS / S.B.		2	2	2	E
3	410675	. MOULDING L.H.		1	1	1	E
4	410676	. MOULDING R.H.		1	1	1	E
5	410677	. MOULDING UPPER		1	1	1	E
6	410678	. MOULDING LOWER		1	1	1	E
7	410723	. SUPPORT L.H.		1	1	1	E
7	410724	. SUPPORT R.H.		1	1	1	E
NS	500163	. SCREW CAP HEX 1/4-20x3/4 G5 Z050		4	4	4	E
NS	500441	. WASHER FL .312x.734x.065 Z050		1	1	1	E
8	410669	. HANDLE / RELEASE		1	1	1	E
9	410667	. BUSHING NYLON		2	2	2	E
10	410672	. SPRING		2	2	2	E
11	410656	SAFETY HOOK	1	1	1	1	
12	410795	SUPPORT R.H. To Y-7288		1	1	1	E
12	410814	SUPPORT R.H. From Y-7289		1	1	1	E
12	410797	SUPPORT L.H. To Y-7288		1	1	1	E
12	410813	SUPPORT L.H. From Y-7289		1	1	1	E
12	410761	SUPPORT L.H. To Y-7288	1			1	
12	410815	SUPPORT L.H. From Y-7289	1			1	
12	410762	SUPPORT R.H. To Y-7288	1			1	
12	410816	SUPPORT R.H. From Y-7289	1			1	
13	5001424	U-BOLT 1" I.D. x 2 3/16 x 5/16-18 SS	2			2	
		NEXT BUMPER IT STANDARD ON BUS & MTH-45 "ENT"					
14	410775P	BUMPER ASSY, FRONT BUS & MTH ENT To 1-7596	1			1	A
14	410854P	BUMPER To 1-7596	1			1	S
14	410772	. BUMPER SKIN, FRONT BUS & MTH ENT To 1-7596	1			1	B
14	410839	. BUMPER ASSY, FRONT BUS & MTH ENT From 1-7597	1			1	S
15	410766	. BUMPER REINFORCEMENT To 1-7596	1			1	
15	410842	. BUMPER REINFORCEMENT To 1-7596	1			1	S
15	410820	. REINFORCEMENT PLATE / 495MM x 45MM To 1-7596	4			4	
15	410821	. REINFORCEMENT PLATE / 225MM x 45MM To 1-7596	2			2	
16	410770	. CUSHION LOWER	1			1	
17	410769	. CUSHION UPPER	1			1	
18	410771	. CUSHION CORNER	2			2	

From Y-7046 To 2-7764		Date:07/2024	PAGE:Y2-1850-00

BUMPER FRONT

Item#	Part	Description	XLII 45	XLII MTH40	XLII MTH45	XLII MTH45E	NOTES
19	410773	FOG COVER LH	1			1	D
19	410776	FOG COVER RH	1			1	D
20	500191	SCREW CAP HEX 3/8-16x1 G5 Z050	4	4	4	4	
21	500478	WASHER LO SPT .380x.683x.094 Z050	4	4	4	4	
22	500445	WASHER FL .437x1.000x.083 Z050	4	4	4	4	
24	5001438	RIVET DRV TR 1/4x3/4 NYL		AR	AR		
25	500270	WASHER FL .406x1.000x.063 SS	4	4	4	4	
26	500102	NUT HEX 3/8-16 SS	4	4	4	4	
27	500952	SCREW TP BDG PH #8x1/2 SS	4			4	
28	410835	FOG COVER	2				
29	5001438	RIVET DRV TR 1/4x3/4 NYL	4				
30	**Y2-1860-10**	**SPARE WHEEL DOOR ASSY**					
31	**Y2-0661-00**	**FOG LAMP**					
32	502570	WASHER LO SPT 6.1x11.8x1.6 SS	8				
33	502637	WASHER FL .200x.437x.037 SS	8				
35	410878	ANCHOR NUT / M10-1.5 From 1-7596	23			23	
36	500191	SCREW CAP HEX 3/8-16x1 G5 Z050 To 1-7595	39			39	
36	5001444	SCREW CAP HEX M10-1.5x22 G8.8 ZP From 1-7596	39			39	
37	500478	WASHER LO SPT .380x.683x.094 Z050	AR			AR	
37	502644	WASHER FL 10.5x30.0x2.5 Z050	AR			AR	
38	500478	WASHER LO SPT .380x.683x.094 Z050 To 1-7596	AR			AR	
38	500257	WASHER LO SPT 10.2x18.1x2.2 Z050 From 1-7597	1			1	
39	500680	NUT HEX STO M10-1.5 Z050	AR			AR	
40	410817	MOULDING / PLATE HOLDER	1				
41	410818	TRACK / LICENCE PLATE HOLDER 630MM	1				
42	500589	NUT WELL M4-0.7x13.5	8				
43	502809	SCREW MA OV PH M4-0.7x30 SS BK	8				
44	500787	NUT HEX #10-24 SS	8				
NS	507333	PROTECTOR CAP / BLACK / .172 I.D. x .500	8				
45	504286	T SCREW 10-24 X 3/4" / SS / PLATE HOLDER	8				
51	410827	. MOULDING / PLATE HOLDER	2			2	
52	5001055	NUT WELL M4-0.7x14.5	4			4	
53	502677	SCREW MA RND PH M4-0.7x25 SS	4			4	
54	502759	WASHER FL .218x.875x.062 SS	4			4	
55	5001009	NUT AN 1/4 NYL	8			8	
56	5001245	SCREW TC CAP HEXW SLT #12-24x1/2 Z050	8			8	
		A) THIS BUMPER ARE SUPERSEDED BY 410854P					
		B) THIS BUMPER ARE SUPERSEDED BY 410899					
		C) USE ONLY WITH OLD # 410766 WITH NEW BUMPER ASSY #410899 UP TO 1-7596					

From Y-7046 To 2-7764		Date:07/2024	PAGE:Y2-1850-00

BUMPER FRONT

Item#	Part	Description	XLII 45	XLII MTH40	XLII MTH45	XLII MTH45E	NOTES
		D) THOSE COVER DO NOT FIT WITH SERVICE BUMPER #410854 & #410839					
		E) "OPTIONAL" WITH MTH-45' ENT					
		S) USE IN SERVICE ONLY FOR SKIN REPLACEMENT					

From 2-7765 To 4-8358		Date:07/2024	PAGE:Y2-1850-01
BUMPER FRONT			

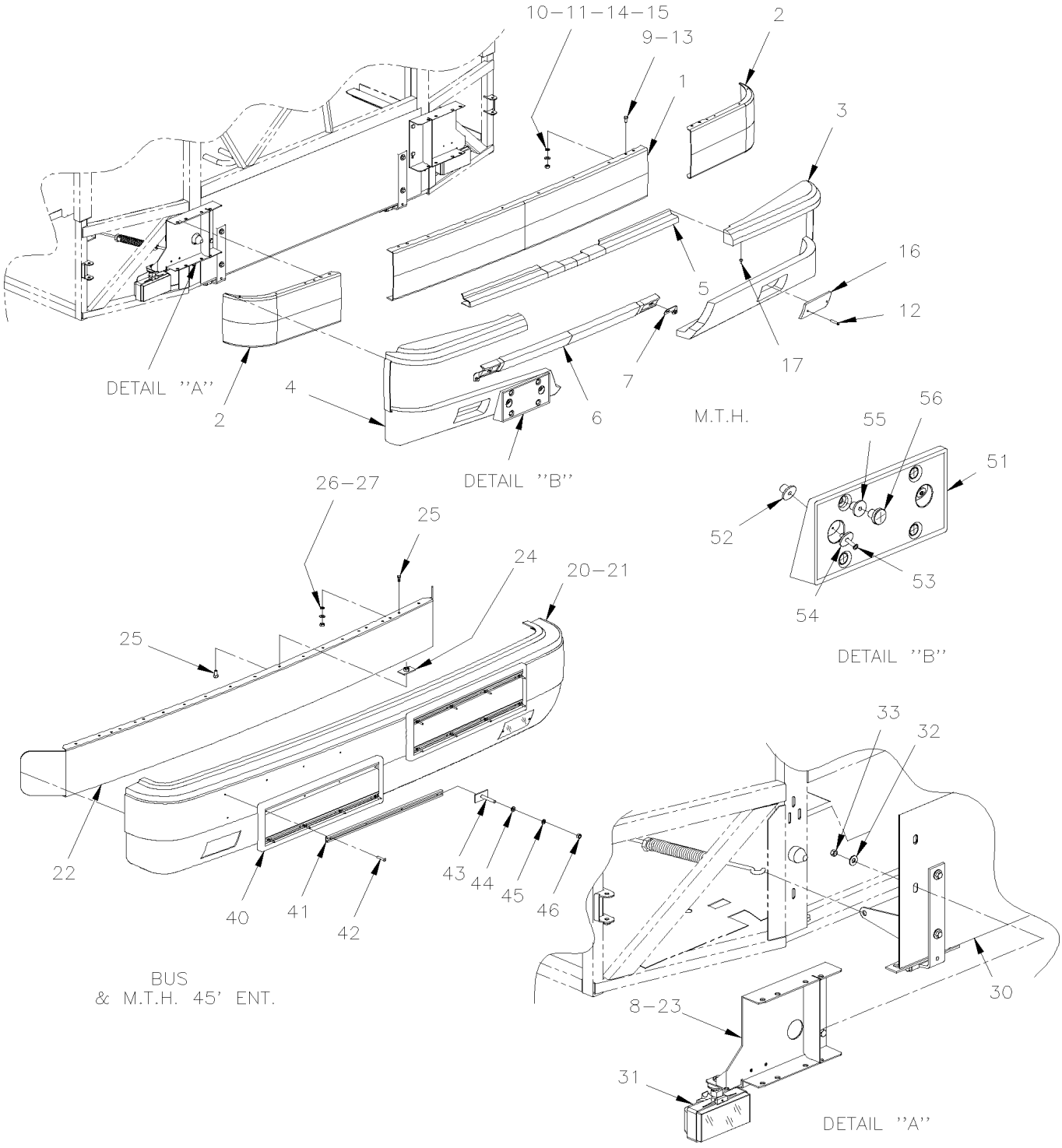

From 2-7765 To 4-8358		Date:07/2024	PAGE:Y2-1850-01

BUMPER FRONT

Item#	Part	Description	XLII 45	XLII MTH40	XLII MTH45	XLII MTH45E	NOTES
		NEXT BUMPER IT STANDARD ON MTH-40 & MTH-45					
		AND IT "OPTIONAL" WITH MTH-45' ENT					
	410931P	BUMPER ASSY W/FOG LAMP		1	1	1	A
1	410655	. BUMPER CENTER PART / SS		1	1	1	A
2	410674	. BUMPER CORNER / SS / S.B.		2	2	2	A
3	410675	. MOULDING L.H.		1	1	1	A
4	410676	. MOULDING R.H.		1	1	1	A
5	410677	. MOULDING UPPER		1	1	1	A
6	410678	. MOULDING LOWER		1	1	1	A
7	410723	. SUPPORT L.H.		1	1	1	A
7	410724	. SUPPORT R.H.		1	1	1	A
NS	500163	. SCREW CAP HEX 1/4-20x3/4 G5 Z050		2	2	2	A
NS	500270	. WASHER FL .406x1.000x.063 SS		2	2	2	A
8	410934	SUPPORT L.H.		1	1	1	A
8	410933	SUPPORT R.H.		1	1	1	A
9	5001444	. SCREW CAP HEX M10-1.5x22 G8.8 ZP		16	16	16	A
10	500257	. WASHER LO SPT 10.2x18.1x2.2 Z050		16	16	16	A
11	502644	. WASHER FL 10.5x30.0x2.5 Z050		16	16	16	A
12	5001438	. RIVET DRV TR 1/4x3/4 NYL		20	20	20	A
13	500163	. SCREW CAP HEX 1/4-20x3/4 G5 Z050		2	2	2	A
14	500441	. WASHER FL .312x.734x.065 Z050		2	2	2	A
15	502716	. NUT HEX NYRT 1/4-20		2	2	2	A
16	410835	FOG COVER		2	2	2	A
17	5001438	RIVET DRV TR 1/4x3/4 NYL		4	4	4	A
		NEXT BUMPER IT STANDARD ON BUS & MTH-45 "ENT"					
20	410928P	BUMPER ASSY, FRONT BUS & MTH ENT	1			1	
21	410839	. BUMPER ASSY, FRONT BUS & MTH ENT	1			1	
22	410842	. BUMPER REINFORCEMENT	1			1	
23	410906	. SUPPORT R.H.	1			1	
23	410907	. SUPPORT L.H.	1			1	
24	410878	. ANCHOR NUT / M10-1.5	23			23	
25	5001444	. SCREW CAP HEX M10-1.5x22 G8.8 ZP	39			39	
26	500257	. WASHER LO SPT 10.2x18.1x2.2 Z050	16			16	
27	502644	. WASHER FL 10.5x30.0x2.5 Z050	16			16	
30	**Y2-1860-11**	**SPARE WHEEL DOOR ASSY**					
31	**Y2-0661-00**	**FOG LAMP**					
32	500270	WASHER FL .406x1.000x.063 SS	4	4	4	4	
33	500102	NUT HEX 3/8-16 SS	4	4	4	4	

From 2-7765 To 4-8358		Date:07/2024	PAGE:Y2-1850-01

BUMPER FRONT

Item#	Part	Description	XLII 45	XLII MTH40	XLII MTH45	XLII MTH45E	NOTES
40	410817	MOULDING / PLATE HOLDER	1			1	
41	410818	TRACK / LICENCE PLATE HOLDER 630MM	1			1	
42	500360	SCREW TP FL PH #8x1 1/4 BK	8			8	
43	504286	T SCREW 10-24 X 3/4" / SS / PLATE HOLDER	8			8	
44	502637	WASHER FL .200x.437x.037 SS	8			8	
NS	502570	WASHER LO SPT 6.1x11.8x1.6 SS	8			8	
45	500787	NUT HEX #10-24 SS	8			8	
46	507333	PROTECTOR CAP / BLACK / .172 I.D. x .500	8			8	
51	410827	MOULDING / PLATE HOLDER		2	2	2	
52	5001055	NUT WELL M4-0.7x14.5		4	4	4	
53	502677	SCREW MA RND PH M4-0.7x25 SS		4	4	4	
54	502759	WASHER FL .218x.875x.062 SS		4	4	4	
55	5001009	NUT AN 1/4 NYL		8	8	8	
56	5001245	SCREW TC CAP HEXW SLT #12-24x1/2 Z050		8	8	8	
		A) "OPTIONAL" WITH MTH-45' ENT					

From 4-8359 To 8-9339		Date:07/2024	PAGE:Y2-1850-02
BUMPER FRONT			

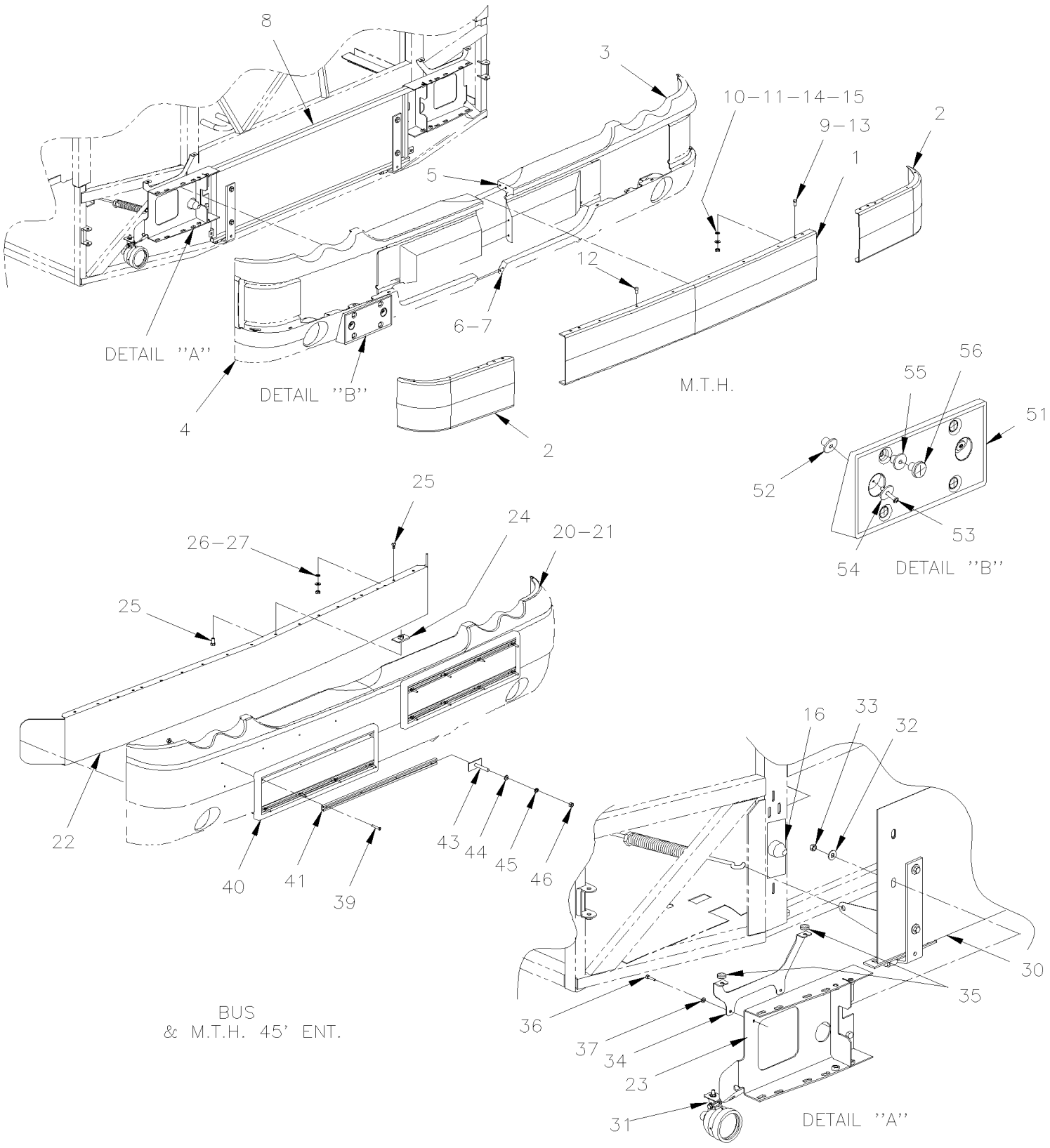

From 4-8359 To 8-9339		Date:07/2024	PAGE:Y2-1850-02

BUMPER FRONT

Item#	Part	Description	XLII 45	XLII MTH40	XLII MTH45	XLII MTH45E	NOTES
		NEXT BUMPER IT STANDARD ON MTH-40 & MTH-45					
		AND IT "OPTIONAL" WITH MTH-45' ENT					
	411088	BUMPER ASSY W/FOG LAMP / S.B. To 5-8468		1	1	1	
	411099	BUMPER ASSY W/FOG LAMP W/OUT HEAD LAMP WASHER HOLE / B.A. From 5-8469		1	1	1	
1	411018	. BUMPER CENTER PART / SS / S.B. To 5-8468		1	1	1	
1	411117	. BUMPER CENTER PART / SS / S.B. From 7-9281 To SERVICE		1	1	1	
1	411058	. BUMPER CENTER PART / SS / S.B.2B From 5-8469 To 7-9280		1	1	1	
1	411116	. BUMPER CENTER PART / SS / B.A. From 7-9281		1	1	1	
2	410674	. BUMPER CORNER / SS / S.B. To 5-8468		2	2	2	
2	411057	. BUMPER CORNER / SS / S.B From 5-8469		2	2	2	
3	411013	. MOULDING L.H.		1	1	1	
4	411012	. MOULDING R.H.		1	1	1	
NS	504716	. BUMPER RUBBER / .875OD X .256 TH X .312 HOLE		1	1	1	
5	411036	. ATTACHMENT UPPER / CURBSIDE		1	1	1	
5	411042	. ATTACHMENT UPPER / STREETSIDE		1	1	1	
6	411037	. ATTACHMENT LOWER / STREETSIDE		1	1	1	
7	411038	. ATTACHMENT LOWER / CURBSIDE		1	1	1	
7	411055	. ATTACHMENT "U" SHAPE W/NUT		1	1	1	
NS	5001587	. NUT HEX NYRT M5-0.8 SS		2	2	2	
NS	5001146	. SCREW CAP HEX M5-0.8x20 SS BK		2	2	2	
8	411024	. STRUCTURE BUMPER To 7-9280		1	1	1	
8	411118	. STRUCTURE BUMPER From 7-9281		1	1	1	
8	411021	. . SUPPORT CUBRE SIDE / WELDED To 7-9280		1	1	1	
8	411114	. . SUPPORT CUBRE SIDE / WELDED From 7-9281		1	1	1	
8	411022	. . SUPPORT STREET SIDE / WELDED To 7-9280		1	1	1	
8	411115	. . SUPPORT STREET SIDE / WELDED From 7-9281		1	1	1	
9	5001675	. SCREW SET HEXS CONE M8-1.25x16 SS		16	16	16	
10	960143	. WASHER FL 10.5x26.0x2.0 ZP		16	16	16	
11	3852496	. WASHER LO SPT 10.2x18.1x2.2 ZG603		16	16	16	
12	5001438	. RIVET DRV TR 1/4x3/4 NYL		28	28	28	
13	500163	. SCREW CAP HEX 1/4-20x3/4 G5 Z050		2	2	2	
14	500441	. WASHER FL .312x.734x.065 Z050		2	2	2	
15	502716	. NUT HEX NYRT 1/4-20		2	2	2	
16	287258	RUBBER BUMPER 126MM X 48MM		4	4	4	
NS	502603	SCREW CAP HEXS M4-0.7x20 G12.9 ZP		8	8	8	
NS	411084	SHIM SPACER		AR	AR	AR	
		NEXT BUMPER IT STANDARD ON BUS & MTH-45 "ENT"					
20	411089	BUMPER ASSY / FRONT	1			1	
21	411010	. BUMPER SKIN, FRONT BUS & MTH ENT	1			1	

From 4-8359 To 8-9339		Date:07/2024	PAGE:Y2-1850-02

BUMPER FRONT

Item#	Part	Description	XLII 45	XLII MTH40	XLII MTH45	XLII MTH45E	NOTES
22	411014	. BUMPER REINFORCEMENT	1			1	
22	411209	. BUMPER REINFORCEMENT	1			1	
23	411025	. SUPPORT CUBRE SIDE	1			1	
23	411026	. SUPPORT STREET SIDE	1			1	
24	410878	. ANCHOR NUT / M10-1.5	22			22	
25	500359	. SCREW CAP HEX M10-1.5x22 G8.8 N500	22			22	
26	3852496	. WASHER LO SPT 10.2x18.1x2.2 ZG603	16			16	
27	5001417	. WASHER FL 11.0x34.0x3.0 SS	16			16	
30	**Y2-1860-11**	**SPARE WHEEL DOOR ASSY**					
31	**Y2-0661-01**	**FOG LAMP**					
32	500270	WASHER FL .406x1.000x.063 SS	4	4	4	4	
33	500102	NUT HEX 3/8-16 SS	4	4	4	4	
34	411054	SUPPORT UPPER CORNER STREETSIDE	1	1	1	1	
34	411053	SUPPORT UPPER CORNER CURBSIDE	1	1	1	1	
35	504716	BUMPER RUBBER / .875OD X .256 TH X .312 HOLE	2	2	2	2	
36	502622	SCREW CAP HEX M6-1.0x20 SS BK	4	4	4	4	
37	502510	WASHER FL .375x.875x.083	4	4	4	4	
39	500360	SCREW TP FL PH #8x1 1/4 BK	AR			AR	
40	410817	MOULDING / PLATE HOLDER	1			1	
41	410818	TRACK / LICENCE PLATE HOLDER 630MM	1			1	
42	500360	SCREW TP FL PH #8x1 1/4 BK	8			8	
43	504286	T SCREW 10-24 X 3/4" / SS / PLATE HOLDER	8			8	
44	502637	WASHER FL .200x.437x.037 SS	8			8	
44	502570	WASHER LO SPT 6.1x11.8x1.6 SS	8			8	
45	500787	NUT HEX #10-24 SS	8			8	
46	507333	PROTECTOR CAP / BLACK / .172 I.D. x .500	8			8	
51	410827	MOULDING / PLATE HOLDER		2	2	2	
52	5001055	NUT WELL M4-0.7x14.5		4	4	4	
53	502677	SCREW MA RND PH M4-0.7x25 SS		4	4	4	
54	502759	WASHER FL .218x.875x.062 SS		4	4	4	
55	5001009	NUT AN 1/4 NYL		8	8	8	
56	5001245	SCREW TC CAP HEXW SLT #12-24x1/2 Z050		8	8	8	

From Y-7046 To 8-9339		Date:07/2024	PAGE:Y2-1850-10
BUMPER REAR			

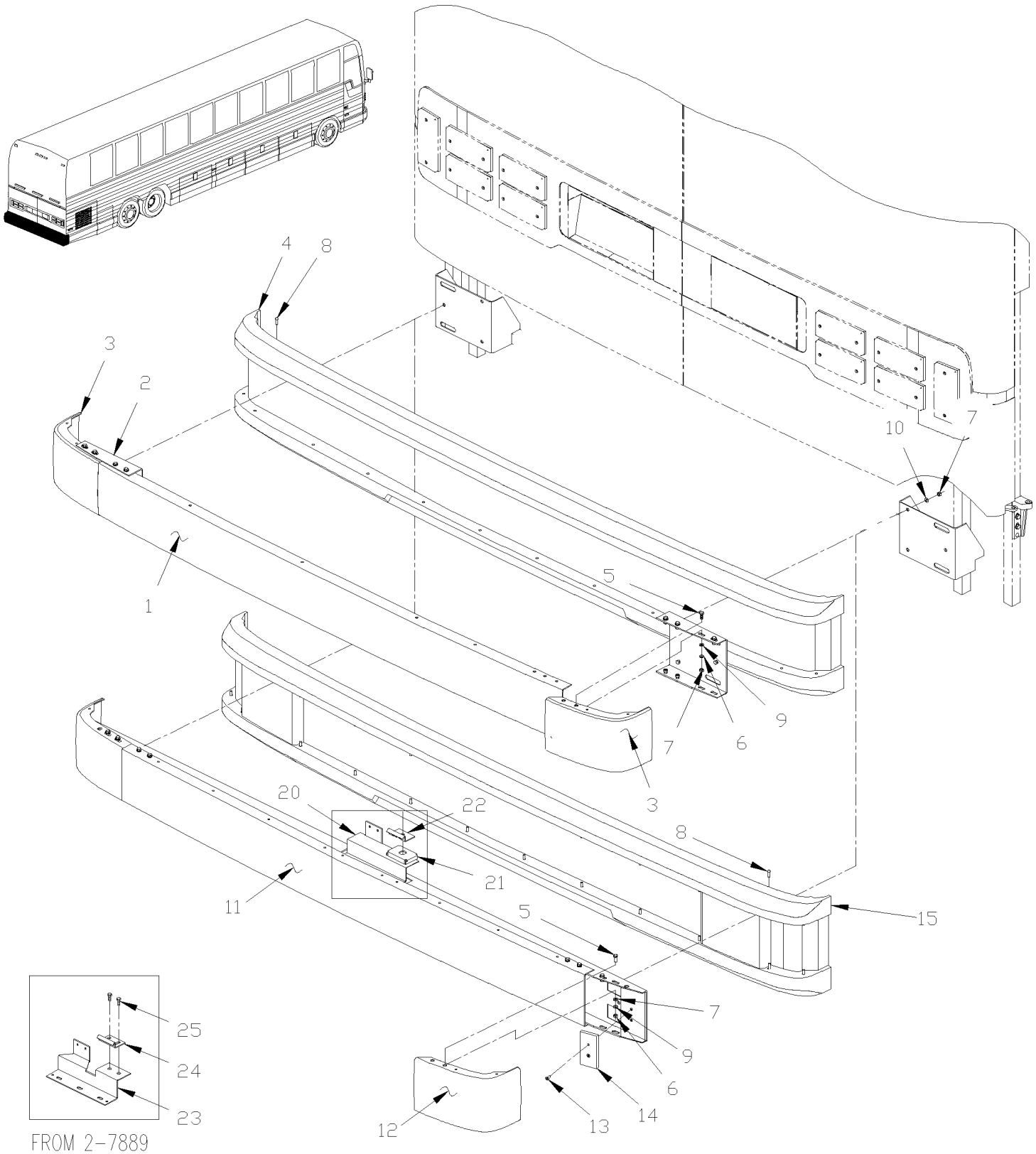

From Y-7046 To 8-9339		Date:07/2024	PAGE:Y2-1850-10

BUMPER REAR

Item#	Part	Description	XLII 45	XLII MTH40	XLII MTH45	XLII MTH45E	NOTES
		NEXT BUMPER IT STANDARD ON MTH-40 & MTH-45					
		AND IT "OPTIONAL" WITH MTH-45' ENT					
	411090P	BUMPER ASSY REAR CHROME / W/TRAILLER HITCH			1	1	
1	410652	. BUMPER REAR CENTER / SS To 2-7888		1	1	1	
1	410562	. BUMPER REAR CENTER / SS / S.B. From 2-7889 To 5-8468		1	1	1	
1	411059	. BUMPER REAR CENTER / SS / S.B.2B From 5-8469		1	1	1	
2	410691	. SUPPORT		2	2	2	
3	410689	. BUMPER / CORNER / SS / S.B. To 5-8468		2	2	2	
3	411061	. BUMPER / CORNER / SS / S.B.2B From 5-8469		2	2	2	
4	473858	. TRIM REAR BUMPER / W/TRAILLER HITCH		1	1	1	
4	473770	. TRIM REAR BUMPER / W/O TRAILLER HITCH		1	1	1	
5	5001231	. SCREW CAP HEX M10-1.5x25 SS	16	16	16	16	
6	500958	. WASHER FL .531x1.062x.095 SS	16	16	16	16	
7	502567	. NUT HEX M10-1.5 SS	16	16	16	16	
8	5001438	. RIVET DRV TR 1/4x3/4 NYL	23	23	23	23	
9	502585	. WASHER LO SERR 10.2x26.3x1.4 ZP	16	16	16	16	
10	284447	WASHERS BELLEVILLE	6	6	6	6	
		NEXT BUMPER IT STANDARD ON BUS & MTH-45 "ENT"					
11	410740P	BUMPER ASSY REAR BLACK	1			1	
NS	410741P	BUMPER ASSY REAR BLACK / W/TRAILER HITCH To 2-7888	1			1	A
11	Call order desk	BUMPER ASSY REAR BLACK	1				P C
11	410738	. BUMPER REAR CENTER / BLACK To 2-7888	1			1	
11	410563	. BUMPER REAR CENTER / BLACK From 2-7889	1			1	
11	411214	. BUMPER REAR CENTER / BLACK	1			1	
12	410748	. BUMPER / CORNER / BLACK	2			2	
13	5001198	. SCREW MA FL PH M6-1.0x16 Z050	4			4	
13	5001182	. NUT HEX NYRT M6-1.0 SS	4			4	
14	410737	. STOPPER	2			2	
15	473770	. TRIM REAR BUMPER / W/O TRAILLER HITCH	1			1	
15	474170	. TRIM REAR BUMPER / W/TRAILLER HITCH				1	A
15	417570	. TRIM REAR BUMPER / W/TRAILLER GLANDHAND To 6-8906	1				C
20	285984	ATTACMENT & STOPPER LH ENGINE DOOR / (WELDED TO BUMPER) To 2-7888	1			1	
21	282869	FLOATING NUT ASSY WITH CASE To 1-7627	1			1	
21	287943	FLOATING NUT ASSY WITH CASE From 1-7628 To 2-7888	1			1	
22	280141	CATCH PIN / RETAINER To 2-7888	1			1	B
23	287231	ATTACHMENT & STOPPER LH ENGINE DOOR / (WELDED TO BUMPER) From 2-7889	1			1	
24	287286	CATCH PIN / RETAINER 45MMx21MM 90° From 2-7889	1			1	B
25	502780	SCREW CAP HEX M8-1.25x25 SS BK From 2-7889	2			2	

From Y-7046 To 8-9339		Date:07/2024	PAGE:Y2-1850-10

BUMPER REAR

Item#	Part	Description	XLII 45	XLII MTH40	XLII MTH45	XLII MTH45E	NOTES
		A) THIS BUMPER ARE ASSY WITH TRIM W/TRAILER HITCH					
		B) THOSE PART ARE INCLUDED IN KIT #287225					
		C) THIS BUMPER ASSY ARE ASSY WITH TRIM FOR TRAILER CONNECTION RECESS					
		P) CALL ORDER DESK FOR SPECIFIC APPLICATION (V.I.N.)					

From Y-7046 To 6-8906		Date:07/2024	PAGE:Y2-1850-15
BUMPER REAR - BUS "OPTION" / "ROMEO RIM"			

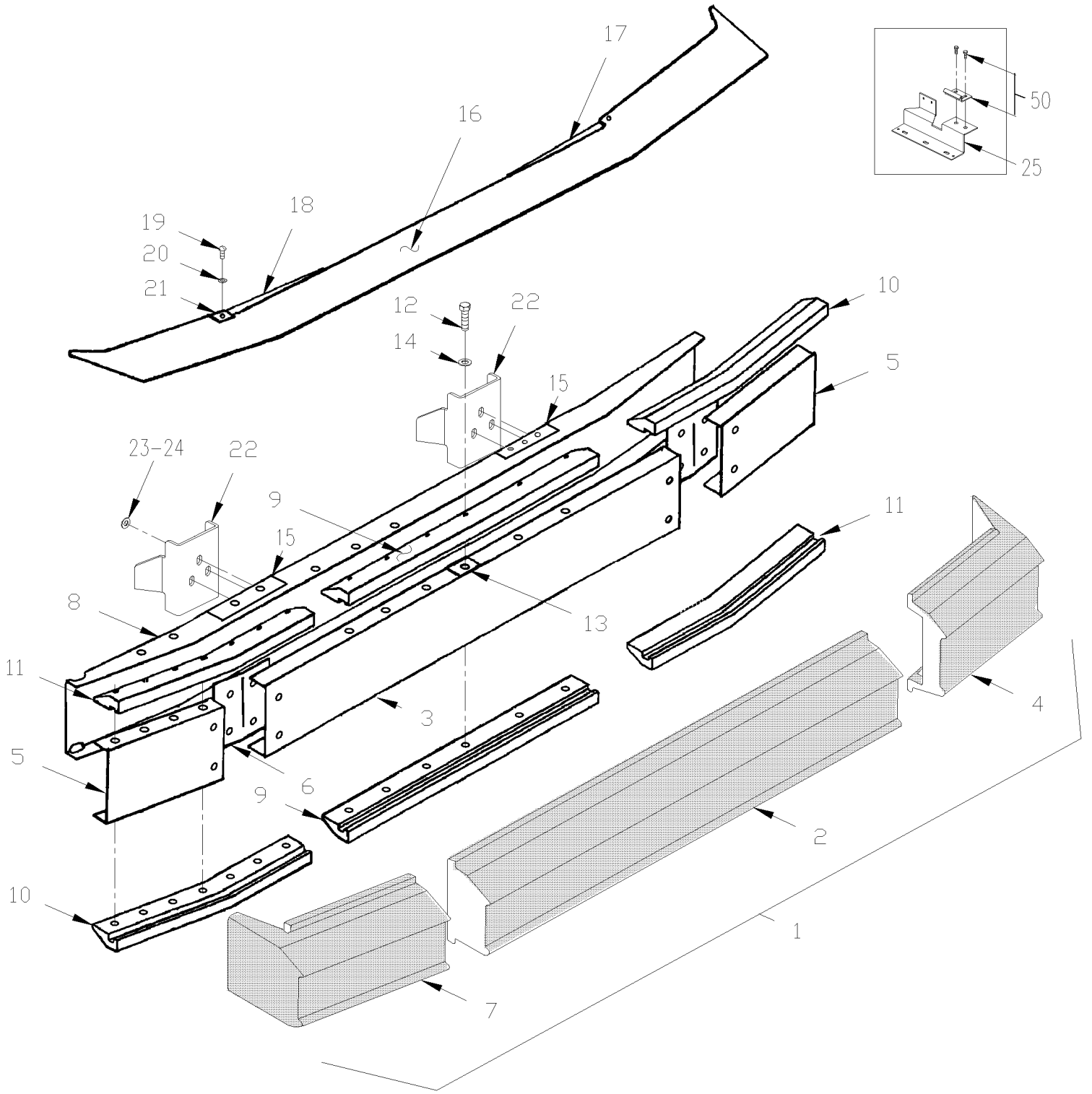

From Y-7046 To 6-8906		Date:07/2024	PAGE:Y2-1850-15

BUMPER REAR - BUS "OPTION" / "ROMEO RIM"

Item#	Part	Description	XLII 45	XLII MTH40	XLII MTH45	XLII MTH45E	NOTES
1	410624	BUMPER ASSY	1				
2	910010	. MODULE CENTER	1				
3	910013	. PLATE BACK / CENTER	1				
4	410592	. MODULE END / R.H.	1				
5	910016	. PLATE BACK / L.H. & R.H.	2				
6	910015	. SPACER PLASTIC	1				
7	410591	. MODULE END / L.H.	1				
8	910007	. STRUCTURE BACK-UP	1				
9	910014	. CLAMP CENTER	2				
10	910029	. CLAMP END / L.H. TOP & R.H. BOTTOM	2				
11	910028	. CLAMP END / R.H. TOP & L.H. BOTTOM	2				
12	910023	. SCREW CAP HEXF 1/2-13x2 1/4 BKC	38				
13	910024	. NUT RETAINER SPRING	34				
13	910025	. NUT HEXF 1/2-13 BK / 2 EACH CORNER	4				
14	500547	. WASHER FL .484x.750x.031 ZP	42				
15	910031	. SUPPORT W/3 BOLTS	2				
16	411107	PANEL / BLACK PAINT	1				
16	411106	. PANEL / UNPAINT	1				
17	410473	ATTACHMENT R.H. MOUNTING / REAR BUMPER	1				
18	410472	ATTACHMENT L.H. MOUNTING / REAR BUMPER	1				
19	502686	SCREW CAP HEX M6-1.0x30 SS BK	4				
20	502573	WASHER FL 6.4x12.5x1.6 SS	4				
21	502738	NUT SPR U M6-1.0 0.6-4.0	4				
22	216083	BRACKET BUMPER L.H. & R.H. / (WELDED AT STRUCTURE)	2				
23	500789	NUT HEX 1/2-13 Z050	6				
24	502901	WASHER FL .625x1.469x.109 N500	6				
NS	500482	WASHER LO SPT .506x.873x.125 Z050	6				
25	289372	ATTACHMENT & STOPPER LH ENGINE DOOR / BOLTED TO BUMPER	1				
NS	5001330	SCREW CAP HEX 1/2-13x1 SS	3				
NS	5001534	WASHER LO SPT .509x.873x.125 SS	3				
50	**Y2-1870-10**	**ENGINE DOOR ASSY - INSTALLATION**					

From Y-7046 To 8-9339		Date:07/2024	PAGE:Y2-1851-00
FRONT CAP - INSTALLATION			

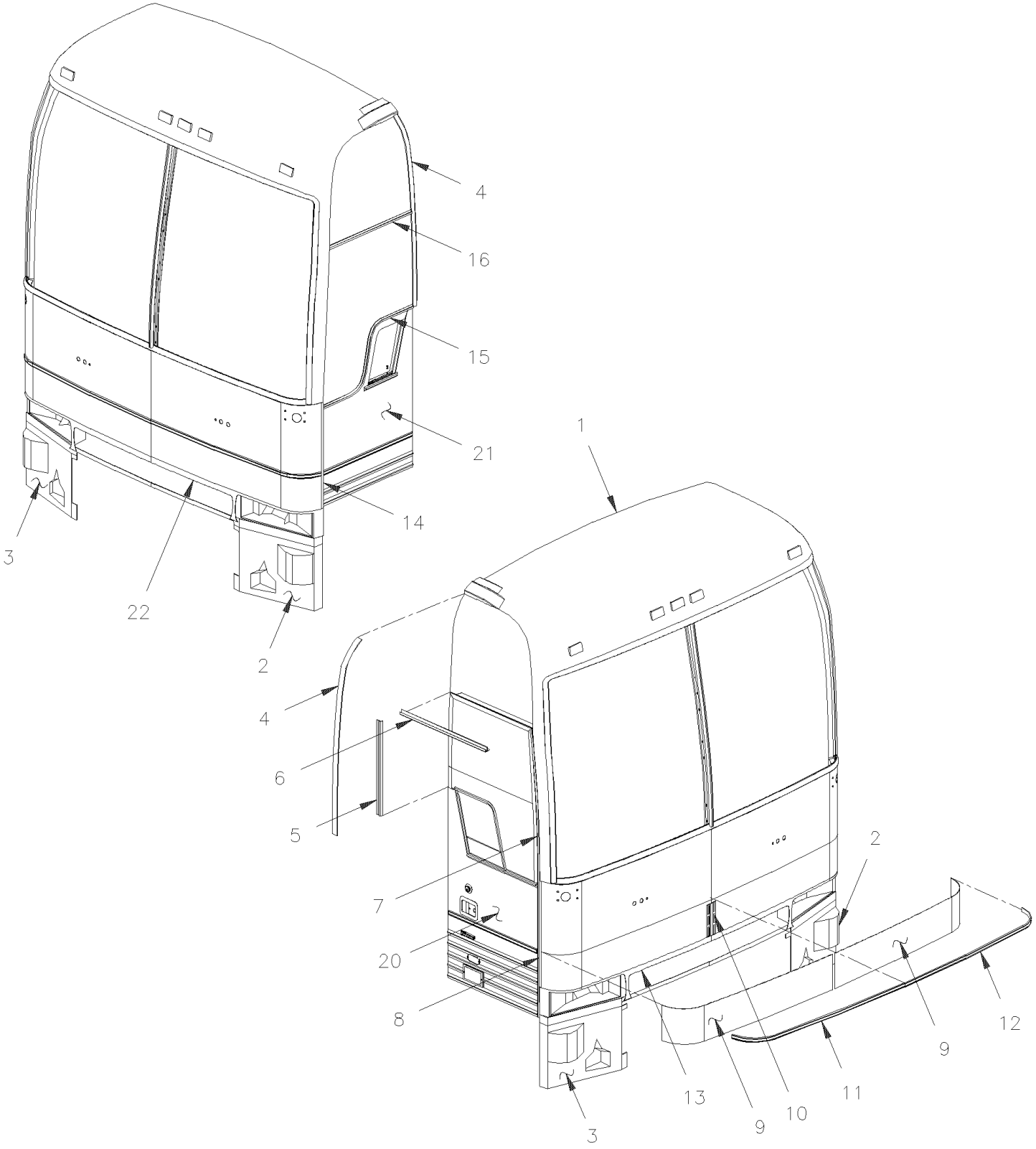

From Y-7046 To 8-9339		Date:07/2024	PAGE:Y2-1851-00
FRONT CAP - INSTALLATION			

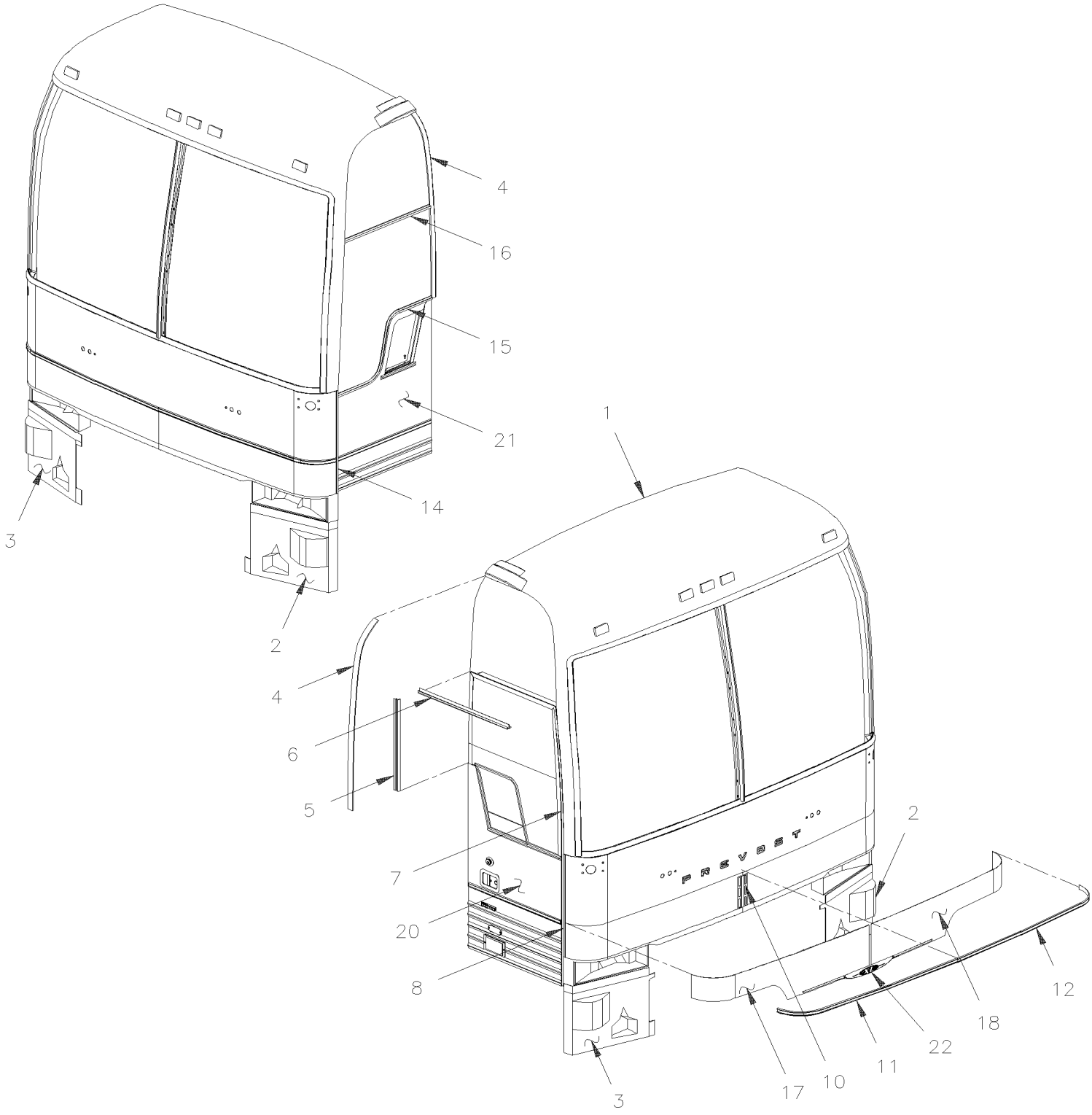

From Y-7046 To 8-9339		Date:07/2024	PAGE:Y2-1851-00

FRONT CAP - INSTALLATION

Item#	Part	Description	XLII 45	XLII MTH40	XLII MTH45	XLII MTH45E	NOTES
1	473735	FRONT CAP BUS 80" / WLARGE WINDSHIELD To 3-8108	1				
. NS	477410	. HALF FRONT CAP BUS / LOWER SECTION ONLY To 3-8108	1				
1	475775	FRONT CAP BUS 80" / WLARGE WINDSHIELD From 3-8109 To 4-8358	1				
. NS	477410	. HALF FRONT CAP BUS / LOWER SECTION ONLY From 3-8109 To 4-8358	1				
1	477445	FRONT CAP BUS 80" / WLARGE WINDSHIELD From 5-8359 To 6-8906	1				
. NS	477411	. HALF FRONT CAP BUS / LOWER SECTION ONLY From 5-8359 To 6-8906	1				
1	473612	FRONT CAP MTH 83" / WSMALL WINDSHIELD To Y-7128		1	1		
. NS	477412	. HALF FRONT CAP MTH 83" / LOWER SECTION ONLY To Y-7128		1	1		
1	474282	FRONT CAP MTH 83" / WLARGE WINDSHIELD To Y-7128		1	1		
. NS	477412	. HALF FRONT CAP MTH 83" / LOWER SECTION ONLY To Y-7128		1	1		
1	473732	FRONT CAP MTH 86" / WSMALL WINDSHIELD To 4-8167		1	1	1	B
. NS	477413	. HALF FRONT CAP MTH 86" / LOWER SECTION ONLY To 4-8167		1	1	1	B
1	474283	FRONT CAP MTH 86" / WLARGE WINDSHIELD To 4-8207		1	1	1	
. NS	477413	. HALF FRONT CAP MTH 86" / LOWER SECTION ONLY To 4-8207		1	1	1	
1	475783	FRONT CAP MTH 86" / WLARGE WINDSHIELD From 4-8208 To 4-8358		1	1	1	
. NS	477413	. HALF FRONT CAP MTH 86" / LOWER SECTION ONLY From 4-8208 To 4-8358		1	1	1	
1	477443	FRONT CAP MTH 86" / WLARGE WINDSHIELD From 5-8359		1	1	1	
. NS	477414	. HALF FRONT CAP MTH 86" / LOWER SECTION ONLY From 5-8359		1	1	1	
1	475053	FRONT CAP MTH 86" / WLARGE WINDSHIELD From 1-7448 To 4-8207		1	1	1	B
. NS	477413	. HALF FRONT CAP MTH 86" / LOWER SECTION ONLY From 1-7448 To 4-8207		1	1	1	B
1	475785	FRONT CAP MTH 86" / WLARGE WINDSHIELD From 4-8208 To 4-8358		1	1	1	B
. NS	477413	. HALF FRONT CAP MTH 86" / LOWER SECTION ONLY From 4-8208 To 4-8358		1	1	1	B
1	477444	FRONT CAP MTH 86" / WLARGE WINDSHIELD From 5-8359		1	1	1	B
. NS	477414	. HALF FRONT CAP MTH 86" / LOWER SECTION ONLY From 5-8359		1	1	1	B
1	473733	FRONT CAP MTH 89" / WLARGE WINDSHIELD To 4-8207				1	
. NS	477415	. HALF FRONT CAP MTH 89" / LOWER SECTION ONLY To 4-8207				1	
1	475779	FRONT CAP MTH 89" / WLARGE WINDSHIELD From 4-8208 To 4-8358				1	
. NS	477415	. HALF FRONT CAP MTH 89" / LOWER SECTION ONLY From 4-8208 To 4-8358				1	
1	477442	FRONT CAP MTH 89" / WLARGE WINDSHIELD From 5-8359				1	
. NS	477416	. HALF FRONT CAP MTH 89" / LOWER SECTION ONLY From 5-8359				1	
1	475378	FRONT CAP MTH 89" / WLARGE WINDSHIELD From 2-7744 To 4-8207				1	B
. NS	477415	. HALF FRONT CAP MTH 89" / LOWER SECTION ONLY From 2-7744 To 4-8207				1	B
1	475787	FRONT CAP MTH 89" / WLARGE WINDSHIELD From 4-8208 To 4-8358				1	B
. NS	477415	. HALF FRONT CAP MTH 89" / LOWER SECTION ONLY From 4-8208 To 4-8358				1	B
1	476205	FRONT CAP MTH 89" / WLARGE WINDSHIELD From 5-8359				1	B
. NS	477416	. HALF FRONT CAP MTH 89" / LOWER SECTION ONLY From 5-8359				1	B

From Y-7046 To 8-9339		Date:07/2024	PAGE:Y2-1851-00

FRONT CAP - INSTALLATION

Item#	Part	Description	XLII 45	XLII MTH40	XLII MTH45	XLII MTH45E	NOTES
2	474088	. PANEL LOWER L.H. To 4-8358	1	1	1	1	
2	477474	. PANEL LOWER L.H. From 5-8359	1	1	1	1	
3	474087	. PANEL LOWER R.H. To 3-8108	1				
3	475777	. PANEL LOWER R.H. From 3-8109 To 4-8358	1				
3	477475	. PANEL LOWER R.H. / WITHOUT HEAD LAMP WASHER From 5-8359	1				
NS	504546	RIVET CHY MONOLOK PRDG 1/4x5/8 ZP	36	36	36	36	
NS	500426	SCREW TP PAN PH #8x1 SS	6	6	6	6	
NS	506769	TAPE RUB ADH2 CC POL 1/8" x 1/4" x 60' / BLACK H1CC-N-#14	AR	AR	AR	AR	
NS	506785	TAPE RUB ADH2 CC POL 1/16" X 1/4" X 200' / BLACK I1C-N-A	AR	AR	AR	AR	
NS	475704	KIT STONE PROTECTOR / VINYL FILM 2x25"x120 + 1x8"x120"	1				
NS	475703	KIT STONE PROTECTOR / VINYL FILM 2x25"x120 + 1x16"x120"		1	1	1	
4	474952	FINISHING MOULDING 1219.5MM	2				
4	474067	FINISHING MOULDING BUS & MTH 83" 1264MM To Y-7128		2	2		
4	474068	FINISHING MOULDING 1340MM MTH 86"		2	2	2	
NS	504339	RIVET POP DOME OE 1/8x3/8 SS	AR	AR	AR	AR	
5	474042	MOULDING SUPPORT 709MM / MTH 86"		1	1	1	
5	474137	MOULDING SUPPORT 645MM / MTH 83" & BUS / S.B. To 6-8906	1				
5	474137	MOULDING SUPPORT 645MM / MTH 83" & BUS / S.B. To 5-8468		1	1		
5	477520	MOULDING SUPPORT 645MM / MTH 83 / B.A. From 5-8469		1	1		
6	474082	DRIP MOULDING OVER ENTRANCE DOOR / S.B. To 6-8906	1				
6	474082	DRIP MOULDING OVER ENTRANCE DOOR / S.B. To 5-8468		1	1	1	
6	477516	DRIP MOULDING OVER ENTRANCE DOOR / B.A. From 5-8469		1	1	1	
7	474106	FINISHING MOULDING ENTRANCE DOOR / 1131MM / S.B. To 6-8906	1				
7	474106	FINISHING MOULDING ENTRANCE DOOR / 1131MM / S.B. To 5-8468		1	1	1	
7	477517	FINISHING MOULDING ENTRANCE DOOR / 1131MM / B.A. From 5-8469		1	1	1	
8	474245	FINISHING MOULDING ENTRANCE DOOR / 1307MM / S.B. To 4-8358	1				
8	477481	FINISHING MOULDING ENTRANCE DOOR / 1304MM / S.B. From 5-8359 To 6-8906	1				
8	474104	FINISHING MOULDING ENTRANCE DOOR / 1383MM MTH83" / S.B. To Y-7128		1	1		
8	474105	FINISHING MOULDING ENTRANCE DOOR / 1459MM MTH86" / S.B. To 4-8358		1	1	1	
8	477477	FINISHING MOULDING ENTRANCE DOOR / 1456MM MTH86" / S.B. From 5-8359 To 5-8468		1	1	1	
8	477514	FINISHING MOULDING ENTRANCE DOOR / 1456MM MTH86" / B.A. From 5-8469		1	1		
8	474569	FINISHING MOULDING ENTRANCE DOOR / 1535MM MTH89" / S.B. To 4-8358				1	
8	477478	FINISHING MOULDING ENTRANCE DOOR / 1531MM MTH89" / S.B. From 5-8359 To 5-8468				1	
8	477522	FINISHING MOULDING ENTRANCE DOOR / 1531MM MTH89" / B.A. From 5-8469				1	
9	473875	PANEL SS / S.B. To 4-8358	2	2	2	2	A
10	474102	FINISHING CENTER SS / S.B. To 4-8358	1				A
10	477473	FINISHING CENTER SS / S.B. To 6-8906	1				A
10	477473	FINISHING CENTER SS / S.B. From 5-8359 To 5-8468		1	1	1	
10	477521	FINISHING CENTER SS / B.A. From 5-8469		1	1	1	
11	473611	MOULDING SS R.H. / S.B. To 6-8906	1				A

From Y-7046 To 8-9339		Date:07/2024	PAGE:Y2-1851-00

FRONT CAP - INSTALLATION

Item#	Part	Description	XLII 45	XLII MTH40	XLII MTH45	XLII MTH45E	NOTES
11	473611	MOULDING SS R.H. / S.B. To 5-8468		1	1	1	
11	477512	MOULDING PLASTIC R.H. / B.A. From 5-8469		1	1	1	
12	473752	MOULDING SS L.H. / S.B. To 6-8906	1				A
12	473752	MOULDING SS L.H. / S.B. To 5-8468		1	1	1	
12	477513	MOULDING PLASTIC L.H. / B.A. From 5-8469		1	1	1	
13	474658	CREST SUPPORT FIBERGLASS To 4-8358	1				
13	474658	CREST SUPPORT FIBERGLASS From Y-7336 To 4-8358		1	1	1	
14	474252	FINISHING MOULDING SERVIR DOOR / 1296MM / S.B. To 4-8358	1				
14	477480	FINISHING MOULDING SERVIR DOOR / 1296MM / S.B. From 5-8359 To 6-8906	1				
14	474247	FINISHING MOULDING SERVIR DOOR / 1373MM MTH83" / S.B. To Y-7128		1	1		
14	474250	FINISHING MOULDING SERVIR DOOR / 1449MM MTH86" / S.B. To 4-8358		1	1	1	
14	477476	FINISHING MOULDING SERVIR DOOR / 1455MM MTH86" / S.B. From 5-8359 To 5-8468		1	1	1	
14	477515	FINISHING MOULDING SERVIR DOOR / 1455MM MTH86" / B.A. From 5-8469		1	1		
14	474251	FINISHING MOULDING SERVIR DOOR / 1525MM MTH89" / S.B. To 4-8358				1	
14	477479	FINISHING MOULDING SERVIR DOOR / 1531MM MTH89" / S.B. From 5-8359 To 5-8468				1	
14	477523	FINISHING MOULDING SERVIR DOOR / 1531MM MTH89" / B.A. From 5-8469				1	
15	286448	DRIP MOULDING "S" BUS & MTH83"	1	1	1		
15	286646	DRIP MOULDING "S" MTH86" & MTH89"		1	1	1	
NS	683083	ADHESIVE SIKA #252 / BLACK / 600 ml SAUSAGE	AR	AR	AR	AR	
NS	683447	ADHESIVE SIKATACK PLUS / BLACK / 23 Liters	AR	AR	AR	AR	
NS	683097	CLEANER SIKA #205 / CLEAR / 1000ml	AR	AR	AR	AR	
NS	681091	PRIMER SIKA #206 / BLACK / 250ml	AR	AR	AR	AR	
NS	790392	RUBBER BLOCK ADJUSTEMENT 1" x 5/16" x 1/8" 80DURO	AR	AR	AR	AR	
16	286454	DRIP MOULDING OVER DRIVER'S WINDOW	1	1	1	1	
17	477470	PANEL SS / CURBSIDE / S.B. To 6-8906	1				A
17	477470	PANEL SS / CURBSIDE / S.B. From 5-8359 To 5-8468		1	1	1	
17	477518	PANEL SS / CURBSIDE / B.A. From 5-8469		1	1	1	
17	477890	PANEL SS / CURBSIDE / B.A.			1		V
18	477469	PANEL SS / STREETSIDE / S.B. To 6-8906	1				A
18	477469	PANEL SS / STREETSIDE / S.B. From 5-8359 To 5-8468		1	1	1	
18	477519	PANEL SS / STREETSIDE / B.A. From 5-8469		1	1	1	
18	477891	PANEL SS / STREETSIDE / B.A.			1		V
20	**Y2-1862-00**	**ENTRANCE DOOR ASSY - BUS**					
20	**Y2-1862-50**	**ENTRANCE DOOR ASSY - MTH**					
21	**Y2-1879-00**	**FRONT SERVICE DOOR ASSY**					
22	**Y2-1855-00**	**RUB RAIL - EXTERIOR CREST & TRIMS**					
NS	373995	KIT, ADAPTOR HEATER HOSE / NEW AIR INLET CURBSIDE / NEW AIR INLET CURBSIDE To 3-8109	1				
. NS	IS-02054	. SEE INSTRUCTION SHEET To 3-8109	1				
NS	373998	KIT, ADAPTOR HEATER HOSE / NEW AIR INLET STREET SIDE / NEW AIR INLET STREETSIDE To 3-8109	1				
. NS	IS-02086	. SEE INSTRUCTION SHEET To 3-8109	1				
NS	374011	KIT, ADAPTOR HEATER HOSE / NEW AIR INLET CURBSIDE / NEW AIR INLET CURBSIDE To 3-8109		1	1	1	
. NS	IS-02113	. SEE INSTRUCTION SHEET To 3-8109		1	1	1	

From Y-7046 To 8-9339		Date:07/2024	PAGE:Y2-1851-00

FRONT CAP - INSTALLATION

Item#	Part	Description	XLII 45	XLII MTH40	XLII MTH45	XLII MTH45E	NOTES
		A) COACH WITH STAINLESS STEEL SIDE LOWER PANELLING					
		B) WITHOUT UPPER SIDE GLASS					
		V) WITH "VORAD" SYSTEM					

From Y-7046 To 8-9339		Date:07/2024	PAGE:Y2-1851-20
REAR CAP - INSTALLATION			

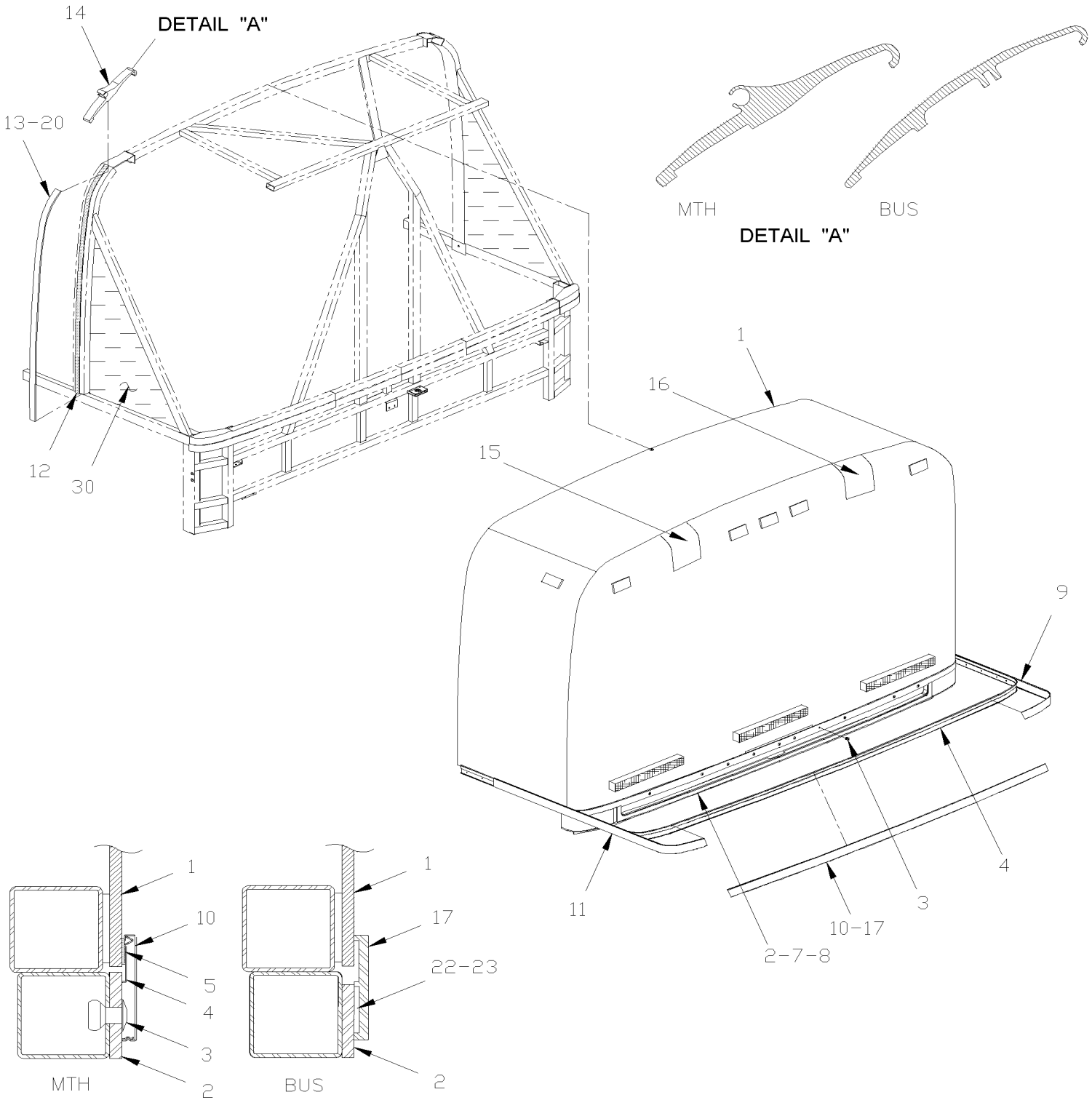

From Y-7046 To 8-9339		Date:07/2024	PAGE:Y2-1851-20

REAR CAP - INSTALLATION

Item#	Part	Description	XLII 45	XLII MTH40	XLII MTH45	XLII MTH45E	NOTES
1	473626	REAR CAP ASSY / BUS & MTH 83" To 6-8906	1				
1	473652	REAR CAP ASSY / MTH 83" To Y-7128		1			
1	473654	REAR CAP ASSY / MTH 86"		1			
1	474632	REAR CAP ASSY / MTH 86" W/BUCKET CAMERA		1			
1	473653	REAR CAP ASSY / MTH 86"			1		
1	475073	REAR CAP ASSY / MTH 86" W/BUCKET CAMERA			1		
1	473626	REAR CAP ASSY / BUS & MTH 83" To 6-8906			1		
1	473653	REAR CAP ASSY / MTH 86"				1	
1	473655	REAR CAP ASSY / MTH 89"				1	
1	474943	REAR CAP ASSY / MTH 89" WITH SATELITE				1	
2	473822	MOULDING FIBER GLASS "Z SHAPE" To 6-8906	1				
2	473768	AIR INTAKE / W/MTH 83" & MTH-86" To 8-9347		1	1	1	
2	479253	AIR INTAKE / W/MTH-86" From 8-9348			1		
2	473953	AIR INTAKE / W/MTH-89"				1	
3	504416	RIVET POP DOME OE 3/16x5/8 SS	12	12	12	12	
4	473895	MOULDING RETAINER / 2250MM	1	1	1	1	
5	506225	TAPE RUB ADH1 CC POL 1/16" x 1/4" x 100' / GREY 2520	AR	AR	AR	AR	
7	504340	RIVET POP DOME OE 1/8x3/16 SS	10	10	10	10	
8	500353	SCREW TP FL PH #8x3/4 BK	6	6	6	6	
9	473831	MOULDING RIGHT CORNER		1	1	1	
10	473896	FINISHING MOULDING SS / 2125MM		1	1	1	
11	473833	MOULDING LEFT CORNER		1	1	1	
12	293135	RUBBER SEAL 1315MM / W/83"	2	2	2		
12	293136	RUBBER SEAL 1391MM W/86" & 89"		2	2	2	
13	474067	FINISHING MOULDING BUS & MTH 83" 1264MM	2	2	2		
13	474068	FINISHING MOULDING 1340MM MTH 86"		2	2	2	
13	474069	FINISHING MOULDING 1417MM MTH 89"				2	
14	293256	UPPER EXTRUSION 38MM To 4-8270	2				
14	293712	UPPER EXTRUSION 38MM From 4-8271 To 6-8906	2				
14	293230	UPPER EXTRUSION 38MM To 4-8270		2	2	2	
14	293715	UPPER EXTRUSION 38MM From 4-8271		2	2	2	
15	475144	REAR CAP DRIP COVER L.H. / W/89"				1	
16	475145	REAR CAP DRIP COVER R.H. / W/89"				1	
17	474359	FINISHING MOULDING PLASTIC 2800MM	1			1	A
. NS	506785	. TAPE RUB ADH2 CC POL 1/16" X 1/4" X 200' / BLACK I1C-N-A	AR			AR	A
. NS	506769	. TAPE RUB ADH2 CC POL 1/8" x 1/4" x 60' / BLACK H1CC-N-#14	AR			AR	A
20	506759	TAPE RUB ADH2 CC POL 1/8" x 1/2" x 100' / BLACK I1C-N-A	AR	AR	AR	AR	
22	683446	PRIMER SIKA #206 / BLACK / 1000ml	AR	AR	AR	AR	
22	683448	ACCELERATOR SIKA / 600ml SAUSAGE	AR	AR	AR	AR	
22	683084	SEALANT SIKA #221 / GREY / 600 ml SAUSAGE	AR	AR	AR	AR	
23	683447	ADHESIVE SIKATACK PLUS / BLACK / 23 Liters	AR	AR	AR	AR	
23	683083	ADHESIVE SIKA #252 / BLACK / 600 ml SAUSAGE	AR	AR	AR	AR	

From Y-7046 To 8-9339		Date:07/2024	PAGE:Y2-1851-20

REAR CAP - INSTALLATION

Item#	Part	Description	XLII 45	XLII MTH40	XLII MTH45	XLII MTH45E	NOTES
23	683916	PRIMER SIKA #215 / CLEAR / 1000ml	AR	AR	AR	AR	
23	683097	CLEANER SIKA #205 / CLEAR / 1000ml	AR	AR	AR	AR	
30	**Y2-1839-70**	**INSULATING REAR END INSIDE OVER ENGINE**					
		A) MTH 45E WITH FLAT SIDE PANELING					

From Y-7046 To 8-9339		Date:07/2024	PAGE:Y2-1852-00
ROOF PANEL			

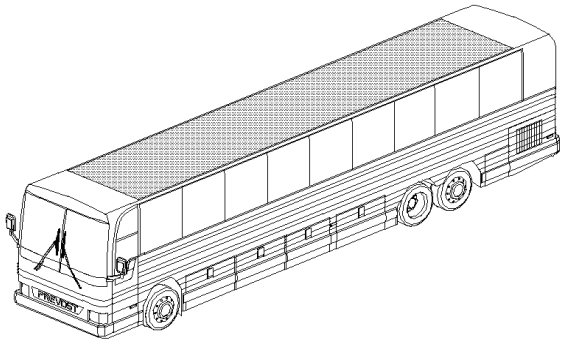

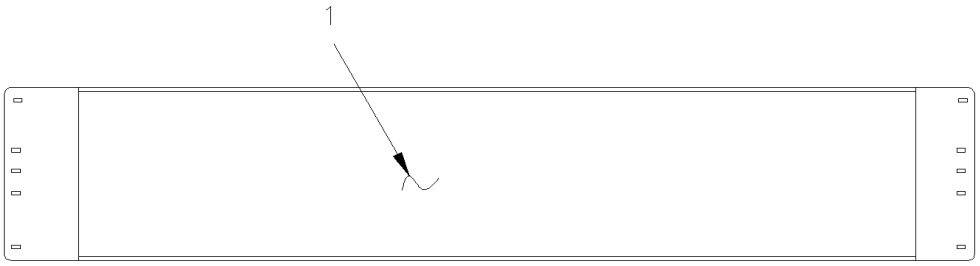

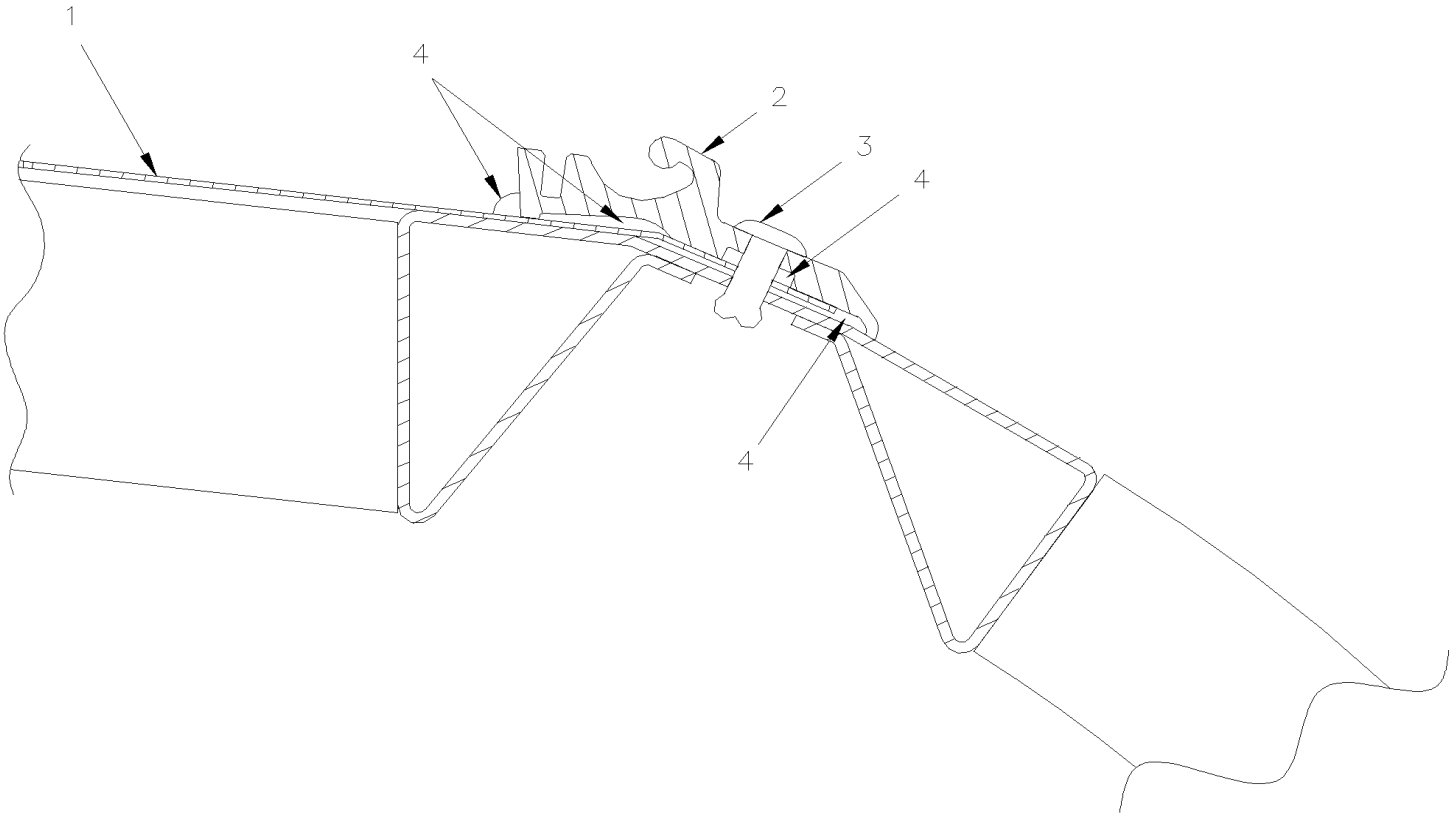

From Y-7046 To 8-9339		Date:07/2024	PAGE:Y2-1852-00

ROOF PANEL

Item#	Part	Description	XLII 45	XLII MTH40	XLII MTH45	XLII MTH45E	NOTES
1	970268	ALUMINUM SHEET 3003 WHITE 18GAX82 1/4" To Y-7194	165	165	165	165	
1	970274	ALUMINUM SHEET 3003 WHITE 18GAX82 1/4" From Y-7195	165	165	165	165	
2	293182	EXTRUSION, ALUMINUM 5220MM (205.5")		4			
2	293181	EXTRUSION, ALUMINUM 5870MM (231.1")	4		4	4	
3	504546	RIVET CHY MONOLOK PRDG 1/4x5/8 ZP	AR	AR	AR	AR	
3	504545	RIVET CHY MONOLOK PRDG 1/4x3/8 ZP	50	50	50	50	A
4	680532	SEALANT SIKA #221 / GREY / 310ml CARTRIDGE	AR	AR	AR	AR	
4	682462	ADHESIVE SIKA #252 / BLACK / 310ml CARTRIDGE	AR	AR	AR	AR	
5	474057P	KIT, ROOF PANELING XL SERIES	1	1	1	1	
		A) EACH END					

From Y-7046 To 8-9339		Date:07/2024	PAGE:Y2-1853-50
JIG TOOL - SIDE PANELING INSTALLATION			

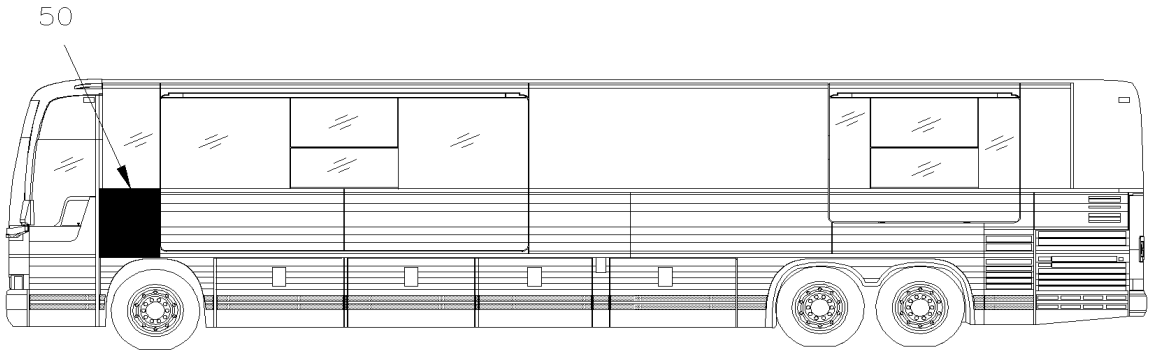

MTH. 45' WITH "SLIDE-OUT"

KIT # 1	TO FIX THIS PANEL YOUR REQUIRE ALL ITEMS SHOWN ON THIS PAGE

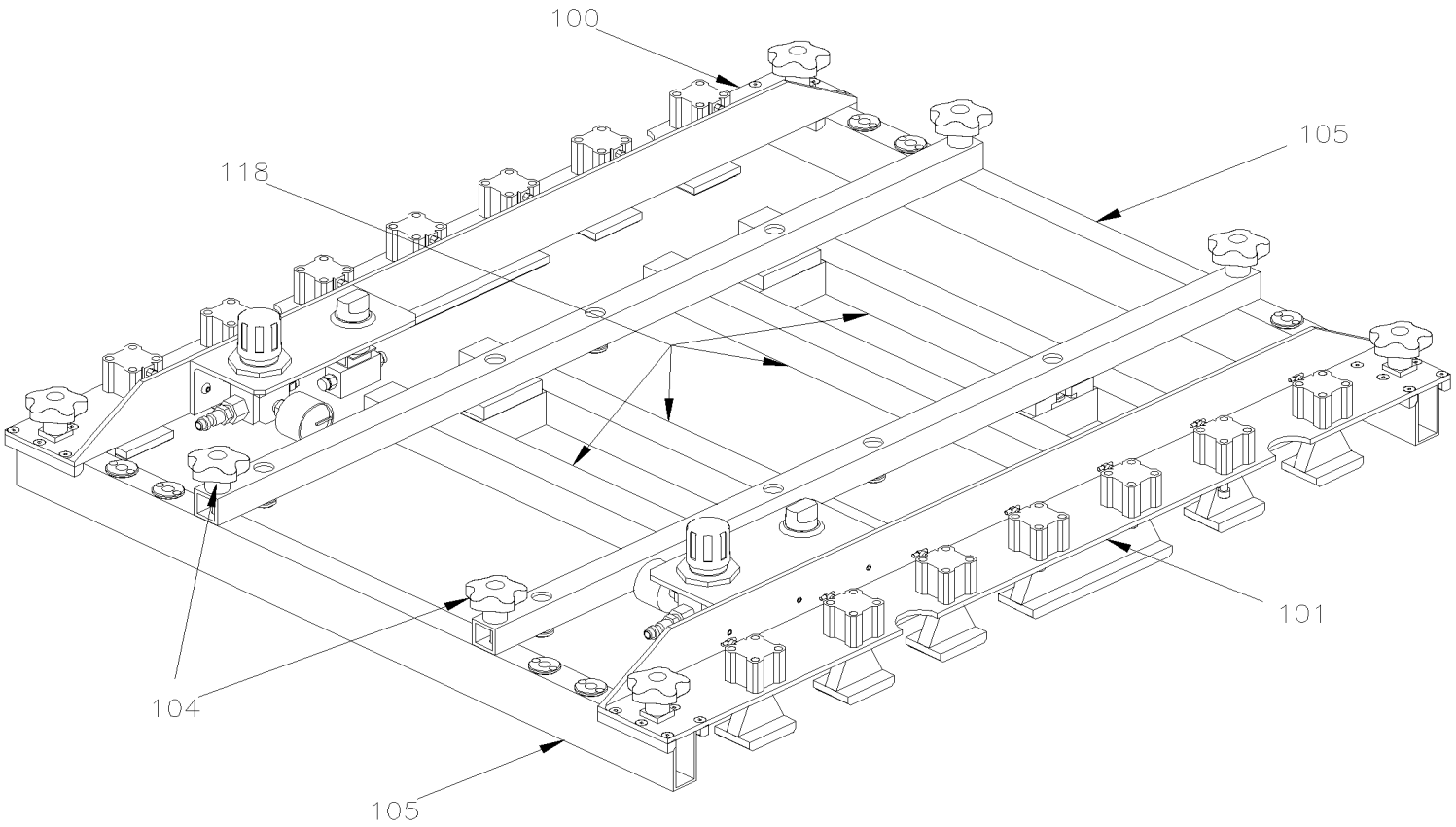

From Y-7046 To 8-9339		Date:07/2024	PAGE:Y2-1853-50
JIG TOOL - SIDE PANELING INSTALLATION			

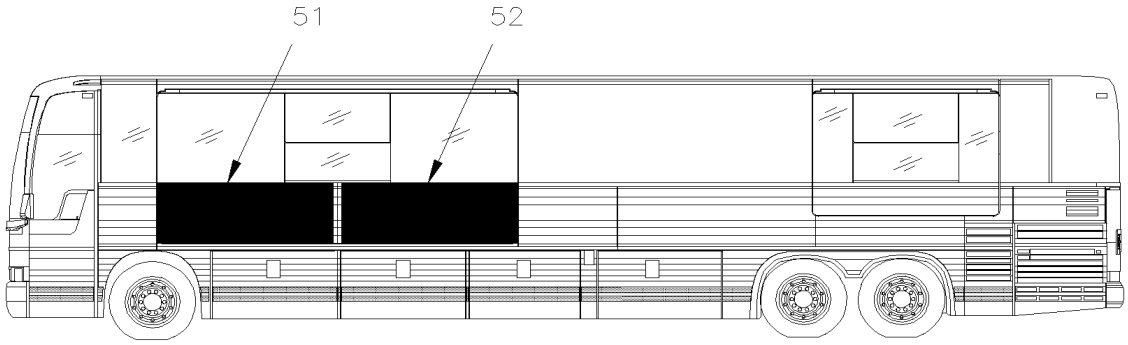

MTH. 45' WITH "SLIDE-OUT"

KIT # 2	TO FIX THIS PANEL YOUR REQUIRE ALL ITEMS SHOWN ON THIS PAGE

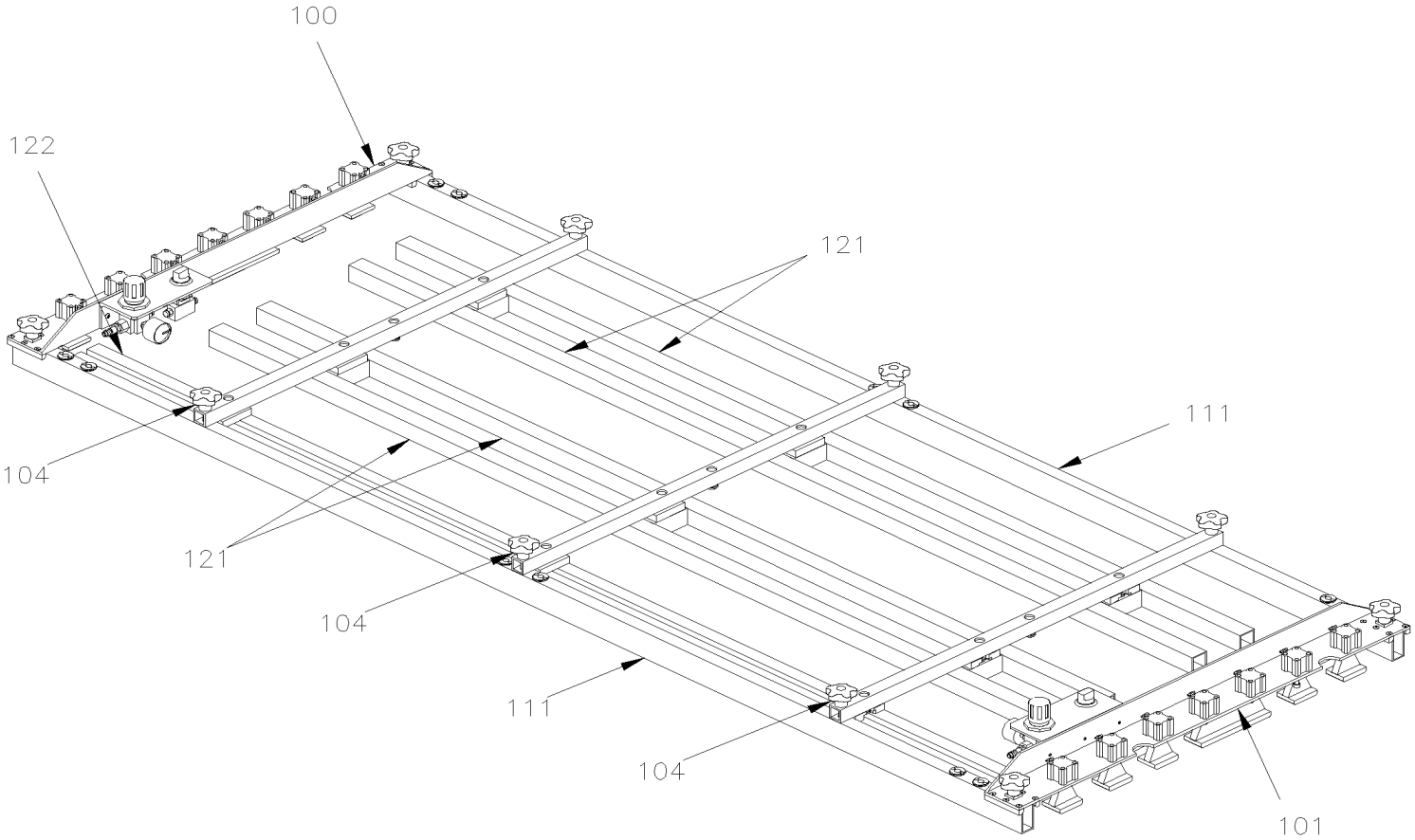

From Y-7046 To 8-9339		Date:07/2024	PAGE:Y2-1853-50
JIG TOOL - SIDE PANELING INSTALLATION			

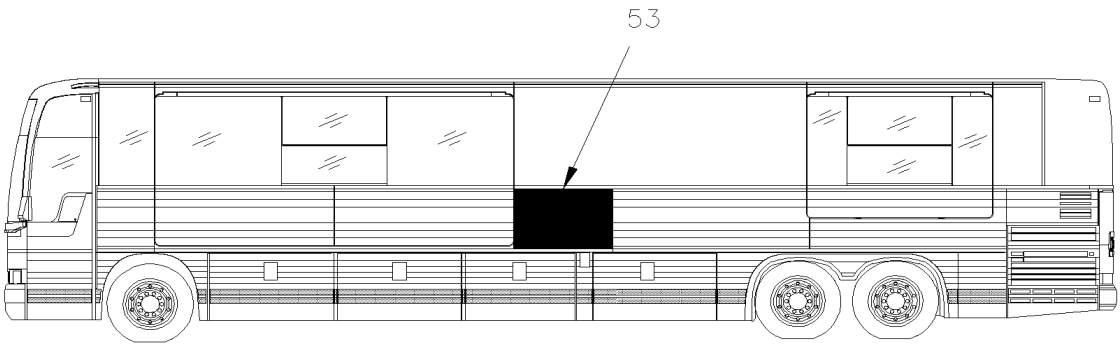

MTH. 45' WITH "SLIDE-OUT"

KIT # 3	TO FIX THIS PANEL YOUR REQUIRE ALL ITEMS SHOWN ON THIS PAGE

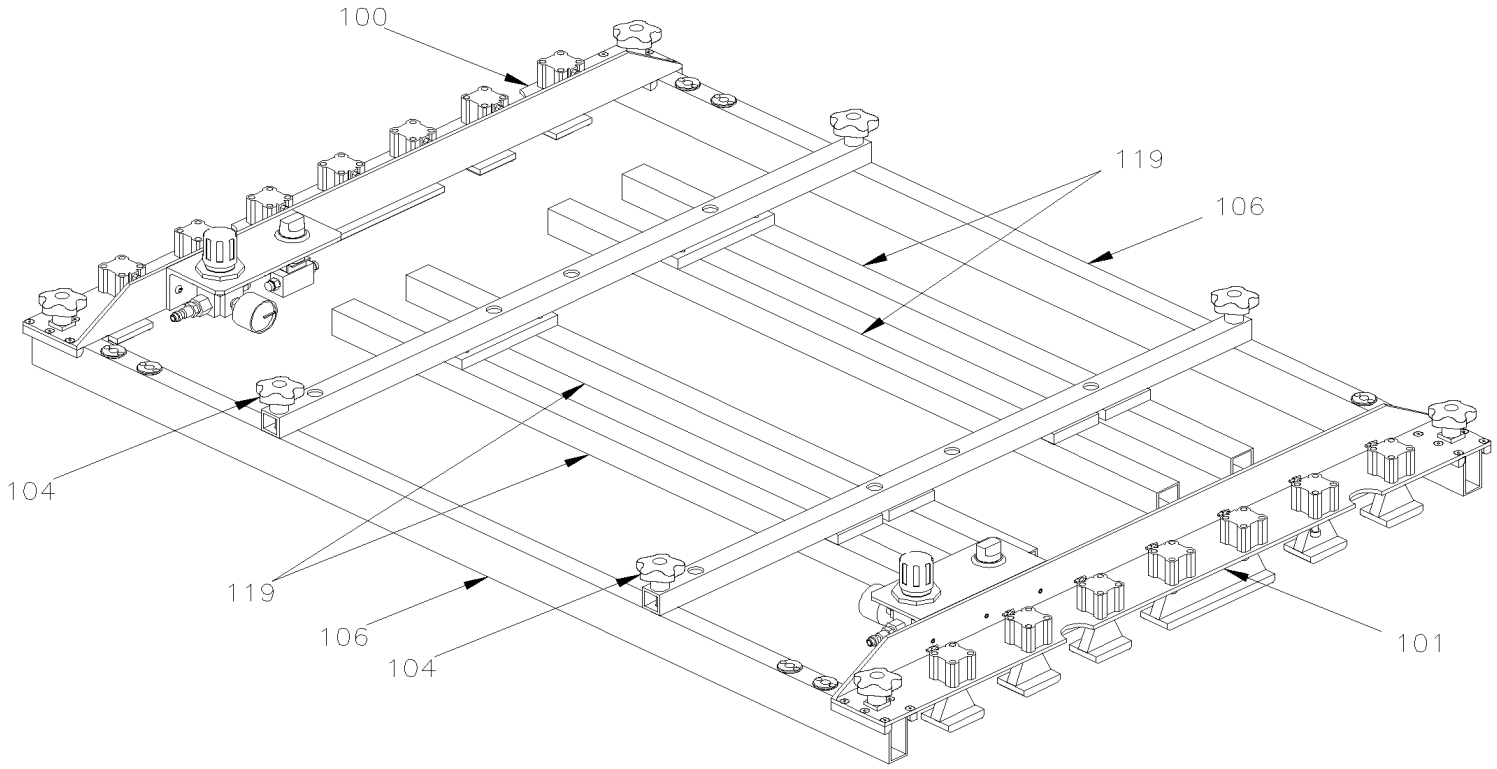

From Y-7046 To 8-9339		Date:07/2024	PAGE:Y2-1853-50
JIG TOOL - SIDE PANELING INSTALLATION			

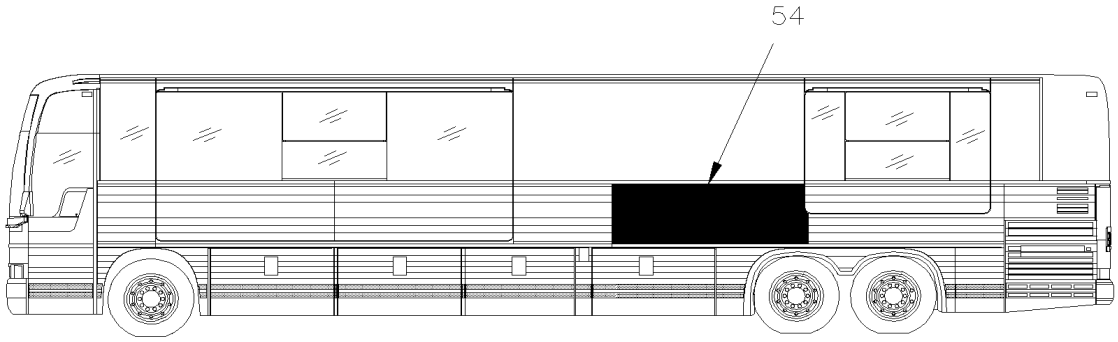

MTH. 45' WITH "SLIDE-OUT"

KIT # 4	TO FIX THIS PANEL YOUR REQUIRE ALL ITEMS SHOWN ON THIS PAGE

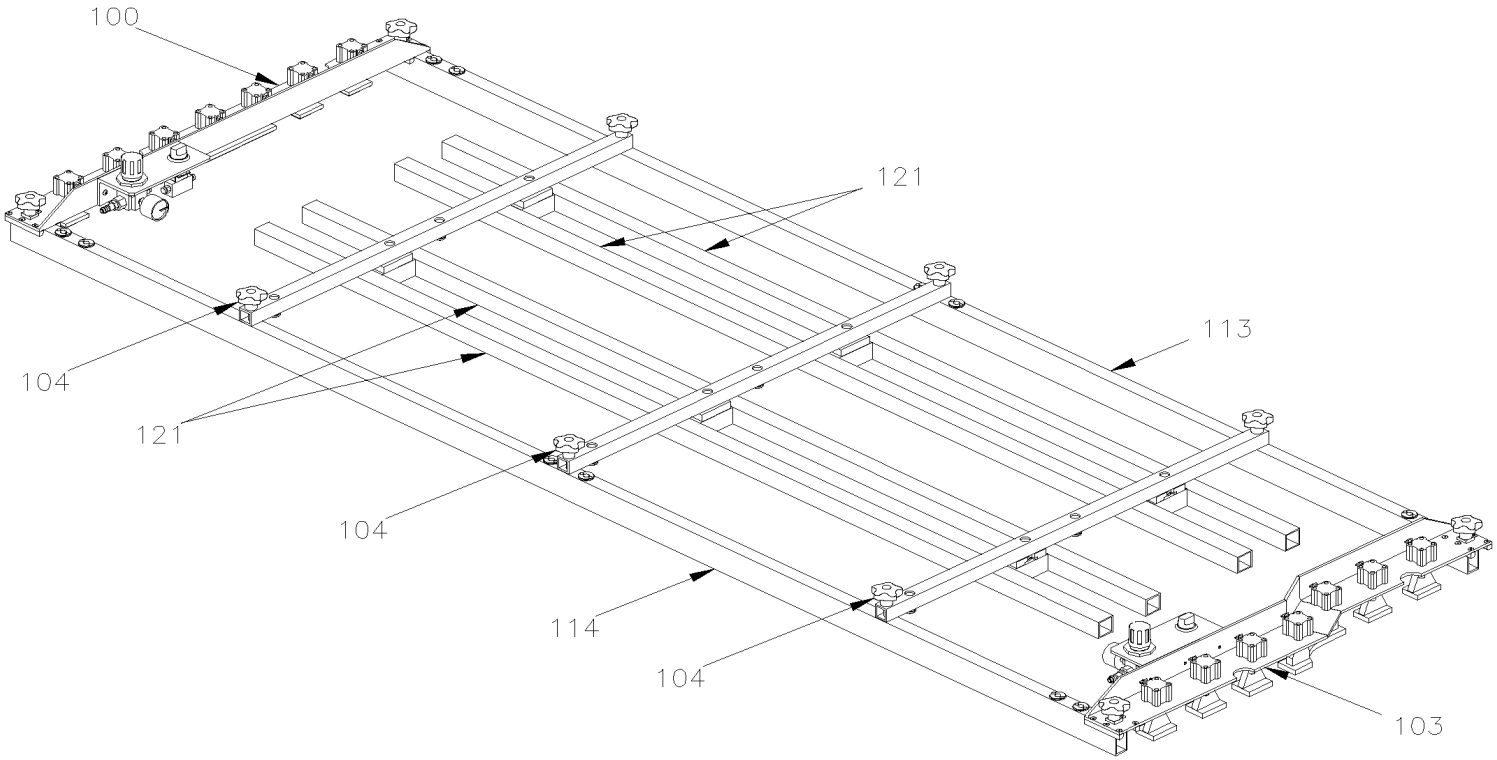

From Y-7046 To 8-9339		Date:07/2024	PAGE:Y2-1853-50
JIG TOOL - SIDE PANELING INSTALLATION			

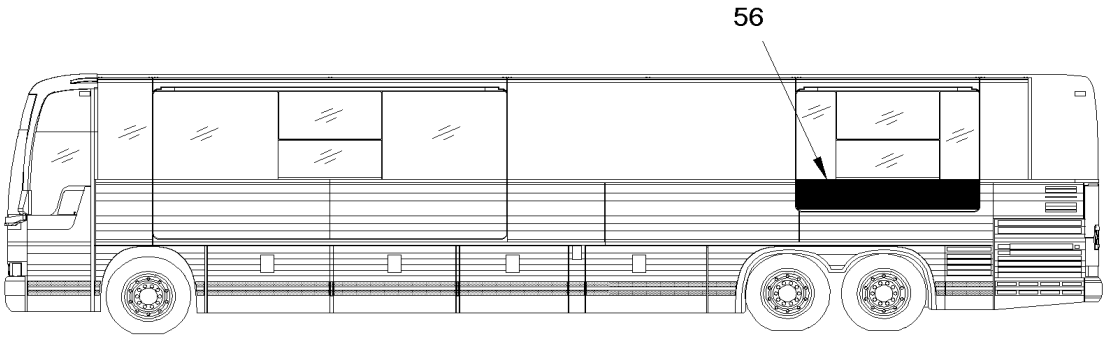

MTH. 45' WITH "SLIDE-OUT"
UP TO 3-8164

KIT # 5	TO FIX THIS PANEL YOUR REQUIRE ALL ITEMS SHOWN ON THIS PAGE

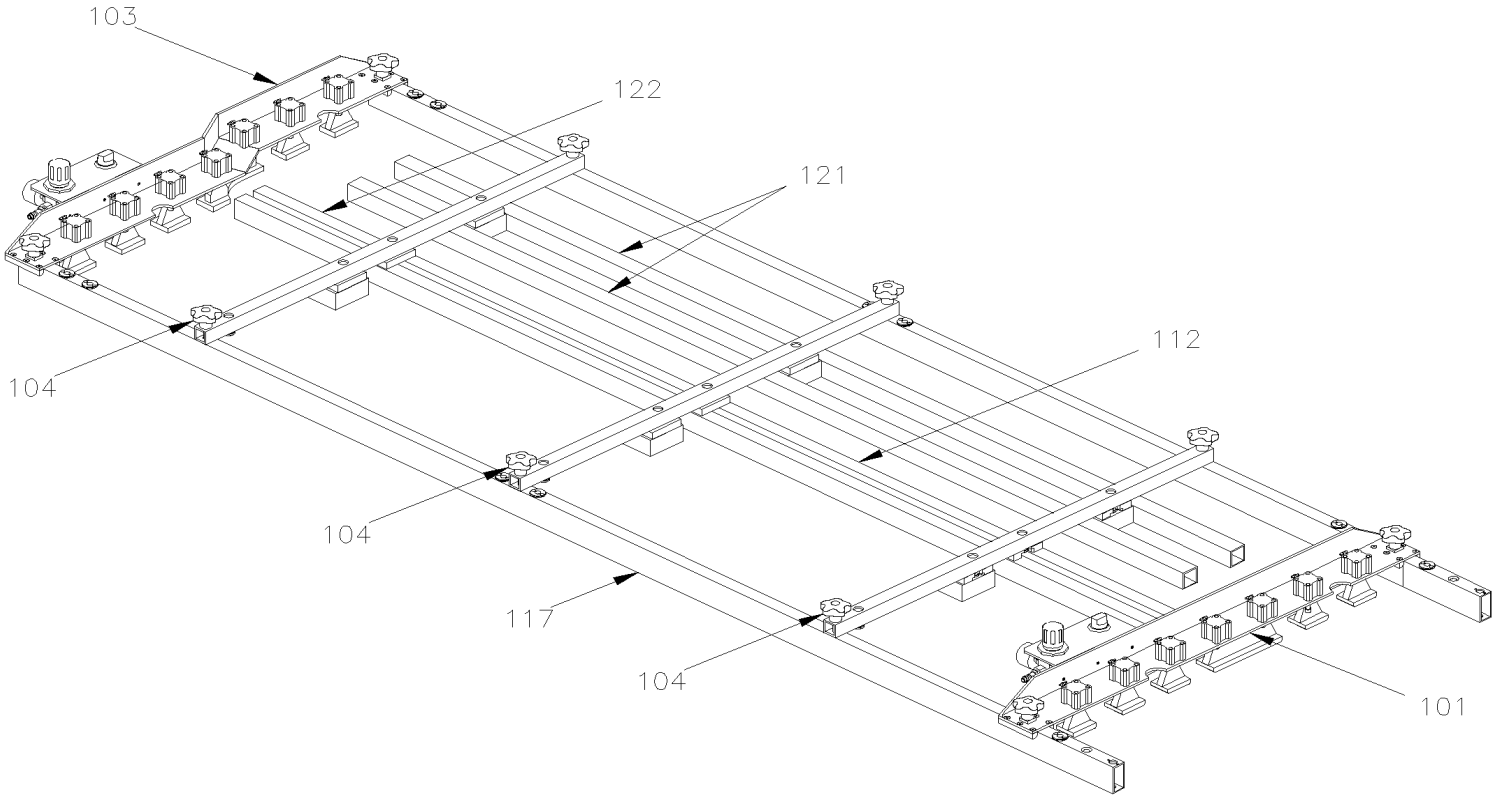

From Y-7046 To 8-9339		Date:07/2024	PAGE:Y2-1853-50
JIG TOOL - SIDE PANELING INSTALLATION			

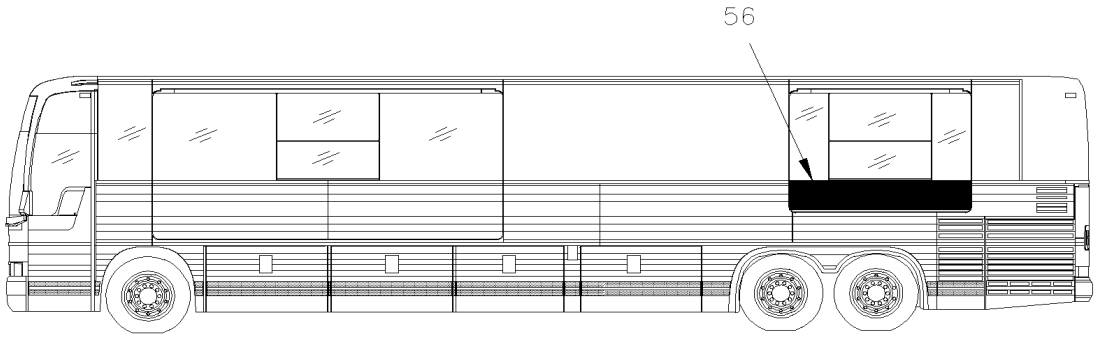

MTH. 45' WITH "SLIDE-OUT"
FROM 4-8165

KIT # 6	TO FIX THIS PANEL YOUR REQUIRE ALL ITEMS SHOWN ON THIS PAGE

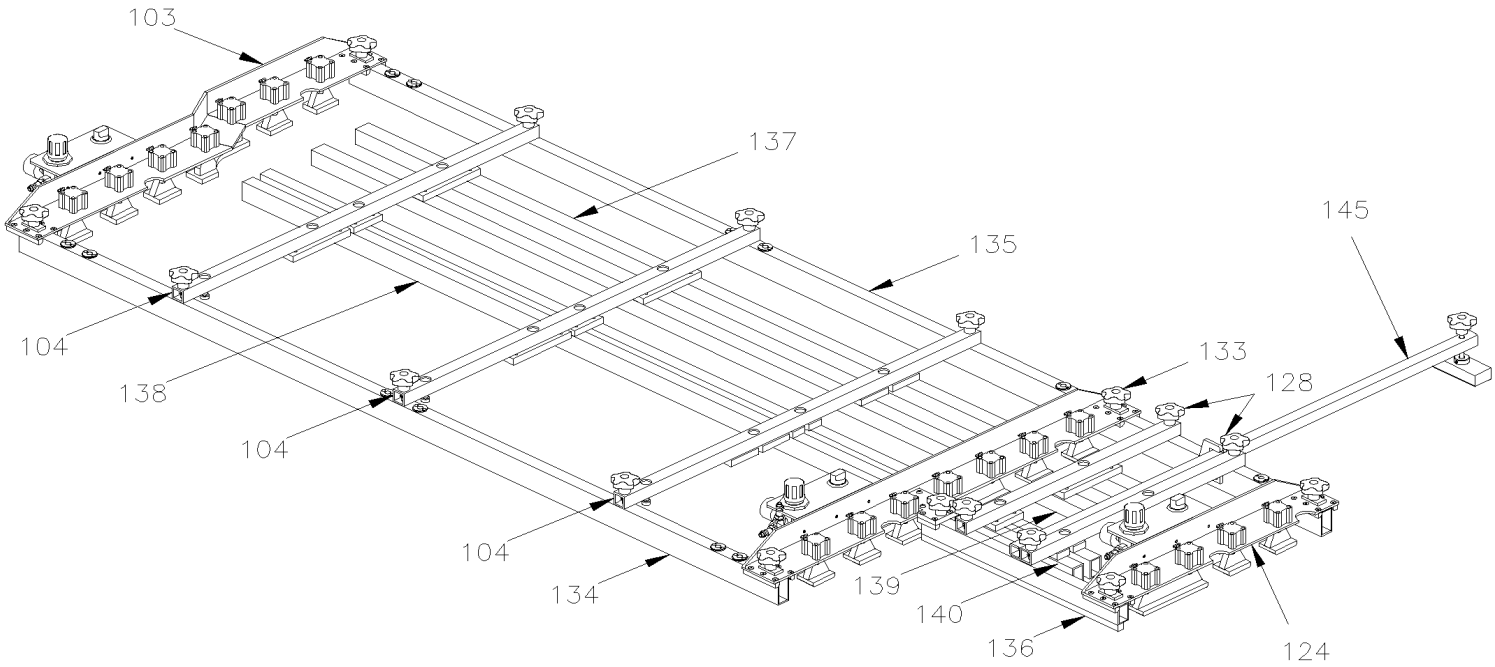

From Y-7046 To 8-9339		Date:07/2024	PAGE:Y2-1853-50
JIG TOOL - SIDE PANELING INSTALLATION			

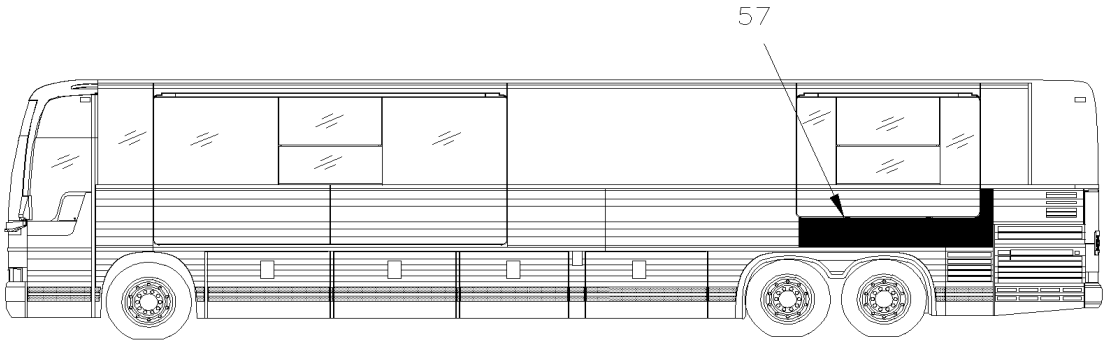

MTH. 45' WITH "SLIDE-OUT"
UP TO 3-8164

KIT # 7	TO FIX THIS PANEL YOUR REQUIRE ALL ITEMS SHOWN ON THIS PAGE

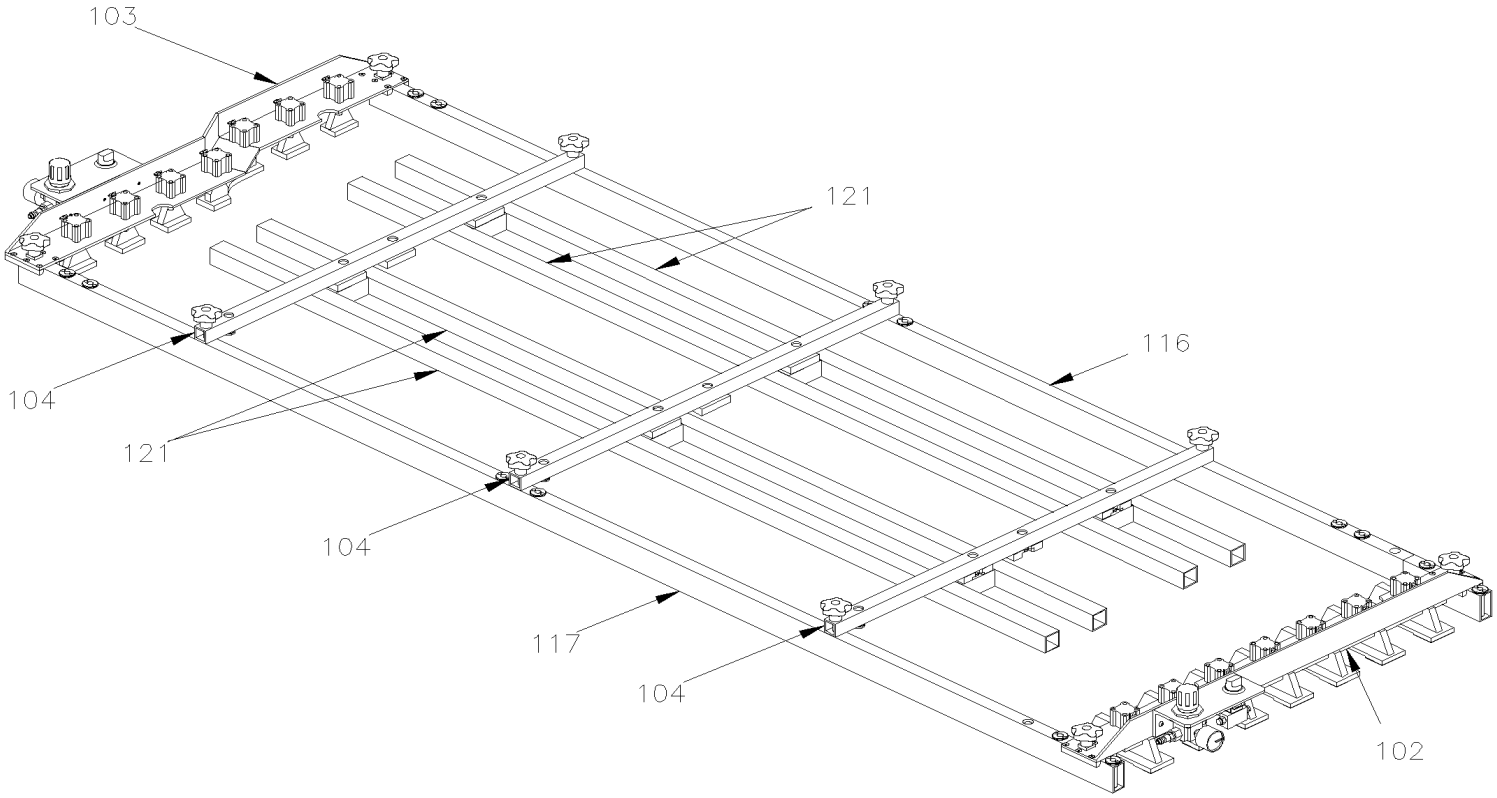

From Y-7046 To 8-9339		Date:07/2024	PAGE:Y2-1853-50
JIG TOOL - SIDE PANELING INSTALLATION			

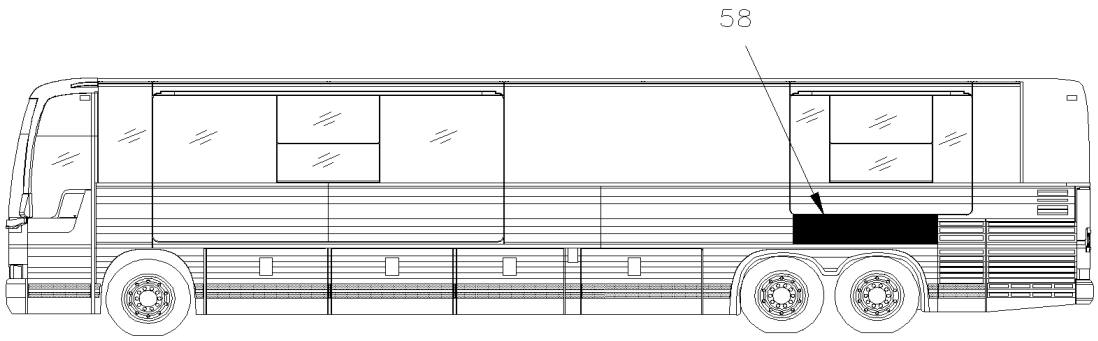

MTH. 45' WITH ''SLIDE-OUT''
FROM 4-8165

KIT # 8	TO FIX THIS PANEL YOUR REQUIRE ALL ITEMS SHOWN ON THIS PAGE

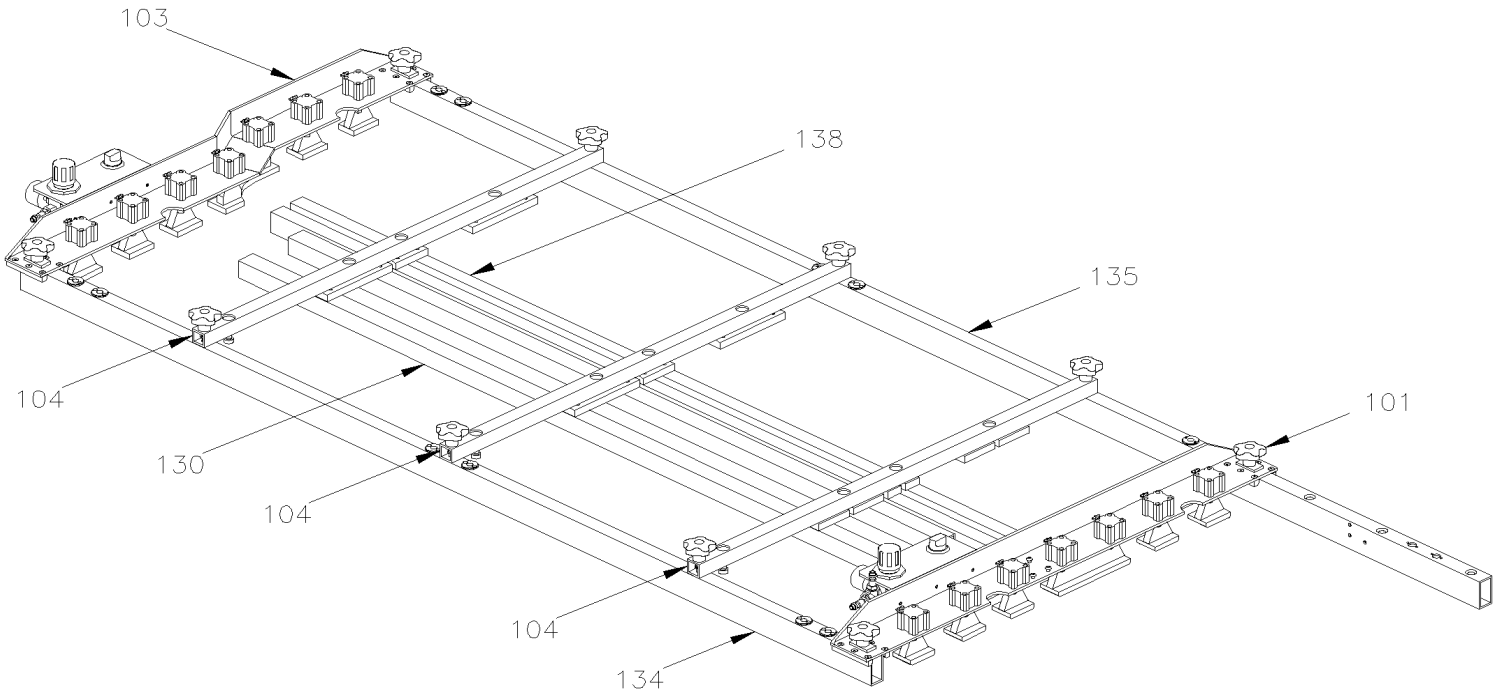

From Y-7046 To 8-9339		Date:07/2024	PAGE:Y2-1853-50
JIG TOOL - SIDE PANELING INSTALLATION			

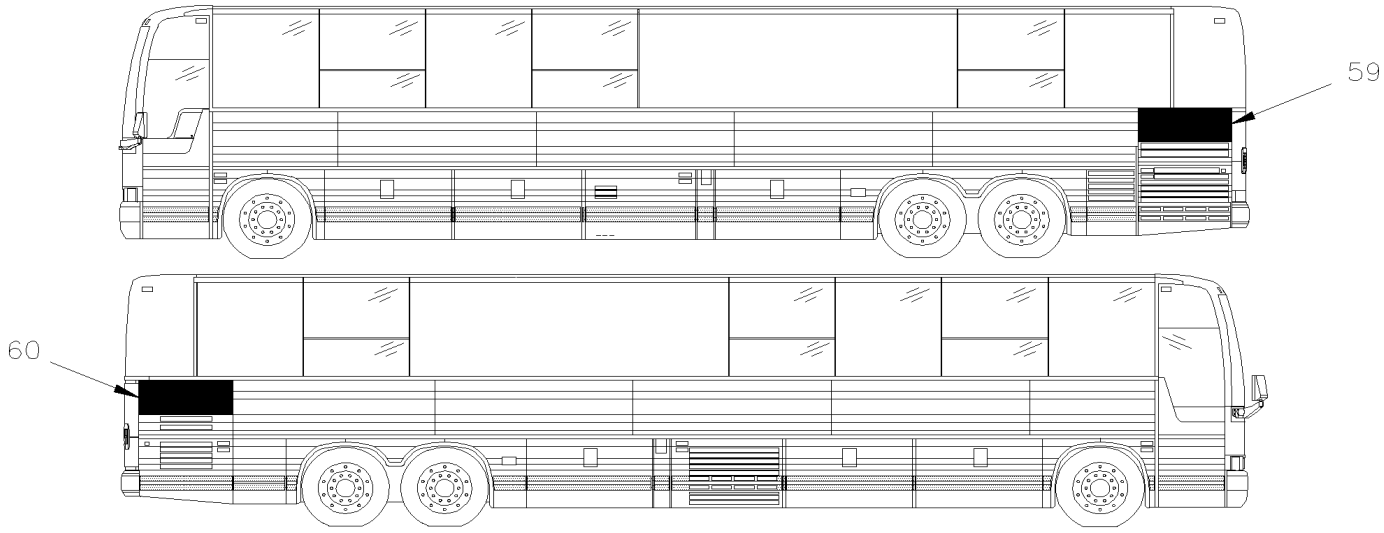

MTH. 45'

KIT # 9	TO FIX THIS PANEL YOUR REQUIRE ALL ITEMS SHOWN ON THIS PAGE

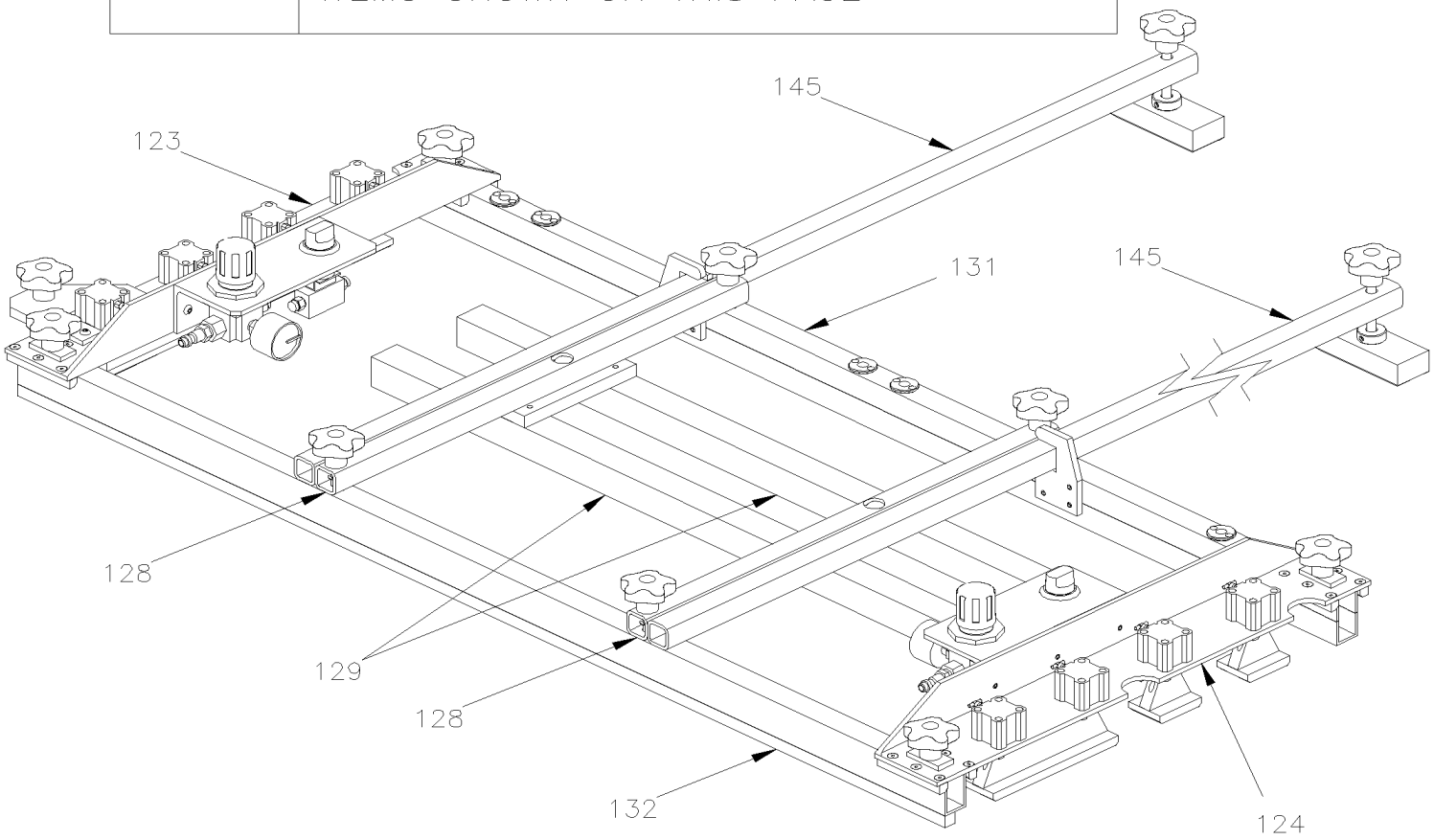

From Y-7046 To 8-9339		Date:07/2024	PAGE:Y2-1853-50
JIG TOOL - SIDE PANELING INSTALLATION			

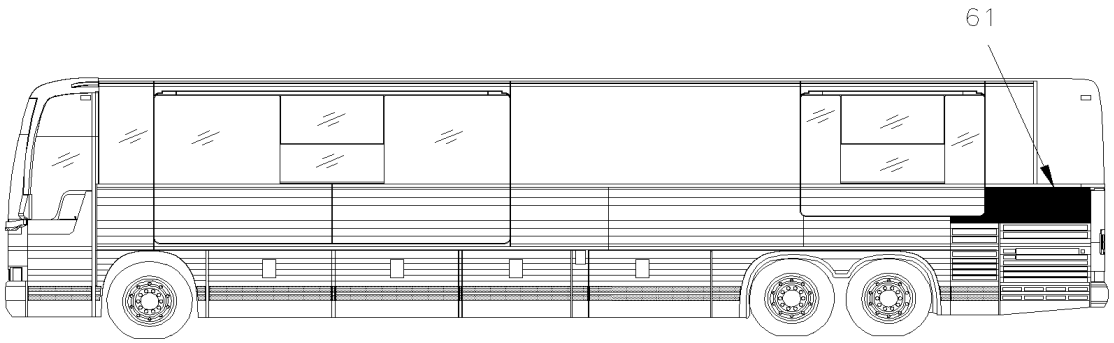

MTH. 45' WITH "SLIDE-OUT"
FROM 4-8165

KIT # 10	TO FIX THIS PANEL YOUR REQUIRE ALL ITEMS SHOWN ON THIS PAGE

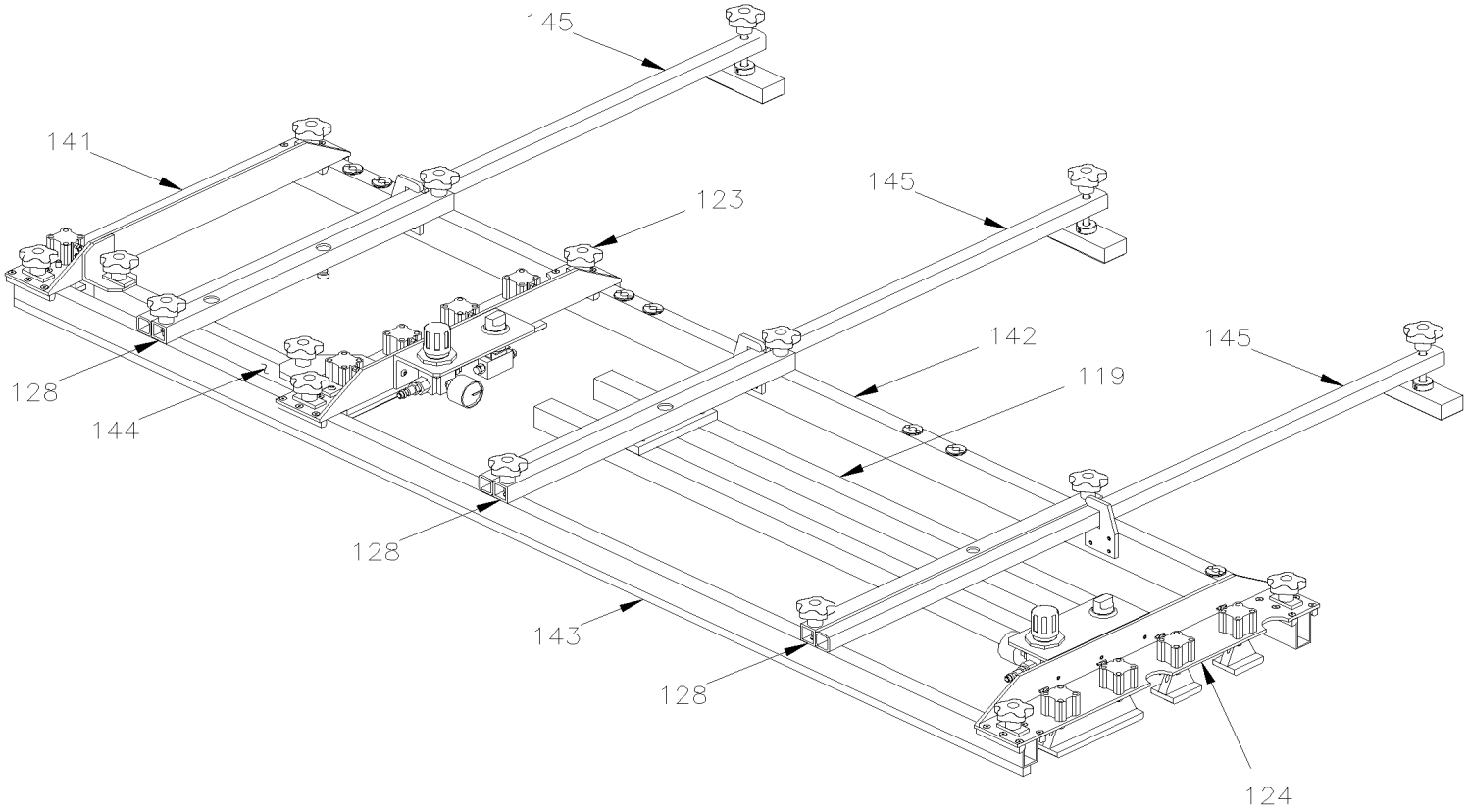

From Y-7046 To 8-9339		Date:07/2024	PAGE:Y2-1853-50
JIG TOOL - SIDE PANELING INSTALLATION			

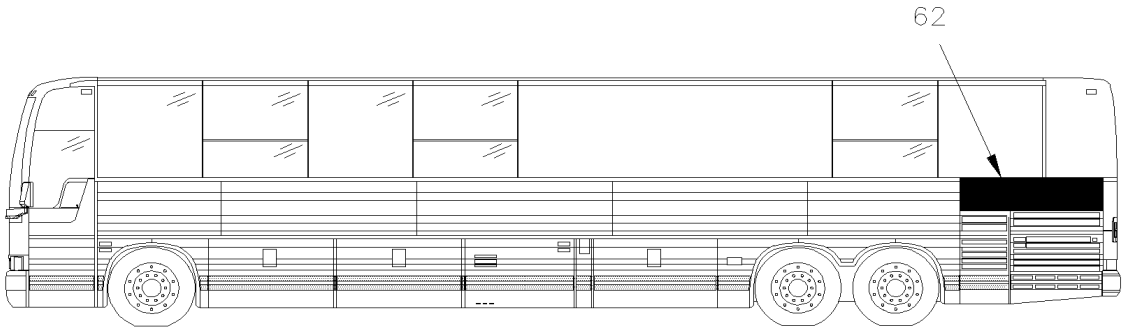

MTH. 45'

FROM 4-8165

KIT # 11	TO FIX THIS PANEL YOUR REQUIRE ALL ITEMS SHOWN ON THIS PAGE

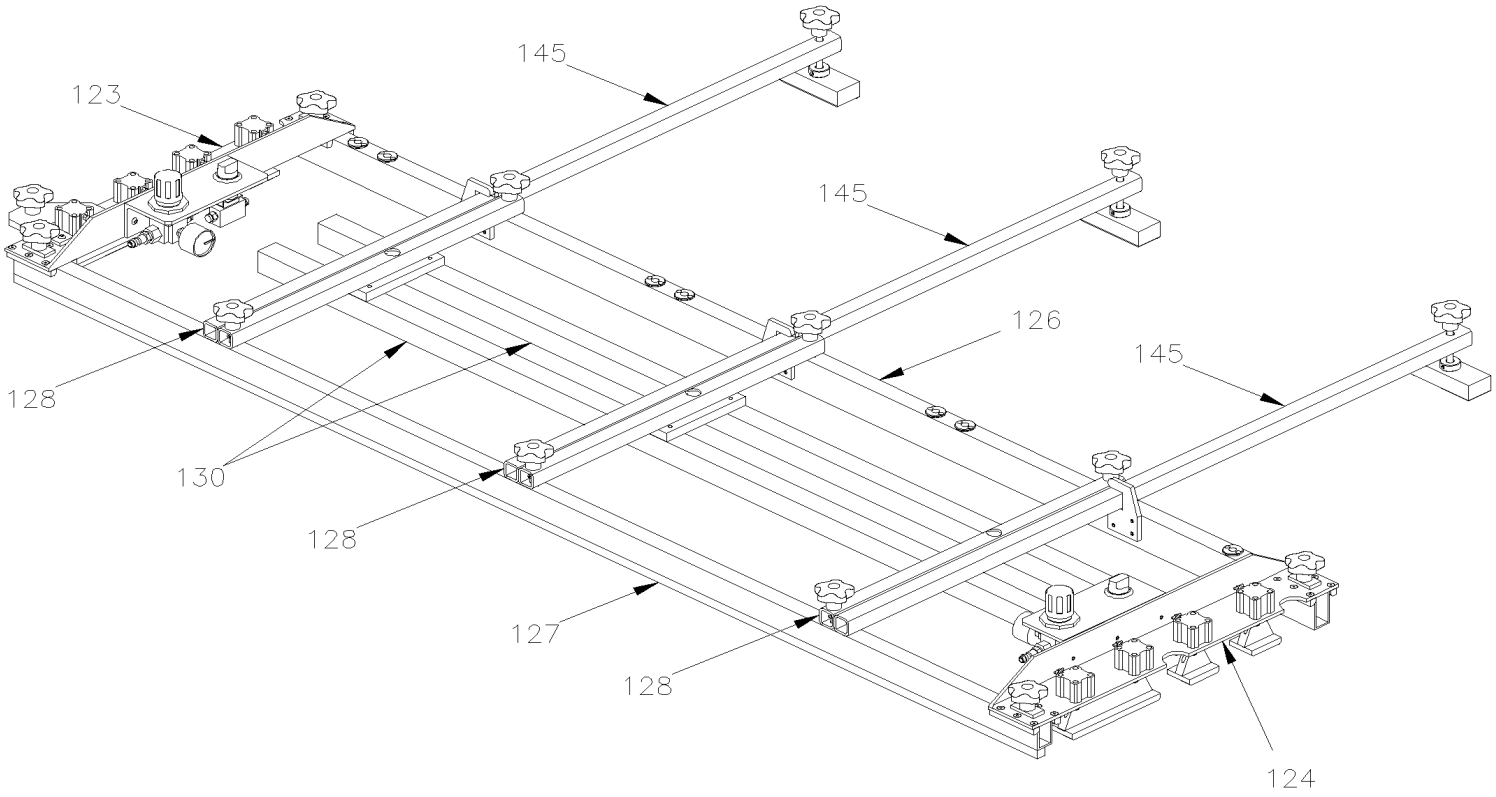

From Y-7046 To 8-9339		Date:07/2024	PAGE:Y2-1853-50
JIG TOOL - SIDE PANELING INSTALLATION			

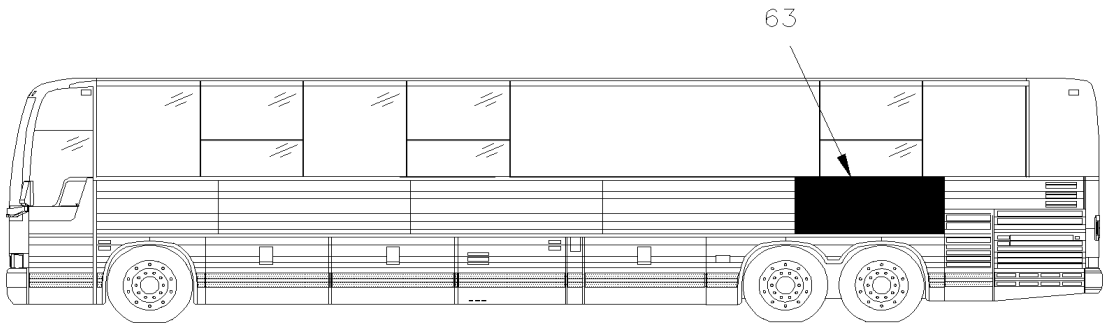

MTH. 45'
FROM 4–8165

KIT # 12	TO FIX THIS PANEL YOUR REQUIRE ALL ITEMS SHOWN ON THIS PAGE

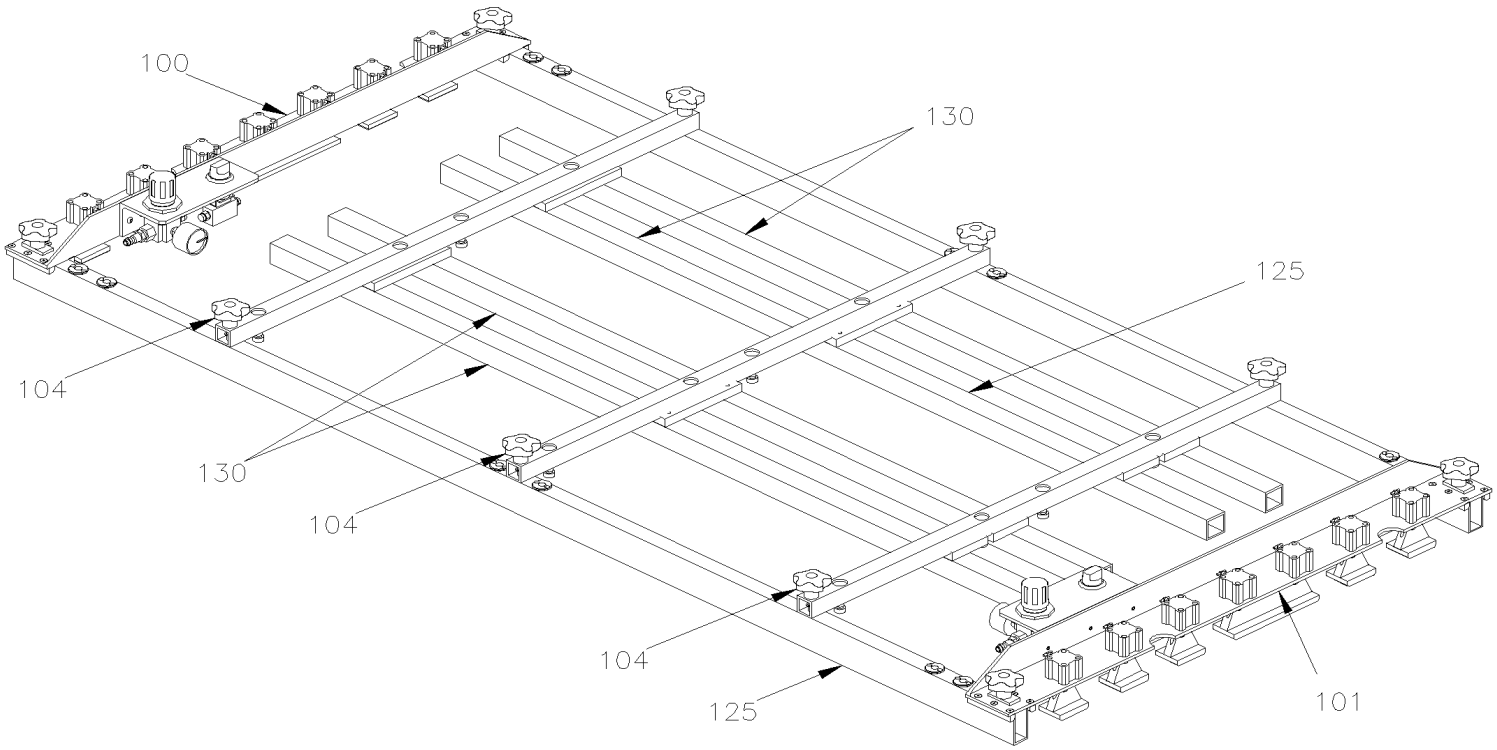

From Y-7046 To 8-9339		Date:07/2024	PAGE:Y2-1853-50
JIG TOOL - SIDE PANELING INSTALLATION			

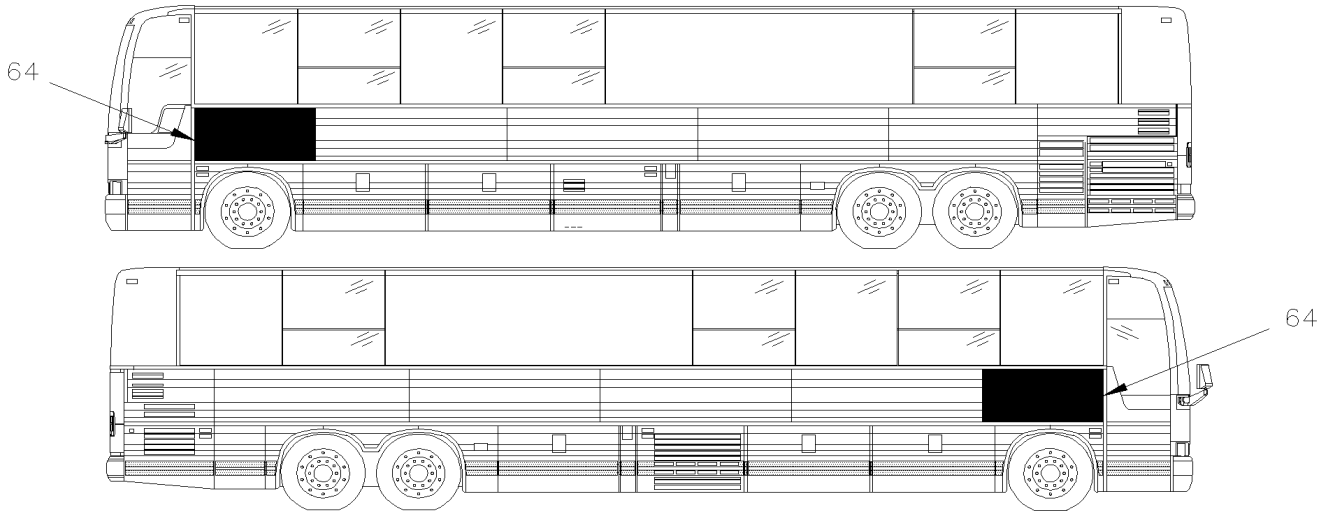

MTH. 45' & MTH 45' ENT WITH ''OPTION''

KIT # 13	TO FIX THIS PANEL YOUR REQUIRE ALL ITEMS SHOWN ON THIS PAGE

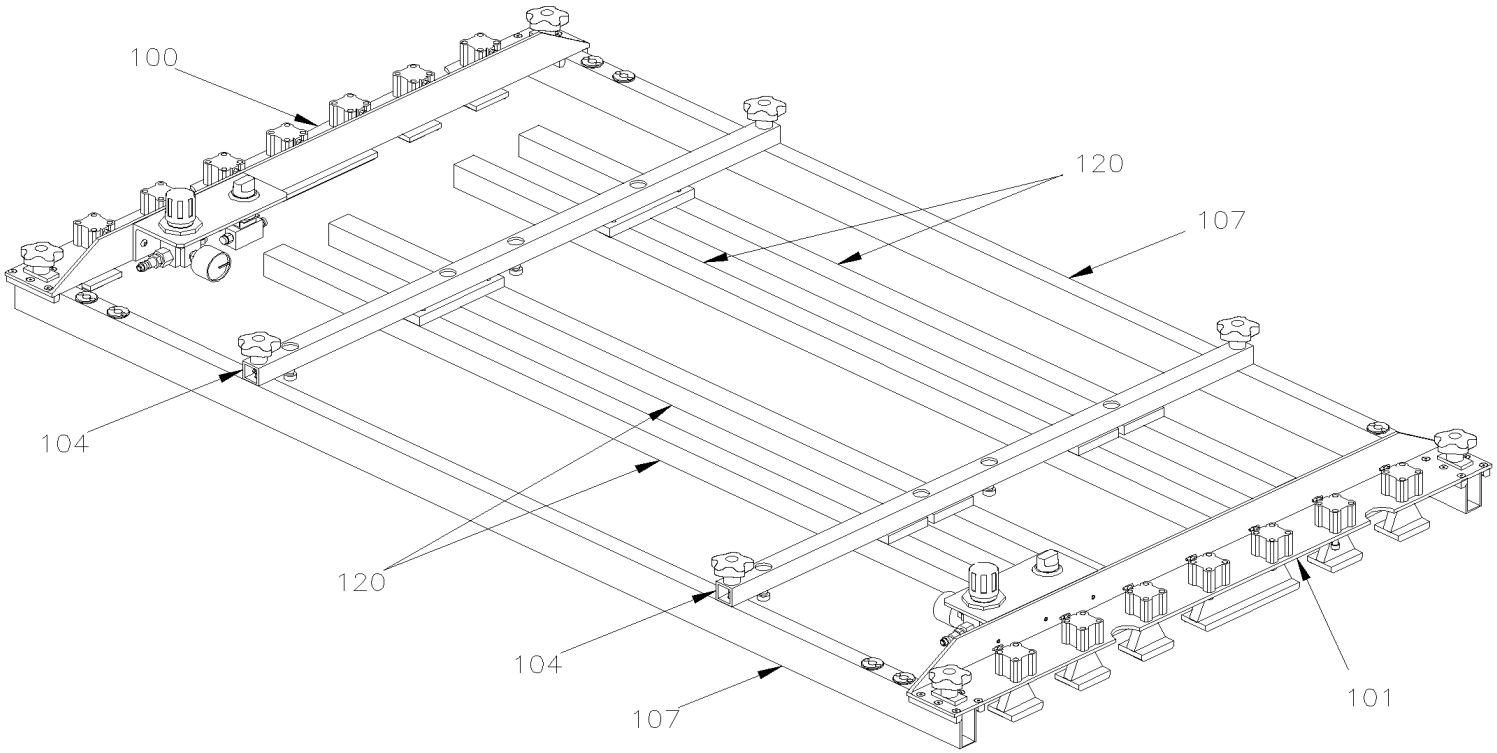

From Y-7046 To 8-9339		Date:07/2024	PAGE:Y2-1853-50
JIG TOOL - SIDE PANELING INSTALLATION			

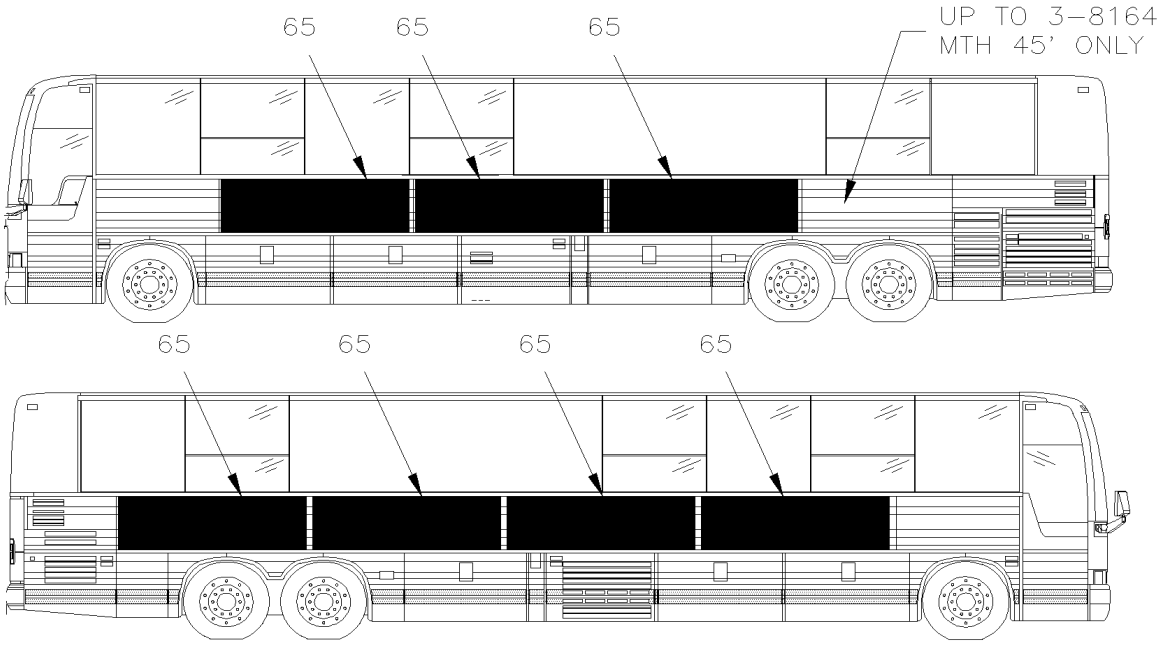

MTH. 40' & MTH 45' ENT

KIT # 14	TO FIX THIS PANEL YOUR REQUIRE ALL ITEMS SHOWN ON THIS PAGE

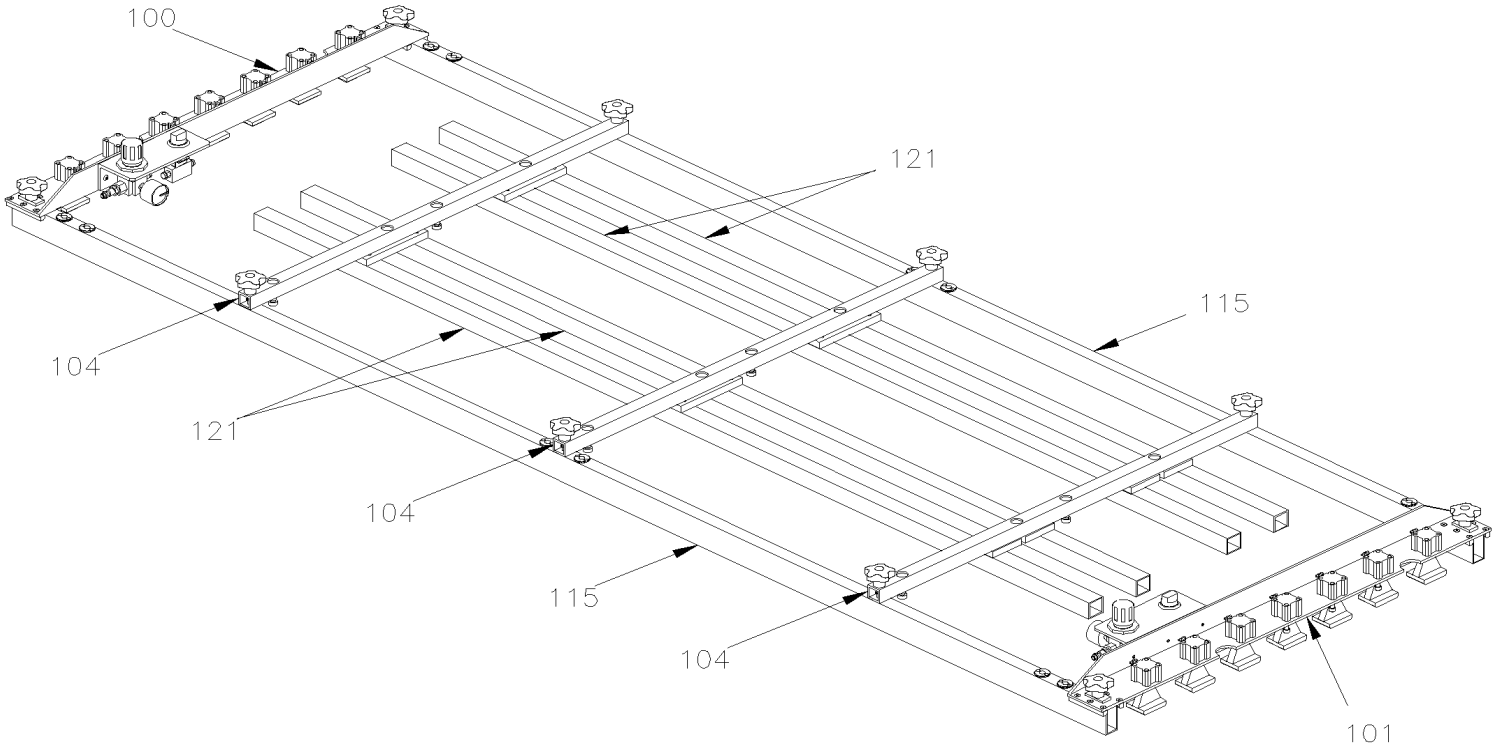

From Y-7046 To 8-9339		Date:07/2024	PAGE:Y2-1853-50
JIG TOOL - SIDE PANELING INSTALLATION			

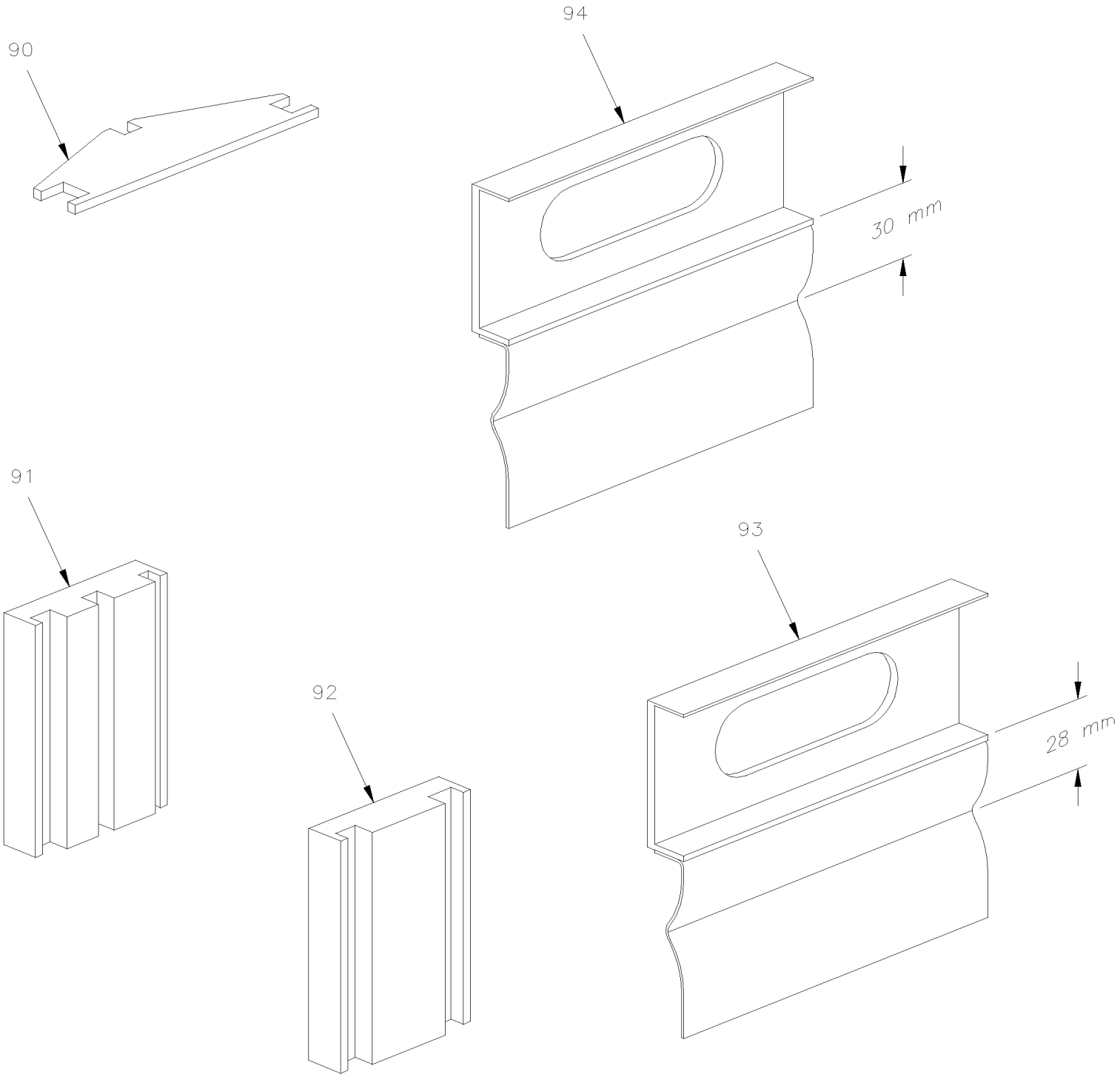

From Y-7046 To 8-9339		Date:07/2024	PAGE:Y2-1853-50
JIG TOOL - SIDE PANELING INSTALLATION			

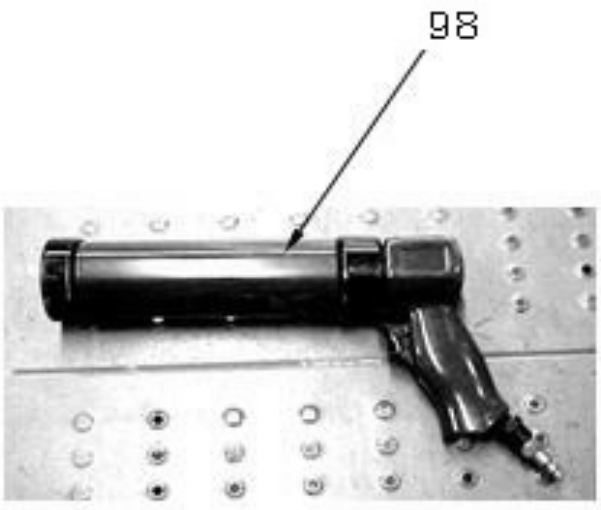

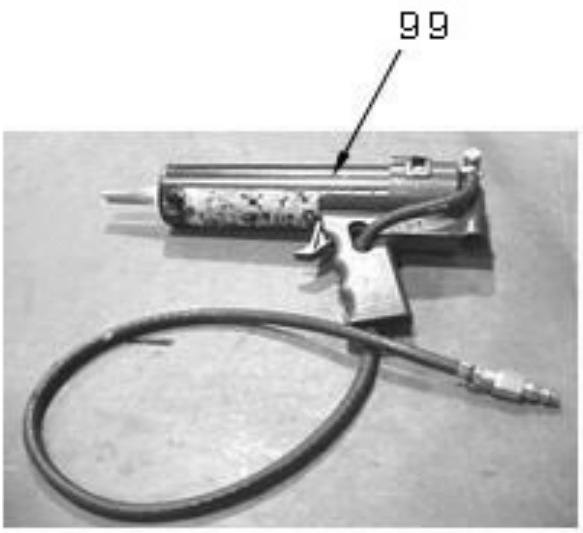

From Y-7046 To 8-9339		Date:07/2024	PAGE:Y2-1853-50
JIG TOOL - SIDE PANELING INSTALLATION			

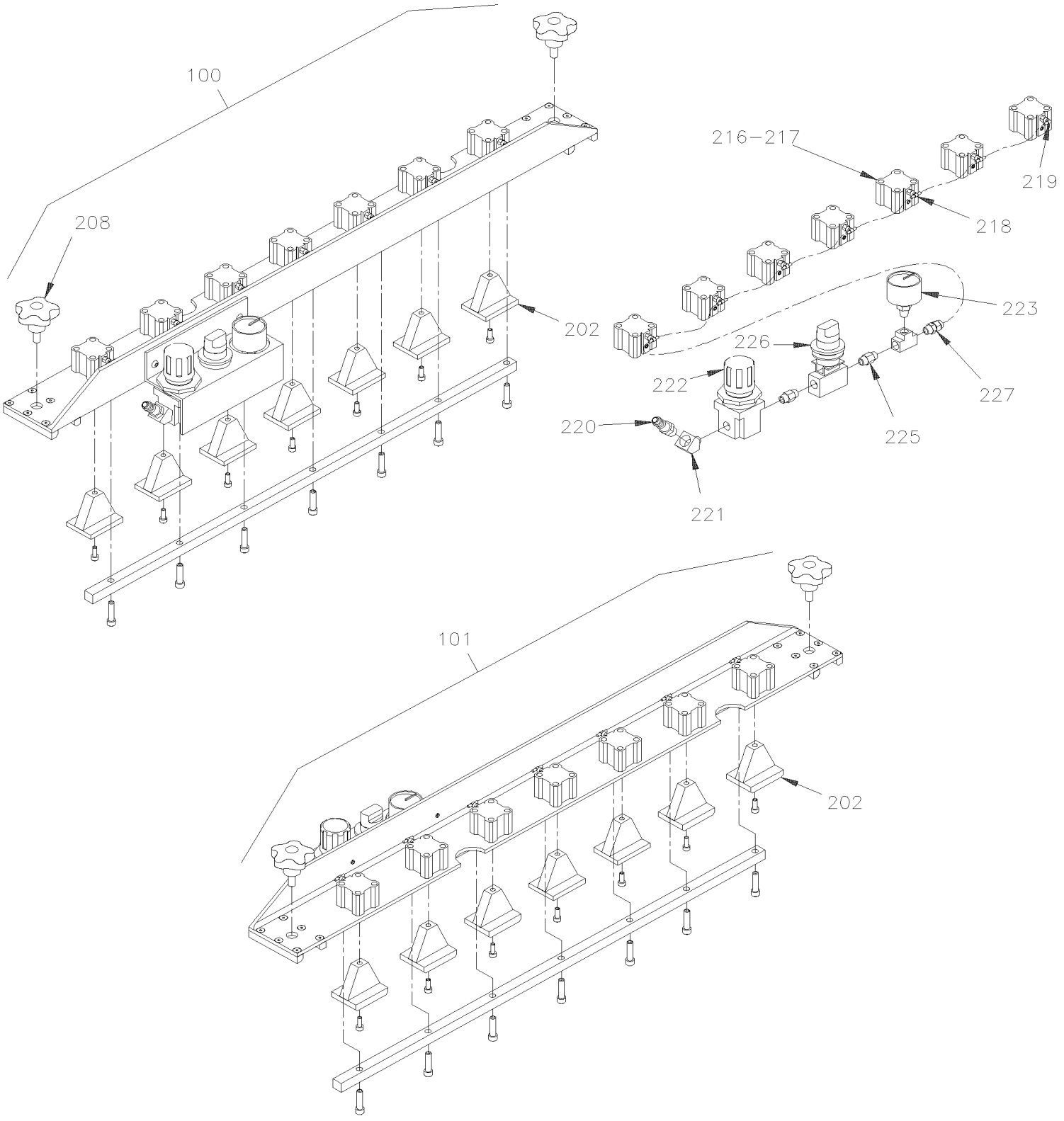

From Y-7046 To 8-9339		Date:07/2024	PAGE:Y2-1853-50
JIG TOOL - SIDE PANELING INSTALLATION			

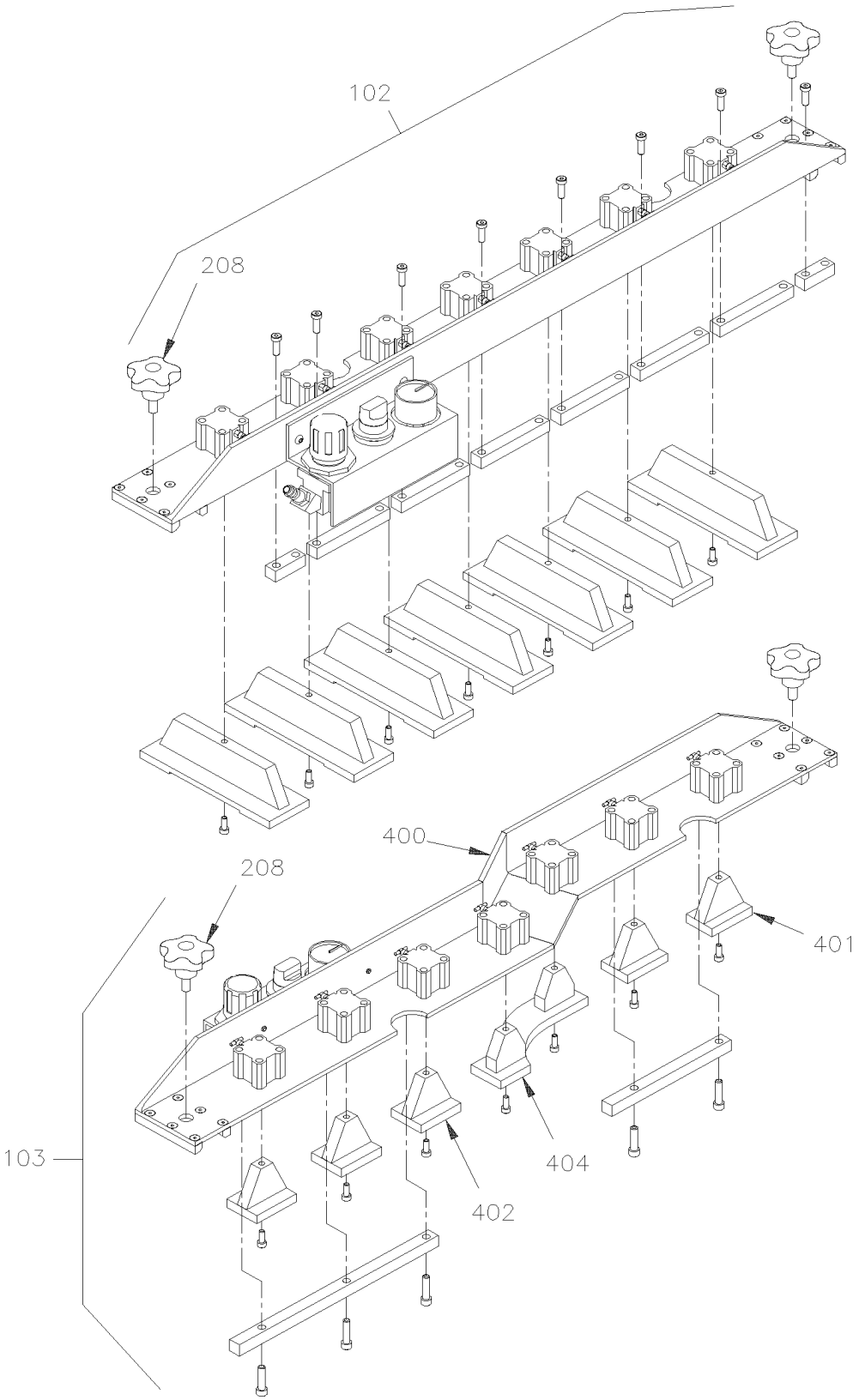

From Y-7046 To 8-9339		Date:07/2024	PAGE:Y2-1853-50
JIG TOOL - SIDE PANELING INSTALLATION			

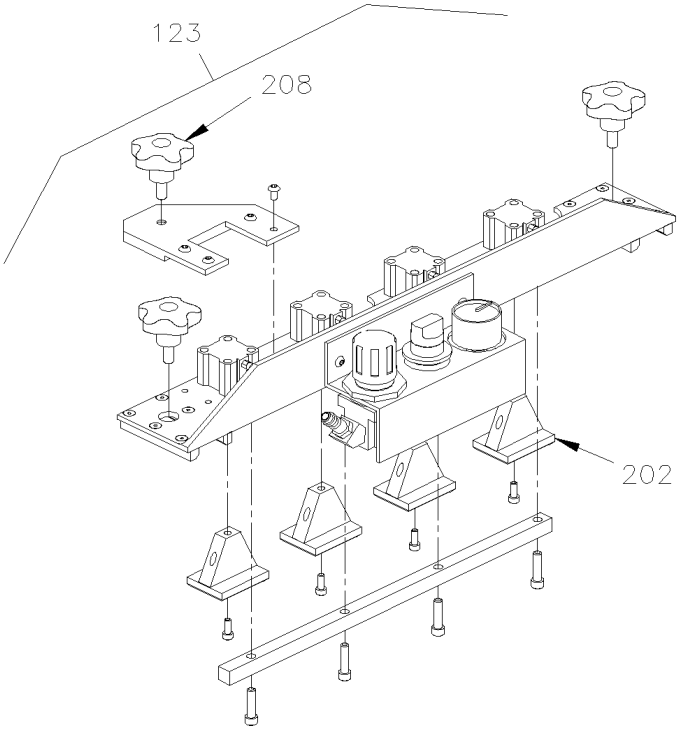

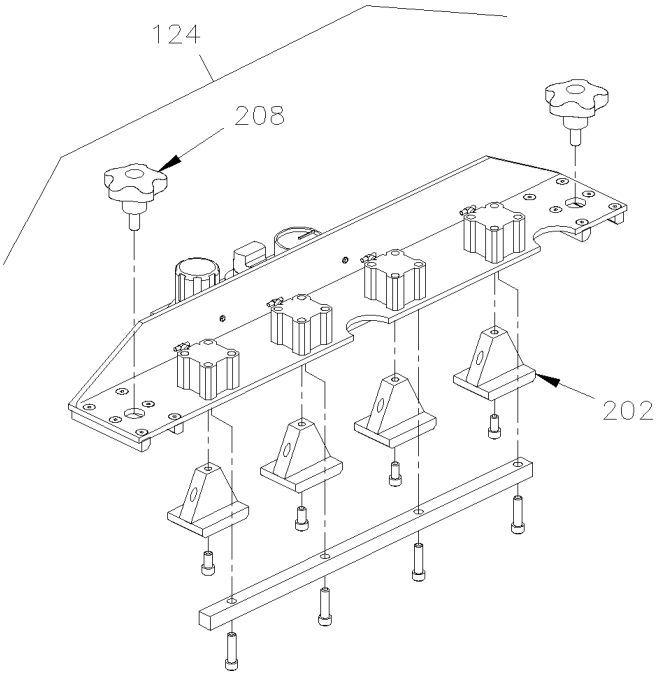

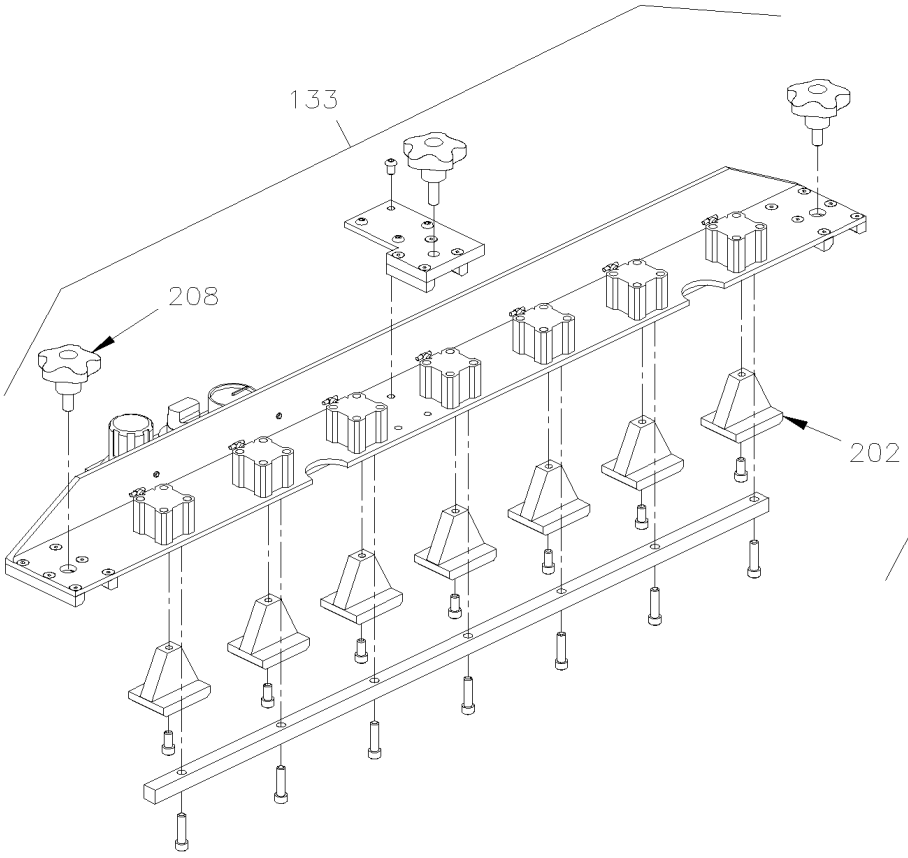

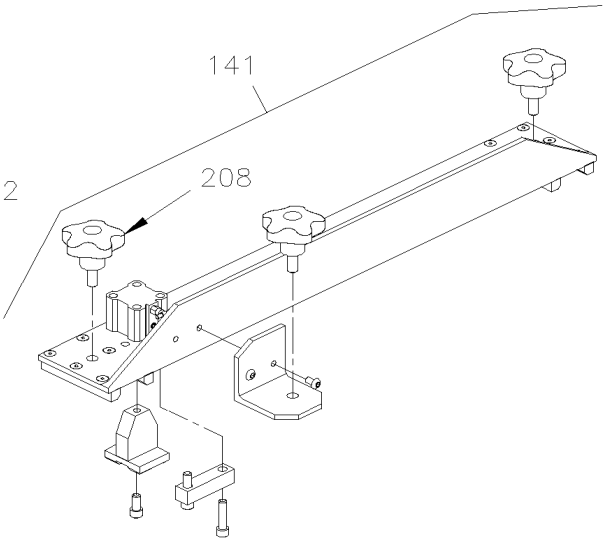

From Y-7046 To 8-9339		Date:07/2024	PAGE:Y2-1853-50

JIG TOOL - SIDE PANELING INSTALLATION

Item#	Part	Description	XLII 45	XLII MTH40	XLII MTH45	XLII MTH45E	NOTES
1	684593	KIT JIG ASM / 28 3/8" WIDE			1		
2	684623	KIT JIG ASM / 87 5/16" WIDE			1		
3	684627	KIT JIG ASM / 47 7/8" WIDE			1		
4	684631	KIT JIG ASM / 94 & 95 5/8" WIDE			1		
5	684638	KIT JIG ASM / 90 5/16" & 95 5/8" WIDE To 3-8164			1		
6	684542	KIT JIG ASM / 18 1/4 & 90 5/16" WIDE From 4-8165			1		
7	684639	KIT JIG ASM / 97 1/16" & 95 5/8" WIDE To 3-8164			1		
8	684551	KIT JIG ASM / 70 1/2 & 90 5/16" WIDE From 4-8165			1		
9	684538	KIT JIG ASM / 44 5/8" WIDE		1	1	1	
10	684553	KIT JIG ASM / 69 3/4" (2) & 15 1/8" WIDE From 4-8165			1		
11	684561	KIT JIG ASM / 69 3/4" WIDE			1		
12	684559	KIT JIG ASM / 70 1/2" WIDE From 4-8165			1		
13	684539	KIT JIG ASM / 59 5/16" WIDE			1	1	
14	684534	KIT JIG ASM / 95 5/8" WIDE		1	1	1	
50	690053	PANEL SUB ASSY / FORWARD FRT/"SLIDE-OUT" / S.B. To 4-8247			1		
50	476120	PANEL SUB ASSY / FORWARD FRT/"SLIDE-OUT" / S.B. From 4-8248 To 5-8468			1		
50	477592	PANEL SUB ASSY / FORWARD FRT/"SLIDE-OUT" / B.A. From 5-8469			1		
50	477593	PANEL / FORWARD FRT/"SLIDE-OUT" / B.A. SERVICE From 5-8469					
51	690192	PANEL SUB ASSY / FORWARD FRT/"SLIDE-OUT" / S.B. To 4-8247			1		
51	476136	PANEL SUB ASSY / FORWARD FRT/"SLIDE-OUT" / S.B. From 4-8248 To 5-8468			1		
51	477598	PANEL SUB ASSY / FORWARD FRT/"SLIDE-OUT" / B.A. From 5-8469			1		
51	477599	PANEL / FORWARD FRT/"SLIDE-OUT" / B.A. From 5-8469			1		
52	690194	PANEL SUB ASSY / BACKWARD FRT/"SLIDE-OUT" / S.B. To 4-8247			1		
52	476137	PANEL SUB ASSY / BACKWARD FRT/"SLIDE-OUT" / S.B. From 4-8248 To 5-8468			1		
52	477600	PANEL SUB ASSY / BACKWARD FRT/"SLIDE-OUT" / B.A. From 5-8469			1		
52	477601	PANEL / BACKWARD FRT/"SLIDE-OUT" / B.A. / SERVICE From 5-8469			1		
53	690054	PANEL SUB ASSY / BACKWARD FRT/"SLIDE-OUT" / 1215MM / S.B. To 4-8247			1		
53	476116	PANEL SUB ASSY / BACKWARD FRT/"SLIDE-OUT" / 1215MM / S.B. From 4-8248 To 5-8468			1		
53	476253	PANEL SUB ASSY / BACKWARD FRT/"SLIDE-OUT" / 1219MM / S.B. To 5-8468			1		S C
53	477594	PANEL SUB ASSY / BACKWARD FRT/"SLIDE-OUT" / 1215MM / B.A. From 5-8469			1		
53	477595	PANEL / BACKWARD FRT/"SLIDE-OUT" / 1215MM / B.A. From 5-8469			1		
53	477823	PANEL SUB ASSY / BACKWARD FRT/"SLIDE-OUT" / 1219MM / B.A. From 5-8469			1		S C
53	477825	PANEL / BACKWARD FRT/"SLIDE-OUT" / 1219MM / B.A. / SERVICE From 5-8469			1		
54	690024	PANEL SUB ASSY / FORWARD REAR /"SLIDE-OUT" / S.B. To 4-8247			1		
54	476117	PANEL SUB ASSY / FORWARD REAR/"SLIDE-OUT" / S.B. From 4-8248 To 5-8468			1		
54	477596	PANEL SUB ASSY / FORWARD REAR/"SLIDE-OUT" / B.A. From 5-8469 To 6-8805			1		
54	477597	PANEL / FORWARD REAR/"SLIDE-OUT" / B.A. / SERVICE From 5-8469 To 6-8805			1		
54	477785	PANEL SUB ASSY / FORWARD REAR/"SLIDE-OUT". / B.A. From 6-8806			1		

From Y-7046 To 8-9339		Date:07/2024	PAGE:Y2-1853-50

JIG TOOL - SIDE PANELING INSTALLATION

Item#	Part	Description	XLII 45	XLII MTH40	XLII MTH45	XLII MTH45E	NOTES
54	477786	PANEL / FORWARD REAR/"SLIDE-OUT" / B.A. / SERVICE From 6-8806			1		
56	690188	PANEL SUB ASSY / REAR / "SLIDE-OUT" / S.B. To 4-8247			1		
56	476131	PANEL SUB ASSY / REAR / "SLIDE-OUT" / S.B. From 4-8248 To 5-8468			1		
56	477602	PANEL SUB ASSY / REAR / "SLIDE-OUT" / B.A. From 5-8469 To 6-8805			1		
56	477603	PANEL / REAR / "SLIDE-OUT" / B.A. / SERVICE From 5-8469 To 6-8805			1		
56	477783	PANEL SUB ASSY / REAR / "SLIDE-OUT" / B.A. From 6-8806			1		
56	477784	PANEL / REAR / "SLIDE-OUT" / B.A. / SERVICE From 6-8806			1		
57	690025	PANEL SUB ASSY / LOWER, REAR "SLIDE-OUT" / S.B. To 3-8164			1		
57	474828	PANEL ONLY / LOWER, REAR "SLIDE-OUT" / S.B. / SERVICE			1		
57	477824	PANEL ONLY / LOWER, REAR "SLIDE-OUT" / B.A. / SERVICE			1		
NS	475581	REINFORCEMENT 67MM X 1821MM / SERVICE			1		
NS	475582	REINFORCEMENT 67MM X 1934MM / SERVICE			1		
58	475839	PANEL SUB ASSY / LOWER, REAR "SLIDE-OUT" / S.B. From 4-8165 To 5-8468			1		R
58	477590	PANEL SUB ASSY / LOWER, REAR "SLIDE-OUT" / B.A. From 5-8469 To 6-8805			1		R
58	477591	PANEL / LOWER, REAR "SLIDE-OUT" / B.A. From 5-8469 To 6-8805			1		S
58	477787	PANEL SUB ASSY / LOWER, REAR "SLIDE-OUT" / B.A. From 6-8806			1		R
58	477788	PANEL / LOWER, REAR "SLIDE-OUT" / B.A. / SERVICE From 6-8806			1		
58	475850	PANEL SUB ASSY / LOWER, REAR "SLIDE-OUT" / S.B. From 4-8165 To 5-8468			1		S
58	476469	PANEL SUB ASSY / LOWER, REAR "SLIDE-OUT" / B.A. From 5-8469			1		S
59	474152	PANEL SUB ASSY AIR INTAKE LH / S.B. O.E.M. To 2-7818			1		
59	475525	PANEL SUB ASSY AIR INTAKE LH / S.B. O.E.M. From 2-7819 To 4-8164			1		R
59	475599	PANEL SUB ASSY AIR INTAKE LH / S.B. / SERVICE From 2-7819 To 4-8164			1		S
59	474152	PANEL SUB ASSY AIR INTAKE LH / S.B. O.E.M. To 2-7818		1		1	R
59	475525	PANEL SUB ASSY AIR INTAKE LH / S.B. O.E.M. From 2-7819 To 5-8468		1		1	R
59	475599	PANEL SUB ASSY AIR INTAKE LH / S.B. / SERVICE From 2-7819 To 5-8468		1		1	S
59	477566	PANEL SUB ASSY AIR INTAKE LH / B.A. O.E.M. From 5-8469 To 5-8813		1			R
59	476468	PANEL SUB ASSY AIR INTAKE LH / B.A. / SERVICE From 5-8469 To 5-8813		1			S
59	477567	PANEL SUB ASSY AIR INTAKE LH / B.A. / SERVICE From 5-8469 To 5-8813		1			S
59	479163	PANEL / UPPER / RADIATOR DOOR 136MM X 1285MM / B.A.		1	1	1	N
59	474200	PANEL SUB ASSY AIR INTAKE LH / 89" / S.B. To 2-7818				1	
60	474151	PANEL SUB ASSY AIR INTAKE RH / S.B. To 2-7818		1	1	1	R
60	475524	PANEL SUB ASSY AIR INTAKE RH / S.B. O.E.M. From 2-7819 To 5-8468		1	1	1	R
60	475598	PANEL SUB ASSY AIR INTAKE RH / S.B. / SERVICE From 2-7819 To 5-8468		1	1	1	S
60	477572	PANEL SUB ASSY AIR INTAKE RH / B.A. O.E.M. From 5-8469		1	1		R
60	476467	PANEL SUB ASSY AIR INTAKE RH / B.A. / SERVICE From 5-8469		1	1		S
60	477573	PANEL AIR INTAKE RH / B.A. / SERVICE From 5-8469		1	1		S
60	474201	PANEL SUB ASSY AIR INTAKE RH / 89" / S.B. To 2-7818				1	

From Y-7046 To 8-9339		Date:07/2024	PAGE:Y2-1853-50

JIG TOOL - SIDE PANELING INSTALLATION

Item#	Part	Description	XLII 45	XLII MTH40	XLII MTH45	XLII MTH45E	NOTES
61	475840	PANEL SUB ASSY AIR INTAKE LH / S.B. O.E.M. From 4-8165 To 5-8468			1		R
61	475851	PANEL SUB ASSY AIR INTAKE LH / S.B. / SERVICE From 4-8165 To 5-8468			1		S
61	477574	PANEL SUB ASSY AIR INTAKE LH / B.A. From 5-8469 To 5-8805			1		R
61	476470	PANEL SUB ASSY AIR INTAKE LH / B.A. / SERVICE From 5-8469 To 5-8805			1		S
61	477575	PANEL AIR INTAKE LH / B.A. / SERVICE From 5-8469 To 5-8805			1		S
61	477781	PANEL SUB ASSY AIR INTAKE LH / B.A. From 5-8806 To 8-8339			1		R
61	477782	PANEL AIR INTAKE LH / B.A. / SERVICE From 5-8806 To 8-8339			1		
62	475658	PANEL SUB ASSY AIR INTAKE LH / S.B. From 4-8165 To 5-8468			1		
62	477568	PANEL SUB ASSY AIR INTAKE LH / B.A. From 5-8469 To 8-9339			1		
62	477569	PANEL AIR INTAKE LH / B.A. / SERVICE From 5-8469 To 8-9339			1		
63	475654	PANEL SUB ASSY / S.B. From 4-8165 To 5-8468			1		
63	477580	PANEL SUB ASSY / B.A. From 5-8469			1		
63	477581	UPPER PANEL / W/OUT REINFORCEMENT / 840MM X 1789MM / B.A. / SERVICE From 5-8469			1		S
64	474150	PANEL SUB ASSY / S.B. To 2-7818			1	1	A
64	475523	PANEL SUB ASSY / S.B. O.E.M. From 2-7819 To 5-8468			1	1	A R
64	475597	PANEL SUB ASSY / S.B. / SERVICE From 2-7819 To 5-8468			1	1	A S
64	477576	PANEL SUB ASSY / B.A. O.E.M. From 5-8469			1		R
64	476466	PANEL SUB ASSY / B.A. / SERVICE From 5-8469			1		S
64	477577	UPPER PANEL / W/OUT REINFORCEMENT / 840MM X 1521MM / B.A. / SERVICE From 5-8469			1		S
65	474149	PANEL SUB ASSY / S.B. To 2-7818		8	8	8	
65	475522	PANEL SUB ASSY / S.B. O.E.M. From 2-7819 To 5-8468		8	8	8	R
65	475596	PANEL SUB ASSY / S.B. / SERVICE From 2-7819 To 5-8468		8	8	8	S
65	477578	PANEL SUB ASSY / B.A. O.E.M. From 5-8469		8	8		R
65	476465	PANEL SUB ASSY / B.A. / SERVICE From 5-8469		8	8		S
65	477579	UPPER PANEL / W/OUT REINFORCEMENT / 840MM X 2428MM / B.A. / SERVICE From 5-8469		8	8		S
90	684598	GLUE JIG		1	1	1	
91	684614	TOP MOULDING TAPE APPLICATOR JIG		1	1	1	
92	684604	BOTTOM MOULDING TAPE APPLICATOR JIG		1	1	1	
93	684533	TOP MOULDING INSTALLATION JIG		1	1	1	
94	684656	BOTTOM MOULDING INSTALLATION JIG		1	1	1	
95	682176	SEALANT SIKA #221 / BLACK / 310ml CARTRIDGE		AR	AR	AR	
96	683481	ACCELERATOR SIKA / 310ml CARTRIDGE		AR	AR	AR	
98	683634	PNEUMATIC GUN / "RODAC"		1	1	1	
99	684427	PNEUMATIC GUN / "WESTBURNE"		1	1	1	
100	684599	SUPPORT CYLINDER ASSY L.H. STD W/7 CYL		1	1	1	
101	684620	SUPPORT CYLINDER ASSY R.H. STD W/7 CYL		1	1	1	

From Y-7046 To 8-9339		Date:07/2024	PAGE:Y2-1853-50

JIG TOOL - SIDE PANELING INSTALLATION

Item#	Part	Description	XLII 45	XLII MTH40	XLII MTH45	XLII MTH45E	NOTES
102	684640	SUPPORT CYLINDER ASSY R.H. W/WIDE SHOES To 3-8164			1		
103	684632	SUPPORT CYLINDER ASSY R.H. "S" SHAPE			1		
104	684621	TUBE VERTICAL SUPPORT 33 1/8"		3	3	3	
105	684594	TUBE HORIZONTAL SUPPORT 28 3/8"			2		
106	684628	TUBE HORIZONTAL SUPPORT 47 7/8"			1		
107	684540	TUBE HORIZONTAL SUPPORT 59 15/16"		1	1	1	
111	684624	TUBE HORIZONTAL SUPPORT 87 5/16"			2		
112	684532	TUBE HORIZONTAL SUPPORT 90 5/16" / W/"S" To 3-8164			1		
113	684636	TUBE HORIZONTAL SUPPORT 94"			1		
114	684637	TUBE HORIZONTAL SUPPORT 95 5/8"			2		
115	684535	TUBE HORIZONTAL SUPPORT 95 5/8"		2	2	2	
116	684643	TUBE HORIZONTAL SUPPORT 97 1/16" To 3-8164			1		
117	684522	TUBE HORIZONTAL SUPPORT 95 5/8" / W/"S" To 3-8164			1		
118	684597	FRAME ASSY 16"			1		
119	684630	FRAME ASSY 34"			2		
120	684541	FRAME ASSY 48"		1	1	1	
121	684625	FRAME ASSY 73"		2	2	2	
122	684626	FRAME ASSY 80"		1	1	1	
123	684524	SUPPORT CYLINDER ASSY L.H. SHORT W/4 CYL			1		
124	684525	SUPPORT CYLINDER ASSY R.H. SHORT W/4 CYL			1		
125	684560	TUBE HORIZONTAL SUPPORT 70 1/2" From 4-8165			1		
126	684562	TUBE HORIZONTAL SUPPORT 69 3/4" / UPPER From 4-8165			1		
127	684563	TUBE HORIZONTAL SUPPORT 69 3/4" / LOWER From 4-8165			1		
128	684530	TUBE VERTICAL SUPPORT 19 7/8" From 4-8165			2		
129	684531	FRAME ASSY 28"			1		
130	684552	FRAME ASSY 54" From 4-8165			1		
131	684527	TUBE HORIZONTAL SUPPORT 44 5/8" / UPPER			1		
132	684529	TUBE HORIZONTAL SUPPORT 44 5/8" / LOWER			1		
133	684543	SUPPORT CYLINDER ASSY R.H. W/7 CYL / W/COOLING USE From 4-8165			1		
134	684545	TUBE HORIZONTAL SUPPORT 70 1/2" / LOWER From 4-8165			1		
135	684544	TUBE HORIZONTAL SUPPORT 90 5/16" / UPPER From 4-8165			1		
136	684546	TUBE HORIZONTAL SUPPORT 18 1/4" / LOWER From 4-8165			1		
137	684547	FRAME ASSY 60" From 4-8165			1		
138	684548	FRAME ASSY 60" W/SLIDE OUT From 4-8165			1		
139	684549	FRAME ASSY 10" From 4-8165			1		
140	684550	FRAME ASSY 10" W/SLIDE OUT From 4-8165			1		
141	684554	SUPPORT CYLINDER ASSY L.H. SHORT W/1 CYL From 4-8165			1		
142	684555	TUBE HORIZONTAL SUPPORT 69 3/4" / UPPER From 4-8165			1		
143	684556	TUBE HORIZONTAL SUPPORT 69 3/4" / LOWER From 4-8165			1		
144	684557	TUBE HORIZONTAL SUPPORT 15 1/8" From 4-8165			1		
145	684536	TUBE VERTICAL AUXILIARY SUPPORT 45 1/2"		3	3	3	
202	684600	HOLDING BLOCK ASSY 1 7/8" HEIGHT / W/CHAMFER		1	1	1	

From Y-7046 To 8-9339		Date:07/2024	PAGE:Y2-1853-50

JIG TOOL - SIDE PANELING INSTALLATION

Item#	Part	Description	XLII 45	XLII MTH40	XLII MTH45	XLII MTH45E	NOTES
208	684602	HANDLE 5/16-18		1	1	1	
216	684609	SCREW CAP HEXS 1/4-20x1/2		1	1	1	
217	684610	CYLINDER 20MM / 10MM STROKE AVEC GROSSE BARRURE		1	1	1	
218	684611	MALE BRANCH TEE / PUSH-IN FITTING / #4X#4XM5-0.8 PLAS		1	1	1	
219	684612	MALE ELBOW 90° / PUSH-IN FITTING / #2xM5-0.8 PLAS		1	1	1	
220	684613	NIPPLE / QUICK DISCONNECT "INDUSTRIAL" / #4x1/4NPT-M STL		1	1	1	
221	501328	STREET ELBOW 45º / PIPE FITTING / 1/8NPT-Mx1/8NPT-F BR		1	1	1	
222	684615	REGULATOR 1/8 N.P.T.		1	1	1	
223	684616	GAUGE AIR / 0/60		1	1	1	
225	684617	MALE CONNECTOR / PUSH-IN FITTING / #2x1/8NPT-M PLAS		1	1	1	
226	684618	VALVE 3/2 ACTUATOR		1	1	1	
227	684619	MALE ELBOW 90° / PUSH-IN FITTING / #2x1/8NPT-M PLAS		1	1	1	
400	684582	PLATE ASSY WELDED		1	1	1	
401	684634	HOLDING BLOCK ASSY 1 7/8" HEIGHT		1	1	1	
402	684633	HOLDING BLOCK ASSY 1 7/8" HEIGHT		1	1	1	
404	684635	HOLDING BLOCK ASSY 1 7/8" HEIGHT / W/OFFSET		1	1	1	
408	684606	SCREW CAP BUT HEXS #10-24x3/8		1	1	1	
409	684607	SCREW CAP FL HEXS #8-32x1/2		1	1	1	
410	5001269	SCREW CAP HEXS 1/4-20x1 ZP		1	1	1	
411	684605	SCREW CAP HEXS #10-32x1/2		1	1	1	
		A) MTH 45' ENT 86" WITH FLUTE SIDE PANELS "OPTION"					
		C) NEED REWORK FOR ADJUSTMENT					
		N) NO TOOL TO FIX THIS PANEL					
		R) PRODUCTION NUMBER REFERENCE ONLY					
		S) SERVICE NUMBER ONLY					

From Y-7046 To 6-8906		Date:07/2024	PAGE:Y2-1854-00
SIDE PANELS - BUS			

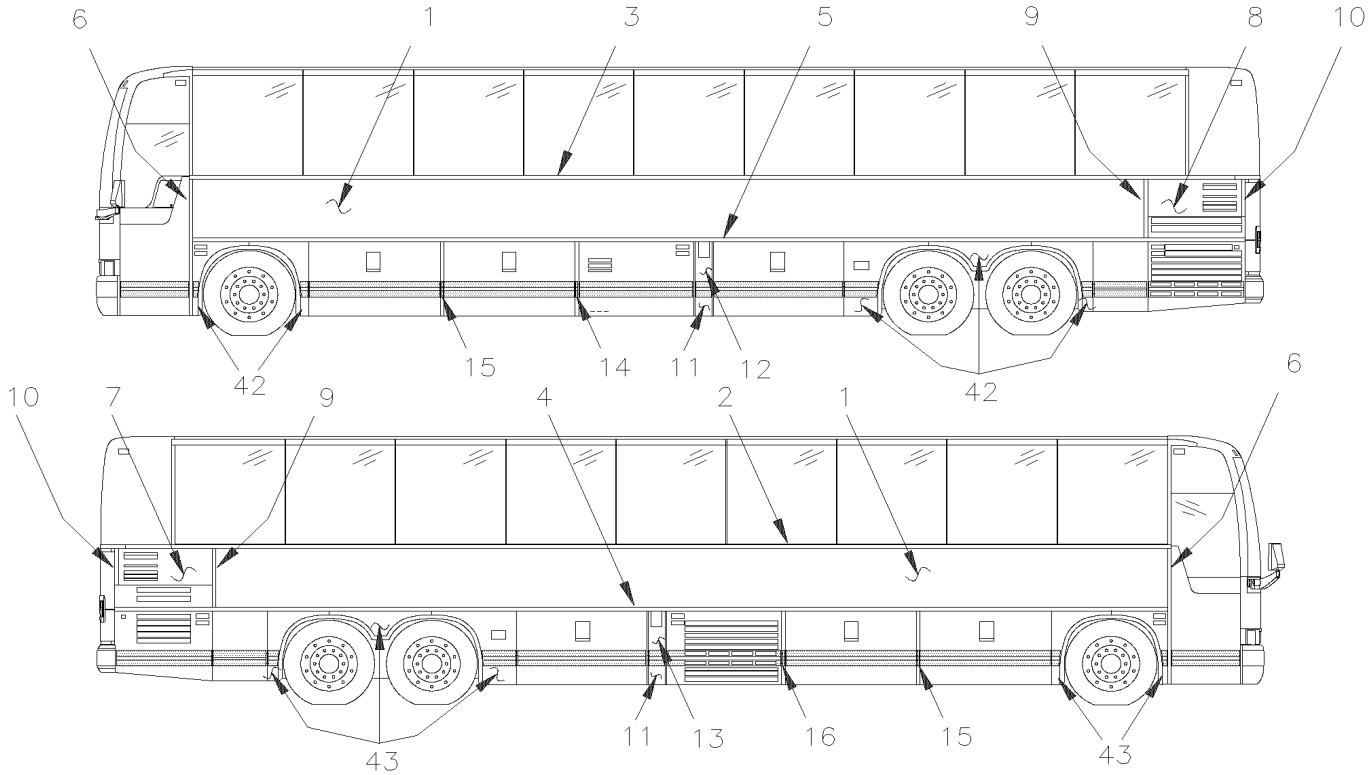

XL2 45'

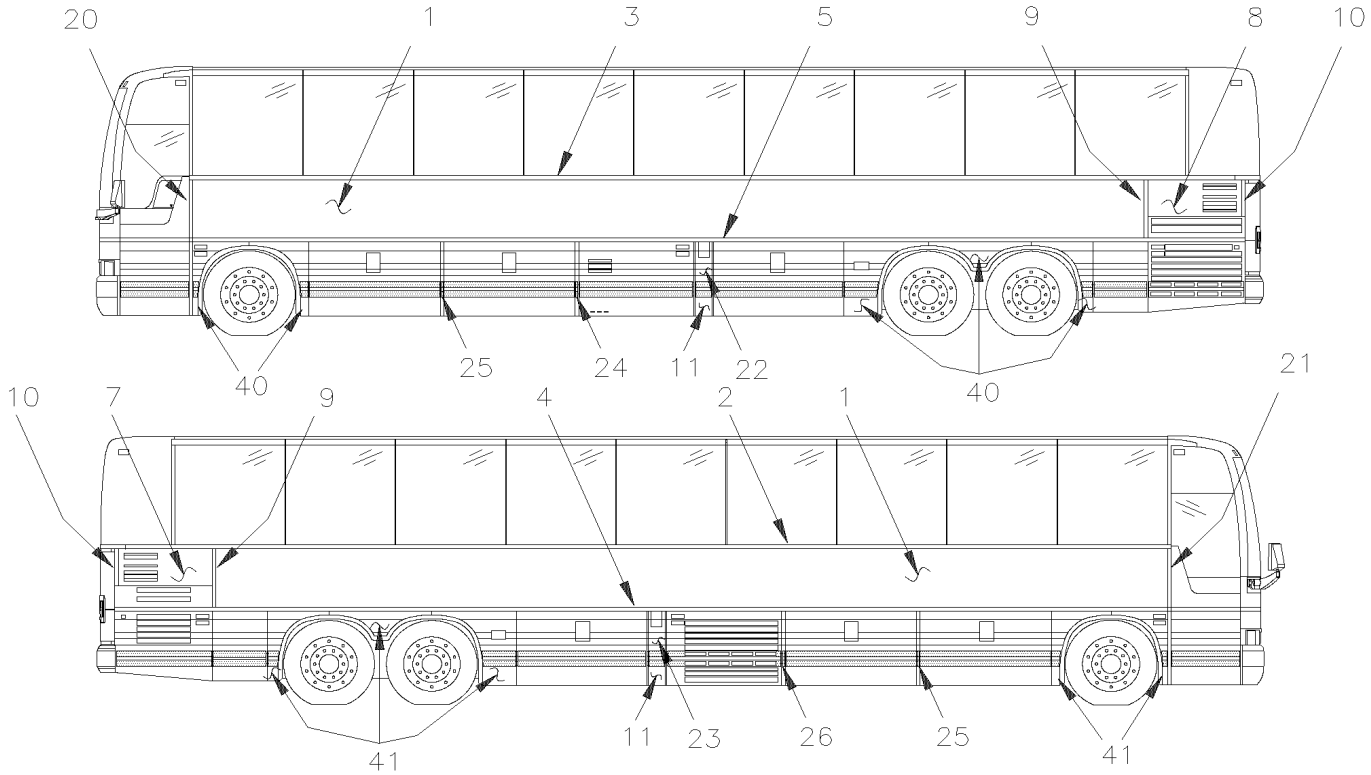

XL2 45' WITH STAINLESS PANELING

From Y-7046 To 6-8906		Date:07/2024	PAGE:Y2-1854-00
SIDE PANELS - BUS			

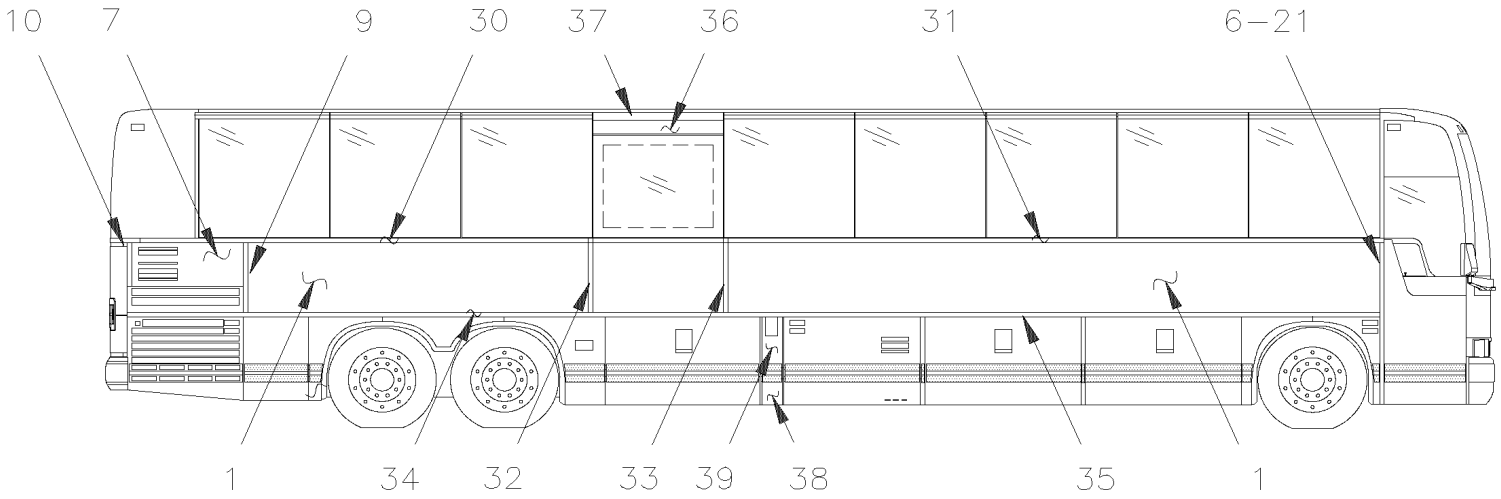

BUS WITH W.C.L.

From Y-7046 To 6-8906		Date:07/2024	PAGE:Y2-1854-00

SIDE PANELS - BUS

Item#	Part	Description	XLII 45	XLII MTH40	XLII MTH45	XLII MTH45E	NOTES
1	970271	STAINLESS STEEL SHEET 759MM X 11392MM	2				
NS	506759	TAPE RUB ADH2 CC POL 1/8" x 1/2" x 100' / BLACK I1C-N-A	1				
NS	506648	TAPE RUB ADH1 CC POL 1/8" x 1/2"x 50' / GREY 2542	1				
2	474514	FINISHING MOULDING UPPER R.H. 12253MM	1				
. NS	506785	. TAPE RUB ADH2 CC POL 1/16" X 1/4" X 200' / BLACK I1C-N-A	AR				
. NS	506790	. TAPE RUB ADH2 CC POL 1/16" x 1/2" x 200' / BLACK I1C-N-A	AR				
3	474515	FINISHING MOULDING UPPER L.H. 12253MM	1				
. NS	506785	. TAPE RUB ADH2 CC POL 1/16" X 1/4" X 200' / BLACK I1C-N-A	AR				
. NS	506790	. TAPE RUB ADH2 CC POL 1/16" x 1/2" x 200' / BLACK I1C-N-A	AR				
4	474512	FINISHING MOULDING LOWER R.H. 9846MM	1				
. NS	506785	. TAPE RUB ADH2 CC POL 1/16" X 1/4" X 200' / BLACK I1C-N-A	AR				
. NS	506769	. TAPE RUB ADH2 CC POL 1/8" x 1/4" x 60' / BLACK H1CC-N-#14	AR				
5	474513	FINISHING MOULDING LOWER L.H. 9846MM	1				
. NS	506785	. TAPE RUB ADH2 CC POL 1/16" X 1/4" X 200' / BLACK I1C-N-A	AR				
. NS	506769	. TAPE RUB ADH2 CC POL 1/8" x 1/4" x 60' / BLACK H1CC-N-#14	AR				
6	474388	FINISHING MOULDING S.S.	2				
NS	504473	RIVET POP DOME OE 1/8x1/4 SS	12				
6	506869	TAPE RUB ADH2 POL .031" X 1/4" X 300' / BLACK	AR				
6	506785	TAPE RUB ADH2 CC POL 1/16" X 1/4" X 200' / BLACK I1C-N-A	AR				
7	474347	PANEL SUB ASSY AIR INTAKE R.H. O.E.M.	1				
7	475603	PANEL SUB ASSY AIR INTAKE R.H. SERVICE	1				
7	474244	PANEL AIR INTAKE R.H. SERVICE	1				
7	477830	PANEL SUB ASSY AIR INTAKE R.H. / "SPECIAL OPTION" HYDRO QC	1				
7	477832	PANEL AIR INTAKE L.H. / "SPECIAL OPTION" HYDRO QC SERVICE	1				
8	474346	PANEL SUB ASSY AIR INTAKE L.H. O.E.M.	1				
8	475602	PANEL SUB ASSY AIR INTAKE L.H. SERVICE	1				
8	474243	PANEL AIR INTAKE L.H. SERVICE	1				
8	477831	PANEL SUB ASSY AIR INTAKE L.H. / "SPECIAL OPTION" HYDRO QC	1				
8	477832	PANEL AIR INTAKE L.H. / "SPECIAL OPTION" HYDRO QC SERVICE	1				
9	474409	FINISHING MOULDING ALUMINUM 713MM	2				
9	506769	TAPE RUB ADH2 CC POL 1/8" x 1/4" x 60' / BLACK H1CC-N-#14	AR				
10	474387	FINISHING MOULDING SS 400MM	2				
NS	683083	ADHESIVE SIKA #252 / BLACK / 600 ml SAUSAGE	AR				
NS	683084	SEALANT SIKA #221 / GREY / 600 ml SAUSAGE	AR				
NS	683097	CLEANER SIKA #205 / CLEAR / 1000ml	AR				
NS	683916	PRIMER SIKA #215 / CLEAR / 1000ml	AR				
11	473130	PANEL, LOWER 200MM X 262MM / S.B.	2				
12	474227	PANEL, L.H. 200MM X 676MM	1				
12	477962	PANEL, L.H. W/OUT FUEL DOOR 200MM X 676MM	1				
13	474284	PANEL, R.H. 200MM X 676MM	1				
14	474318	FINISHING POST / "J" SHAPE	1				
15	474224	FINISHING POST / "U" SHAPE 39MM X 912MM	2				

From Y-7046 To 6-8906		Date:07/2024	PAGE:Y2-1854-00

SIDE PANELS - BUS

Item#	Part	Description	XLII 45	XLII MTH40	XLII MTH45	XLII MTH45E	NOTES
16	474226	FINISHING POST / "J" SHAPE	1				
20	474820	FINISHING MOULDING S.S. / L.H.	1				
21	474821	FINISHING MOULDING S.S. / R.H.	1				
22	474048	PANEL, L.H. 200MM X 676MM / S.B.	1				
22	477963	PANEL, L.H. W/OUT FUEL DOOR 200MM X 676MM	1				
23	474049	PANEL, R.H. 200MM X 676MM / S.B.	1				
24	474062	FINISHING POST / "J" SHAPE L.H. / S.B.	1				
25	474054	FINISHING POST / "U" SHAPE / 2 BAG. DOORS / 39MM X 912MM / S.B.	2				
26	474063	FINISHING POST / "J" SHAPE R.H. / S.B.	1				
30	475061	FINISHING MOULDING UPPER R.H. 4479MM	1				
. NS	506785	. TAPE RUB ADH2 CC POL 1/16" X 1/4" X 200' / BLACK I1C-N-A	AR				
. NS	506769	. TAPE RUB ADH2 CC POL 1/8" x 1/4" x 60' / BLACK H1CC-N-#14	AR				
31	475062	FINISHING MOULDING UPPER R.H. 6472MM	1				
. NS	506790	. TAPE RUB ADH2 CC POL 1/16" x 1/2" x 200' / BLACK I1C-N-A	AR				
32	474946	FINISHING MOULDING / SS / BACKWARD W.C.L. DOOR	1				
33	474945	FINISHING MOULDING / SS / FORWARD W.C.L. DOOR	1				
34	475063	FINISHING MOULDING LOWER R.H. 3462MM	1				
. NS	506785	. TAPE RUB ADH2 CC POL 1/16" X 1/4" X 200' / BLACK I1C-N-A	AR				
. NS	506769	. TAPE RUB ADH2 CC POL 1/8" x 1/4" x 60' / BLACK H1CC-N-#14	AR				
35	475060	FINISHING MOULDING LOWER R.H. 6496MM	1				
. NS	506785	. TAPE RUB ADH2 CC POL 1/16" X 1/4" X 200' / BLACK I1C-N-A	AR				
. NS	506769	. TAPE RUB ADH2 CC POL 1/8" x 1/4" x 60' / BLACK H1CC-N-#14	AR				
36	475065	PANEL ASSY / UPPER W.C.L. DOOR	1				
. NS	474822	. PANEL / UPPER W.C.L. DOOR	1				
. NS	474897	. DRIP MOULDING SS	1				
. NS	5001015	. SCREW TP BDG PH #6x1/2 SS BK	8				
36	474822	. PANEL / UPPER W.C.L. DOOR	1				
36	474897	. DRIP MOULDING SS	1				
NS	287190	INSULATOR PANEL UPPER DOOR	2				
NS	287189	INSULATOR PANEL UPPER DOOR	1				
37	293269	EXTRUSION ALUMINUM 1287MM To 4-8270	1				
37	293699	EXTRUSION ALUMINUM 1287MM From 4-8271	1				
38	474693	PANEL, LOWER 196MM X 262MM	1				
39	474680	PANEL, R.H. 196MM X 676MM	1				
40	**Y2-1857-50**	**FENDERS L.H. - MTH**					
41	**Y2-1857-55**	**FENDERS R.H. - MTH**					
42	**Y2-1857-05**	**FENDERS R.H. - BUS W/FLAT PANELING**					
43	**Y2-1857-00**	**FENDERS L.H. - BUS W/FLAT PANELING**					

From Y-7046 To 6-8906		Date:07/2024	PAGE:Y2-1854-10
WEATHERSTRIP & RETAINER - BUS			

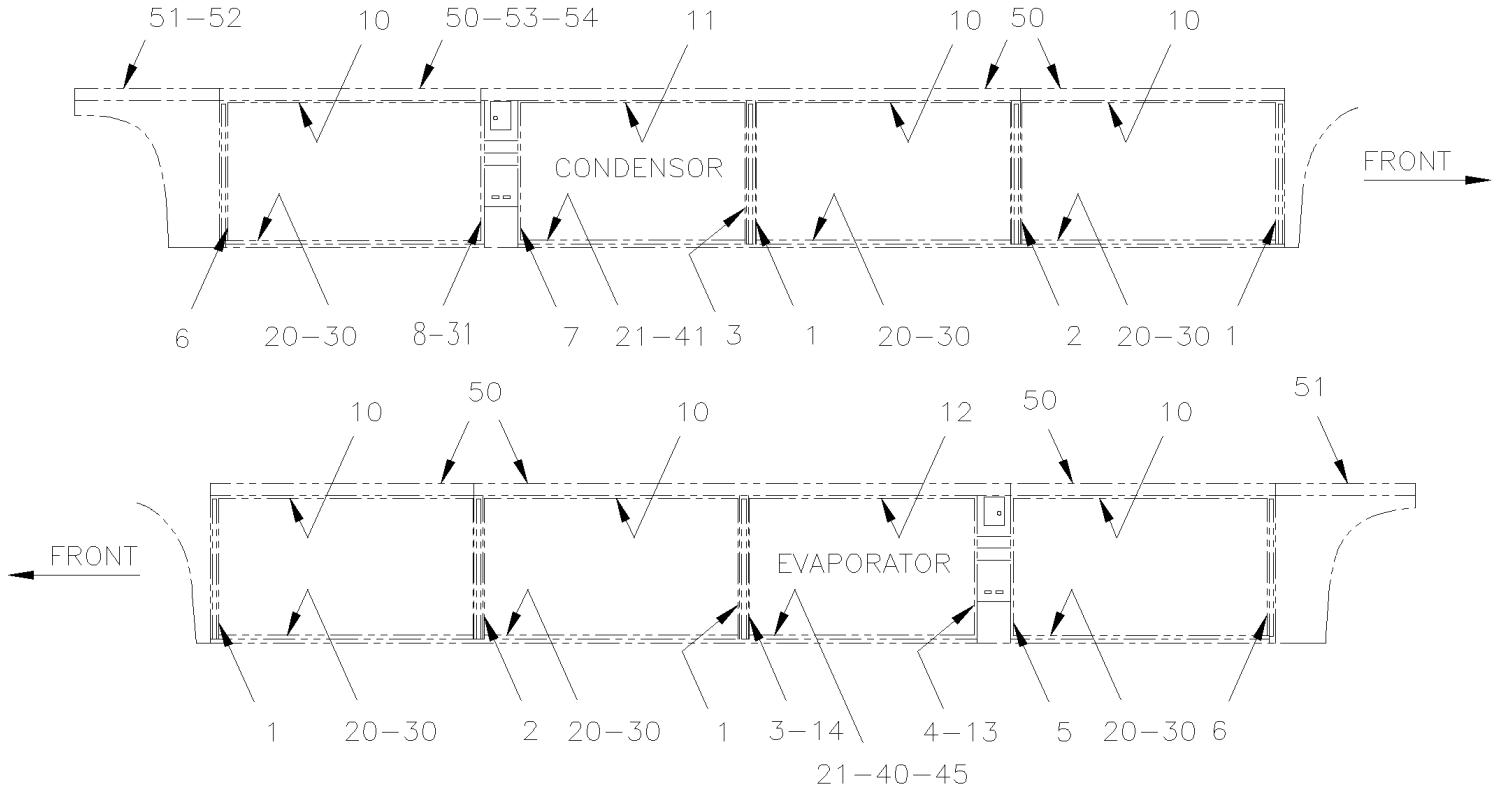

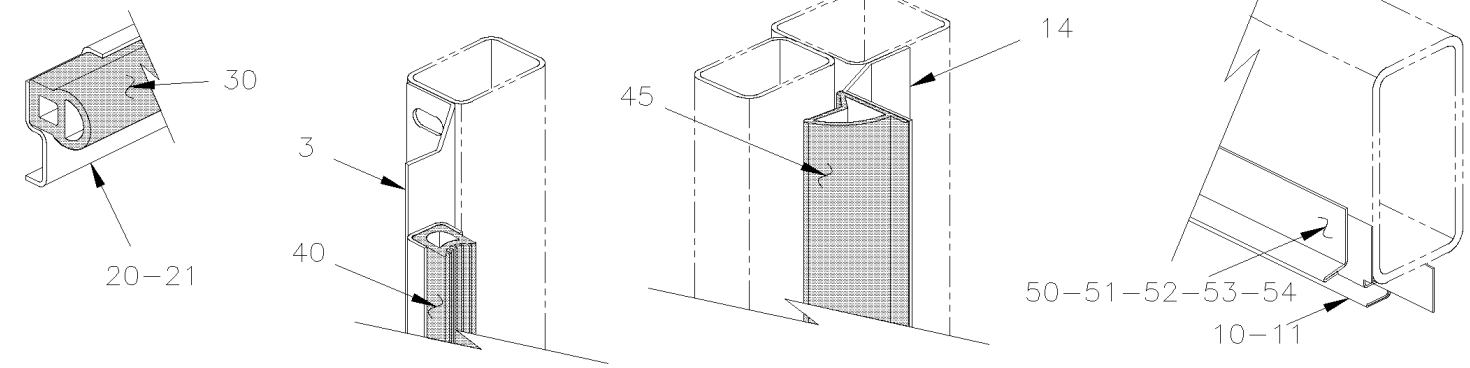

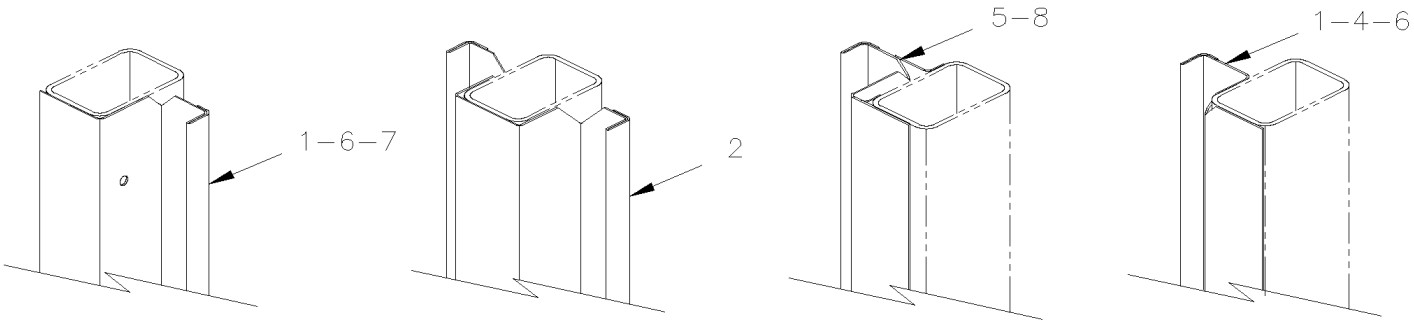

From Y-7046 To 6-8906		Date:07/2024	PAGE:Y2-1854-10

WEATHERSTRIP & RETAINER - BUS

Item#	Part	Description	XLII 45	XLII MTH40	XLII MTH45	XLII MTH45E	NOTES
1	482222	MOULDING / WEATHERSTRIP RETAINER FRONT	4				
2	480979	MOULDING / WEATHERSTRIP RETAINER / DOUBLE TWO BAGGAGE DOOR	2				
3	482137	MOULDING / WEATHERSTRIP RETAINER To 2-7839	1				
4	481013	MOULDING / WEATHERSTRIP RETAINER 838MM To 2-7839	1				
5	481269	MOULDING / WEATHERSTRIP RETAINER / L.H. / 838MM	1				
6	482824	MOULDING / WEATHERSTRIP RETAINER 838MM	2				
7	481255	MOULDING / WEATHERSTRIP RETAINER 838MM	1				
8	481270	MOULDING / WEATHERSTRIP RETAINER / R.H. / 838MM	1				
10	473702	MOULDING / WEATHERSTRIP RETAINER 1543MM	6				
11	473701	MOULDING / WEATHERSTRIP RETAINER 1365MM	1				
12	475153	MOULDING / WEATHERSTRIP RETAINER 1365MM To 2-7839	1				
12	214683	SEAL DOOR RETAINER / UPPER DOOR From 2-7840	1				
13	214682	SEAL DOOR RETAINER / BACKWARD DOOR From 2-7840	1				
14	214684	SEAL DOOR RETAINER / FORWARD DOOR From 2-7840	1				
20	483029	MOULDING / WEATHERSTRIP RETAINER / WELDED TO STRUCTURE / 1536MM	6				
21	483031	MOULDING / WEATHERSTRIP RETAINER / WELDED TO STRUCTURE / 1365MM	2				
22	480154	. WEATHERSTRIP RUBBER / ADH / RAW MATERIAL To 5-8544	AR				
22	483941	. WEATHERSTRIP RUBBER / ADH / RAW MATERIAL From 5-8545	AR				
22	485610	. WEATHERSTRIP RUBBER / ADH / RAW MATERIAL	AR				
30	481988	WEATHERSTRIP / W/60" BAGGAGE DOORS	6				
30	485628	WEATHERSTRIP / W/60" BAGGAGE DOORS	6				
30	482330	WEATHERSTRIP / W/60" HINGE BAGGAGE DOOR	1				A
30	485631	WEATHERSTRIP / W/60" HINGE BAGGAGE DOOR	1				
30	480154	. WEATHERSTRIP RUBBER / ADH / RAW MATERIAL To 5-8544	AR				
30	483941	. WEATHERSTRIP RUBBER / ADH / RAW MATERIAL From 5-8545	AR				
30	485610	. WEATHERSTRIP RUBBER / ADH / RAW MATERIAL	AR				
31	474913	MOULDING / WEATHERSTRIP RETAINER / W/W.C.L.	1				A
40	482096	WEATHERSTRIP / EVAPORATOR DOOR To 2-7839	1				
41	482099	WEATHERSTRIP / CONDENSOR DOOR	1				
41	480009	WEATHERSTRIP / CONDENSOR DOOR	1				
45	483555	WEATHERSTRIP / EVAPORATOR DOOR From 2-7840	1				
50	473706	DRIP MOULDING / 1535MM / S.B.	6				
51	474060	DRIP MOULDING / 1765MM / S.B.	2				
52	475024	DRIP MOULDING / 1654MM	1				A
53	475025	DRIP MOULDING / 375MM	1				A
54	474799	DRIP MOULDING / 1285MM	1				B
		A) USE WITH W.C.L.					
		B) FIXED AT W.C.L. ENTRANCE DOOR					

From Y-7046 To 8-9339		Date:07/2024	PAGE:Y2-1854-20
WEATHERSTRIP & RETAINER - MTH			

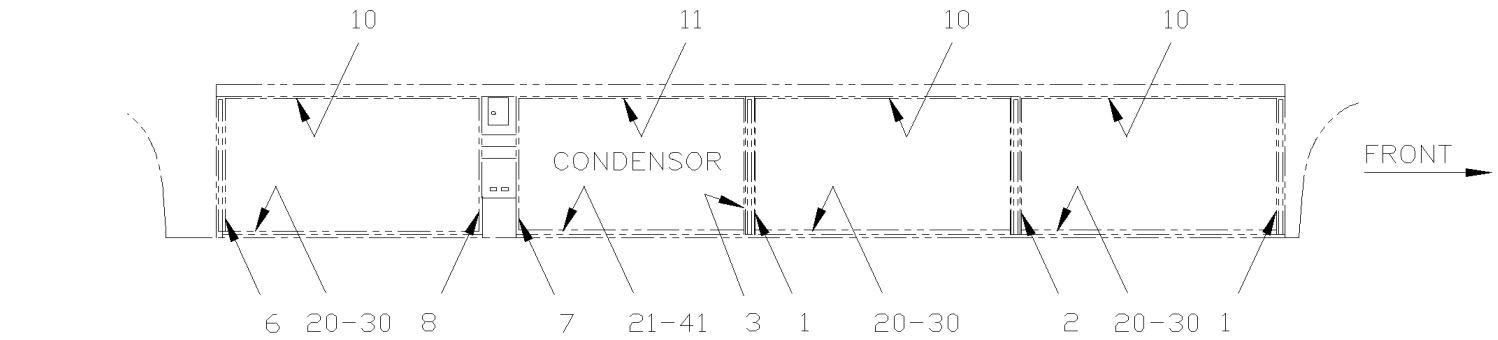

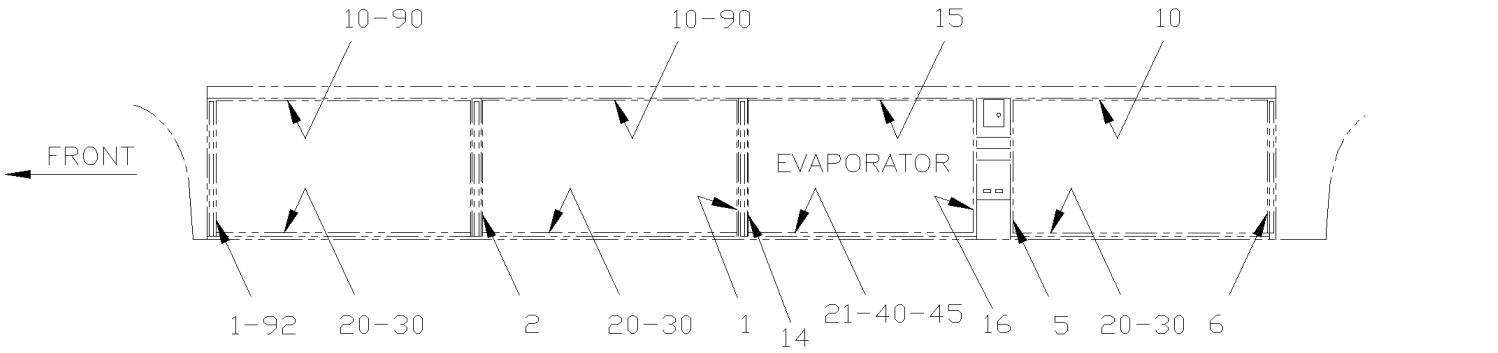

MTH 45' WITH LARGE A/C SYSTEM

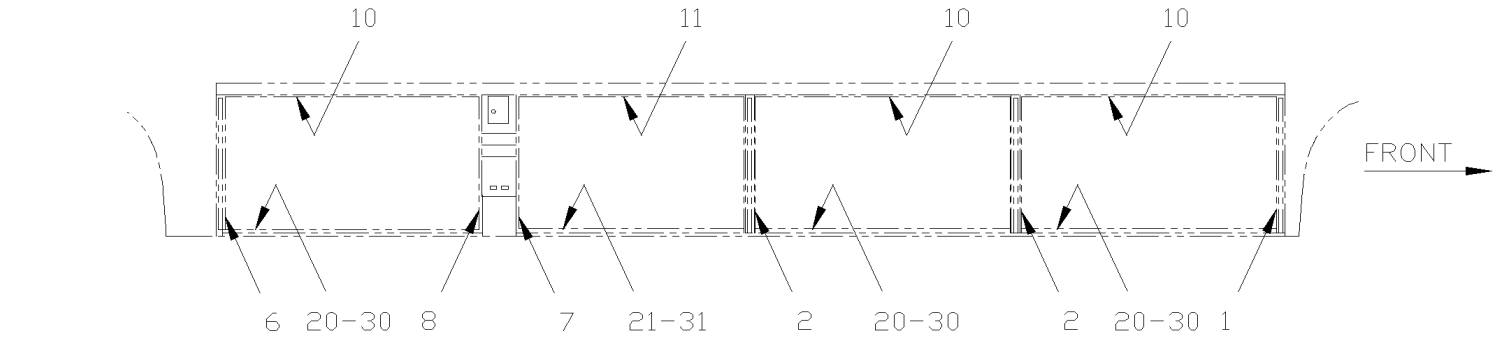

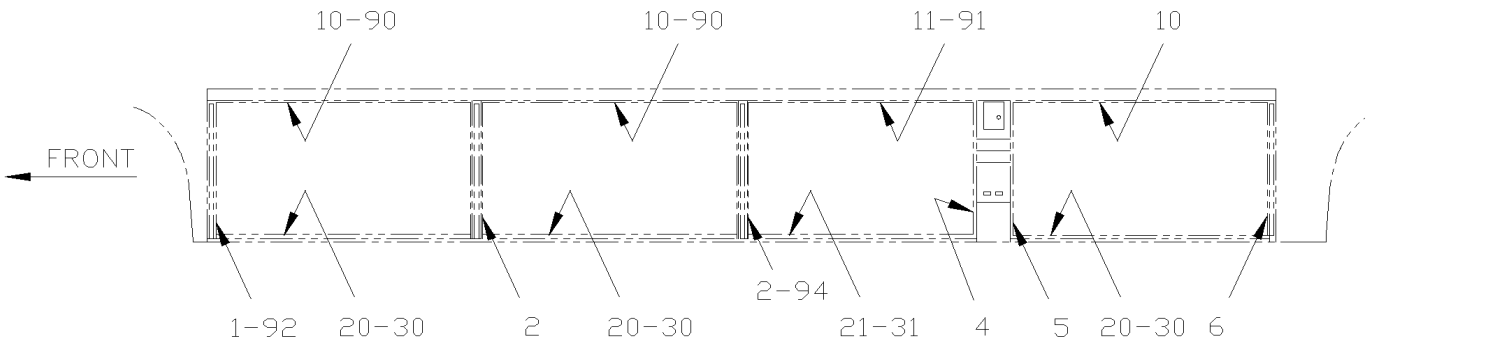

MTH 45' WITH SMALL A/C SYSTEM

From Y-7046 To 8-9339		Date:07/2024	PAGE:Y2-1854-20
WEATHERSTRIP & RETAINER - MTH			

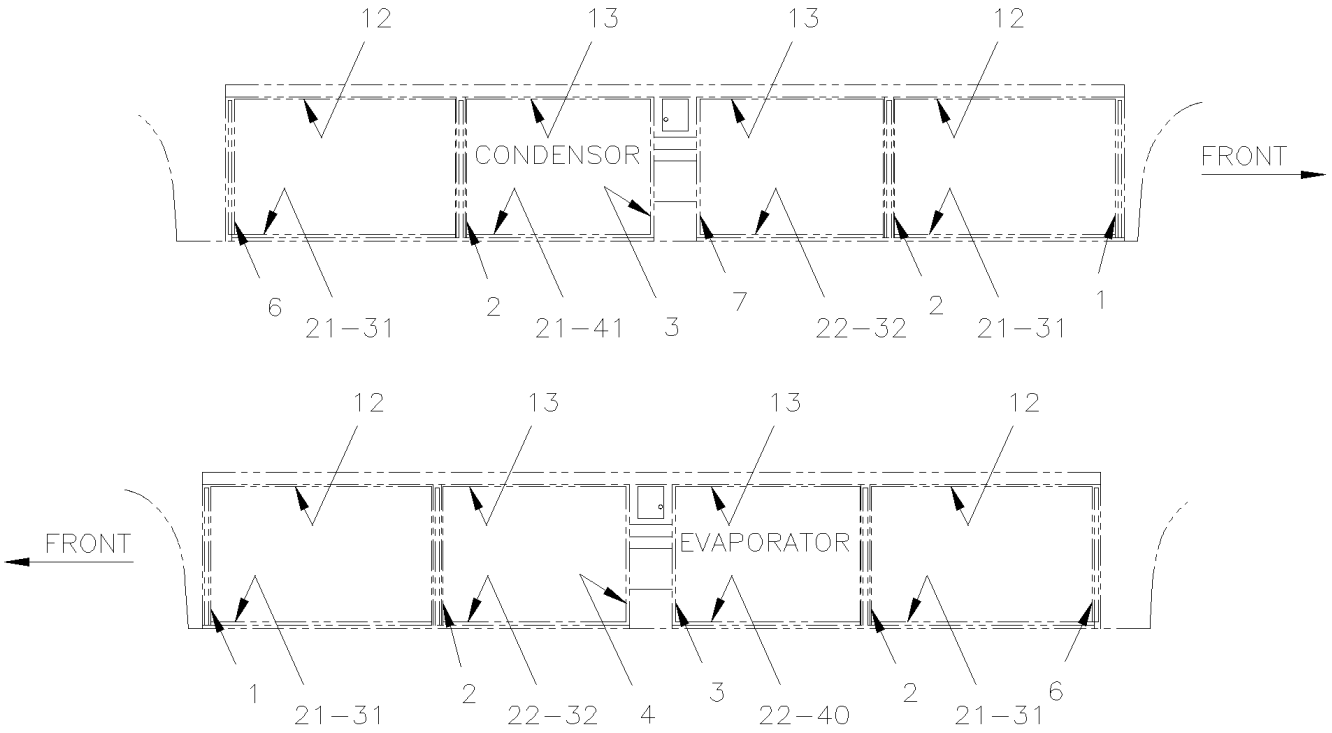

MTH 40' WITH LARGE A/C SYSTEM

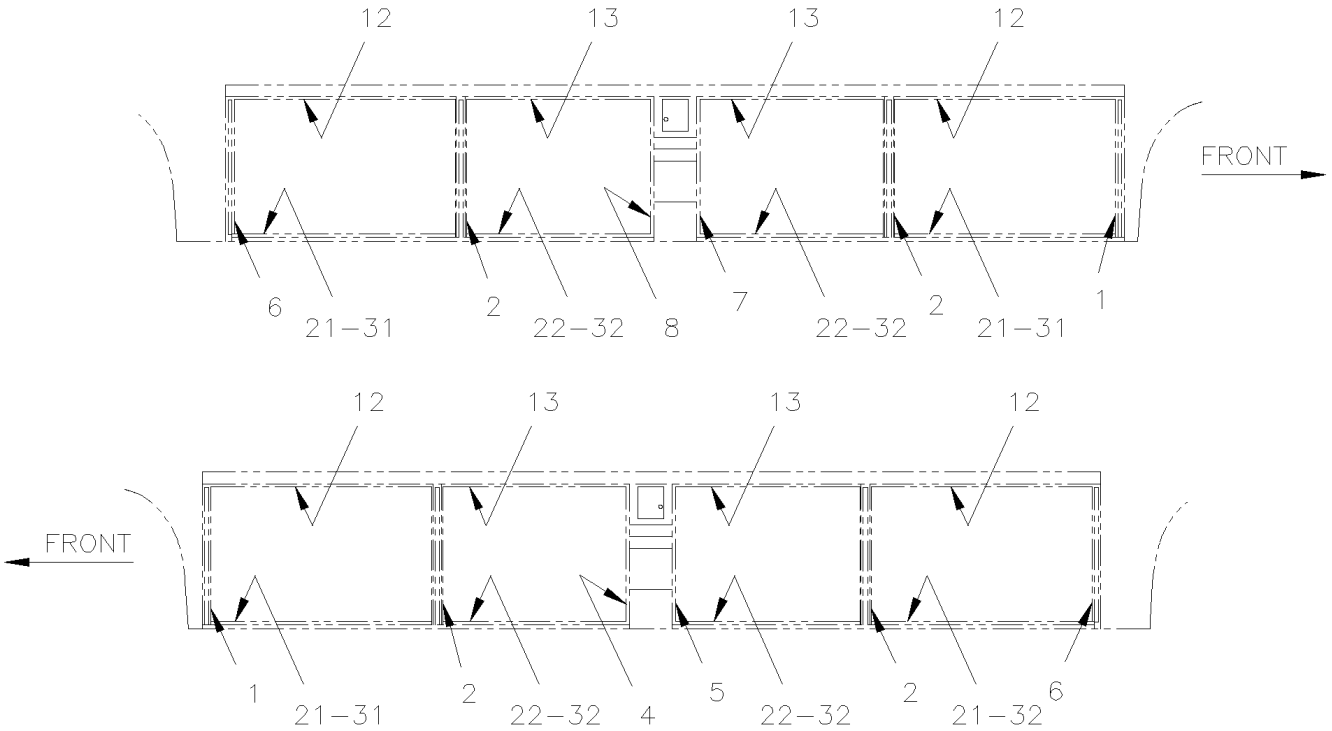

MTH 40' WITH SMALL A/C SYSTEM

From Y-7046 To 8-9339		Date:07/2024	PAGE:Y2-1854-20
WEATHERSTRIP & RETAINER - MTH			

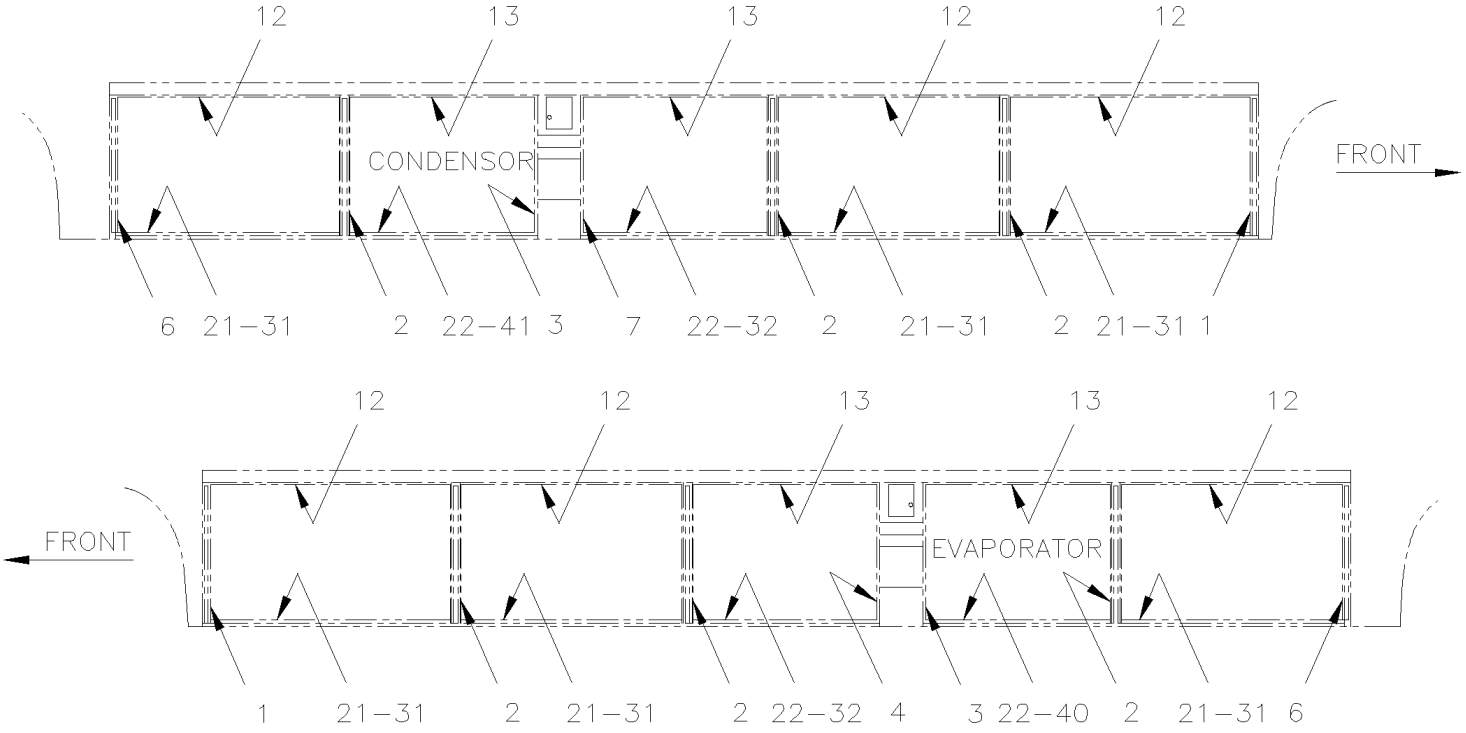

MTH 45' ENT. WITH LARGE A/C SYSTEM

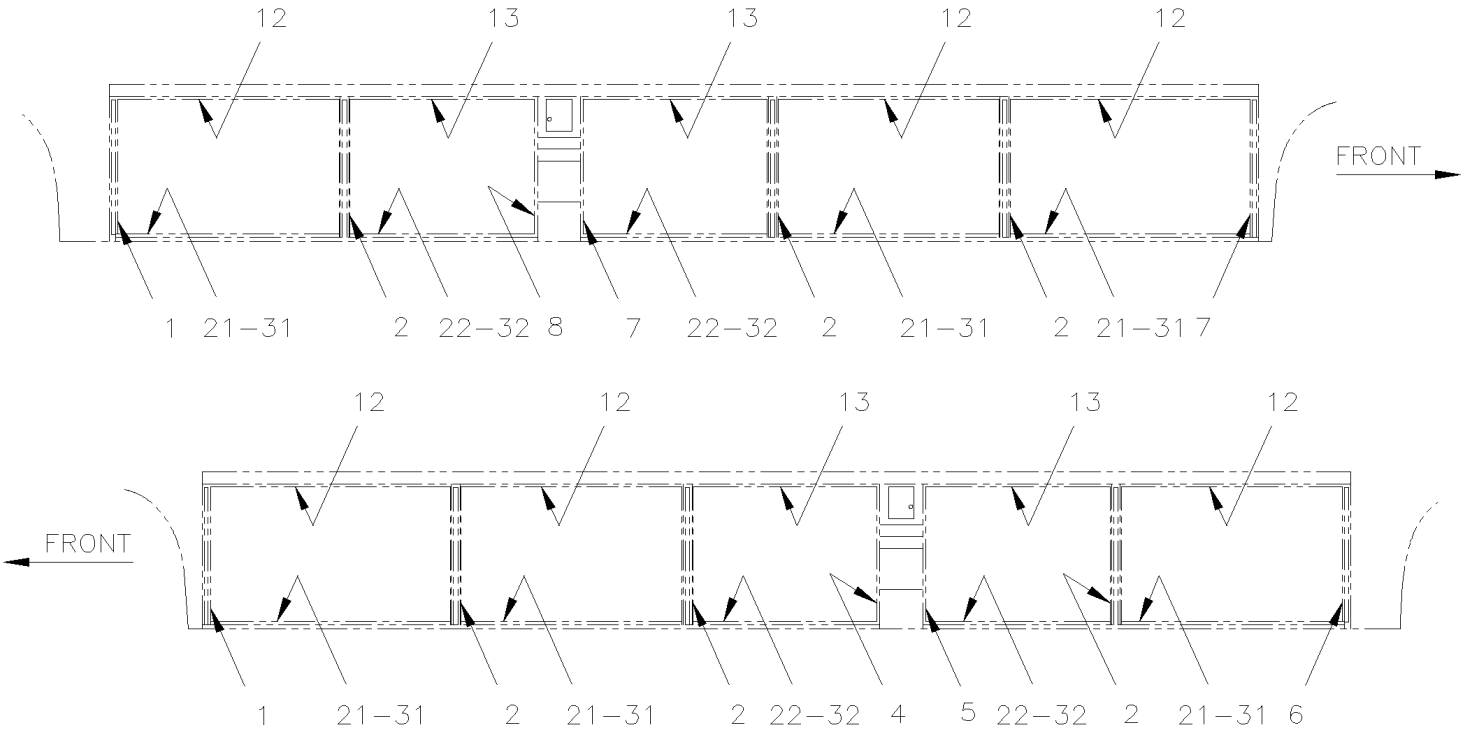

MTH 45' ENT. WITH SMALL A/C SYSTEM

From Y-7046 To 8-9339		Date:07/2024	PAGE:Y2-1854-20
WEATHERSTRIP & RETAINER - MTH			

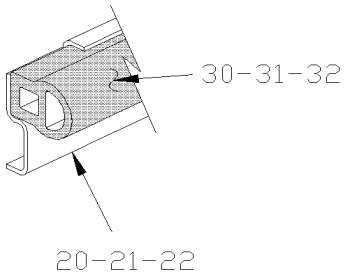

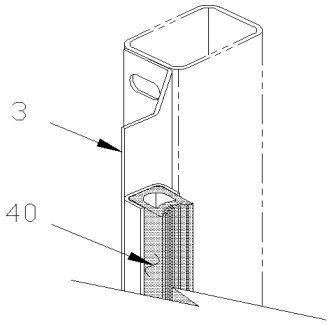

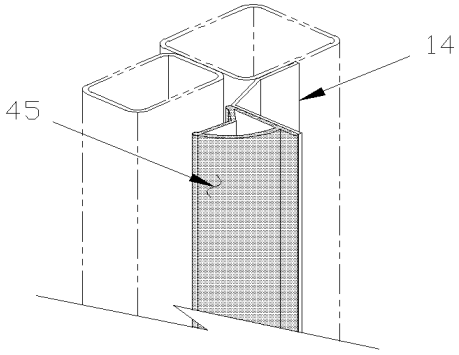

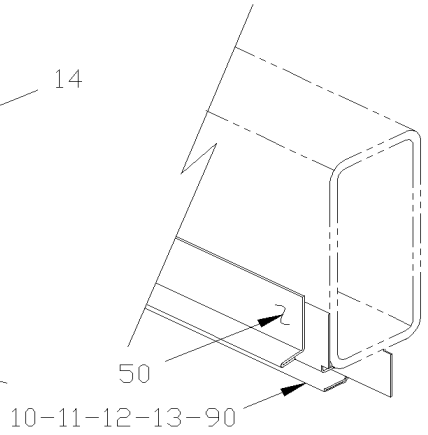

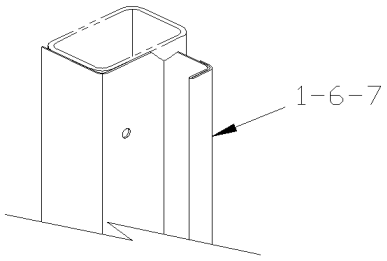

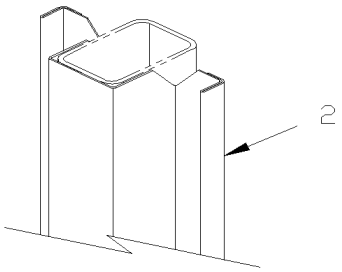

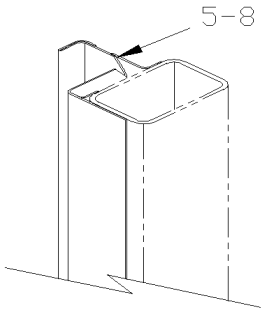

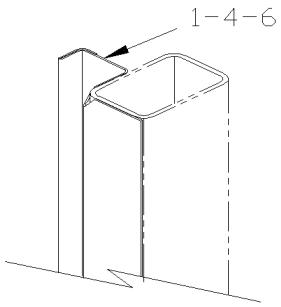

From Y-7046 To 8-9339		Date:07/2024	PAGE:Y2-1854-20

WEATHERSTRIP & RETAINER - MTH

Item#	Part	Description	XLII 45	XLII MTH40	XLII MTH45	XLII MTH45E	NOTES
1	482222	MOULDING / WEATHERSTRIP RETAINER FRONT		2		2	
1	482222	MOULDING / WEATHERSTRIP RETAINER FRONT			4		
2	480979	MOULDING / WEATHERSTRIP RETAINER / DOUBLE TWO BAGGAGE DOOR To 5-8813		4			
2	480979	MOULDING / WEATHERSTRIP RETAINER / DOUBLE TWO BAGGAGE DOOR			2		
2	480979	MOULDING / WEATHERSTRIP RETAINER / DOUBLE TWO BAGGAGE DOOR				6	
3	482137	MOULDING / WEATHERSTRIP RETAINER		1		1	
3	483709	MOULDING / WEATHERSTRIP RETAINER / W/FRONT "SLIDE-OUT" From 2-7871			1		
4	481013	MOULDING / WEATHERSTRIP RETAINER 838MM		1		1	
5	481269	MOULDING / WEATHERSTRIP RETAINER / L.H. / 838MM		1	1	1	
6	482824	MOULDING / WEATHERSTRIP RETAINER 838MM		2	2	2	
7	481255	MOULDING / WEATHERSTRIP RETAINER 838MM		1	1	1	
8	481270	MOULDING / WEATHERSTRIP RETAINER / R.H. / 838MM		1	1	1	
10	473702	MOULDING / WEATHERSTRIP RETAINER 1543MM			6		
11	473701	MOULDING / WEATHERSTRIP RETAINER 1365MM To 2-7763			1		
11	475153	MOULDING / WEATHERSTRIP RETAINER 1365MM From 2-7764			1		
12	473704	MOULDING / WEATHERSTRIP RETAINER 1371MM To 5-8813		4			
12	473704	MOULDING / WEATHERSTRIP RETAINER 1371MM				6	
13	473703	MOULDING / WEATHERSTRIP RETAINER 1155MM		4		4	
13	474869	MOULDING / WEATHERSTRIP RETAINER 990MM				1	A
14	482137	MOULDING / WEATHERSTRIP RETAINER To 2-7763			1		
14	214684	SEAL DOOR RETAINER / FORWARD DOOR From 2-7764			1		
15	473701	MOULDING / WEATHERSTRIP RETAINER 1365MM To 2-7763			1		
15	214683	SEAL DOOR RETAINER / UPPER DOOR From 2-7764			1		
16	481013	MOULDING / WEATHERSTRIP RETAINER 838MM To 2-7763			1		
16	214682	SEAL DOOR RETAINER / BACKWARD DOOR From 2-7764			1		
20	483029	MOULDING / WEATHERSTRIP RETAINER / WELDED TO STRUCTURE / 1536MM			1		
21	483031	MOULDING / WEATHERSTRIP RETAINER / WELDED TO STRUCTURE / 1365MM To 5-8813		1			
21	483031	MOULDING / WEATHERSTRIP RETAINER / WELDED TO STRUCTURE / 1365MM			1		
21	483031	MOULDING / WEATHERSTRIP RETAINER / WELDED TO STRUCTURE / 1365MM				1	
21	483711	MOULDING / WEATHERSTRIP RETAINER / WELDED TO STRUCTURE / 1326MM To 5-8813		1			B
22	483030	MOULDING / WEATHERSTRIP RETAINER / WELDED TO STRUCTURE / 1149MM		1		1	
22	483693	MOULDING / WEATHERSTRIP RETAINER / WELDED TO STRUCTURE / 1107MM To 5-8813		1			B
30	481988	WEATHERSTRIP / W/60" BAGGAGE DOORS			6		
30	485628	WEATHERSTRIP / W/60" BAGGAGE DOORS			6		
30	482330	WEATHERSTRIP / W/60" HINGE BAGGAGE DOOR			AR		
30	485631	WEATHERSTRIP / W/60" HINGE BAGGAGE DOOR			AR		
31	481033	WEATHERSTRIP / W/53" BAGGAGE DOORS To 5-8813		4			
31	485635	WEATHERSTRIP / W/53" BAGGAGE DOORS		4			
31	481033	WEATHERSTRIP / W/53" BAGGAGE DOORS			2		
31	485635	WEATHERSTRIP / W/53" BAGGAGE DOORS			2		
31	481033	WEATHERSTRIP / W/53" BAGGAGE DOORS				6	
31	485635	WEATHERSTRIP / W/53" BAGGAGE DOORS				6	

From Y-7046 To 8-9339		Date:07/2024	PAGE:Y2-1854-20

WEATHERSTRIP & RETAINER - MTH

Item#	Part	Description	XLII 45	XLII MTH40	XLII MTH45	XLII MTH45E	NOTES
31	483462	WEATHERSTRIP / W/53" HINGE BAGGAGE DOOR		AR	AR	AR	
31	485632	WEATHERSTRIP / W/53" HINGE BAGGAGE DOOR		AR	AR	AR	
32	482462	WEATHERSTRIP / W/45" BAGGAGE DOORS To 5-8813		4			
32	485630	WEATHERSTRIP / W/45" BAGGAGE DOORS		4		4	
32	483692	WEATHERSTRIP / W/45" HINGE BAGGAGE DOOR To 5-8813		AR		AR	
33	480154	. WEATHERSTRIP RUBBER / ADH / RAW MATERIAL To 5-8844		AR	AR	AR	
33	483941	. WEATHERSTRIP RUBBER / ADH / RAW MATERIAL From 5-8545		AR	AR	AR	
33	485610	. WEATHERSTRIP RUBBER / ADH / RAW MATERIAL		AR	AR	AR	
40	481163	WEATHERSTRIP / EVAPORATOR DOOR		1		1	
40	482096	WEATHERSTRIP / EVAPORATOR DOOR To 2-7763			1		
41	482099	WEATHERSTRIP / CONDENSOR DOOR		1	1	1	
41	480009	WEATHERSTRIP / CONDENSOR DOOR		1	1	1	
45	483555	WEATHERSTRIP / EVAPORATOR DOOR From 2-7764			1		
50	**Y2-1854-50**	**SIDE PANELS - MTH**					
90	475246	MOULDING / WEATHERSTRIP RETAINER From 2-7764 To 3-8109			1		C
90	475767	MOULDING / WEATHERSTRIP RETAINER 1495MM From 3-8110			1		C
90	478265	MOULDING / WEATHERSTRIP RETAINER 1488MM OPTION From 2-7764			6		C E
91	475265	MOULDING / WEATHERSTRIP RETAINER 1320MM From 2-7764			1		D
92	475297	MOULDING / WEATHERSTRIP RETAINER From 2-7764 To 3-8109			1		C
92	476077	MOULDING / WEATHERSTRIP RETAINER From 3-8110			1		C
94	475272	MOULDING / WEATHERSTRIP RETAINER From 2-7764 To 3-8109			1		B
94	475764	MOULDING / WEATHERSTRIP RETAINER From 3-8110			1		B
		A) USE WITH 38" BAGGAGE DOOR					
		B) WITH "SLIDE OUT"					
		C) WITH BAGGAGE DOOR WITH HINGE FOR "SLIDE-OUT"					
		D) WITH BAGGAGE DOOR WITH HINGE FOR "SLIDE-OUT" AND SMALL A/C					
		E) WITH 6 DOORS HINGED 60" FOR SLIDE OUT					

From Y-7046 To 8-9339		Date:07/2024	PAGE:Y2-1854-50
SIDE PANELS - MTH			

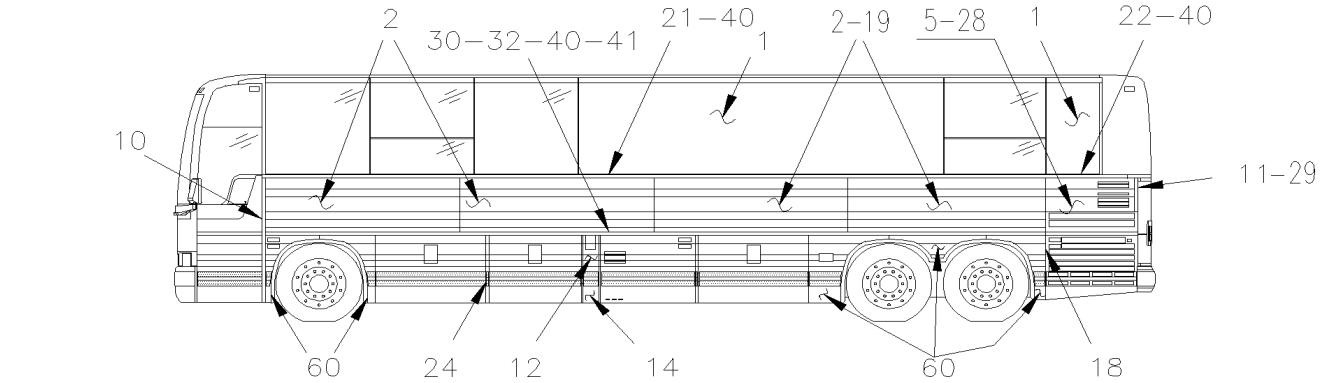

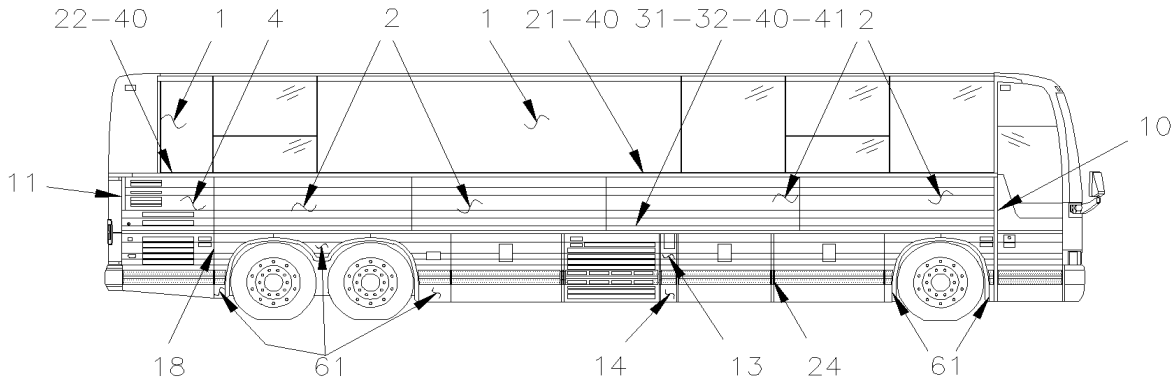

MTH. 40'

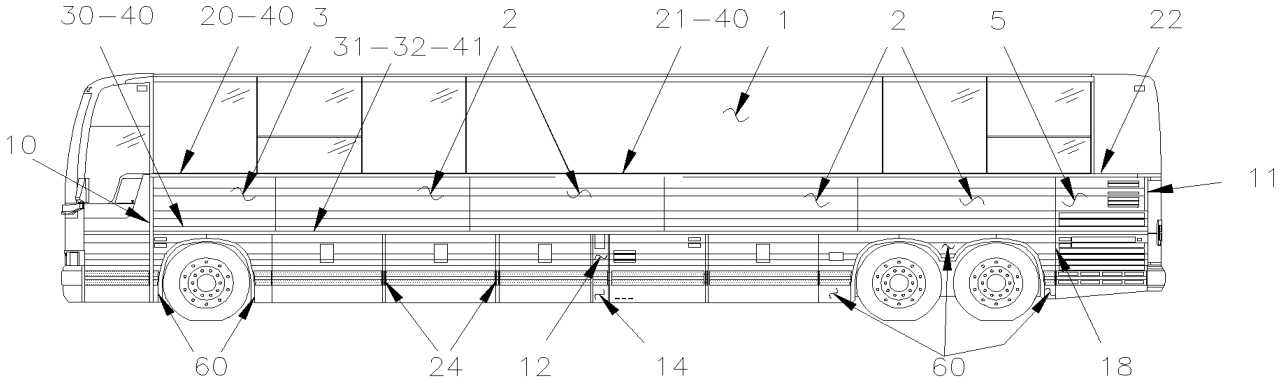

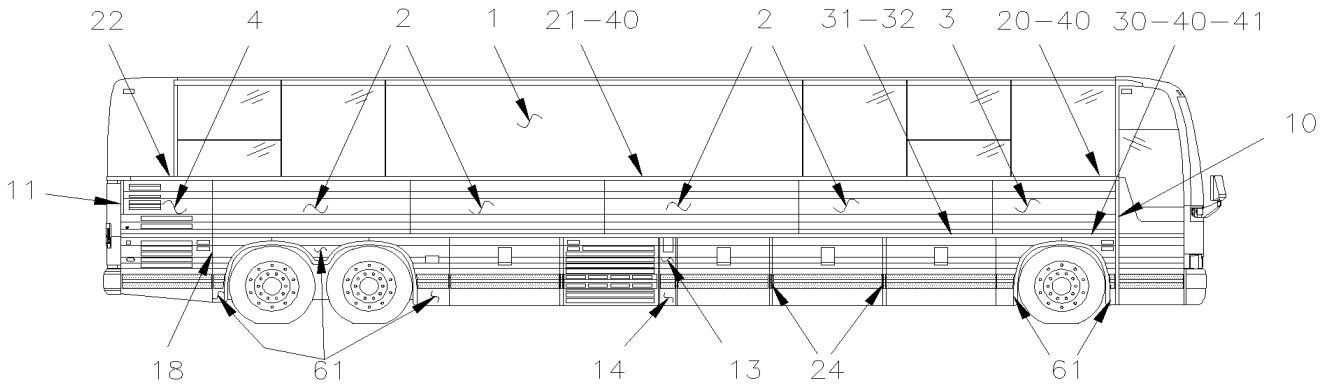

MTH 45' ENT.

From Y-7046 To 8-9339		Date:07/2024	PAGE:Y2-1854-50
SIDE PANELS - MTH			

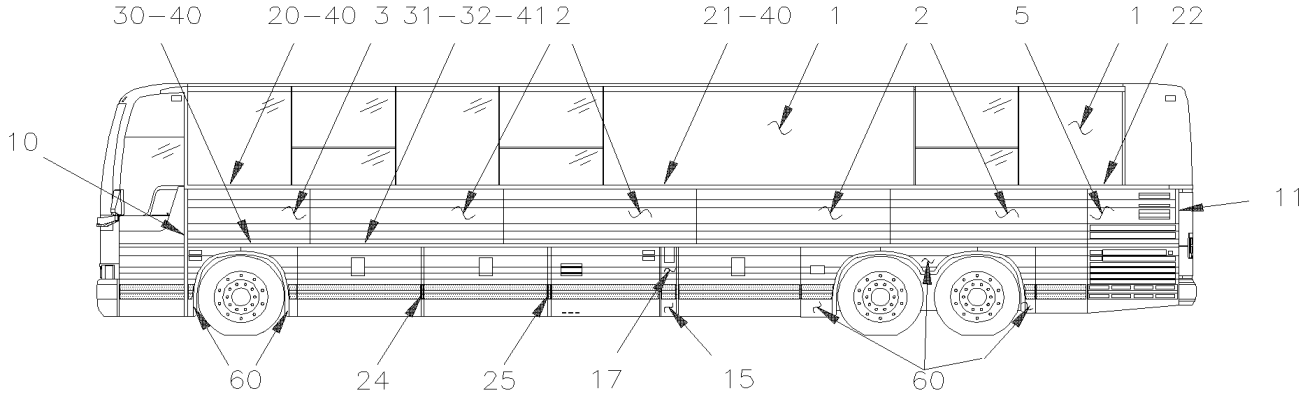

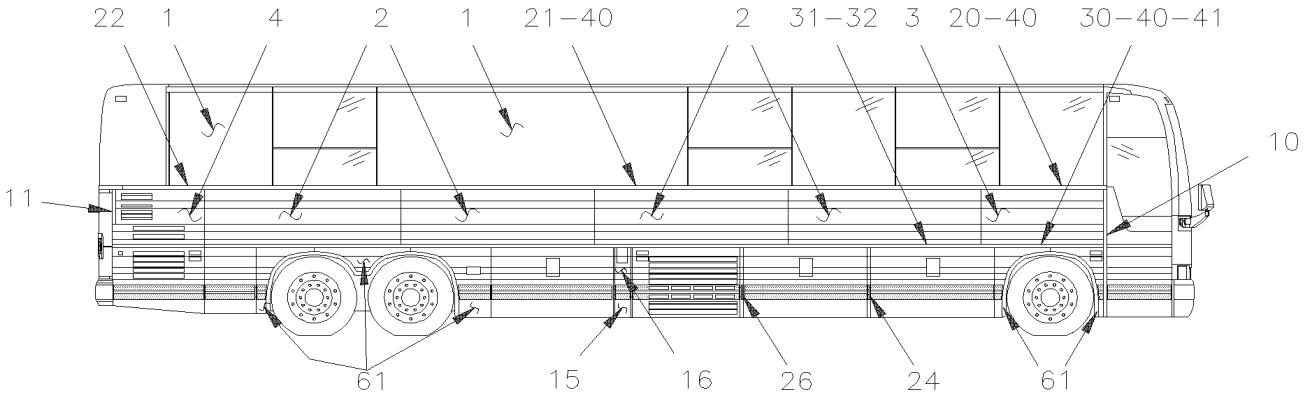

MTH. 45'

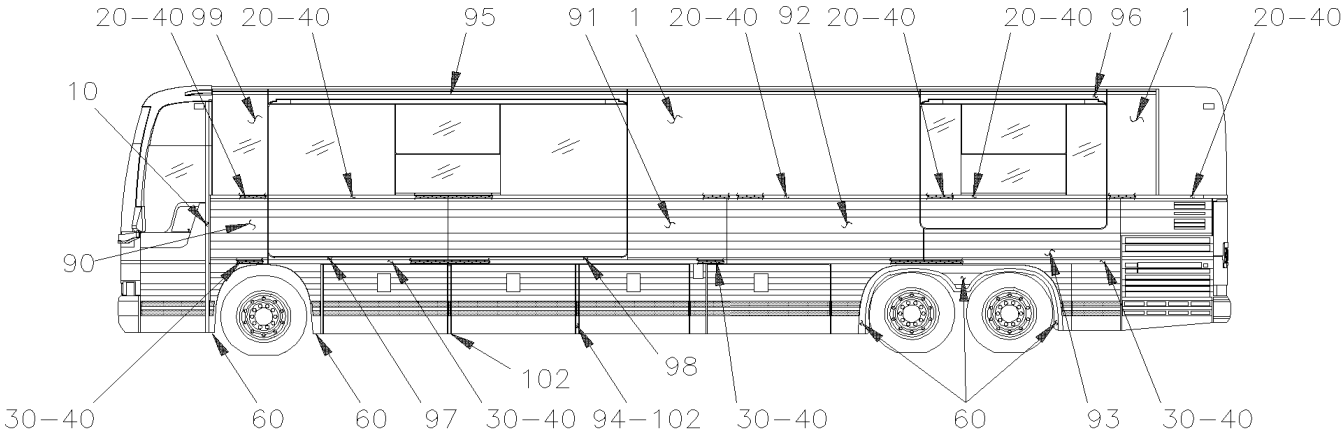

MTH. 45' WITH "SLIDE−OUT"
UP TO 3−8164

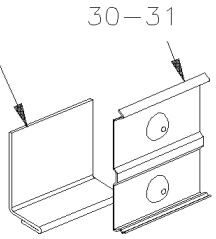

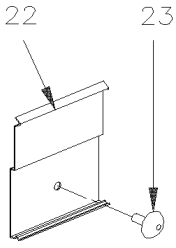

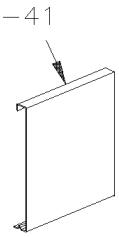

From Y-7046 To 8-9339		Date:07/2024	PAGE:Y2-1854-50
SIDE PANELS - MTH			

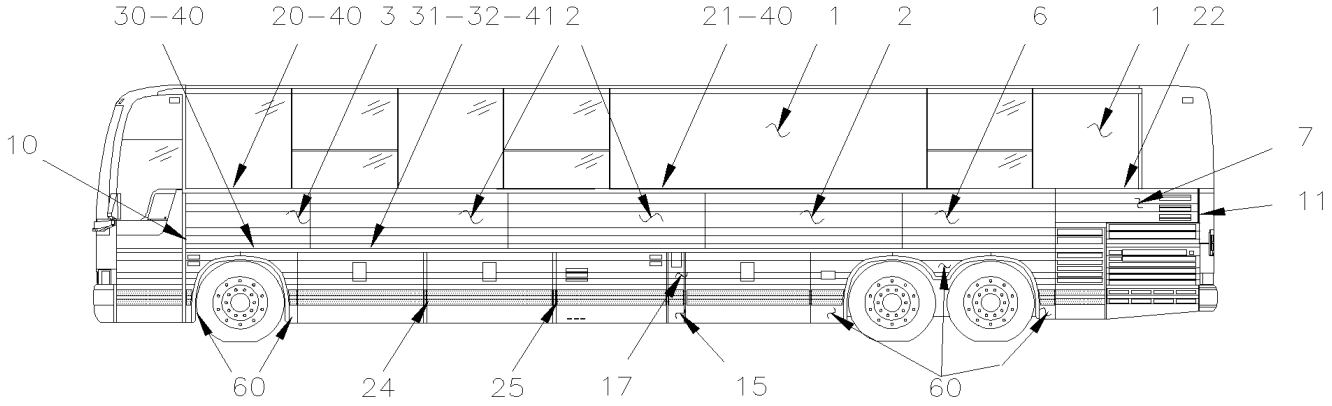

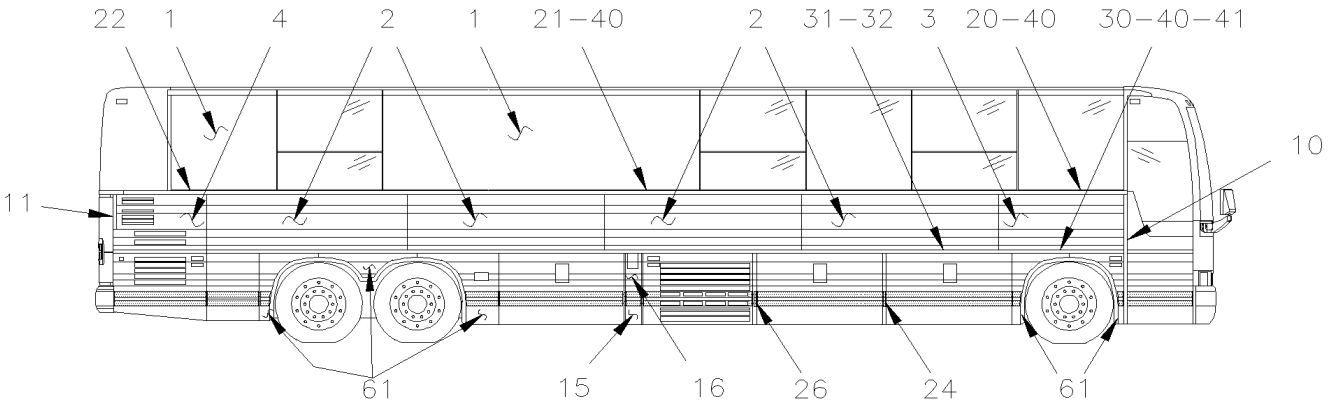

MTH. 45'

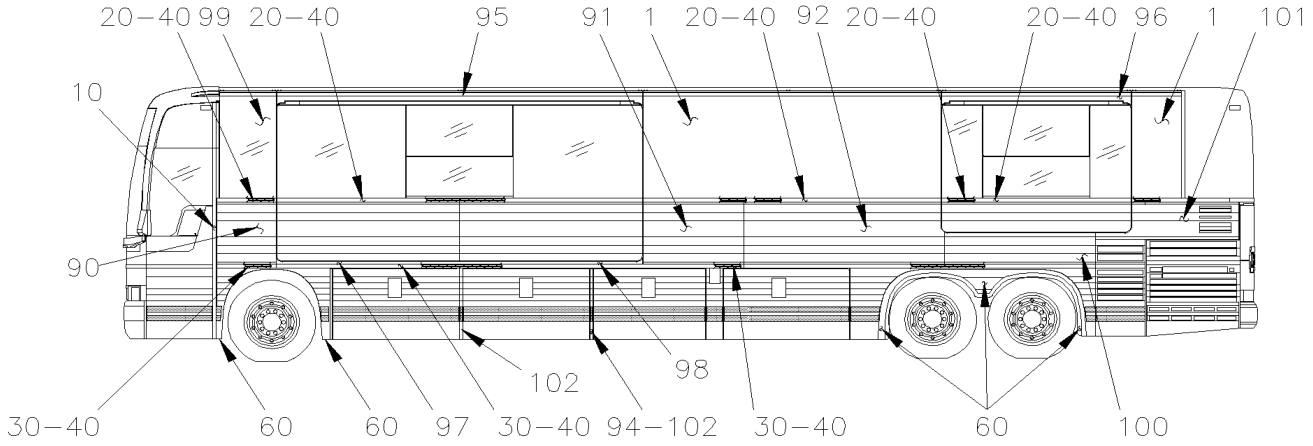

MTH. 45' WITH "SLIDE−OUT"
FROM 4−8165

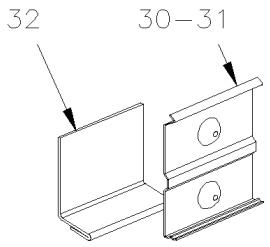

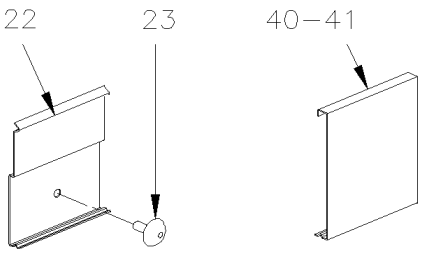

From Y-7046 To 8-9339		Date:07/2024	PAGE:Y2-1854-50
SIDE PANELS - MTH			

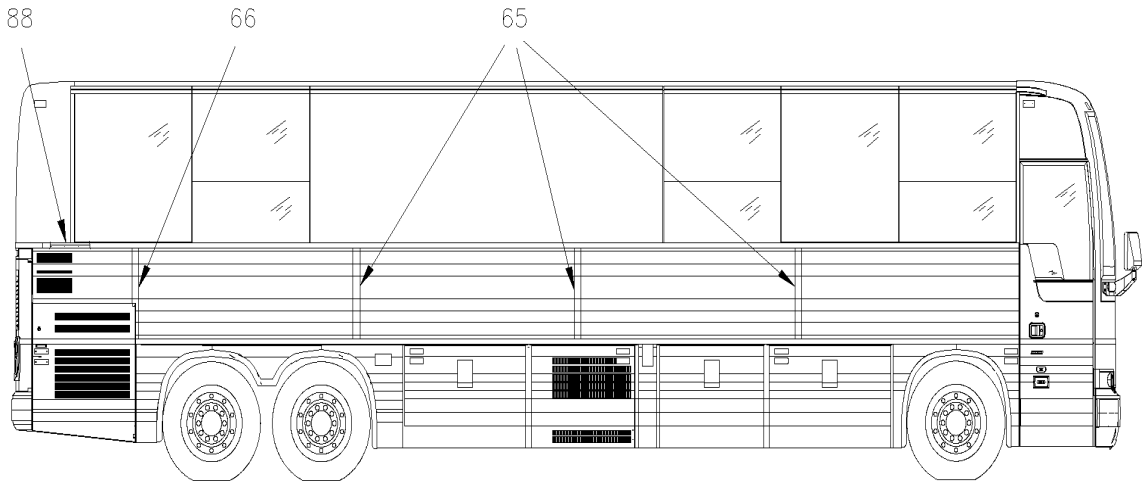

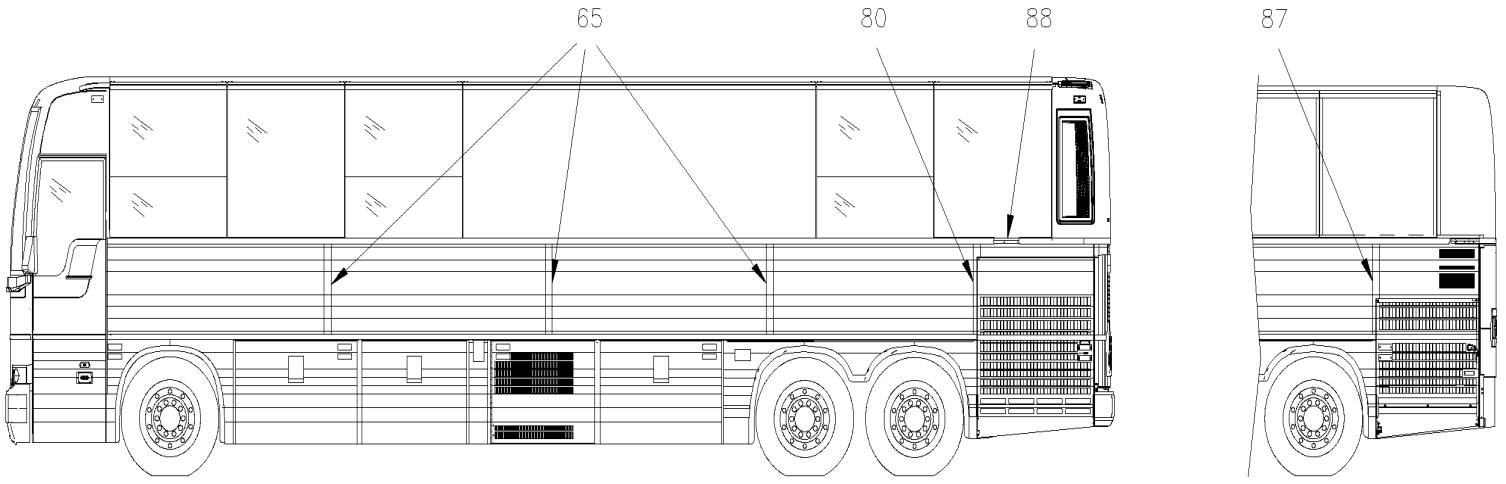

MTH-40

From Y-7046 To 8-9339		Date:07/2024	PAGE:Y2-1854-50
SIDE PANELS - MTH			

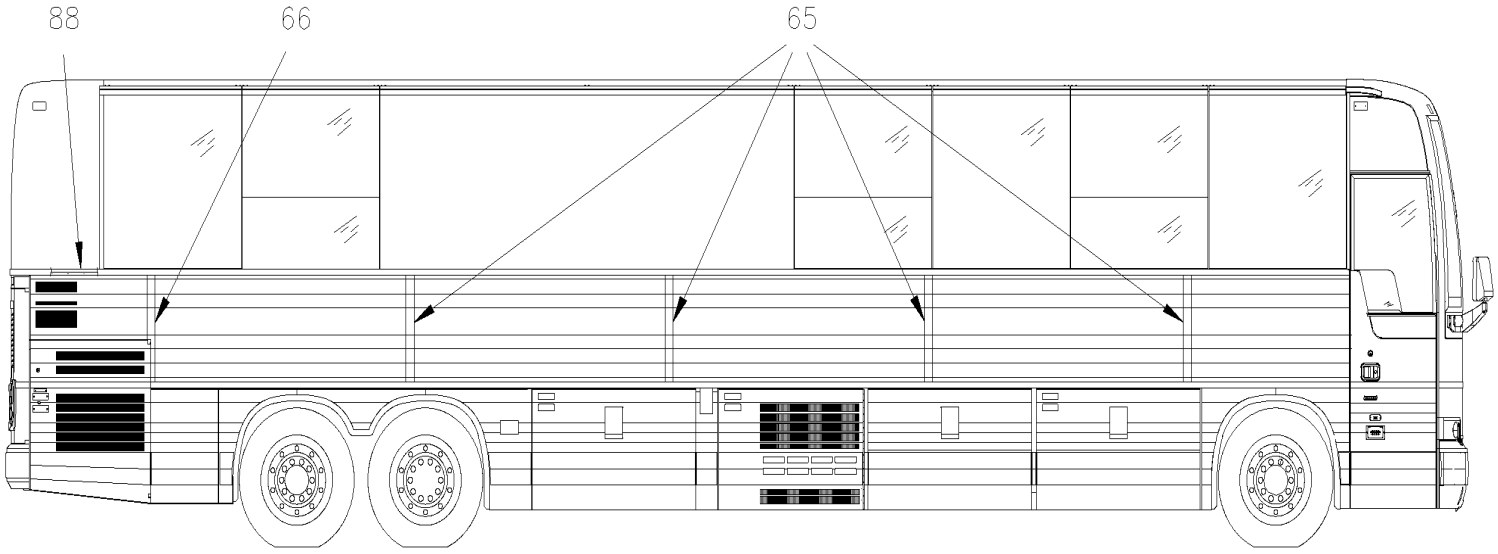

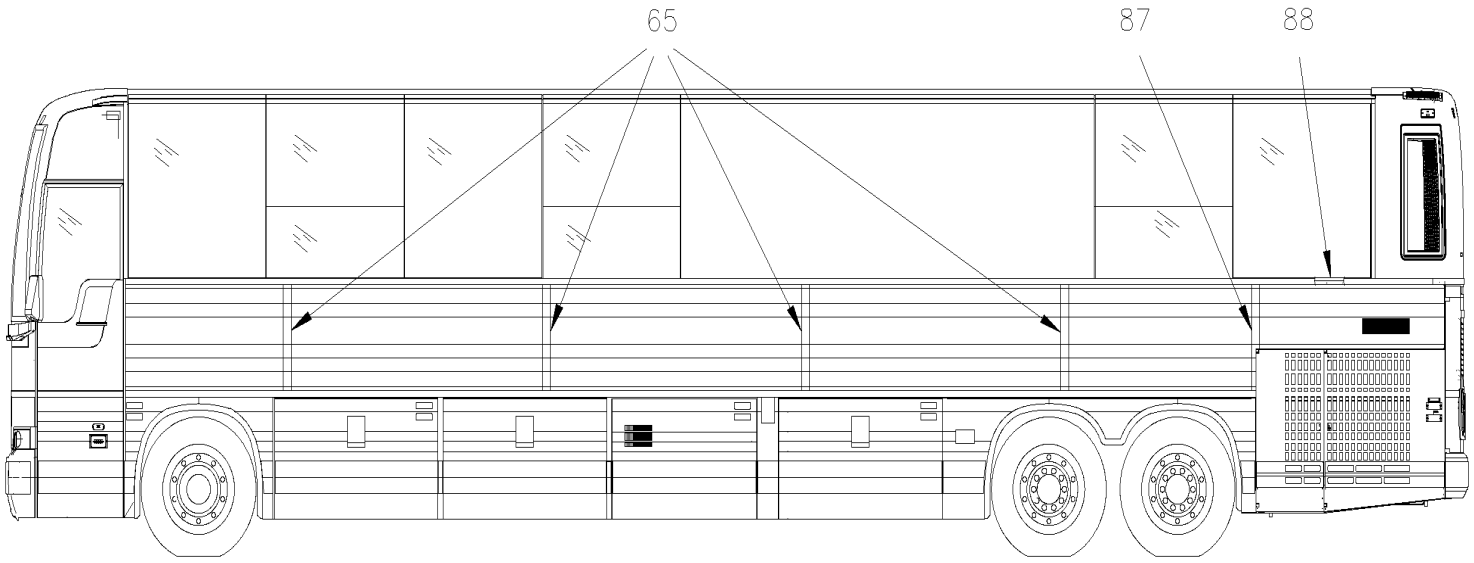

MTH-45 WITHOUT SLIDE-OUT

From Y-7046 To 8-9339		Date:07/2024	PAGE:Y2-1854-50
SIDE PANELS - MTH			

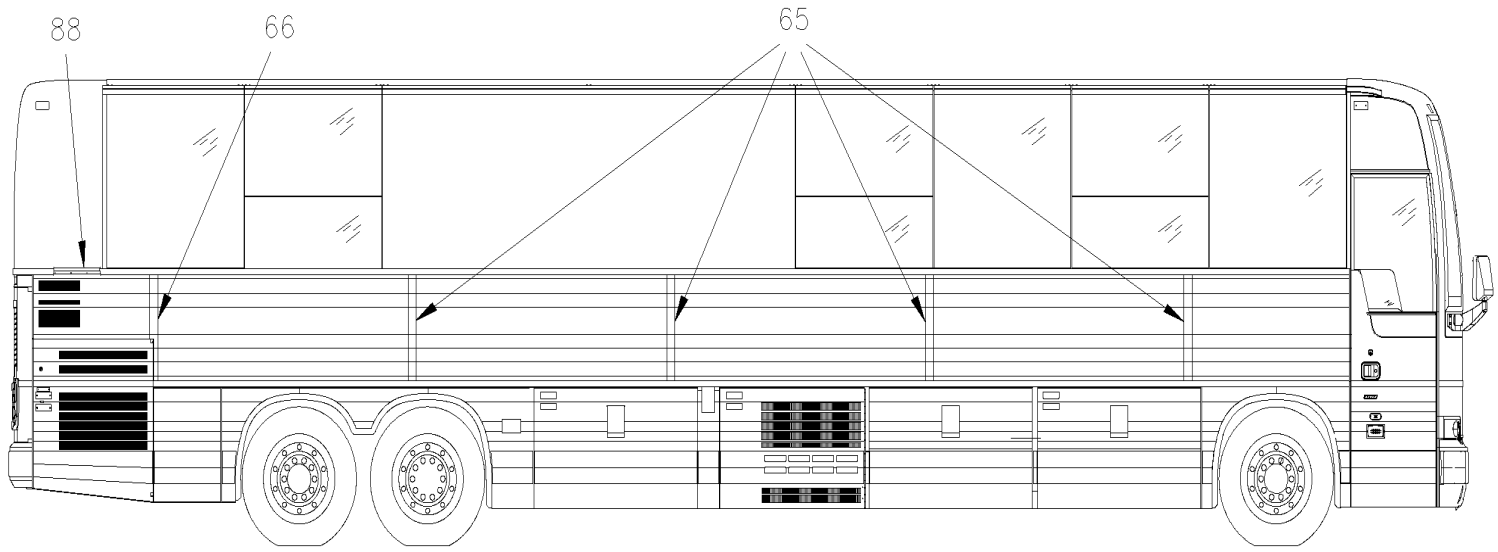

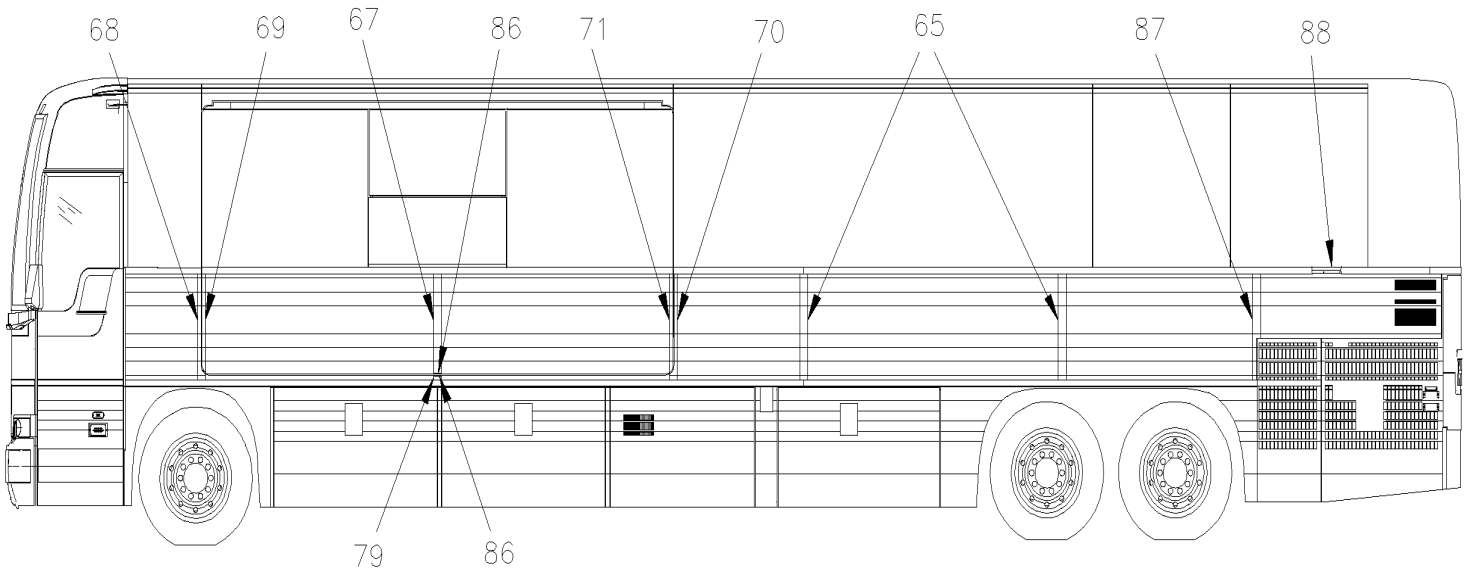

MTH-45 WITH FRONT SLIDE-OUT

From Y-7046 To 8-9339		Date:07/2024	PAGE:Y2-1854-50
SIDE PANELS - MTH			

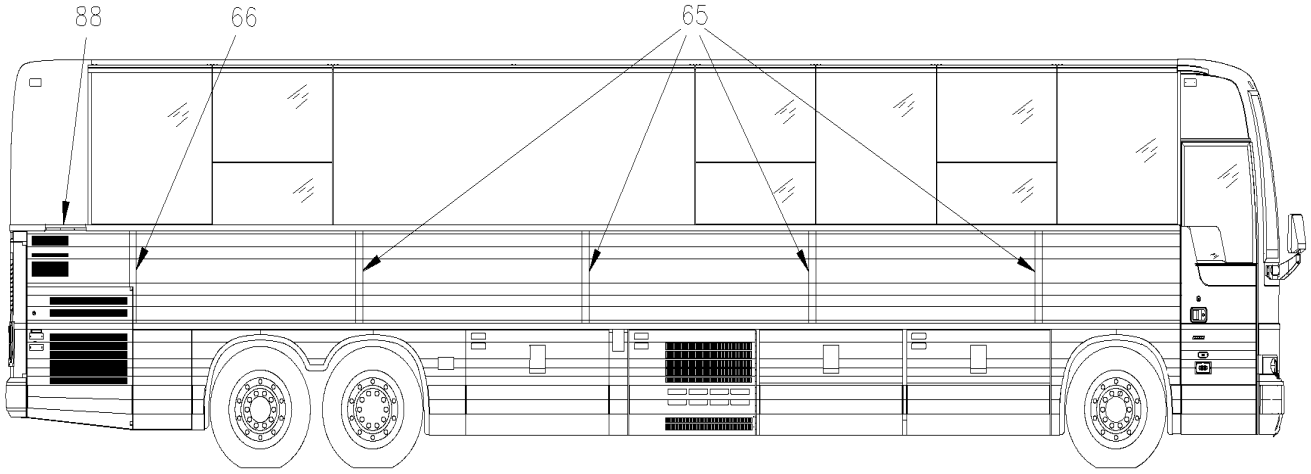

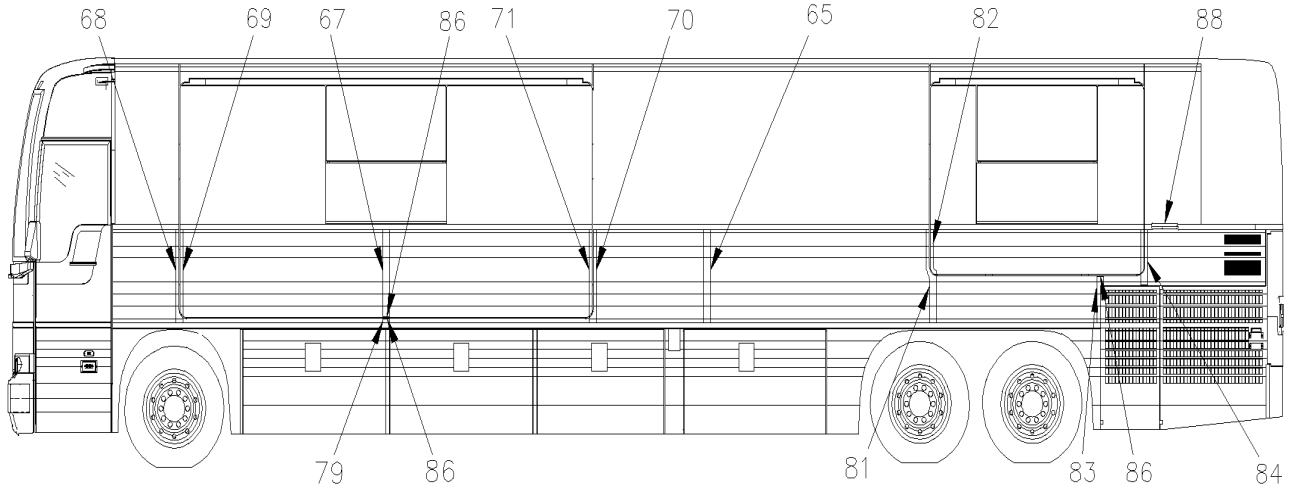

MTH-45 WITH FRONT SLIDE OUT
& REAR SLIDE-OUT
UP TO 6-8805

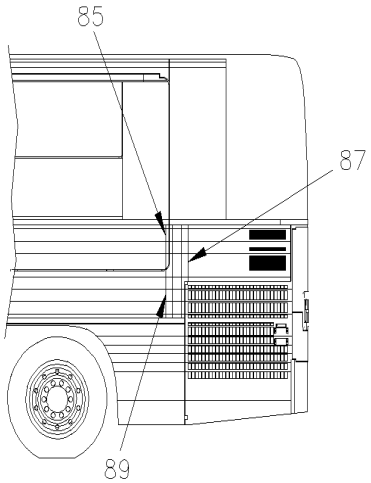

From Y-7046 To 8-9339		Date:07/2024	PAGE:Y2-1854-50
SIDE PANELS - MTH			

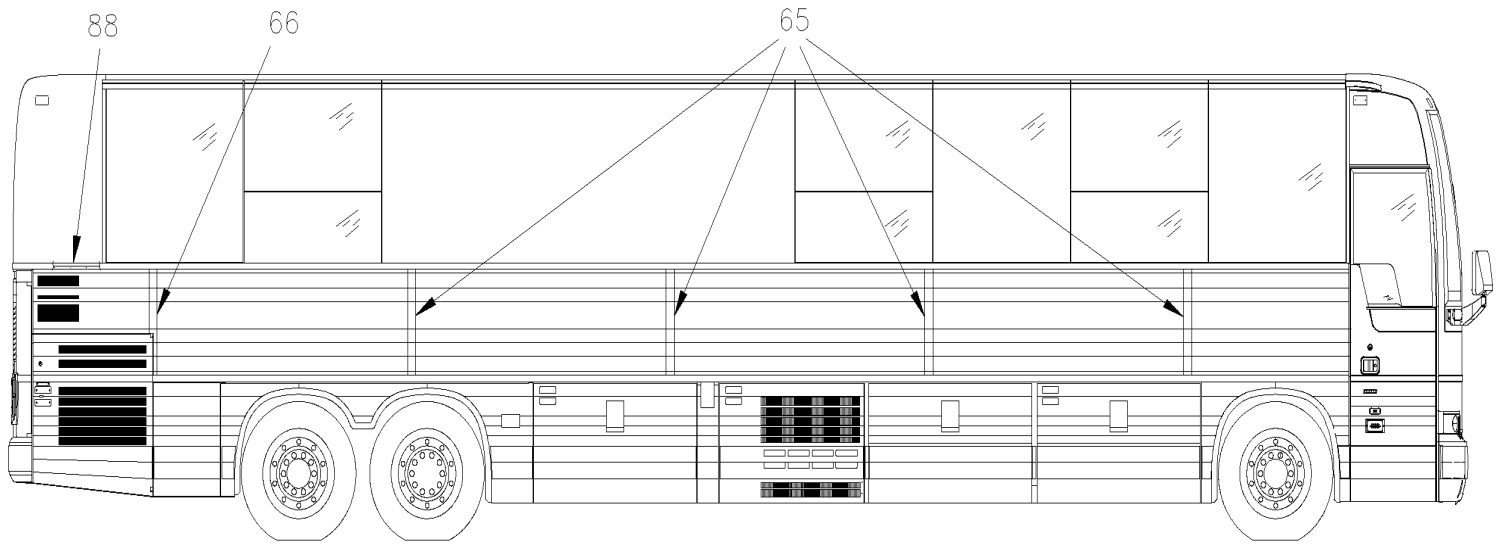

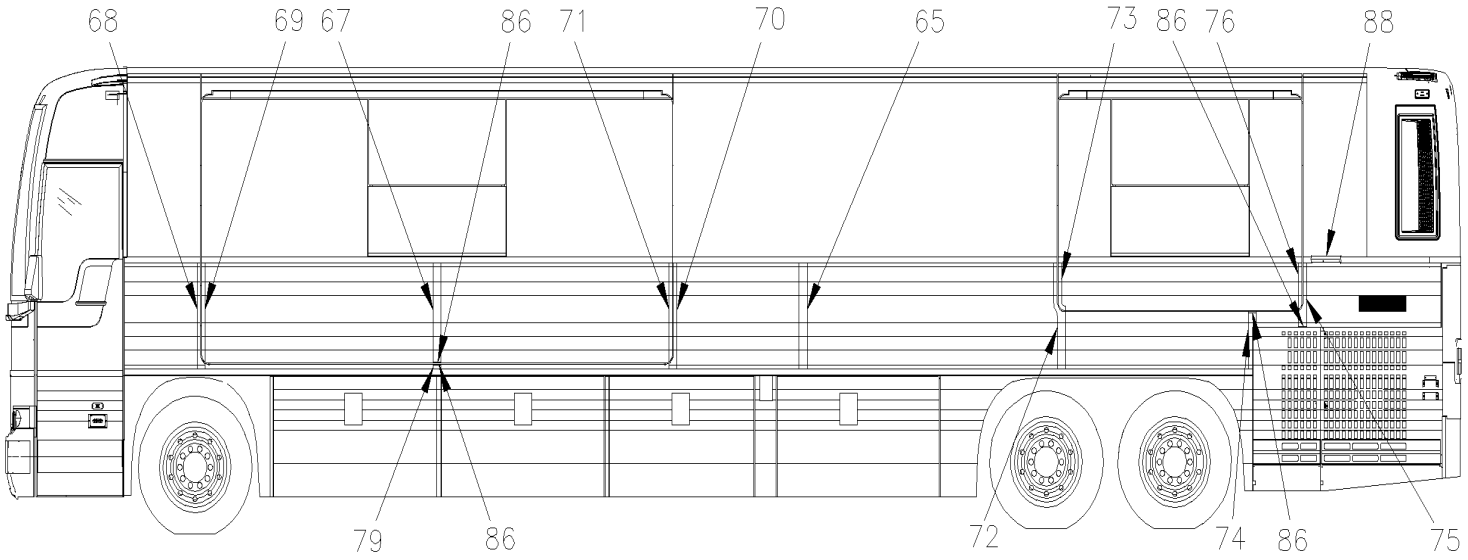

MTH-45 WITH FRONT SLIDE-OUT
& 7.5' REAR SLIDE-OUT
FROM 6-8806

From Y-7046 To 8-9339		Date:07/2024	PAGE:Y2-1854-50
SIDE PANELS - MTH			

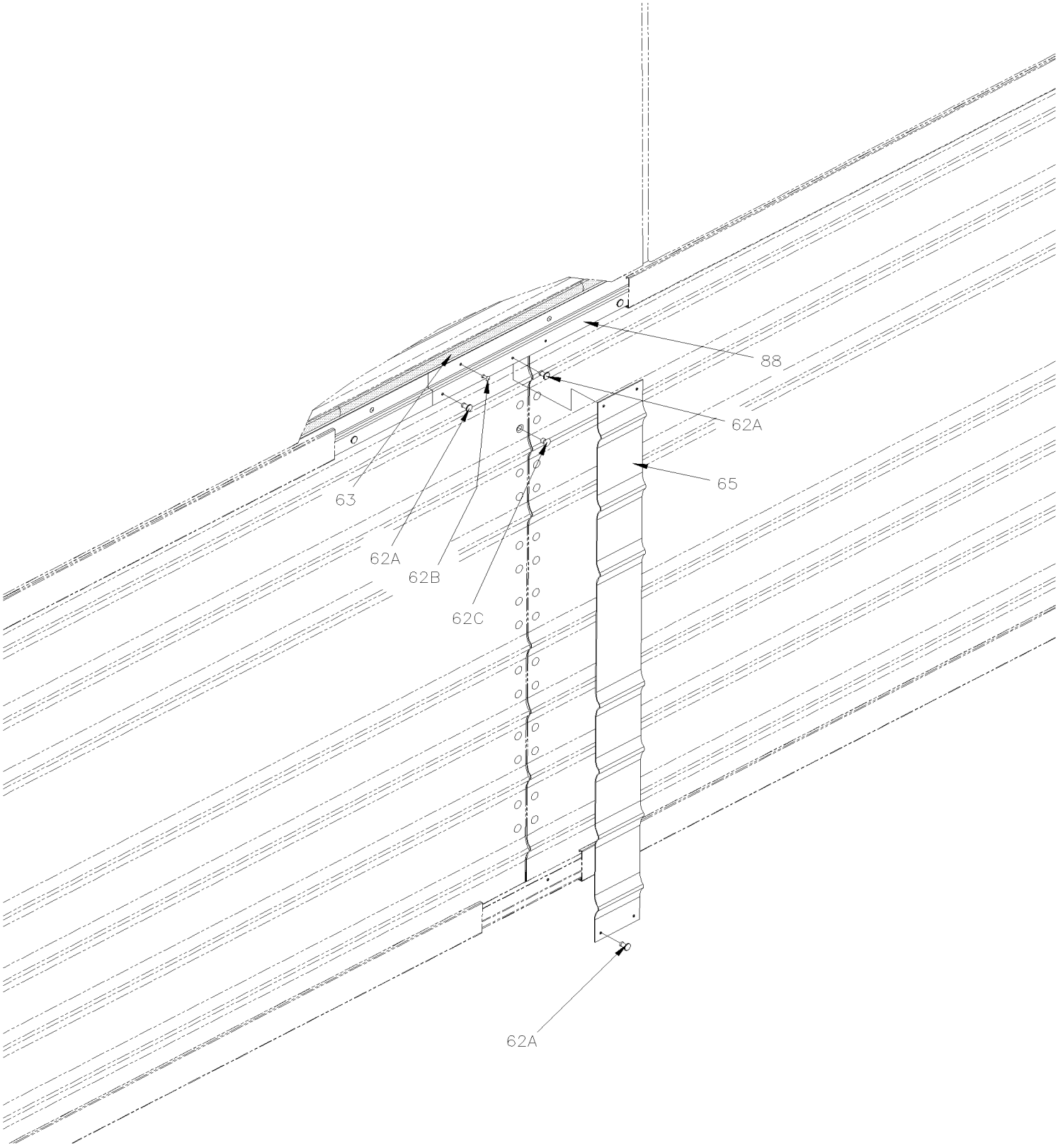

From Y-7046 To 8-9339		Date:07/2024	PAGE:Y2-1854-50

SIDE PANELS - MTH

Item#	Part	Description	XLII 45	XLII MTH40	XLII MTH45	XLII MTH45E	NOTES
1	474315	UPPER PANEL / MTH-83" 489.3MM To Y-7128		AR	AR		
1	474567	UPPER PANEL / MTH-83" 792MM To Y-7128		AR	AR		
1	474275	UPPER PANEL / MTH-83" 1287.4MM To Y-7128		AR	AR		
1	474180	UPPER PANEL / MTH-83" 2582.8MM To Y-7128		AR	AR		
1	474566	UPPER PANEL / MTH-83" 3078MM To Y-7128		AR	AR		
1	474179	UPPER PANEL / MTH-83" 3878.2MM To Y-7128		AR	AR		
1	474568	UPPER PANEL / MTH-83" 4373MM To Y-7128		AR	AR		
1	474314	UPPER PANEL / MTH-83" 4676.3MM To Y-7128		AR	AR		
1	474181	UPPER PANEL / MTH-83" 5176.6MM To Y-7128		AR	AR		
1	474421	UPPER PANEL / MTH-83" 6469MM To Y-7128		AR	AR		
1	475011	UPPER PANEL / MTH-86" & 89" 96MM		AR	AR	AR	
1	474660	UPPER PANEL / MTH-86" & 89" 195.2MM		AR	AR	AR	
1	476541	UPPER PANEL / MTH-86" & 89" 215MM		AR	AR	AR	
1	475479	UPPER PANEL / MTH-86" & 89" 271.4MM		AR	AR	AR	
1	475027	UPPER PANEL / MTH-86" & 89" 310MM		AR	AR	AR	
1	474851	UPPER PANEL / MTH-86" & 89" 328.6MM		AR	AR	AR	
1	475040	UPPER PANEL / MTH-86" & 89" 340.5MM		AR	AR	AR	
1	474655	UPPER PANEL / MTH-86" & 89" 399.5MM		AR	AR	AR	
1	474732	UPPER PANEL / MTH-86" & 89" 414.3MM		AR	AR	AR	
1	474591	UPPER PANEL / MTH-86" & 89" 423.8MM		AR	AR	AR	
1	475110	UPPER PANEL / MTH-86" & 89" 433.3MM		AR	AR	AR	
1	474465	UPPER PANEL / MTH-86" & 89" 489.3MM		AR	AR	AR	
1	475003	UPPER PANEL / MTH-86" & 89" 500MM		AR	AR	AR	
1	474990	UPPER PANEL / MTH-86" & 89" 500MM		AR	AR	AR	
1	475408	UPPER PANEL / MTH-86" & 89" 579.4MM		AR	AR	AR	
1	474654	UPPER PANEL / MTH-86" & 89" 589.5MM		AR	AR	AR	
1	474788	UPPER PANEL / MTH-86" & 89" 603.3MM		AR	AR	AR	
1	475366	UPPER PANEL / MTH-86" & 89" 613MM		AR	AR	AR	
1	474562	UPPER PANEL / MTH-86" & 89" 639.7MM		AR	AR	AR	
1	474572	UPPER PANEL / MTH-86" & 89" 689.8MM		AR	AR	AR	
1	476246	UPPER PANEL / MTH-86" & 89" 703MM		AR	AR	AR	
1	475128	UPPER PANEL / MTH-86" & 89" 741.3MM		AR	AR	AR	
1	474998	UPPER PANEL / MTH-86" & 89" 843MM		AR	AR	AR	
1	476237	UPPER PANEL / MTH-86" & 89" 849MM		AR	AR	AR	
1	475084	UPPER PANEL / MTH-86" & 89" 881MM		AR	AR	AR	
1	474651	UPPER PANEL / MTH-86" & 89" 887.2MM		AR	AR	AR	
1	478331	UPPER PANEL / MTH-86" & 89" 908.1MM		AR	AR	AR	
1	475078	UPPER PANEL / MTH-86" & 89" 914MM		AR	AR	AR	
1	474879	UPPER PANEL / MTH-86" & 89" 938.2MM		AR	AR	AR	
1	476128	UPPER PANEL / MTH-86" & 89" 982MM		AR	AR	AR	
1	476488	UPPER PANEL / MTH-86" & 89" 1103MM		AR	AR	AR	

From Y-7046 To 8-9339		Date:07/2024	PAGE:Y2-1854-50

SIDE PANELS - MTH

Item#	Part	Description	XLII 45	XLII MTH40	XLII MTH45	XLII MTH45E	NOTES
1	475283	UPPER PANEL / MTH-86" & 89" 1107MM		AR	AR	AR	
1	474553	UPPER PANEL / MTH-86" & 89" 1109.5MM		AR	AR	AR	
1	474495	UPPER PANEL / MTH-86" & 89" 1127MM		AR	AR	AR	
1	476508	UPPER PANEL / MTH-86" & 89" 1440MM		AR	AR	AR	
1	474656	UPPER PANEL / MTH-86" & 89" 2177.5MM		AR	AR	AR	
1	475098	UPPER PANEL / MTH-86" & 89" 2490.9MM		AR	AR	AR	
1	476099	UPPER PANEL / MTH-86" & 89" 2526.5MM		AR	AR	AR	
1	474772	UPPER PANEL / MTH-86" & 89" 2560MM		AR	AR	AR	
1	474182	UPPER PANEL / MTH-86" & 89" 2582.8MM		AR	AR	AR	
1	475072	UPPER PANEL / MTH-86" & 89" 2836MM		AR	AR	AR	
1	475148	UPPER PANEL / MTH-86" & 89" 2907MM		AR	AR	AR	
1	476127	UPPER PANEL / MTH-86" & 89" 2932MM		AR	AR	AR	
1	475077	UPPER PANEL / MTH-86" & 89" 2956.3MM		AR	AR	AR	
1	475365	UPPER PANEL / MTH-86" & 89" 3165MM		AR	AR	AR	
1	474623	UPPER PANEL / MTH-86" & 89" 3230.5MM		AR	AR	AR	
1	474564	UPPER PANEL / MTH-86" & 89" 3230.5MM		AR	AR	AR	
1	476129	UPPER PANEL / MTH-86" & 89" 3237MM		AR	AR	AR	
1	475407	UPPER PANEL / MTH-86" & 89" 3291MM		AR	AR	AR	
1	475181	UPPER PANEL / MTH-86" & 89" 3414.5MM		AR	AR	AR	
1	474786	UPPER PANEL / MTH-86" & 89" 3607.5MM		AR	AR	AR	
1	478330	UPPER PANEL / MTH-86" & 89" 3302.7MM		AR	AR	AR	
1	475109	UPPER PANEL / MTH-86" & 89" 3344.9MM		AR	AR	AR	
1	475485	UPPER PANEL / MTH-86" & 89" 3364.7MM		AR	AR	AR	
1	690013	UPPER PANEL / MTH-86" 3607.5MM From 2-7819 To 4-8251			AR		
1	476540	UPPER PANEL / MTH-86" & 89" 3655MM		AR	AR	AR	
1	476786	UPPER PANEL / MTH-86" & 89" 3675MM		AR	AR	AR	
1	475010	UPPER PANEL / MTH-86" & 89" 3682MM		AR	AR	AR	
1	475086	UPPER PANEL / MTH-86" & 89" 3731MM		AR	AR	AR	
1	476495	UPPER PANEL / MTH-86" & 89" 3838MM		AR	AR	AR	
1	475081	UPPER PANEL / MTH-86" & 89" 3859.1MM		AR	AR	AR	
1	474183	UPPER PANEL / MTH-86" & 89" 3878.2MM		AR	AR	AR	
1	474791	UPPER PANEL / MTH-86" & 89" 3930.5MM		AR	AR	AR	
1	474959	UPPER PANEL / MTH-86" & 89" 3967MM		AR	AR	AR	
1	474496	UPPER PANEL / MTH-86" & 89" 4038.5MM		AR	AR	AR	
1	474554	UPPER PANEL / MTH-86" & 89" 4056MM		AR	AR	AR	
1	475392	UPPER PANEL / MTH-86" & 89" 4059MM		AR	AR	AR	
1	476487	UPPER PANEL / MTH-86" & 89" 4062MM		AR	AR	AR	
1	474790	UPPER PANEL / MTH-86" & 89" 4105.6MM		AR	AR	AR	
1	475790	UPPER PANEL / MTH-86" & 89" 4105.6MM		AR	AR	AR	
1	475617	UPPER PANEL / MTH-86" & 89" 4108MM		AR	AR	AR	
1	475071	UPPER PANEL / MTH-86" & 89" 4131.4MM		AR	AR	AR	
1	476268	UPPER PANEL / MTH-86" & 89" 4193MM		AR	AR	AR	

From Y-7046 To 8-9339		Date:07/2024	PAGE:Y2-1854-50

SIDE PANELS - MTH

Item#	Part	Description	XLII 45	XLII MTH40	XLII MTH45	XLII MTH45E	NOTES
1	474878	UPPER PANEL / MTH-86" & 89" 4227.4MM		AR	AR	AR	
1	475079	UPPER PANEL / MTH-86" & 89" 4251.7MM		AR	AR	AR	
1	474652	UPPER PANEL / MTH-86" & 89" 4278.1MM		AR	AR	AR	
1	476236	UPPER PANEL / MTH-86" & 89" 4316.5MM		AR	AR	AR	
1	475000	UPPER PANEL / MTH-86" & 89" 4372MM		AR	AR	AR	
1	475367	UPPER PANEL / MTH-86" & 89" 4461MM		AR	AR	AR	
1	474597	UPPER PANEL / MTH-86" & 89" 4475.8MM		AR	AR	AR	
1	Call order desk	UPPER PANEL / MTH-86" & 89" 4480MM		AR	AR	AR	P
1	476247	UPPER PANEL / MTH-86" & 89" 4512MM		AR	AR	AR	
1	474561	UPPER PANEL / MTH-86" & 89" 4525.9MM		AR	AR	AR	
1	475565	UPPER PANEL / MTH-86" & 89" 4529MM		AR	AR	AR	
1	476435	UPPER PANEL / MTH-86" & 89" 4532MM		AR	AR	AR	
1	476729	UPPER PANEL / MTH-86" & 89" 4656MM		AR	AR	AR	
1	475282	UPPER PANEL / MTH-86" & 89" 4660MM		AR	AR	AR	
1	476570	UPPER PANEL / MTH-86" & 89" 4711MM		AR	AR	AR	
1	475004	UPPER PANEL / MTH-86" & 89" 4715MM		AR	AR	AR	
1	476787	UPPER PANEL / MTH-86" & 89" 4803MM		AR	AR	AR	
1	474661	UPPER PANEL / MTH-86" & 89" 4970.5MM		AR	AR	AR	
1	476507	UPPER PANEL / MTH-86" & 89" 5021MM		AR	AR	AR	
1	476463	UPPER PANEL / MTH-86" & 89" 5022.8MM		AR	AR	AR	
1	476245	UPPER PANEL / MTH-86" & 89" 5064MM		AR	AR	AR	
1	476567	UPPER PANEL / MTH-86" & 89" 5068.1MM		AR	AR	AR	
1	474801	UPPER PANEL / MTH-86" & 89" 5081.3MM		AR	AR	AR	
1	475458	UPPER PANEL / MTH-86" & 89" 5154.5MM		AR	AR	AR	
1	474184	UPPER PANEL / MTH-86" & 89" 5173.6MM		AR	AR	AR	
1	476534	UPPER PANEL / MTH-86" & 89" 5226MM		AR	AR	AR	
1	475388	UPPER PANEL / MTH-86" & 89" 5326MM		AR	AR	AR	
1	474556	UPPER PANEL / MTH-86" & 89" 5351.4MM		AR	AR	AR	
1	476506	UPPER PANEL / MTH-86" & 89" 5404.6MM		AR	AR	AR	
1	475799	UPPER PANEL / MTH-86" & 89" 5438.8MM		AR	AR	AR	
1	476902	UPPER PANEL / MTH-86" & 89" 5590.3MM		AR	AR	AR	
1	475002	UPPER PANEL / MTH-86" & 89" 5631MM		AR	AR	AR	
1	476330	UPPER PANEL / MTH-86" & 89" 5654MM		AR	AR	AR	
1	475127	UPPER PANEL / MTH-86" & 89" 5719.7MM		AR	AR	AR	
1	474573	UPPER PANEL / MTH-86" & 89" 5771.2MM		AR	AR	AR	
1	474814	UPPER PANEL / MTH-86" & 89" 5775.3MM		AR	AR	AR	
1	476557	UPPER PANEL / MTH-86" & 89" 5895.1MM		AR	AR	AR	
1	474977	UPPER PANEL / MTH-86" & 89" 5953MM		AR	AR	AR	
1	474989	UPPER PANEL / MTH-86" & 89" 5961MM		AR	AR	AR	
1	474464	UPPER PANEL / MTH-86" & 89" 5971.7MM		AR	AR	AR	
1	474590	UPPER PANEL / MTH-86" & 89" 6037.2MM		AR	AR	AR	
1	476560	UPPER PANEL / MTH-86" & 89" 6098.3MM		AR	AR	AR	

From Y-7046 To 8-9339		Date:07/2024	PAGE:Y2-1854-50

SIDE PANELS - MTH

Item#	Part	Description	XLII 45	XLII MTH40	XLII MTH45	XLII MTH45E	NOTES
1	475028	UPPER PANEL / MTH-86" & 89" 6151MM		AR	AR	AR	
1	475083	UPPER PANEL / MTH-86" & 89" 6181.7MM		AR	AR	AR	
1	475478	UPPER PANEL / MTH-86" & 89" 6189.6MM		AR	AR	AR	
1	474674	UPPER PANEL / MTH-86" & 89" 6265.8MM		AR	AR	AR	
1	474715	UPPER PANEL / MTH-86" & 89" 6377MM		AR	AR	AR	
1	473592	UPPER PANEL / MTH-86" & 89" 6469MM		AR	AR	AR	
1	474717	UPPER PANEL / MTH-86" & 89" 6469MM		AR	AR	AR	
1	475803	UPPER PANEL / MTH-86" & 89" 6753.2MM		AR	AR	AR	
1	475129	UPPER PANEL / MTH-86" & 89" 6867.5MM		AR	AR	AR	
1	474625	UPPER PANEL / MTH-86" & 89" 7764.4MM		AR	AR	AR	
1	475029	UPPER PANEL / MTH-86" & 89" 7446.4MM		AR	AR	AR	
1	475386	UPPER PANEL / MTH-86" & 89" 8113.7MM		AR	AR	AR	
1	478108	UPPER PANEL / MTH-86" & 89" 9661.4MM		AR	AR	AR	
1	475636	UPPER PANEL / MTH-86" & 89" 10957MM		AR	AR	AR	
1	476682	UPPER PANEL / MTH-86" & 89" 43507.5MM		AR	AR	AR	
1	293716	. EXTRUSION WINDOW UPPER (PANEL) 6705mm		1	1	1	
2	474149	PANEL SUB ASSY / S.B. To 2-7818		8	8	8	
2	475596	PANEL SUB ASSY / S.B. From 2-7819 To 5-8468		8	8	8	
2	476465	PANEL SUB ASSY / B.A. From 5-8469		8	8		
3	474150	PANEL SUB ASSY / S.B. To 2-7818			2	2	
3	475597	PANEL SUB ASSY / S.B. From 2-7819 To 5-8468			2	2	
3	476466	PANEL SUB ASSY / B.A. From 5-8469			2		
4	474151	PANEL SUB ASSY AIR INTAKE RH / S.B. To 2-7818		1	1	1	
4	475598	PANEL SUB ASSY AIR INTAKE RH / S.B. From 2-7819 To 5-8468		1	1	1	
4	476467	PANEL SUB ASSY AIR INTAKE RH / B.A. From 5-8469		1	1		
5	474152	PANEL SUB ASSY AIR INTAKE LH / S.B. To 2-7818		1	1	1	
5	475599	PANEL SUB ASSY AIR INTAKE LH / S.B. From 2-7819 To 5-8468		1		1	
5	475599	PANEL SUB ASSY AIR INTAKE LH / S.B. From 2-7819 To 3-8164			1		
5	476468	PANEL SUB ASSY AIR INTAKE LH / B.A. From 5-8469		1			
6	475654	PANEL SUB ASSY / S.B. From 4-8165 To 5-8468			1		
6	477580	PANEL SUB ASSY / B.A. From 5-8469			1		
6	477581	UPPER PANEL / W/OUT REINFORCEMENT / 840MM X 1789MM / B.A. SERVICE From 5-8469			1		
7	475658	PANEL SUB ASSY AIR INTAKE LH / S.B. From 4-8165 To 5-8468			1		
7	477568	PANEL SUB ASSY AIR INTAKE LH / B.A. From 5-8469			1		
7	477569	PANEL AIR INTAKE LH / B.A. SERVICE From 5-8469			1		
10	474070	FINISHING MOULDING / ANGLE / 1364MM SS / S.B. To 5-8468		2	2	2	
10	477527	FINISHING MOULDING / ANGLE / 1364MM SS / B.A. From 5-8469		2	2		
11	473940	FINISHING MOULDING / ANGLE / 476MM SS / S.B. To 5-8468		2	2	2	
11	477528	FINISHING MOULDING / ANGLE / 476MM SS / B.A. From 5-8469		2	2		
NS	504473	RIVET POP DOME OE 1/8x1/4 SS		12	12		
11	504473	RIVET POP DOME OE 1/8x1/4 SS				18	

From Y-7046 To 8-9339		Date:07/2024	PAGE:Y2-1854-50

SIDE PANELS - MTH

Item#	Part	Description	XLII 45	XLII MTH40	XLII MTH45	XLII MTH45E	NOTES
12	474429	PANEL L.H. UPPER ASSY W/FUEL DOOR LH / S.B. To Y-7439		1		1	
12	474646	PANEL L.H. UPPER ASSY W/FUEL DOOR LH / S.B. From Y-7440 To 5-8468		1		1	
12	477549	PANEL L.H. UPPER ASSY W/FUEL DOOR LH / B.A. From 5-8469		1		1	
12	474428	. PANEL 257MM X 690MM / S.B. To 5-8468		1		1	
12	477539	. PANEL 257MM X 690MM / B.A. From 5-8469		1		1	
13	474430	PANEL R.H. UPPER ASSY W/FUEL DOOR RH / S.B. To Y-7439		1		1	
13	474979	PANEL R.H. UPPER ASSY W/FUEL DOOR RH / S.B. From Y-7440 To 5-8468		1		1	
13	477538	PANEL R.H. UPPER ASSY W/FUEL DOOR RH / B.A. From 5-8469		1		1	
13	474428	. PANEL 257MM X 690MM / S.B. To 5-8468		1		1	
13	477539	. PANEL 257MM X 690MM / B.A. From 5-8469		1		1	
14	473498	PANEL, LOWER 262MM X 257MM / S.B. To 5-8468		1		1	
14	477546	PANEL, LOWER 262MM X 257MM / B.A. From 5-8469		1		1	
15	473130	PANEL, LOWER 200MM X 262MM / S.B. To 5-8468			2		
15	477547	PANEL, LOWER 200MM X 262MM / B.A. From 5-8469			2		
16	474049	PANEL, R.H. 200MM X 676MM / S.B. To 5-8468			1		
16	477543	PANEL, R.H. 200MM X 676MM / B.A. From 5-8469			1		
17	474048	PANEL, L.H. 200MM X 676MM / S.B. To 5-8468			1		
17	477552	PANEL, L.H. 200MM X 676MM / B.A. From 5-8469			1		
18	474722	FINISHING MOULDING / SPACER / 838.5MM / S.B. To 5-8468		2		2	
18	477673	FINISHING MOULDING / SPACER / 838.5MM / B.A. From 5-8469		2		2	
20	473845	MOULDING RETAINER / 1518MM To 3-8044			2	2	
21	473843	MOULDING RETAINER / 2425MM To 3-8044		8	8	8	
22	473847	MOULDING RETAINER / 1130MM To 3-8044		2	2	2	
22	473895	MOULDING RETAINER / 2250MM To 3-8044		1	1	1	
22	475669	MOULDING RETAINER / 312MM From 3-8045		1	1	1	
22	477436	MOULDING RETAINER / 50MM From 3-8045		4	4		
23	504488	RIVET MGLP PRDG 3/16x17/64 SS		AR	AR	AR	
24	474054	FINISHING POST / "U" SHAPE / 2 BAG. DOORS / 39MM X 912MM / S.B. To 5-8468		1	1		
24	477548	FINISHING POST / "U" SHAPE / 2 BAG. DOORS / 39MM X 912MM / B.A. From 5-8469		1	1		
24	474054	FINISHING POST / "U" SHAPE / 2 BAG. DOORS / 39MM X 912MM / S.B. To 5-8468				4	
24	477548	FINISHING POST / "U" SHAPE / 2 BAG. DOORS / 39MM X 912MM / B.A. From 5-8469				4	
25	474062	FINISHING POST / "J" SHAPE L.H. / S.B. To 5-8468			1		
25	477555	FINISHING POST / "J" SHAPE L.H. / B.A. From 5-8469			1		
26	474063	FINISHING POST / "J" SHAPE R.H. / S.B. To 5-8468			1		
26	477556	FINISHING POST / "J" SHAPE R.H. / B.A. From 5-8469			1		
30	473846	MOULDING RETAINER / 1518MM To 3-8044			2	2	
31	473844	MOULDING RETAINER / 2425MM To 3-8044		8	8	8	
NS	473826	MOULDING RETAINER / 1125MM To 3-8044		1	1	1	
32	473709	DRIP MOULDING / 1364MM / S.B. To 5-8468		4			
32	477533	DRIP MOULDING / 1364MM / B.A. From 5-8469		4			
32	473709	DRIP MOULDING / 1364MM / S.B. To 5-8468				6	
32	477533	DRIP MOULDING / 1364MM / B.A. From 5-8469				6	

From Y-7046 To 8-9339		Date:07/2024	PAGE:Y2-1854-50

SIDE PANELS - MTH

Item#	Part	Description	XLII 45	XLII MTH40	XLII MTH45	XLII MTH45E	NOTES
32	473706	DRIP MOULDING / 1535MM / S.B. To 5-8468			6		
32	477530	DRIP MOULDING / 1535MM / B.A. From 5-8469			6		
32	473708	DRIP MOULDING / 1560MM / S.B. To 5-8468			2		
32	477531	DRIP MOULDING / 1560MM / B.A. From 5-8469			2		
32	473707	DRIP MOULDING 1148MM / S.B. To 5-8468		2		2	
32	477534	DRIP MOULDING 1148MM / B.A. From 5-8469		2		2	
32	473705	DRIP MOULDING / 1402MM / S.B. To 5-8468		2		2	
32	477535	DRIP MOULDING / 1402MM / B.A. From 5-8469		2		2	
32	474061	DRIP MOULDING / 1468MM / S.B. To 5-8468		2		2	
32	477536	DRIP MOULDING / 1468MM / B.A. From 5-8469		2		2	
32	474060	DRIP MOULDING / 1765MM / S.B. To 5-8468			2		
32	477532	DRIP MOULDING / 1765MM / B.A. From 5-8469			2		
32	474868	DRIP MOULDING / 1445MM / S.B. To 5-8813		1			A
40	474074	FINISHING MOULDING SS / 5373MM To 3-8044		6			
40	474076	FINISHING MOULDING SS / 6135MM To 3-8044			2	2	
40	474159	FINISHING MOULDING S.S. / 6385MM From 3-8045		2			
40	474159	FINISHING MOULDING S.S. / 6385MM From 3-8045			6		
41	474075	FINISHING MOULDING SS / 4348MM To 3-8044		6			
41	474077	FINISHING MOULDING SS / 5110MM To 3-8044			2	2	
41	474161	FINISHING MOULDING S.S. / 4861MM From 3-8045		6			
41	474161	FINISHING MOULDING S.S. / 4861MM From 3-8045			1		
NS	5060044	TAPE RUB ADH2 CC POL 1/4" X 1/4" X 50' / BLACK I1C-N-A			AR		
60	**Y2-1857-50**	**FENDERS L.H. - MTH**					
61	**Y2-1857-55**	**FENDERS R.H. - MTH**					
62A	504488	RIVET MGLP PRDG 3/16x17/64 SS		AR	AR		
62A	504487	RIVET MGLP PRDG 3/16x7/16 SS		AR	AR		
62B	504339	RIVET POP DOME OE 1/8x3/8 SS		AR	AR		
62C	G1010062-002	RIVET POP CK OE 3/16x1/4 SS		AR	AR		
63	475140	RUBBER SEAL EXTRUSION 13.0x5.5		AR	AR		
NS	506225	TAPE RUB ADH1 CC POL 1/16" x 1/4" x 100' / GREY 2520		AR	AR		
NS	5060044	TAPE RUB ADH2 CC POL 1/4" X 1/4" X 50' / BLACK I1C-N-A		AR	AR		
NS	684517	ADHESIVE SIMSON #ISR 70-03 / GREY / 310ml CARTRIDGE		AR	AR		
NS	682989	ANTISILICONE STANDOX / CLEAR / 4 Liters		AR	AR		
64	477863	MOLDING KIT MTH-40		1			
. NS	477337	. FINISHING MOULDING S.S.		6			
. NS	477338	. FINISHING MOULDING S.S.		1			
. NS	477352	. FINISHING MOULDING S.S.		1			
. NS	477360	. FINISHING MOULDING S.S.		1			
. NS	477361	. MOULDING "Z" SHAPE S.S. 2438MM		10			
64	477864	MOLDING KIT MTH-45 W/O SLIDE-OUT			1		

From Y-7046 To 8-9339		Date:07/2024	PAGE:Y2-1854-50

SIDE PANELS - MTH

Item#	Part	Description	XLII 45	XLII MTH40	XLII MTH45	XLII MTH45E	NOTES
. NS	477337	. FINISHING MOULDING S.S.			8		
. NS	477338	. FINISHING MOULDING S.S.			1		
. NS	477360	. FINISHING MOULDING S.S.			1		
. NS	477361	. MOULDING "Z" SHAPE S.S. 2438MM			11		
64	477865	MOLDING KIT MTH-45 W/ FRONT SLIDE-OUT ONLY			1		
. NS	477337	. FINISHING MOULDING S.S.			6		
. NS	477338	. FINISHING MOULDING S.S.			1		
. NS	477339	. FINISHING MOULDING S.S.			1		
. NS	477340	. FINISHING MOULDING S.S.			1		
. NS	477341	. FINISHING MOULDING S.S.			1		
. NS	477342	. FINISHING MOULDING S.S.			1		
. NS	477343	. FINISHING MOULDING S.S.			1		
. NS	477351	. FINISHING MOULDING S.S.			1		
. NS	477361	. MOULDING "Z" SHAPE S.S. 2438MM			11		
. NS	477358	. FINISHING MOULDING S.S.			2		
64	477866	MOLDING KIT MTH-45 W/ FRONT & REAR SLIDE-OUT CH To 6-8805			1		
. NS	477337	. FINISHING MOULDING S.S. To 6-8805			5		
. NS	477338	. FINISHING MOULDING S.S. To 6-8805			1		
. NS	477339	. FINISHING MOULDING S.S. To 6-8805			1		
. NS	477340	. FINISHING MOULDING S.S. To 6-8805			1		
. NS	477341	. FINISHING MOULDING S.S. To 6-8805			1		
. NS	477342	. FINISHING MOULDING S.S. To 6-8805			1		
. NS	477343	. FINISHING MOULDING S.S. To 6-8805			1		
. NS	477351	. FINISHING MOULDING S.S. To 6-8805			1		
. NS	477353	. FINISHING MOULDING S.S. To 6-8805			1		
. NS	477354	. FINISHING MOULDING S.S. To 6-8805			1		
. NS	477355	. FINISHING MOULDING S.S. To 6-8805			1		
. NS	477356	. FINISHING MOULDING S.S. To 6-8805			1		
. NS	477357	. FINISHING MOULDING S.S. To 6-8805			1		
. NS	477360	. FINISHING MOULDING S.S. To 6-8805			1		
. NS	477361	. MOULDING "Z" SHAPE S.S. 2438MM To 6-8805			11		
. NS	477362	. FINISHING MOULDING S.S. To 6-8805			1		
. NS	477358	. FINISHING MOULDING S.S. To 6-8805			1		
64	477867	MOLDING KIT MTH-45 W/ FRONT SLIDE OUT & REAR 7.5 SLIDE-OUT PREVOST From 6-8806			1		
. NS	477337	. FINISHING MOULDING S.S. From 6-8806			5		
. NS	477338	. FINISHING MOULDING S.S. From 6-8806			1		
. NS	477339	. FINISHING MOULDING S.S. From 6-8806			1		
. NS	477340	. FINISHING MOULDING S.S. From 6-8806			1		
. NS	477341	. FINISHING MOULDING S.S. From 6-8806			1		
. NS	477342	. FINISHING MOULDING S.S. From 6-8806			1		
. NS	477343	. FINISHING MOULDING S.S. From 6-8806			1		
. NS	477344	. FINISHING MOULDING S.S. From 6-8806			1		

From Y-7046 To 8-9339		Date:07/2024	PAGE:Y2-1854-50

SIDE PANELS - MTH

Item#	Part	Description	XLII 45	XLII MTH40	XLII MTH45	XLII MTH45E	NOTES
. NS	477345	. FINISHING MOULDING S.S. From 6-8806			1		
. NS	477346	. FINISHING MOULDING S.S. From 6-8806			1		
. NS	477347	. FINISHING MOULDING S.S. From 6-8806			1		
. NS	477348	. FINISHING MOULDING S.S. From 6-8806			1		
. NS	477351	. FINISHING MOULDING S.S. From 6-8806			1		
. NS	477361	. MOULDING "Z" SHAPE S.S. 2438MM From 6-8806			11		
. NS	477358	. FINISHING MOULDING S.S. From 6-8806			4		
65	477337	. FINISHING MOULDING S.S.		AR	AR		
66	477338	. FINISHING MOULDING S.S.		1	1		
67	477339	. FINISHING MOULDING S.S.			1		
68	477340	. FINISHING MOULDING S.S.			1		
69	477341	. FINISHING MOULDING S.S.			1		
70	477342	. FINISHING MOULDING S.S.			1		
71	477343	. FINISHING MOULDING S.S.			1		
72	477344	. FINISHING MOULDING S.S.			1		
73	477345	. FINISHING MOULDING S.S.			1		
74	477346	. FINISHING MOULDING S.S.			1		
75	477347	. FINISHING MOULDING S.S.			1		
76	477348	. FINISHING MOULDING S.S.			1		
79	477351	. FINISHING MOULDING S.S.			1		
80	477352	. FINISHING MOULDING S.S.		1	1		
81	477353	. FINISHING MOULDING S.S.			1		
82	477354	. FINISHING MOULDING S.S.			1		
83	477355	. FINISHING MOULDING S.S.			1		
84	477356	. FINISHING MOULDING S.S.			1		
85	477357	. FINISHING MOULDING S.S.			1		
86	477358	. FINISHING MOULDING S.S.			AR		
87	477360	. FINISHING MOULDING S.S.		1	1		
88	477361	. MOULDING "Z" SHAPE S.S. 2438MM		AR	AR		
89	477362	. FINISHING MOULDING S.S.			1		
90	690053	PANEL SUB ASSY / FORWARD FRT/"SLIDE-OUT" / S.B. To 4-8247			1		
90	476120	PANEL SUB ASSY / FORWARD FRT/"SLIDE-OUT" / S.B. From 4-8248 To 5-8468			1		
90	477592	PANEL SUB ASSY / FORWARD FRT/"SLIDE-OUT" / B.A. From 5-8469			1		
90	477593	PANEL / FORWARD FRT/"SLIDE-OUT" / B.A. From 5-8469			1		
91	690054	PANEL SUB ASSY / BACKWARD FRT/"SLIDE-OUT" / 1215MM / S.B. To 4-8247			1		
91	476253	PANEL SUB ASSY / BACKWARD FRT/"SLIDE-OUT" / 1219MM / S.B. From 4-8248 To 5-8468			1		B
91	477823	PANEL SUB ASSY / BACKWARD FRT/"SLIDE-OUT" / 1219MM / B.A. From 5-8469 To 6-8805			1		B
91	477824	PANEL ONLY / LOWER, REAR "SLIDE-OUT" / B.A. / SERVICE From 5-8469 To 6-8805			1		B
91	477594	PANEL SUB ASSY / BACKWARD FRT/"SLIDE-OUT" / 1215MM / B.A. From 6-8806			1		
91	477595	PANEL / BACKWARD FRT/"SLIDE-OUT" / 1215MM / B.A. / SERVICE From 6-8806			1		
92	690024	PANEL SUB ASSY / FORWARD REAR /"SLIDE-OUT" / S.B. To 4-8247			1		
92	476117	PANEL SUB ASSY / FORWARD REAR/"SLIDE-OUT" / S.B. From 4-8248 To 5-8468			1		

From Y-7046 To 8-9339		Date:07/2024	PAGE:Y2-1854-50

SIDE PANELS - MTH

Item#	Part	Description	XLII 45	XLII MTH40	XLII MTH45	XLII MTH45E	NOTES
92	477596	PANEL SUB ASSY / FORWARD REAR/"SLIDE-OUT" / B.A. From 5-8469 To 6-8805			1		
92	477597	PANEL / FORWARD REAR/"SLIDE-OUT" / B.A. / SERVICE From 5-8769 To 6-8805			1		
92	477785	PANEL SUB ASSY / FORWARD REAR/"SLIDE-OUT". / B.A. From 6-8806			1		
92	477786	PANEL / FORWARD REAR/"SLIDE-OUT" / B.A. / SERVICE From 6-8806			1		
93	690025	PANEL SUB ASSY / LOWER, REAR "SLIDE-OUT" / S.B. To 3-8164			1		
93	474828	PANEL ONLY / LOWER, REAR "SLIDE-OUT" / S.B. / SERVICE To 3-8164			1		
93	477824	PANEL ONLY / LOWER, REAR "SLIDE-OUT" / B.A. / SERVICE To 3-8164			1		
NS	475581	REINFORCEMENT 67MM X 1821MM / SERVICE To 3-8164			1		
NS	475582	REINFORCEMENT 67MM X 1934MM / SERVICE To 3-8164			1		
94	690226	FINISHING POST / S.B. To 2-7763			1		S
94	690237	FINISHING POST / S.B. To 2-7763			1		S
94	475330	FINISHING POST / "J" SHAPE L.H. / 29.5 MM WIDE / S.B. From 2-7764 To 5-8468			1		
94	477558	FINISHING POST / "J" SHAPE L.H. / 29.5 MM WIDE / B.A. From 5-8469			1		S
95	690032	PANEL ASSY / UPPER "SLIDE-OUT" 4425.6MM To 4-8247			1		
95	293740	PANEL ASSY / UPPER "SLIDE-OUT" 4425.6MM From 4-8248 To 6-8805			1		
95	293825	PANEL ASSY / UPPER "SLIDE-OUT" 4426MM From 8-8806			1		
96	690026	PANEL ASSY / UPPER "SLIDE-OUT" 2292.4MM To 4-8247			1		
96	293742	PANEL ASSY / UPPER "SLIDE-OUT" 2292.4MM From 4-8248 To 6-8805			1		
96	293826	PANEL ASSY / UPPER "SLIDE-OUT" 2293MM From 8-8806			1		
97	690217	PANEL LOWER / "SLIDE-OUT" & MOULDING FORWA / S.B. To 4-8247			1		
97	474831	PANEL LOWER / "SLIDE-OUT" & MOULDING FORWA / S.B. From 4-8248 To 5-8468			1		
97	477588	PANEL LOWER / "SLIDE-OUT" & MOULDING FORWARD / B.A. From 5-8469			1		
98	690218	PANEL LOWER / "SLIDE-OUT" & MOULDING / BAC / S.B. To 4-8247			1		
98	474832	PANEL LOWER / "SLIDE-OUT" & MOULDING / BAC / S.B. From 4-8248 To 5-8468			1		
98	477589	PANEL LOWER / "SLIDE-OUT" & MOULDING / BACKWARD / B.A. From 5-8469			1		
99	**Y2-1884-50**	**SIDE WINDOW - MTH**					
100	475850	PANEL SUB ASSY / LOWER, REAR "SLIDE-OUT" / S.B. From 4-8165 To 5-8468			1		
100	476469	PANEL SUB ASSY / LOWER, REAR "SLIDE-OUT" / B.A. From 5-8469 To 6-8805			1		
100	477787	PANEL SUB ASSY / LOWER, REAR "SLIDE-OUT" / B.A. From 6-8806			1		
100	477788	PANEL / LOWER, REAR "SLIDE-OUT" / B.A. / SERVICE From 6-8806			1		
101	475851	PANEL SUB ASSY AIR INTAKE LH / S.B. From 4-8165 To 5-8468			1		
NS	475842	PANEL / JUNCTION / BETWEEN ITEM 100 & 101 / S.B. From 4-8165 To 5-8468			1		
101	476470	PANEL SUB ASSY AIR INTAKE LH / B.A. From 5-8469 To 6-8805			1		
101	477781	PANEL SUB ASSY AIR INTAKE LH / B.A. From 6-8806			1		
101	477782	PANEL AIR INTAKE LH / B.A. / SERVICE From 6-8806			1		
NS	477608	PANEL / JUNCTION / ITEM 100 & 101 / B.A. From 5-8469 To 6-8805			1		
102	690227	FINISHING POST / "J" SHAPE L.H. / 25.4MM WIDE / S.B. To 2-7763			1		
102	690238	FINISHING POST / "J" SHAPE L.H. / 34.9MM WIDE / S.B. To 2-7763			1		
102	475363	FINISHING POST / "J" SHAPE L.H. / 36MM WIDE / S.B. From 2-7764 To 5-8468			1		
102	477557	FINISHING POST / "J" SHAPE L.H. / 36MM WIDE / B.A. From 5-8469			1		
NS	685251	CLEANER "DESCO" D-537 (4Liters) ALUMINUM & SS		AR	AR	AR	

From Y-7046 To 8-9339		Date:07/2024	PAGE:Y2-1854-50

SIDE PANELS - MTH

Item#	Part	Description	XLII 45	XLII MTH40	XLII MTH45	XLII MTH45E	NOTES
		A) WITH 38" BAGGAGE DOOR					
		B) NEED REWORK FOR ADJUSTMENT					
		S) USE ONLY WITH SMALL A/C SYSTEM					
		P) CALL ORDER DESK FOR SPECIFIC APPLICATION (V.I.N.)					

From 1-7436 To 8-9339		Date:07/2024	PAGE:Y2-1854-51
SIDE FLAT PANEL - MTH ENTERTAINER			

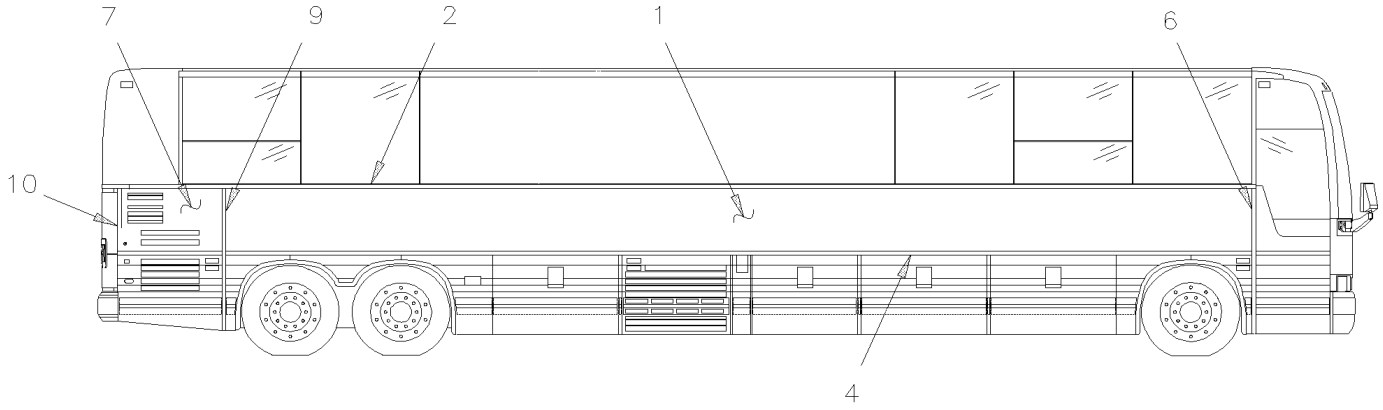

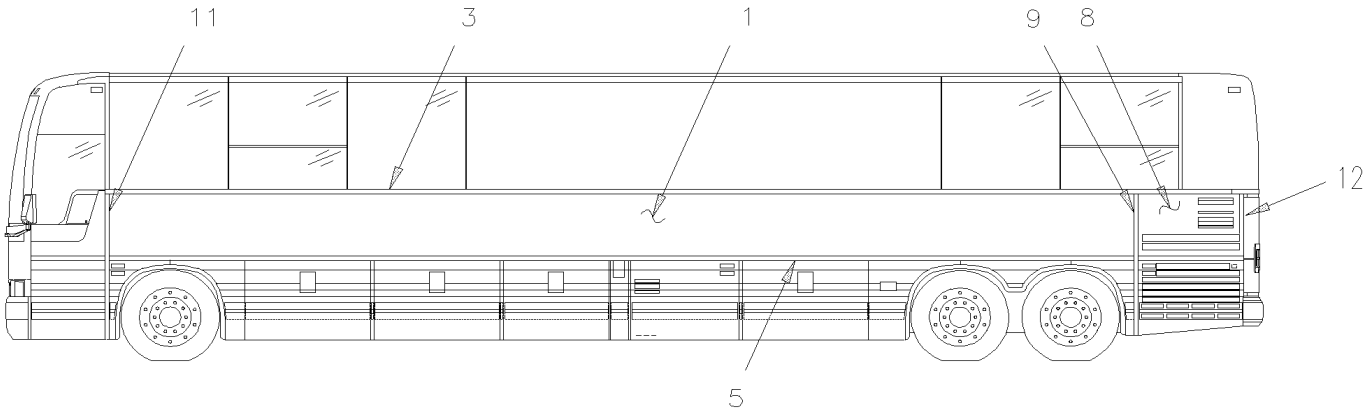

MTH 45' ENT.

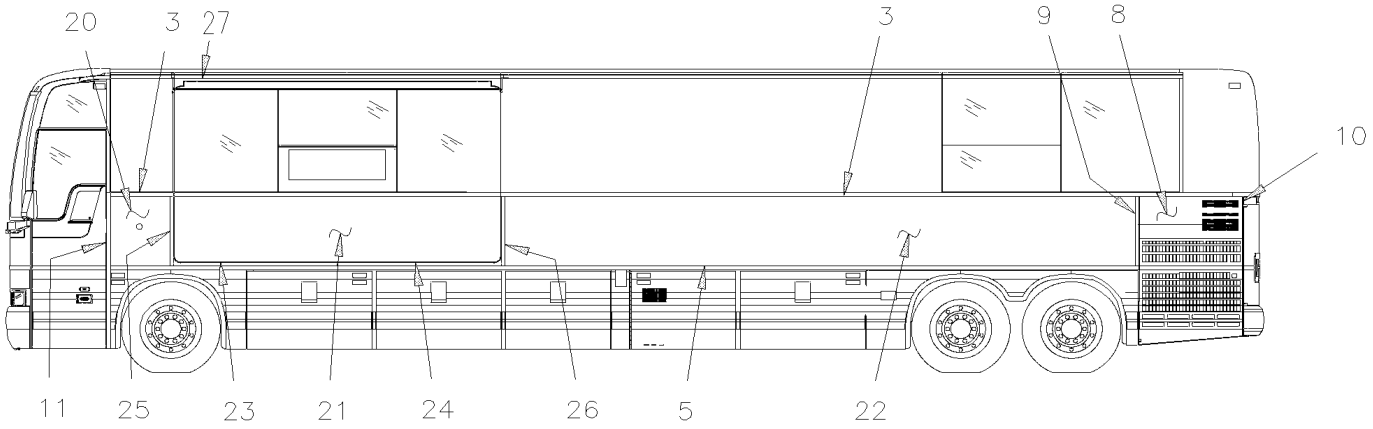

FROM 6-8806

From 1-7436 To 8-9339		Date:07/2024	PAGE:Y2-1854-51

SIDE FLAT PANEL - MTH ENTERTAINER

Item#	Part	Description	XLII 45	XLII MTH40	XLII MTH45	XLII MTH45E	NOTES
1	970287	STAINLESS STEEL SHEET 835MM X 11392MM To 1-7632				2	
1	970286	STAINLESS STEEL SHEET 912MM X 11392MM				2	
2	474514	FINISHING MOULDING UPPER R.H. 12253MM				1	
. NS	506785	. TAPE RUB ADH2 CC POL 1/16" X 1/4" X 200' / BLACK I1C-N-A				AR	
. NS	506790	. TAPE RUB ADH2 CC POL 1/16" x 1/2" x 200' / BLACK I1C-N-A				AR	
3	474515	FINISHING MOULDING UPPER L.H. 12253MM				1	
. NS	506785	. TAPE RUB ADH2 CC POL 1/16" X 1/4" X 200' / BLACK I1C-N-A				AR	
. NS	506790	. TAPE RUB ADH2 CC POL 1/16" x 1/2" x 200' / BLACK I1C-N-A				AR	
4	474512	FINISHING MOULDING LOWER R.H. 9846MM				1	
. NS	506785	. TAPE RUB ADH2 CC POL 1/16" X 1/4" X 200' / BLACK I1C-N-A				AR	
. NS	506769	. TAPE RUB ADH2 CC POL 1/8" x 1/4" x 60' / BLACK H1CC-N-#14				AR	
5	474513	FINISHING MOULDING LOWER L.H. 9846MM				1	
. NS	506785	. TAPE RUB ADH2 CC POL 1/16" X 1/4" X 200' / BLACK I1C-N-A				AR	
. NS	506769	. TAPE RUB ADH2 CC POL 1/8" x 1/4" x 60' / BLACK H1CC-N-#14				AR	
6	475149	FINISHING MOULDING / ANGLE / 1777MM SS / W/86" To 1-7632				1	
6	475103	FINISHING MOULDING / ANGLE / 1853MM SS / W/89" / S.B. To 5-8468				1	
6	477524	FINISHING MOULDING / ANGLE / 1853MM SS / W/89" / B.A. From 5-8469				1	
NS	504473	RIVET POP DOME OE 1/8x1/4 SS				12	
7	474995	PANEL SUB ASSY AIR INTAKE R.H. / MTH 86" To 1-7632				1	
7	474929	PANEL AIR INTAKE R.H. / MTH 86" SERVICE To 1-7632				1	
7	475104	PANEL SUB ASSY AIR INTAKE R.H. / MTH 89" O.E.M.				1	
7	475600	PANEL SUB ASSY AIR INTAKE R.H. / MTH 89" SERVICE				1	
7	475108	PANEL AIR INTAKE R.H. / MTH 89" SERVICE				1	
8	474994	PANEL SUB ASSY AIR INTAKE L.H. / MTH 86" To 1-7632				1	
8	474928	PANEL AIR INTAKE L.H. / MTH 86" SERVICE To 1-7632				1	
8	475105	PANEL SUB ASSY AIR INTAKE L.H. / MTH 89" O.E.M.				1	
8	475601	PANEL SUB ASSY AIR INTAKE L.H. / MTH 89" SERVICE				1	
8	475107	PANEL AIR INTAKE L.H. / MTH 89" service				1	
9	475006	FINISHING MOULDING ALUMINUM 789MM / W86" To 5-8452				2	
9	475101	FINISHING MOULDING ALUMINUM 865MM / W89"				2	
10	473940	FINISHING MOULDING / ANGLE / 476MM SS / S.B. To 1-7632				2	
10	477528	FINISHING MOULDING / ANGLE / 476MM SS / B.A. From 5-8469				2	
10	475137	FINISHING MOULDING / ANGLE / 552MM SS / W/89" / S.B. To 5-8468				2	
10	477525	FINISHING MOULDING / ANGLE / 552MM SS / W/89" / B.A. From 5-8469				2	
11	475150	FINISHING MOULDING / ANGLE / 1777MM SS / W/86" To 1-7632				1	
11	475102	FINISHING MOULDING / ANGLE / 1853MM SS / W/89" / S.B. To 5-8468				1	
11	477526	FINISHING MOULDING / ANGLE / 1853MM SS / W/89" / B.A. From 5-8469				1	
NS	506790	TAPE RUB ADH2 CC POL 1/16" x 1/2" x 200' / BLACK I1C-N-A				AR	
NS	506769	TAPE RUB ADH2 CC POL 1/8" x 1/4" x 60' / BLACK H1CC-N-#14				AR	
NS	506785	TAPE RUB ADH2 CC POL 1/16" X 1/4" X 200' / BLACK I1C-N-A				AR	
NS	506759	TAPE RUB ADH2 CC POL 1/8" x 1/2" x 100' / BLACK I1C-N-A				AR	
NS	506648	TAPE RUB ADH1 CC POL 1/8" x 1/2"x 50' / GREY 2542				AR	

From 1-7436 To 8-9339		Date:07/2024	PAGE:Y2-1854-51

SIDE FLAT PANEL - MTH ENTERTAINER

Item#	Part	Description	XLII 45	XLII MTH40	XLII MTH45	XLII MTH45E	NOTES
NS	683097	CLEANER SIKA #205 / CLEAR / 1000ml				AR	
NS	683916	PRIMER SIKA #215 / CLEAR / 1000ml				AR	
NS	683083	ADHESIVE SIKA #252 / BLACK / 600 ml SAUSAGE				AR	
20	477938	PANEL FLAT FORWARD SLIDE OUT From 6-8806				1	
21	477936	PANEL FLAT FRONT SLIDE OUT From 6-8806				1	
22	970310	STAINLESS STEEL SHEET 912MM X 7086MM From 6-8806				1	
23	477836	PANEL FLAT FORWARD UNDER SLIDE OUT From 6-8806				1	
24	477921	PANEL FLAT BACKWARD UNDER SLIDE OUT From 6-8806				1	
25	477939	MOULDING FORWARD SLIDE OUT From 6-8806				1	
26	477940	MOULDING BACKWARD SLIDE OUT From 6-8806				1	
27	293834	PANEL ASSY / UPPER "SLIDE-OUT" 3553.2MM From 6-8806				1	

		Date:07/2024	PAGE:Y2-1854-90
SIDE PANELS - "SLIDE-OUT"			

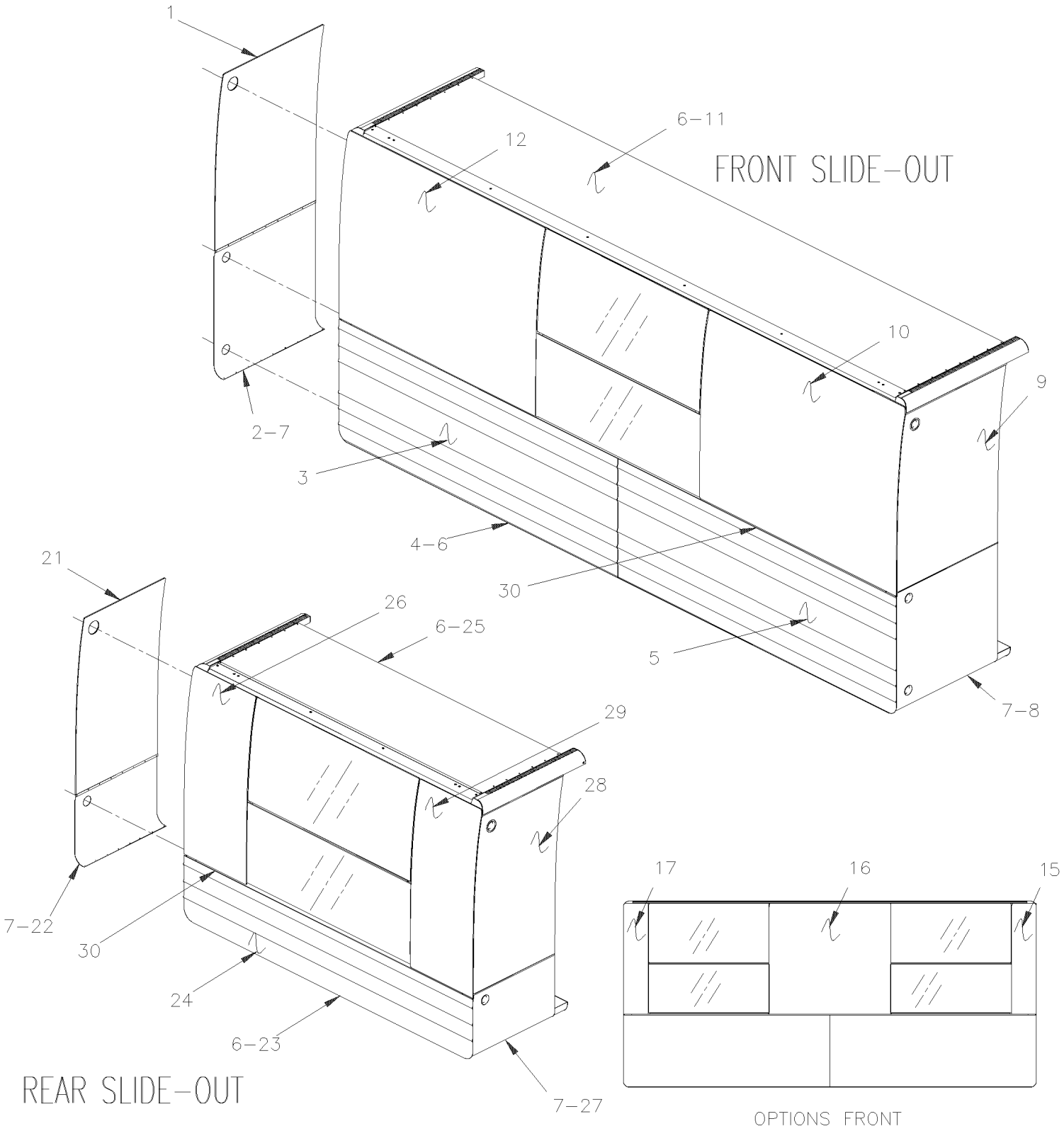

		Date:07/2024	PAGE:Y2-1854-90

SIDE PANELS - "SLIDE-OUT"

Item#	Part	Description	XLII 45	XLII MTH40	XLII MTH45	XLII MTH45E	NOTES
1	690158	FRONT SIDE FIBERGLASS			1		
2	690149	FRONT PANEL S.S. / S.B. To 4-8251			1		
2	477423	FRONT PANEL S.S. / S.B. From 4-8252 To 5-8468			1		
2	477670	FRONT PANEL S.S. / B.A. From 5-8469			1		
2	690207	FRONT PANEL AL.			1		
3	690192	PANEL SUB ASSY / FORWARD FRT/"SLIDE-OUT" / S.B. To 4-8247			1		
3	476136	PANEL SUB ASSY / FORWARD FRT/"SLIDE-OUT" / S.B. From 4-8248 To 5-8468			1		
3	477598	PANEL SUB ASSY / FORWARD FRT/"SLIDE-OUT" / B.A. From 5-8469			1		
3	477599	PANEL / FORWARD FRT/"SLIDE-OUT" / B.A. / SERVICE From 5-8469			1		
4	690186	UNDER FLOOR PANEL AL. To 4-8251			1		
4	477420	UNDER FLOOR PANEL AL. From 4-8252			1		
5	690194	PANEL SUB ASSY / BACKWARD FRT/"SLIDE-OUT" / S.B. To 4-8247			1		
5	476137	PANEL SUB ASSY / BACKWARD FRT/"SLIDE-OUT" / S.B. From 4-8248 To 5-8468			1		
5	477600	PANEL SUB ASSY / BACKWARD FRT/"SLIDE-OUT" / B.A. From 5-8469			1		
5	477601	PANEL / BACKWARD FRT/"SLIDE-OUT" / B.A. / SERVICE From 5-8469			1		
6	690268	RIVET POP CK CLE 1/8x1/4 AL To 4-8251			AR		
6	502876	RIVET POP CK CLE 1/8x3/16 AL From 4-8252			AR		
7	690273	RVT CLE CK 120° S. STEEL 1/8" X 0.313" LG. To 4-8251			AR		
7	502872	RIVET POP CK OE 1/8x3/16 SS From 4-8252			AR		
7	690268	RIVET POP CK CLE 1/8x1/4 AL To 4-8251			AR		
7	502876	RIVET POP CK CLE 1/8x3/16 AL From 4-8252			AR		
8	690150	REAR PANEL S.S. / S.B. To 4-8251			1		
8	477421	REAR PANEL S.S. / S.B. From 4-8252 To 5-8468			1		
8	477669	REAR PANEL S.S. / B.A. From 5-8469			1		
8	690208	REAR PANEL AL.			1		
9	690159	REAR SIDE FIBERGLASS			1		
10	690205	REAR LARGE FIBERGLASS			1		
11	690185	ROOF PANEL AL. To 4-8251			1		
11	477404	ROOF PANEL AL. From 4-8252 To 5-8513			1		
11	478109	ROOF PANEL AL. From 5-8514			1		
12	690206	FRONT LARGE FIBERGLASS			1		
15	690252	CORNER, REAR FIBERGLASS To 4-8247			1		
15	476511	CORNER, REAR FIBERGLASS From 4-8248			1		
16	690143	STANDARD FIBERGLASS			1		
17	690251	CORNER, FRONT FIBERGLASS To 4-8247			1		
17	476510	CORNER, FRONT FIBERGLASS From 4-8248			1		
21	690156	FRONT SIDE FIBERGLASS			1		
22	690153	REAR PANEL S.S. / S.B. To 4-8251			1		
22	477428	REAR PANEL S.S. / B.A. From 4-8252 To 5-8468			1		
22	477672	REAR PANEL S.S. / B.A. From 5-8469			1		
22	690210	REAR PANEL AL.			1		
23	690146	UNDER FLOOR PANEL AL. To 4-8251			1		

		Date:07/2024	PAGE:Y2-1854-90

SIDE PANELS - "SLIDE-OUT"

Item#	Part	Description	XLII 45	XLII MTH40	XLII MTH45	XLII MTH45E	NOTES
23	477425	UNDER FLOOR PANEL AL. From 4-8252 To 5-8513			1		
23	477895	UNDER FLOOR PANEL AL. From 5-8514			1		
24	690188	PANEL SUB ASSY / REAR / "SLIDE-OUT" / S.B. To 4-8247			1		
24	476131	PANEL SUB ASSY / REAR / "SLIDE-OUT" / S.B. From 4-8248 To 5-8468			1		
24	477602	PANEL SUB ASSY / REAR / "SLIDE-OUT" / B.A. From 5-8469			1		
24	477603	PANEL / REAR / "SLIDE-OUT" / B.A. / SERVICE From 5-8469			1		
25	690145	ROOF PANEL AL. To 4-8251			1		
25	477424	ROOF PANEL AL. From 4-8252 To 5-8513			1		
25	477896	ROOF PANEL AL. From 5-8514			1		
26	690147	FRONT FIBERGLASS			1		
27	690152	FRONT PANEL S.S. / S.B. To 4-8251			1		
27	477426	FRONT PANEL S.S. / B.A. From 4-8252 To 5-8468			1		
27	477671	REAR PANEL S.S. / B.A. From 5-8469			1		
27	690209	FRONT PANEL AL.			1		
28	690157	REAR SIDE FIBERGLASS			1		
29	690148	REAR FIBERGLASS			1		
30	293281	RUBBER SEAL EXTRUSION / ADHESIVE / LOWER WINDOW			AR		

		Date:07/2024	PAGE:Y2-1854-91
SIDE PANELS - "SLIDE-OUT"			

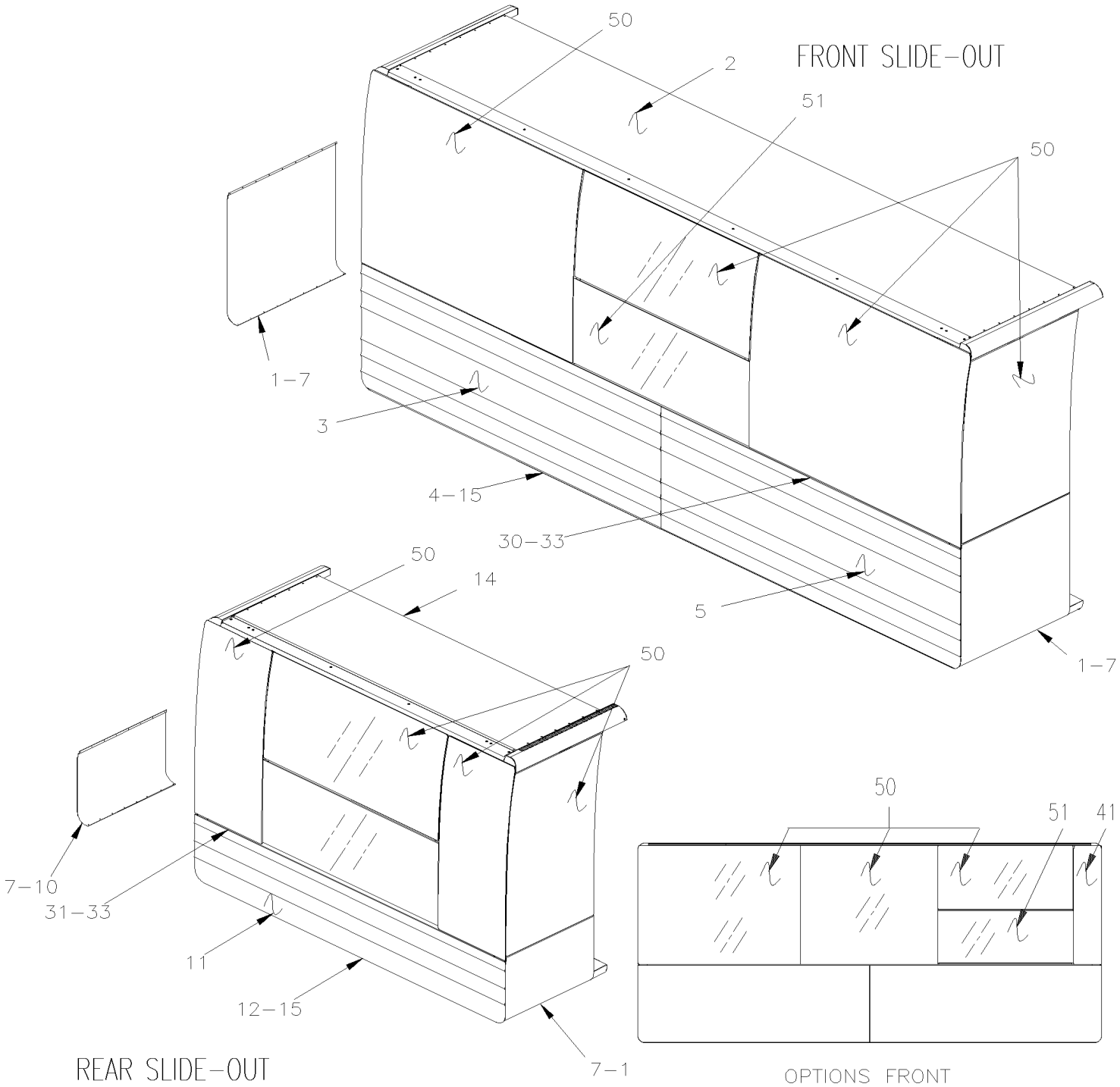

		Date:07/2024	PAGE:Y2-1854-91
SIDE PANELS - "SLIDE-OUT"			

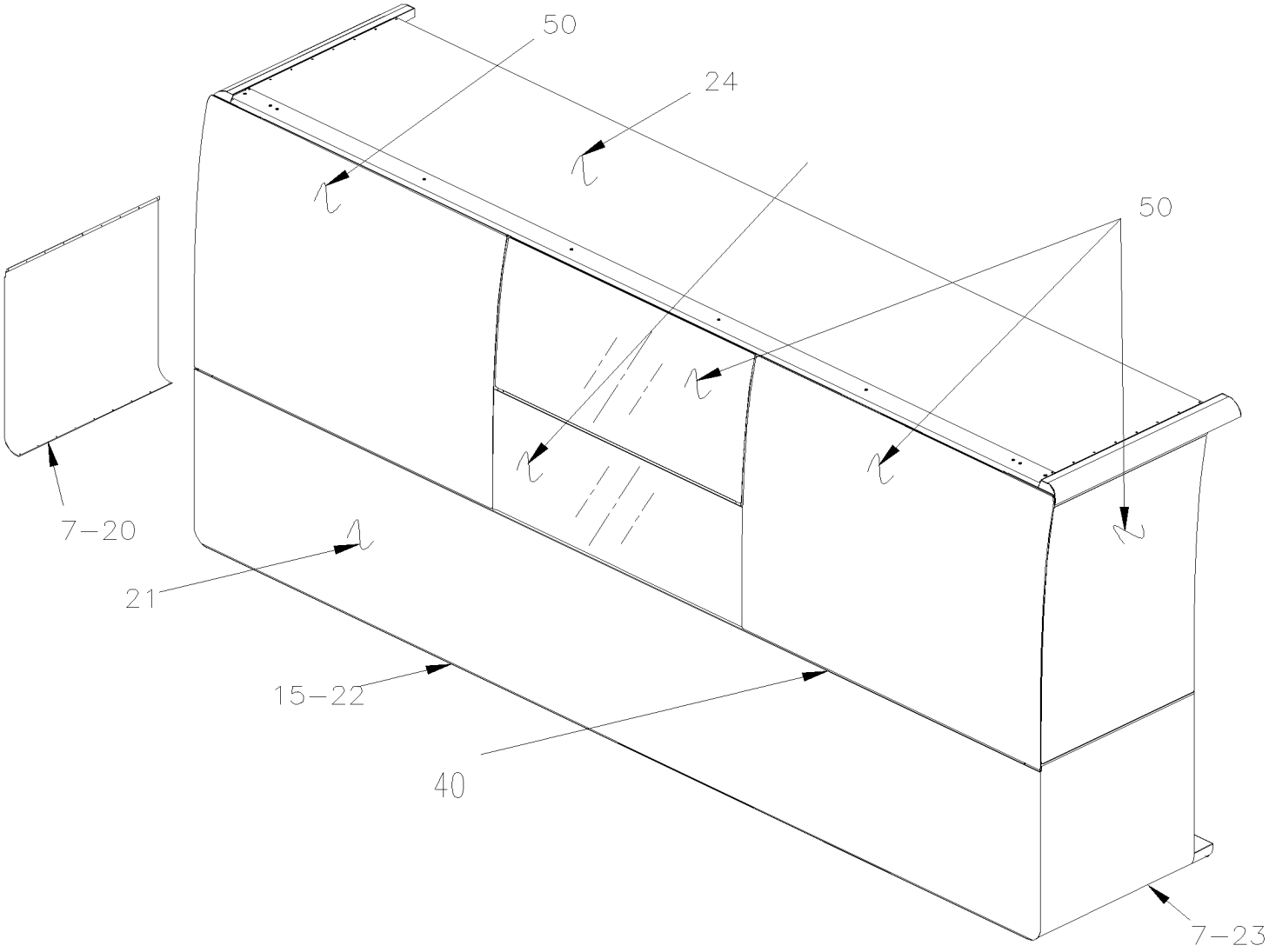

FRONT SLIDE-OUT

MTH 45' ENT.

		Date:07/2024	PAGE:Y2-1854-91

SIDE PANELS - "SLIDE-OUT"

Item#	Part	Description	XLII 45	XLII MTH40	XLII MTH45	XLII MTH45E	NOTES
1	477766	FRONT & REAR PANEL S.S. / B.A. To 6-8945			1		
1	470031	FRONT & REAR PANEL S.S. / B.A. From 6-8946			1		
2	477763	ROOF PANEL AL.			1		
3	477598	PANEL SUB ASSY / FORWARD FRT/"SLIDE-OUT" / B.A.			1		
3	477599	PANEL / FORWARD FRT/"SLIDE-OUT" / B.A. / SERVICE			1		
4	477764	PANEL UNDER			1		
5	477600	PANEL SUB ASSY / BACKWARD FRT/"SLIDE-OUT" / B.A.			1		
5	477601	PANEL / BACKWARD FRT/"SLIDE-OUT" / B.A. / SERVICE			1		
7	502872	RIVET POP CK OE 1/8x3/16 SS			AR	AR	
NS	506785	TAPE RUB ADH2 CC POL 1/16" X 1/4" X 200' / BLACK I1C-N-A			AR	AR	
NS	680532	SEALANT SIKA #221 / GREY / 310ml CARTRIDGE			AR	AR	
10	477773	FRONT & REAR PANEL S.S. / B.A. To 6-8945			1		
10	470034	FRONT & REAR PANEL S.S. / B.A. From 6-8946			1		
11	477783	PANEL SUB ASSY / REAR / "SLIDE-OUT" / B.A.			1		
11	477784	PANEL / REAR / "SLIDE-OUT" / B.A. / SERVICE			1		
12	477772	UNDER FLOOR PANEL AL.			1		
14	477771	ROOF PANEL AL.			1		
15	477902	CAP PLASTIC BLACK / ROD LOOK			1	1	
20	477839	FRONT PANEL S.S. / B.A. To 6-8947				1	
20	470033	FRONT PANEL S.S. / B.A. From 6-8948				1	
21	477936	PANEL FLAT FRONT SLIDE OUT				1	
22	477838	PANEL UNDER				1	
23	477985	REAR PANEL S.S. / B.A. To 6-8947				1	
23	470032	REAR PANEL S.S. / B.A. From 6-8948				1	
24	477837	ROOF PANEL AL.				1	
30	476132	FINISHING MOULDING SS / 4425.6MM			1		
31	476135	FINISHING MOULDING SS / 2292.4MM			1		
32	474515	FINISHING MOULDING UPPER L.H. 12253MM			1		
. NS	506785	. TAPE RUB ADH2 CC POL 1/16" X 1/4" X 200' / BLACK I1C-N-A			AR		
. NS	506790	. TAPE RUB ADH2 CC POL 1/16" x 1/2" x 200' / BLACK I1C-N-A			AR		
33	293281	RUBBER SEAL EXTRUSION / ADHESIVE / LOWER WINDOW			1		
40	474515	FINISHING MOULDING UPPER L.H. 12253MM				1	
. NS	506785	. TAPE RUB ADH2 CC POL 1/16" X 1/4" X 200' / BLACK I1C-N-A				AR	
. NS	506790	. TAPE RUB ADH2 CC POL 1/16" x 1/2" x 200' / BLACK I1C-N-A				AR	
41	476733	PANEL FIBERGLASS 265.7MM			1		
50	**Y2-1884-91**	**SIDE WINDOW - "SLIDE-OUT"**					
51	**Y2-1884-60**	**AWNING WINDOW - MTH**					
51	**Y2-1884-65**	**ELECTRICAL AWNING WINDOW ASSY**					
51	**Y2-1884-80**	**ELECTRICAL SLIDING WINDOW ASSY**					
51	**790458**	**SLIDING WINDOW L.H. - MTH**					
NS	470035	KIT, REMPLACEMENT END PANEL To 6-8947			1	1	
. NS	IS-06028	. SEE INSTRUCTION SHEET To 6-8947			1	1	

		Date:07/2024	PAGE:Y2-1854-91

SIDE PANELS - "SLIDE-OUT"

Item#	Part	Description	XLII 45	XLII MTH40	XLII MTH45	XLII MTH45E	NOTES
53	684217	JIG FOR HOLE RIVET POSITIONING / USED ONLY WITH 470035 KIT To 6-8947			1	1	

From Y-7046 To 8-9339		Date:07/2024	PAGE:Y2-1855-00
RUB RAIL - EXTERIOR CREST & TRIMS			

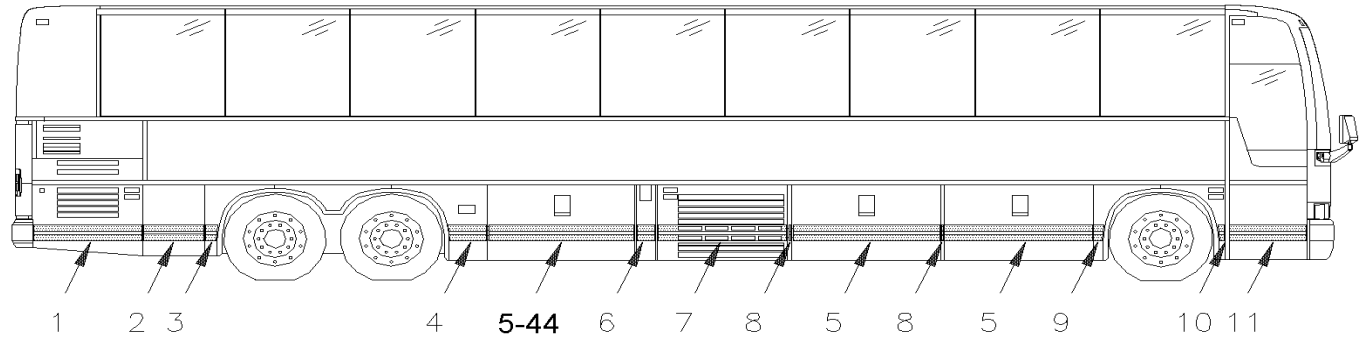

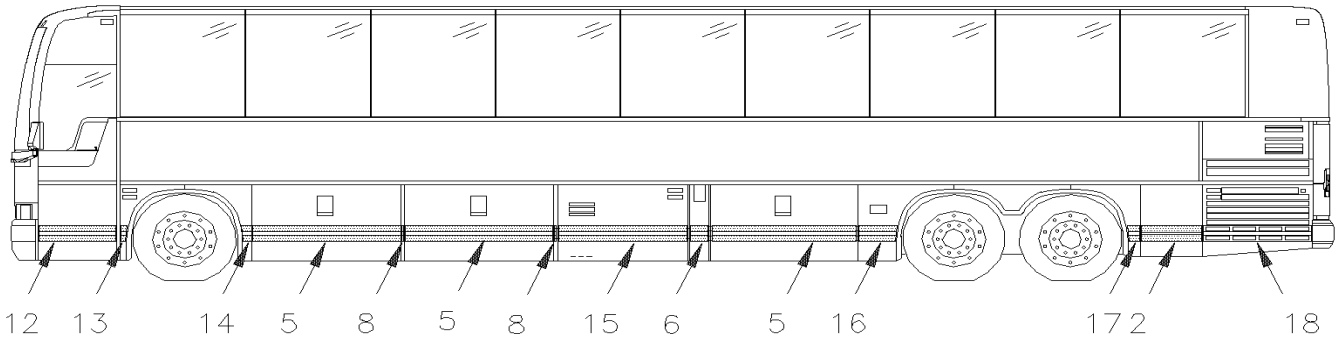

BUS 45'

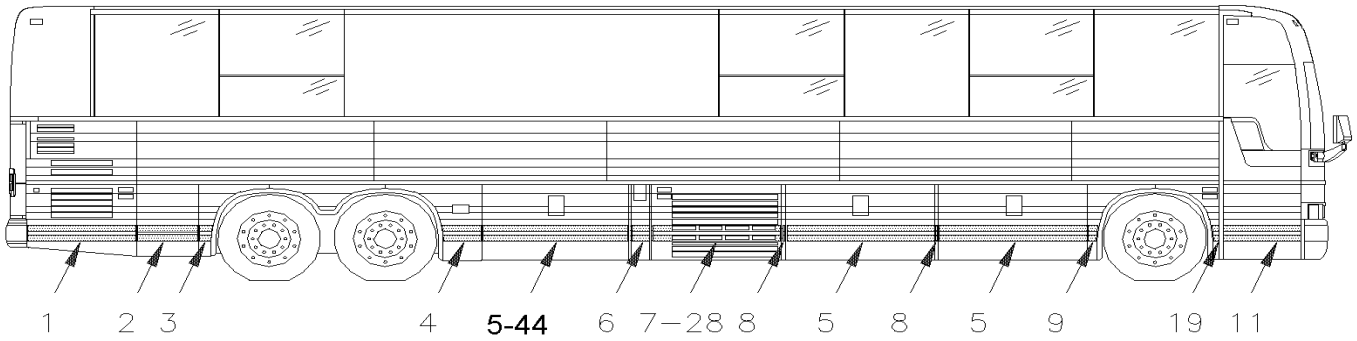

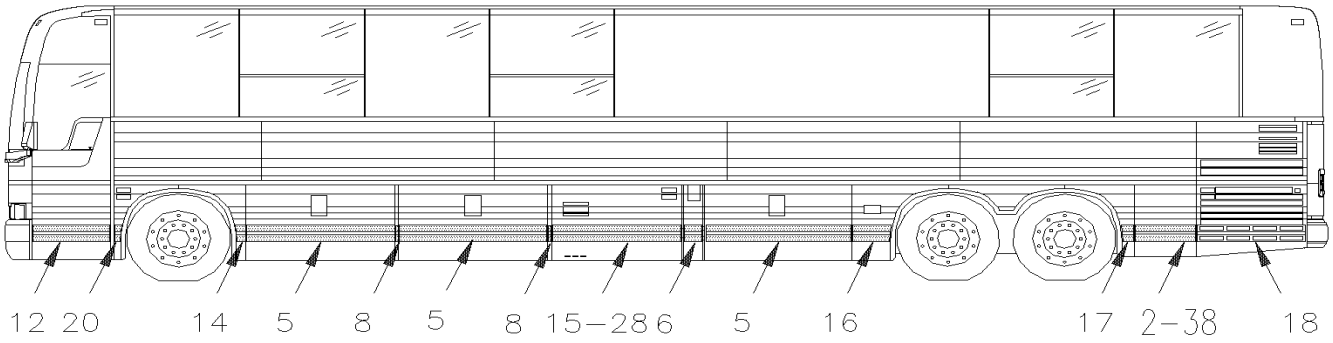

MTH. 45'

From Y-7046 To 8-9339		Date:07/2024	PAGE:Y2-1855-00
RUB RAIL - EXTERIOR CREST & TRIMS			

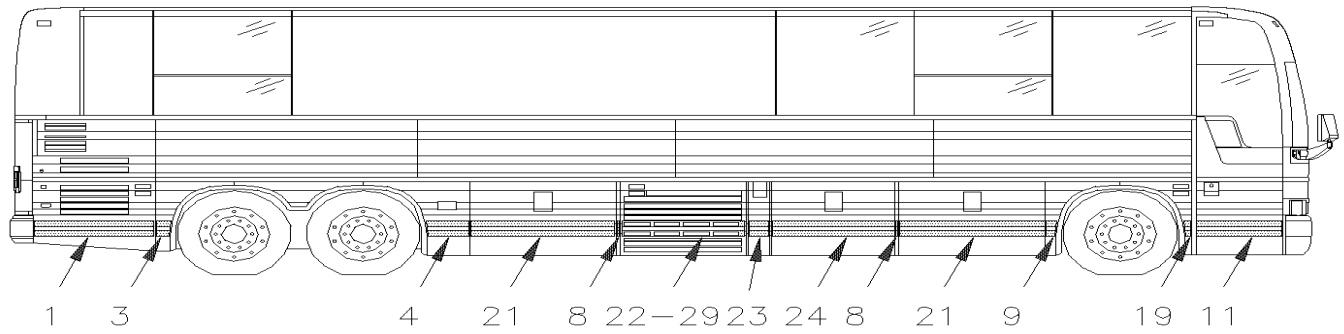

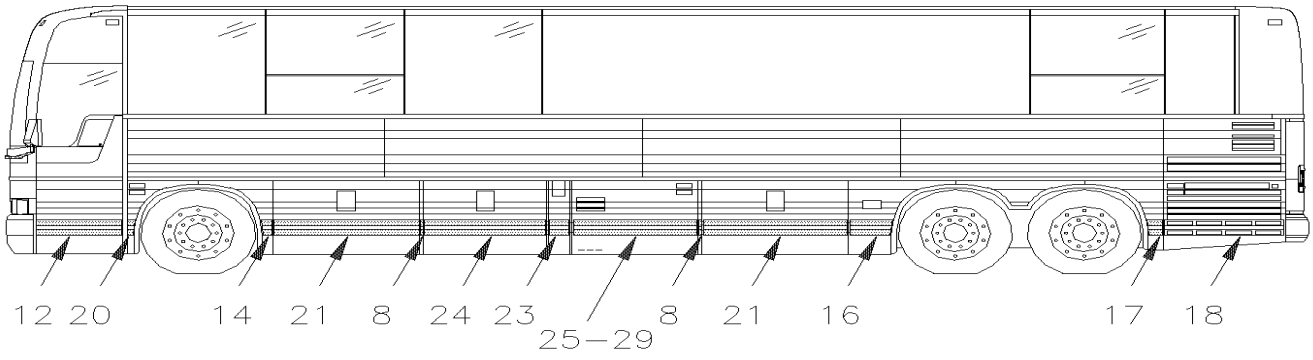

MTH. 40'

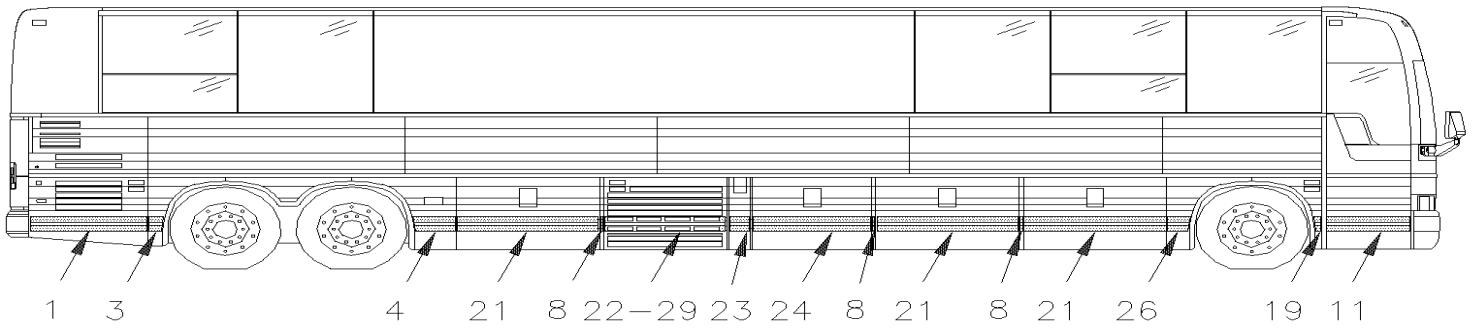

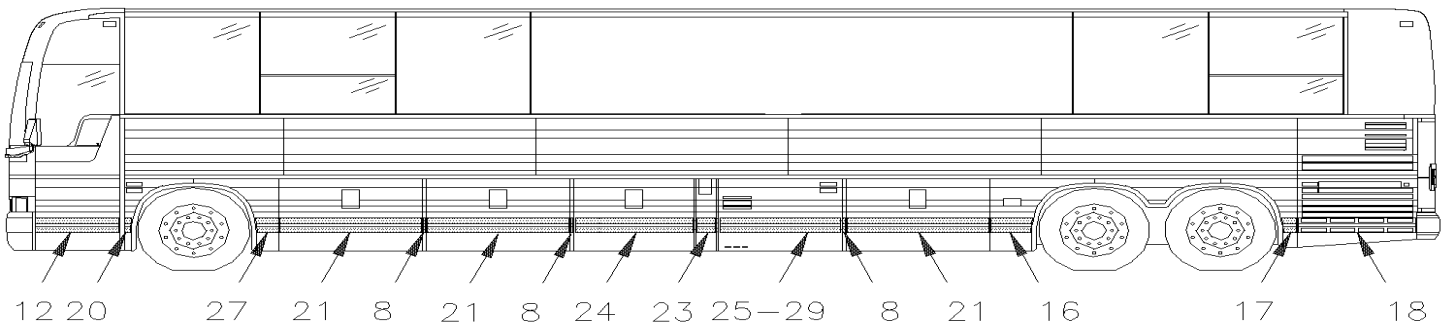

MTH 45' ENT.

From Y-7046 To 8-9339		Date:07/2024	PAGE:Y2-1855-00
RUB RAIL - EXTERIOR CREST & TRIMS			

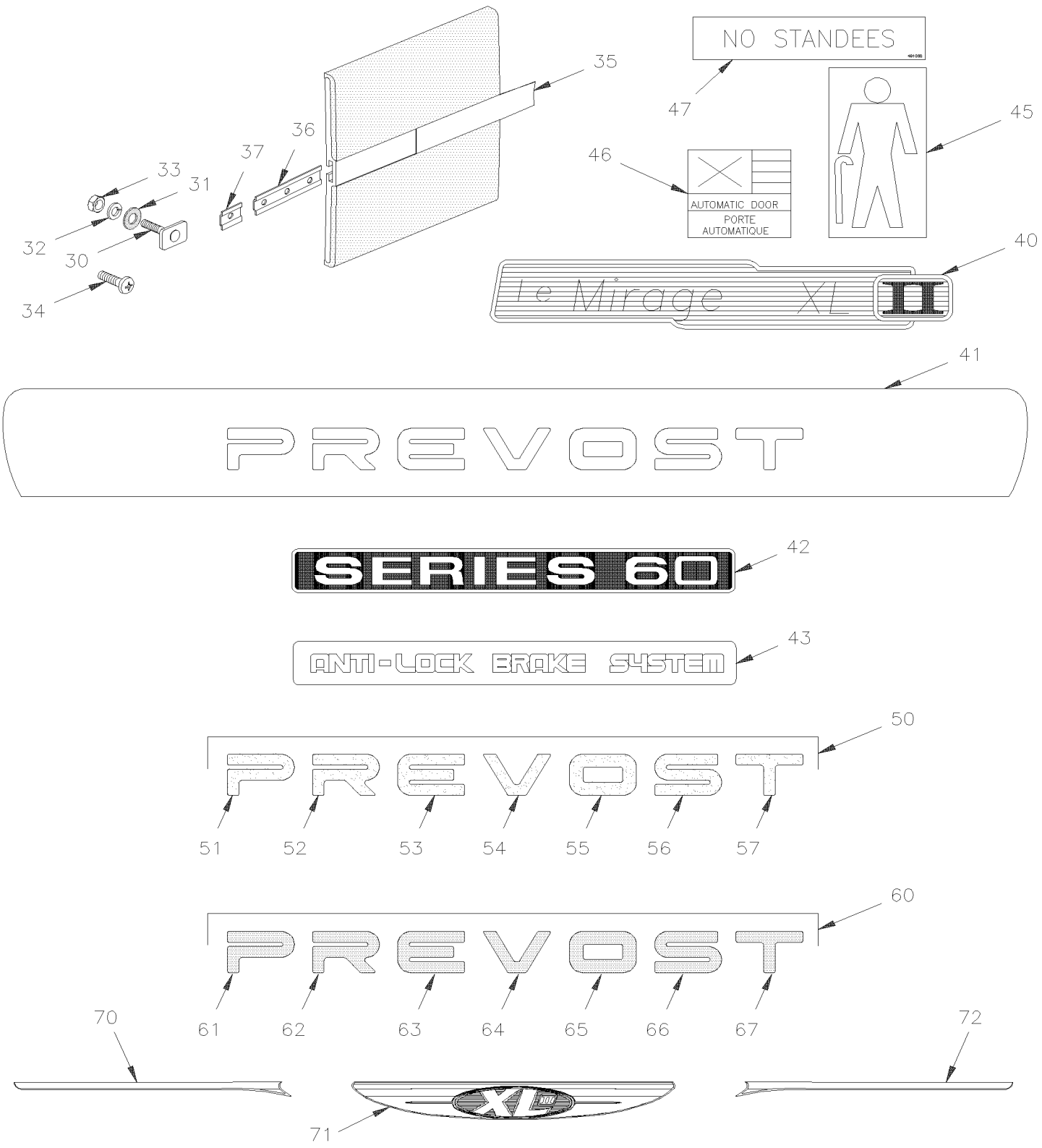

From Y-7046 To 8-9339		Date:07/2024	PAGE:Y2-1855-00

RUB RAIL - EXTERIOR CREST & TRIMS

Item#	Part	Description	XLII 45	XLII MTH40	XLII MTH45	XLII MTH45E	NOTES
1	286639	RUB RAIL ASSY / 1115MM	1	1	1	1	
2	286640	RUB RAIL ASSY / 624MM To 6-8906	2				
2	286640	RUB RAIL ASSY / 624MM To 3-8164			2		
2	286640	RUB RAIL ASSY / 624MM From 4-8165			1		
3	474303	RUB RAIL ASSY / 132MM	1		1		
3	474303	RUB RAIL ASSY / 132MM To 7-9095		1		1	
3	476584	RUB RAIL ASSY / 249MM From 7-9096				1	
4	474302	RUB RAIL ASSY / 399MM	1		1		
4	474302	RUB RAIL ASSY / 399MM To 7-9095		1		1	
4	476583	RUB RAIL ASSY / 294MM From 7-9096				1	
5	474293	RUB RAIL ASSY / 1527MM	6		6		
6	474296	RUB RAIL ASSY / 194MM	2		2		
7	474301	RUB RAIL ASSY / 1349MM	1		1		
8	474294	RUB RAIL ASSY / 33MM	4	4	4		
8	474294	RUB RAIL ASSY / 33MM				6	
9	474300	RUB RAIL ASSY / 108MM	1	1	1		
10	474299	RUB RAIL ASSY / 68MM To 6-8906	1				
11	474290	RUB RAIL ASSY / 794MM / W/1 ½" SCREW	1	1	1	1	
. NS	474304	. SPECIAL SCREW ASSY SQ SS 1/4-20 X 1"½	1	1	1	1	
12	474766	RUB RAIL ASSY / 794MM / W/1" SCREW	1	1	1	1	
13	474291	RUB RAIL ASSY / 66MM	1	1	1	1	
14	474292	RUB RAIL ASSY / 108MM	1	1	1		
15	474295	RUB RAIL ASSY / 1351MM	1		1		
16	474297	RUB RAIL ASSY / 399MM	1		1		
16	474297	RUB RAIL ASSY / 399MM To 7-9095		1		1	
16	476581	RUB RAIL ASSY / 294MM From 7-9096				1	
17	474298	RUB RAIL ASSY / 132MM	1		1		
17	474298	RUB RAIL ASSY / 132MM To 7-9095		1		1	
17	476793	RUB RAIL ASSY / 99MM From 7-9096				1	
18	286639	RUB RAIL ASSY / 1115MM To 6-8906	1				
18	286638	RUB RAIL ASSY / 1115MM PERFORATED			1		
18	286638	RUB RAIL ASSY / 1115MM PERFORATED		1		1	
19	474827	RUB RAIL ASSY / 101MM				1	
20	474826	RUB RAIL ASSY / 101MM				1	
21	474612	RUB RAIL ASSY / 1356MM				6	
21	474612	RUB RAIL ASSY / 1356MM To 5-8813		4			
22	474616	RUB RAIL ASSY / 1134MM		1		1	
23	474797	RUB RAIL ASSY / 251MM		1		1	
24	474613	RUB RAIL ASSY / 1140MM		2		2	
25	474614	RUB RAIL ASSY / 1135MM		1		1	
26	474615	RUB RAIL ASSY / 222MM				1	
27	474611	RUB RAIL ASSY / 222MM				1	

From Y-7046 To 8-9339		Date:07/2024	PAGE:Y2-1855-00

RUB RAIL - EXTERIOR CREST & TRIMS

Item#	Part	Description	XLII 45	XLII MTH40	XLII MTH45	XLII MTH45E	NOTES
28	474612	RUB RAIL ASSY / 1356MM			2		A
29	474613	RUB RAIL ASSY / 1140MM		2		2	
30	474304	SPECIAL SCREW ASSY SQ SS 1/4-20 X 1"½	AR	AR	AR	AR	
31	473378	SEAL WASHER / RUB RAIL & PANEL	AR	AR	AR	AR	
32	500270	WASHER FL .406x1.000x.063 SS	AR	AR	AR	AR	
33	5001123	NUT HEXF 1/4-20 SS	AR	AR	AR	AR	
34	500310	SCREW TC FL PH #10-24x1 1/4 SS410	AR	AR	AR	AR	
35	920010	STRIPE, REFLECTIVE BLACK / 22MM X 150'	AR	AR	AR	AR	
35	287287	. STRIPE, REFLECTIVE BLACK / 22MM X 15'	AR	AR	AR	AR	
36	474777	ATTACHMENT SUPPORT THIN 5.6MM X 100MM 3 HOLES	1	1	1	1	
36	474944	ATTACHMENT SUPPORT THIN 4MM X 100MM 3 HOLES	1	1	1	1	
36	474783	ATTACHMENT SUPPORT THICK 5.6MM X 30MM	AR	AR	AR	AR	
37	474953	ATTACHMENT SUPPORT THIN 4MM X 30MM 1 HOLE	1	1	1	1	
40	490902	CREST "XL-II"	1	1	1	1	
41	490849	CREST "PREVOST" 168MM X 1420MM To 4-8358		1	1	1	C
41	490918	CREST "PREVOST" 107MM X 1327MM To 4-8358	1	1	1	1	C
NS	474658	CREST SUPPORT FIBERGLASS To 4-8358	1	1	1	1	
NS	506790	TAPE RUB ADH2 CC POL 1/16" x 1/2" x 200' / BLACK I1C-N-A To 6-8906	AR				
NS	506769	TAPE RUB ADH2 CC POL 1/8" x 1/4" x 60' / BLACK H1CC-N-#14 To 6-8906	AR				
42	490718	DECAL, "SERIES 60" SS To 6-8906	1				
43	490651	DECAL, "ANTI-LOCK BRAKE SYSTEM" To 6-8906	1				
44	474949	RUB RAIL ASSY / 1513MM To 6-8906	1				W
45	131490	DECAL "FRONT KNEELING" / BLACK ON ALUMINIUM To 6-8906	1				
45	Call order desk	DECAL "FRONT KNEELING" / BLACK ON ALUMINIUM To 6-8906	1				P
46	285813	DECAL / "AUTOMATIC DOOR" / HAND OFF / ALU / ENGLISH & FRANCAIS To 6-8906	1				
46	282473	DECAL / "AUTOMATIC DOOR" / HAND OFF / CLEAR / ENGLISH & FRANCAIS To 6-8906	1				
47	491068	DECAL "NO STANDEES" / W/"NEW-JERSEY" To 6-8906	1				
50	490922	CREST "PREVOST" GOLD REAR		1	1	1	
51	490931	. LETTER "P" GOLD		1	1	1	
52	490932	. LETTER "R" GOLD		1	1	1	
53	490933	. LETTER "E" GOLD		1	1	1	
54	490934	. LETTER "V" GOLD		1	1	1	
55	490935	. LETTER "O" GOLD		1	1	1	
56	490936	. LETTER "S" GOLD		1	1	1	
57	490937	. LETTER "T" GOLD		1	1	1	
60	490921	CREST "PREVOST" SILVER REAR	1	1	1	1	
61	490924	. LETTER "P" SILVER	1	1	1	1	
62	490925	. LETTER "R" SILVER	1	1	1	1	
63	490926	. LETTER "E" SILVER	1	1	1	1	
64	490927	. LETTER "V" SILVER	1	1	1	1	
65	490928	. LETTER "O" SILVER	1	1	1	1	
66	490929	. LETTER "S" SILVER	1	1	1	1	

From Y-7046 To 8-9339		Date:07/2024	PAGE:Y2-1855-00

RUB RAIL - EXTERIOR CREST & TRIMS

Item#	Part	Description	XLII 45	XLII MTH40	XLII MTH45	XLII MTH45E	NOTES
67	490930	. LETTER "T" SILVER	1	1	1	1	
70	491015	CREST "XL-II" & X3-45 / CURBSIDE WING PART From 5-8359	1	1	1	1	
71	491014	CREST "XL-II" / CENTER PART From 5-8359	1	1	1	1	
72	491016	CREST "XL-II" & X3-45 / STREETSIDE WING PART From 5-8359	1	1	1	1	
73	410626	DECAL "MAXIMUM HITCH CAPACITY"	1	1	1	1	
		A) MTH WITH SMALL A/C SYSTEM					
		C) USE ON MTH FROM Y-7336					
		W) WITH W.C.L. BAGGAGE DOOR					
		P) CALL ORDER DESK FOR SPECIFIC APPLICATION (V.I.N.)					

From Y-7046 To 2-7763		Date:07/2024	PAGE:Y2-1856-20
MIRROR "RAMCO" FLAT GLASS / SILVER PAINTED			

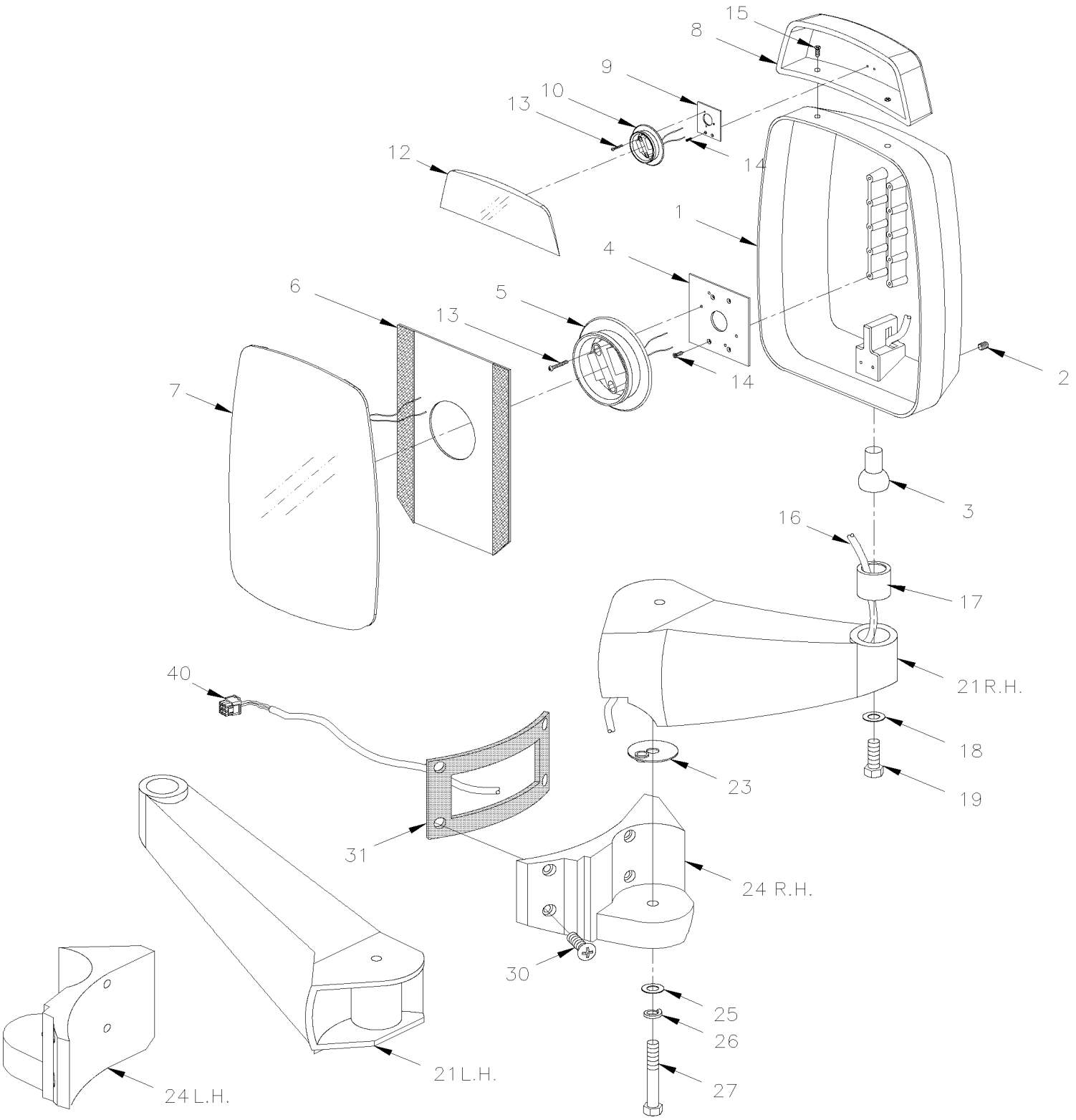

From Y-7046 To 2-7763		Date:07/2024	PAGE:Y2-1856-20

MIRROR "RAMCO" FLAT GLASS / SILVER PAINTED

Item#	Part	Description	XLII 45	XLII MTH40	XLII MTH45	XLII MTH45E	NOTES
	990329	MIRROR ASSY, L.H. / W/CONVEX ELECTRIC / W/8 PINS CONNECTOR	1				
	990330	MIRROR ASSY, R.H. / W/CONVEX ELECTRIC / W/8 PINS CONNECTOR	1				
1	990346	. HEAD ASSY / W/CONVEX ELECTRIC / W/8 PINS CONNECTOR	1				
2	502812	. . SCREW SET HEXS CUP 3/8-16X3/8 SS	1				
3	990186	. . STUD, BALL	1				
4	990272	. . NOTCHED BACK MOUNTING PLATE (2" X 3")	1				
5	990349	. . MOTOR 12V / MEDIUM / BLACK / 108MM / 4 1/4" O.D.	1				
. NS	564494	. . . TAB TERMINAL / 20-16 / AMP 63138-1	4				
6	990268	. . VELCRO PLATE / 8" X 8"	1				
7	990199	. . GLASS ASSY W/HEATER 12V	1				
8	990346	. . HEAD ASSY / W/CONVEX ELECTRIC / W/8 PINS CONNECTOR	1				
9	990295	. . . PLATE, TOP MOTOR MOUNTING	1				
10	990300	. . . MOTOR 12V / SMALL / BLACK / 85MM / 3 5/16" O.D.	1				
. NS	564494	. . . . TAB TERMINAL / 20-16 / AMP 63138-1	4				
12	990339	. . . GLASS CONVEX ASSY W/HEATER 12V	1				
13	N.P.N.	. . SCREW TC PAN PH ZP 6-32 X 1 1/8"	3				4
14	500660	. . SCREW TC FL PH #6-32x3/8 Z050	3				
15	990530	. . SCREW CAP HEX #10-24x1" SS	2				
NS	500787	. . NUT HEX #10-24 SS	2				
16	990377	. . CABLE ASSY / W/CONNECTOR 8PIN	1				
17	990379	. . CUP, BALL STUD RETAINER / ONE PIECE	1				
18	500270	. . WASHER FL .406x1.000x.063 SS	1				
19		. . SCREW CAP HEX SS 3/8-24 X 1.250	1				
21	990313	. ARM, L.H.	1				
21	990315	. ARM, R.H.	1				
23	990265	. WASHER ALUMINUM / 2 " O.D.	1				
23	504082	. . SNAP BUSHING / .125x.312x.312	1				
24	990309	. BRACKET, MOUNTING R.H.	1				
24	990311	. BRACKET, MOUNTING L.H.	1				
25	500958	. WASHER FL .531x1.062x.095 SS	1				
26	500035	. WASHER LO SPT .317x.586x.078 SS	1				
27	990500	. SCREW 1/2-13x2 HHCS SS	1				
30	5001461	SCREW MA FL PH M8-1.25x40 SS	2				
30	5001581	SCREW CAP BUT HEXS M8-1.25x40 SS	2				
NS	5001341	WASHER FL 8.4x17.0x1.6 SS	2				
31	490873	GASKET, RH	2				
31	490894	GASKET, LH	1				
40	562920	CONNECTOR / SH 8C / SWITCHCRAFT EN3C8FC	1				A
NS	562919	CONNECTOR / PH 8C / SWITCHCRAFT EN3P8MC	2				A B
NS	065583	KIT, RETROFIT CONNECTOR "CONXAL" 8C	1				
. NS	IS-01082	. SEE INSTRUCTION SHEET	1				
. NS	065534	. CABLE ASSY , INTERFACE / SWITCHCRAFT & CONXAL	1				

From Y-7046 To 2-7763		Date:07/2024	PAGE:Y2-1856-20

MIRROR "RAMCO" FLAT GLASS / SILVER PAINTED

Item#	Part	Description	XLII 45	XLII MTH40	XLII MTH45	XLII MTH45E	NOTES
NS	**MI16-28**	**DRIP EDGE ADDITION ON FRONT MIRRORS / PRODUCT IMPROVMENT**	1				
		A) FOR PRODUCT IMPROVEMENT ASK KIT 065583					
		B) THIS CONNECTOR IT USED ON CABLE HARNESS FROM INSIDE OF VEHICULE					
		4) NO PARTS NUMBER					

From Y-7046 To 2-7763		Date:07/2024	PAGE:MI16-28
DRIP EDGE ADDITION ON FRONT MIRRORS / PRODUCT IMPROVMENT			

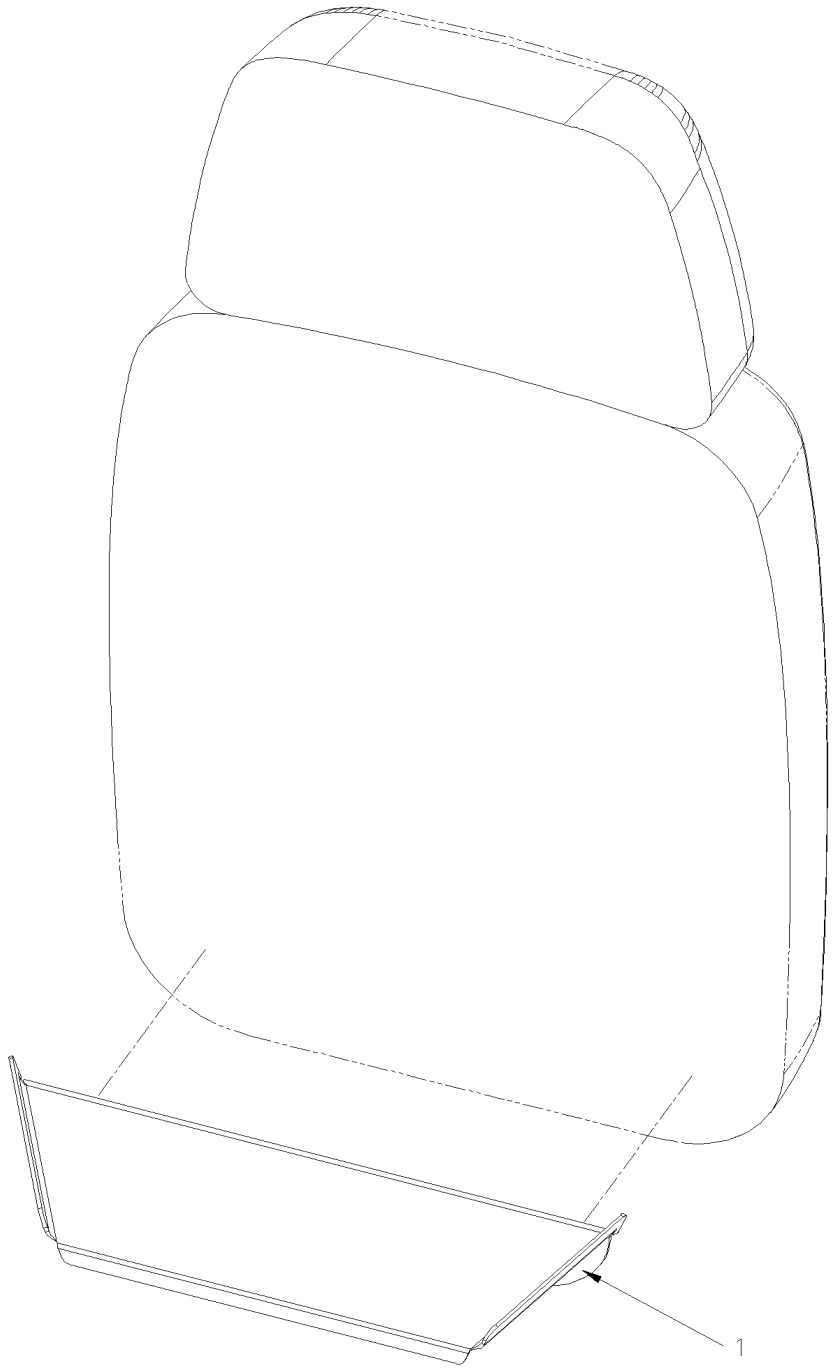

From Y-7046 To 2-7763		Date:07/2024	PAGE:MI16-28

DRIP EDGE ADDITION ON FRONT MIRRORS / PRODUCT IMPROVMENT

Item#	Part	Description	XLII 45	XLII MTH40	XLII MTH45	XLII MTH45E	NOTES
1	491507	MIRROR EXT. DRIP MOLDING ASSY	2	2	2	2	
2		MAINTENANCE INFORMATION	1	1	1	1	

From 2-7764 To 6-8906		Date:07/2024	PAGE:Y2-1856-21
MIRROR "RAMCO" FLAT GLASS / SILVER PAINTED			

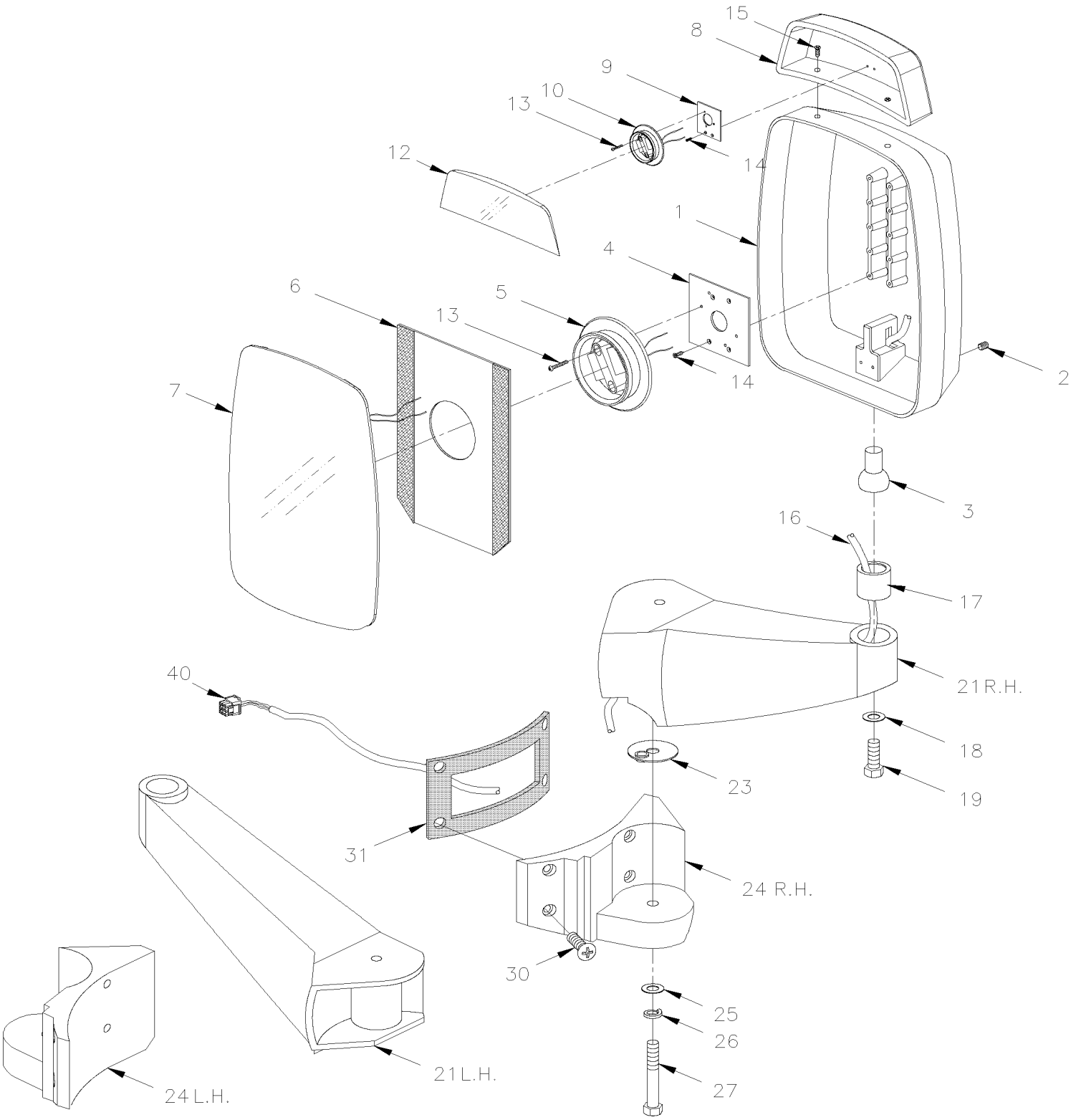

From 2-7764 To 6-8906		Date:07/2024	PAGE:Y2-1856-21

MIRROR "RAMCO" FLAT GLASS / SILVER PAINTED

Item#	Part	Description	XLII 45	XLII MTH40	XLII MTH45	XLII MTH45E	NOTES
	990364	MIRROR ASSY, L.H. / W/CONVEX ELECTRIC / W/8 PINS CONNECTOR To 3-8041	1				
	990408	MIRROR ASSY, L.H. / W/CONVEX ELECTRIC / W/8 PINS CONNECTOR From 3-8042	1				
	990365	MIRROR ASSY, R.H. / W/CONVEX ELECTRIC / W/8 PINS CONNECTOR	1				
1	990375	. HEAD ASSY / W/CONVEX ELECTRIC / W/8 PINS CONNECTOR	1				
2	502812	. . SCREW SET HEXS CUP 3/8-16X3/8 SS	1				
3	990186	. . STUD, BALL	1				
4	990272	. . NOTCHED BACK MOUNTING PLATE (2" X 3")	1				
5	990349	. . MOTOR 12V / MEDIUM / BLACK / 108MM / 4 1/4" O.D.	1				
. NS	564494	. . . TAB TERMINAL / 20-16 / AMP 63138-1	4				
6	990268	. . VELCRO PLATE / 8" X 8"	1				
7	990199	. . GLASS ASSY W/HEATER 12V	1				
8	990346	. . HEAD ASSY / W/CONVEX ELECTRIC / W/8 PINS CONNECTOR	1				
9	990295	. . . PLATE, TOP MOTOR MOUNTING	1				
10	990300	. . . MOTOR 12V / SMALL / BLACK / 85MM / 3 5/16" O.D.	1				
. NS	564494	. . . . TAB TERMINAL / 20-16 / AMP 63138-1	4				
12	990339	. . . GLASS CONVEX ASSY W/HEATER 12V	1				
13	N.P.N.	. . SCREW TC PAN PH ZP 6-32 X 1 1/8"	3				4
14	500660	. . SCREW TC FL PH #6-32x3/8 Z050	3				
15	990530	. . SCREW CAP HEX #10-24x1" SS	2				
NS	500787	. . NUT HEX #10-24 SS	2				
16	N.P.N.	. . CABLE ASSY / W/CONNECTOR 8PIN / SEE ITEM # 40	1				4
17	990379	. . CUP, BALL STUD RETAINER / ONE PIECE	1				
18	500270	. . WASHER FL .406x1.000x.063 SS	1				
19		. . SCREW CAP HEX SS 3/8-24 X 1.250	1				
21	990313	. ARM, L.H. To 3-8041	1				
21	990315	. ARM, R.H.	1				
21	990393	. ARM, L.H. / DIRTY FREE From 3-8042	1				
23	990265	. WASHER ALUMINUM / 2 " O.D.	1				
23	504082	. . SNAP BUSHING / .125x.312x.312	1				
24	990309	. BRACKET, MOUNTING R.H.	1				
24	990311	. BRACKET, MOUNTING L.H.	1				
25	500958	. WASHER FL .531x1.062x.095 SS	1				
26	500035	. WASHER LO SPT .317x.586x.078 SS	1				
27	990500	. SCREW 1/2-13x2 HHCS SS	1				
30	5001461	SCREW MA FL PH M8-1.25x40 SS	2				
30	5001581	SCREW CAP BUT HEXS M8-1.25x40 SS	2				
NS	5001341	WASHER FL 8.4x17.0x1.6 SS	2				
31	490873	GASKET, RH	2				
31	490894	GASKET, LH	1				
40	563163	CONNECTOR / W 45" CABLE ASSY / PH 8C / CONXALL 3280-8PG-324	1				
NS	563088	CONNECTOR / MULTI CON X / SH 8C / CONXALL 4280-8SG-300	2				B
NS	562511	SOCKET TERMINAL / 20 / CONXALL 586SG	AR				B

From 2-7764 To 6-8906		Date:07/2024	PAGE:Y2-1856-21

MIRROR "RAMCO" FLAT GLASS / SILVER PAINTED

Item#	Part	Description	XLII 45	XLII MTH40	XLII MTH45	XLII MTH45E	NOTES
NS	**MI16-28**	**DRIP EDGE ADDITION ON FRONT MIRRORS / PRODUCT IMPROVMENT**	1				
		B) THIS CONNECTOR IT USED ON CABLE HARNESS FROM INSIDE OF VEHICULE					
		4) NO PARTS NUMBER					

From Y-7046 To 2-7763		Date:07/2024	PAGE:Y2-1856-22
MIRROR "RAMCO" FLAT GLASS / BLACK PAINTED			

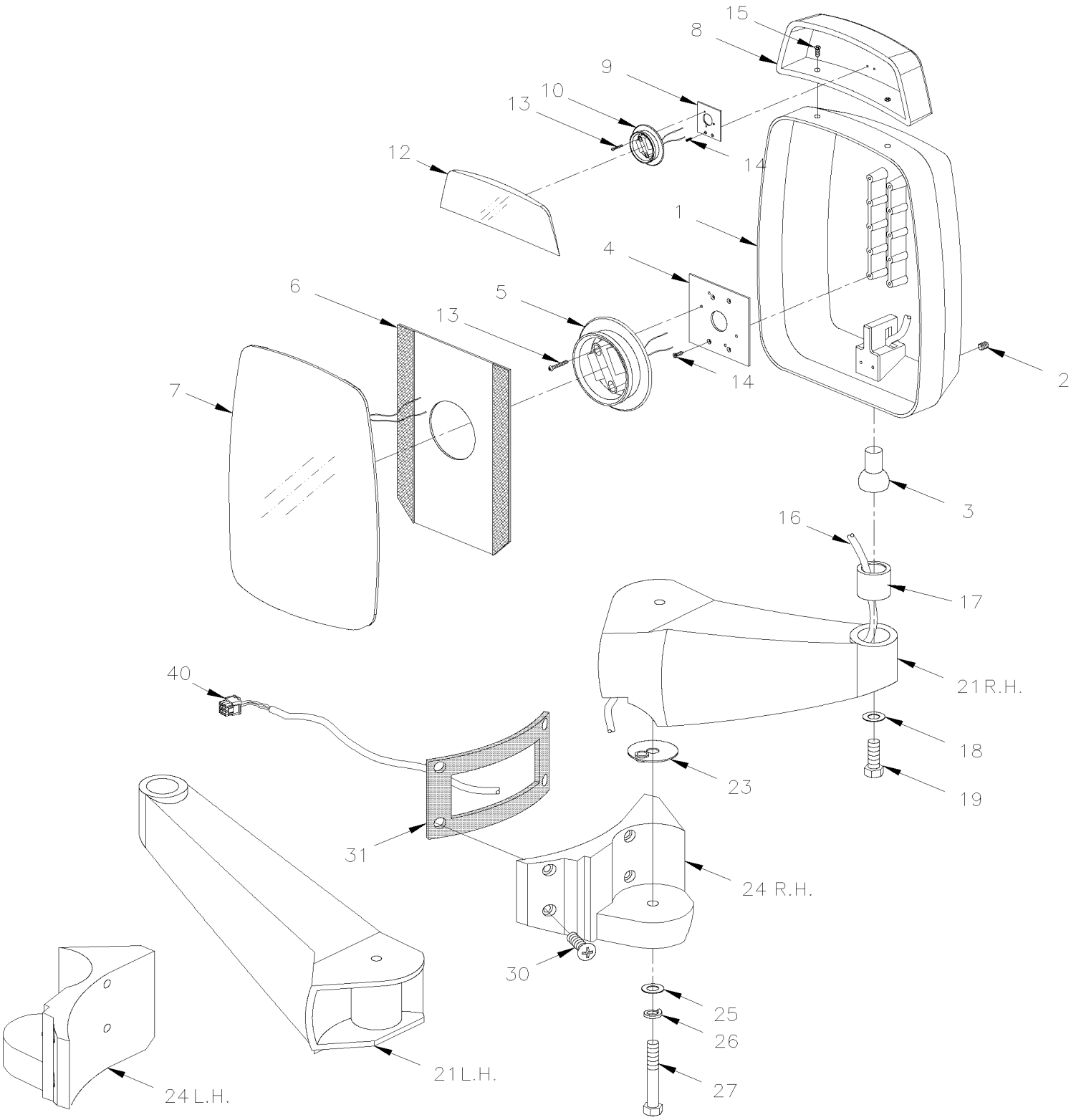

From Y-7046 To 2-7763		Date:07/2024	PAGE:Y2-1856-22
MIRROR "RAMCO" FLAT GLASS / BLACK PAINTED			

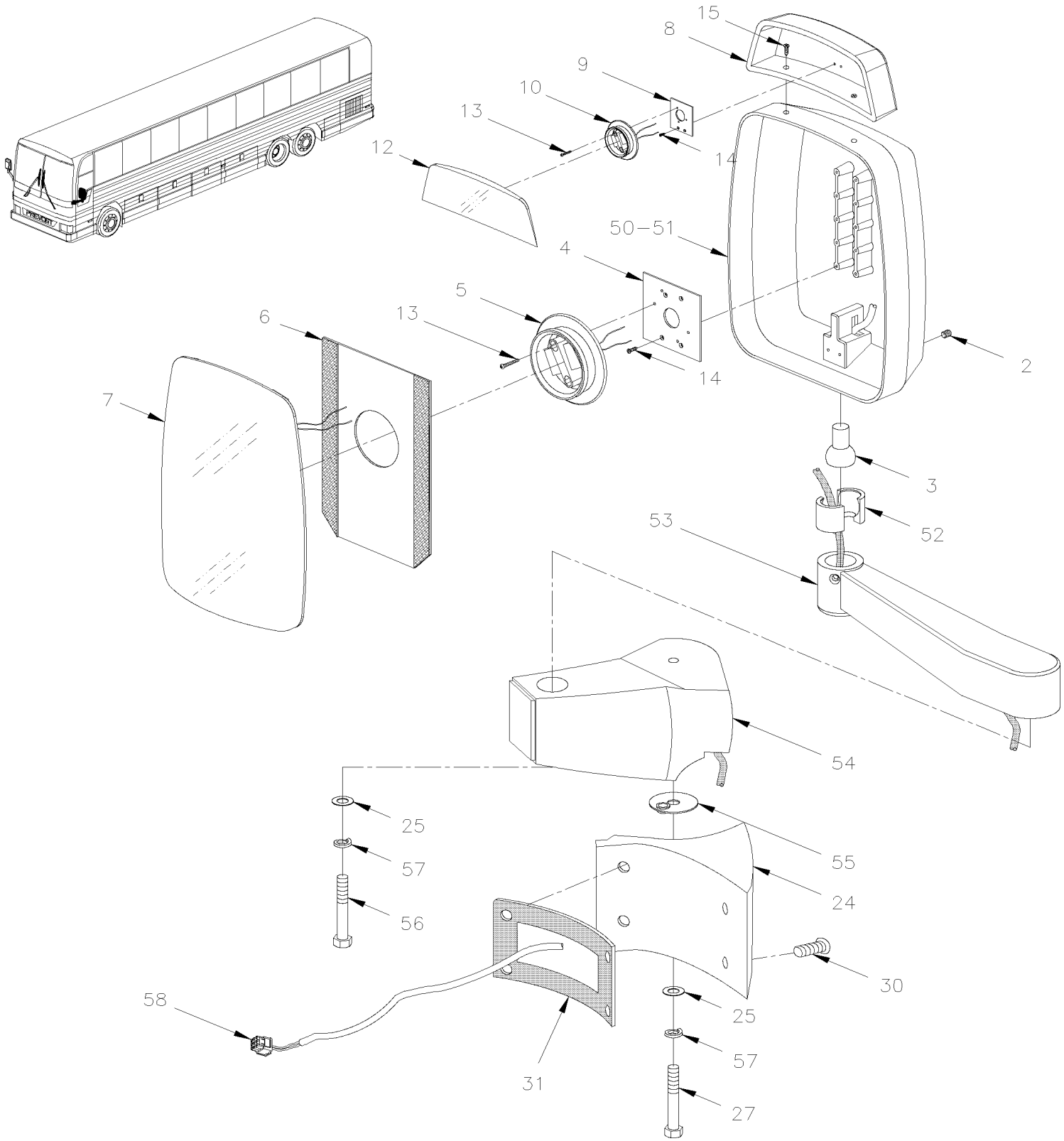

From Y-7046 To 2-7763		Date:07/2024	PAGE:Y2-1856-22

MIRROR "RAMCO" FLAT GLASS / BLACK PAINTED

Item#	Part	Description	XLII 45	XLII MTH40	XLII MTH45	XLII MTH45E	NOTES
	990328	MIRROR ASSY, R.H. / W/CONVEX ELECTRIC / W/8 PINS CONNECTOR	1				
	990327	MIRROR ASSY, L.H. / W/CONVEX ELECTRIC / W/8 PINS CONNECTOR	1				
1	990345	. HEAD ASSY / W/CONVEX ELECTRIC / W/8 PINS CONNECTOR	1				
2	502812	. . SCREW SET HEXS CUP 3/8-16X3/8 SS	1				
3	990186	. . STUD, BALL	1				
4	990272	. . NOTCHED BACK MOUNTING PLATE (2" X 3")	1				
5	990349	. . MOTOR 12V / MEDIUM / BLACK / 108MM / 4 1/4" O.D.	1				
. NS	564494	. . . TAB TERMINAL / 20-16 / AMP 63138-1	4				
6	990268	. . VELCRO PLATE / 8" X 8"	1				
7	990199	. . GLASS ASSY W/HEATER 12V	1				
8	990297	. MIRROR ASSY / CONVEX ELECTRIC	1				
9	990295	. . PLATE, TOP MOTOR MOUNTING	1				
10	990219	. . MOTOR 12V / SMALL / BLACK / 85MM / 3 5/16" O.D.	1				
. NS	564494	. . . TAB TERMINAL / 20-16 / AMP 63138-1	4				
12	990339	. . GLASS CONVEX ASSY W/HEATER 12V	1				
13	N.P.N.	. . SCREW TC FL PH ZP 6-32 X 1 1/8"	3				4
14	500660	. . SCREW TC FL PH #6-32x3/8 Z050	2				
15	990530	. . SCREW CAP HEX #10-24x1" SS	2				
NS	500787	. . NUT HEX #10-24 SS	2				
16	990377	. . CABLE ASSY / W/CONNECTOR 8PIN	1				
17	990379	. . CUP, BALL STUD RETAINER / ONE PIECE	1				
18	500270	. . WASHER FL .406x1.000x.063 SS	1				
19	N.P.N.	. . SCREW CAP HEX SS 3/8-24 X 1.250	1				4
21	990307	. ARM, L.H.	1				
21	990308	. ARM, R.H.	1				
23	990265	. WASHER ALUMINUM / 2 " O.D.	1				
NS	504082	. . SNAP BUSHING / .125x.312x.312	1				
24	990305	. BRACKET, MOUNTING R.H.	1				
24	990306	. BRACKET, MOUNTING L.H.	1				
25	500958	. WASHER FL .531x1.062x.095 SS	1				
26	500035	. WASHER LO SPT .317x.586x.078 SS	1				
27	990500	. SCREW 1/2-13x2 HHCS SS	1				
30	5001461	SCREW MA FL PH M8-1.25x40 SS	2				
30	5001581	SCREW CAP BUT HEXS M8-1.25x40 SS	2				
NS	5001341	WASHER FL 8.4x17.0x1.6 SS	2				
31	490873	GASKET, RH	1				
31	490894	GASKET, LH	1				
40	562920	CONNECTOR / SH 8C / SWITCHCRAFT EN3C8FC	2				C
NS	562919	CONNECTOR / PH 8C / SWITCHCRAFT EN3P8MC	2				C B
NS	065583	KIT, RETROFIT CONNECTOR "CONXAL" 8C	1				
. NS	IS-01082	. SEE INSTRUCTION SHEET	1				
. NS	065534	. CABLE ASSY , INTERFACE / SWITCHCRAFT & CONXAL	1				

From Y-7046 To 2-7763		Date:07/2024	PAGE:Y2-1856-22

MIRROR "RAMCO" FLAT GLASS / BLACK PAINTED

Item#	Part	Description	XLII 45	XLII MTH40	XLII MTH45	XLII MTH45E	NOTES
50	990384	MIRROR ASSY, R.H. / W/CONVEX ELECTRIC / W/9 PINS CONNECTOR / ORLEAN	1				A
51	990383	HEAD ASSY / W/CONVEX ELECTRIC / W/9 PINS CONNECTOR / ORLEAN	1				
52	990187	CUP, BALL	2				
NS	502812	SCREW SET HEXS CUP 3/8-16X3/8 SS	2				
53	990211	ARM, R.H. / 13" X 7"	1				
54	490955	ARM L.H. / (ORLEAN OPTION)	1				
55	490958	WASHER ALUMINUM / 38.1 I.D. x 57.2 O.D. x 12G	1				
56	990381	SCREW CAP HEX SS 1/2-13X5	1				
57	5001534	WASHER LO SPT .509x.873x.125 SS	2				
58	561669	CONNECTOR / UNIVERSAL MATE-N-LOK / SH 9C / AMP 1-480706-0	2				
58	561671	PIN TERMINAL / 24-18 / AMP 350690-1	2				
NS	561670	CONNECTOR / UNIVERSAL MATE-N-LOK / PH 9C / AMP 1-480707-0	2				
NS	561673	SOCKET TERMINAL / 24-18 / AMP 350689-1	18				
NS	562916	INTERFACE SEAL / 9C / AMP 794277-1	2				
NS	562918	SEAL PLUG FREE CAVITY / AMP 770377-1	2				
NS	504555	GROMMET / .500x.812x.125x.344x1.062x.031	2				
NS	**MI16-28**	**DRIP EDGE ADDITION ON FRONT MIRRORS / PRODUCT IMPROVMENT**	1				
		A) INCLUDE ITEMS 21, 24, 50					
		B) THIS CONNECTOR IT USED ON CABLE HARNESS FROM INSIDE OF VEHICULE					
		C) FOR PRODUCT IMPROVEMENT ASK KIT 065583					
		4) NO PARTS NUMBER					

From 2-7764 To 6-8906		Date:07/2024	PAGE:Y2-1856-23
MIRROR "RAMCO" FLAT GLASS / BLACK PAINTED			

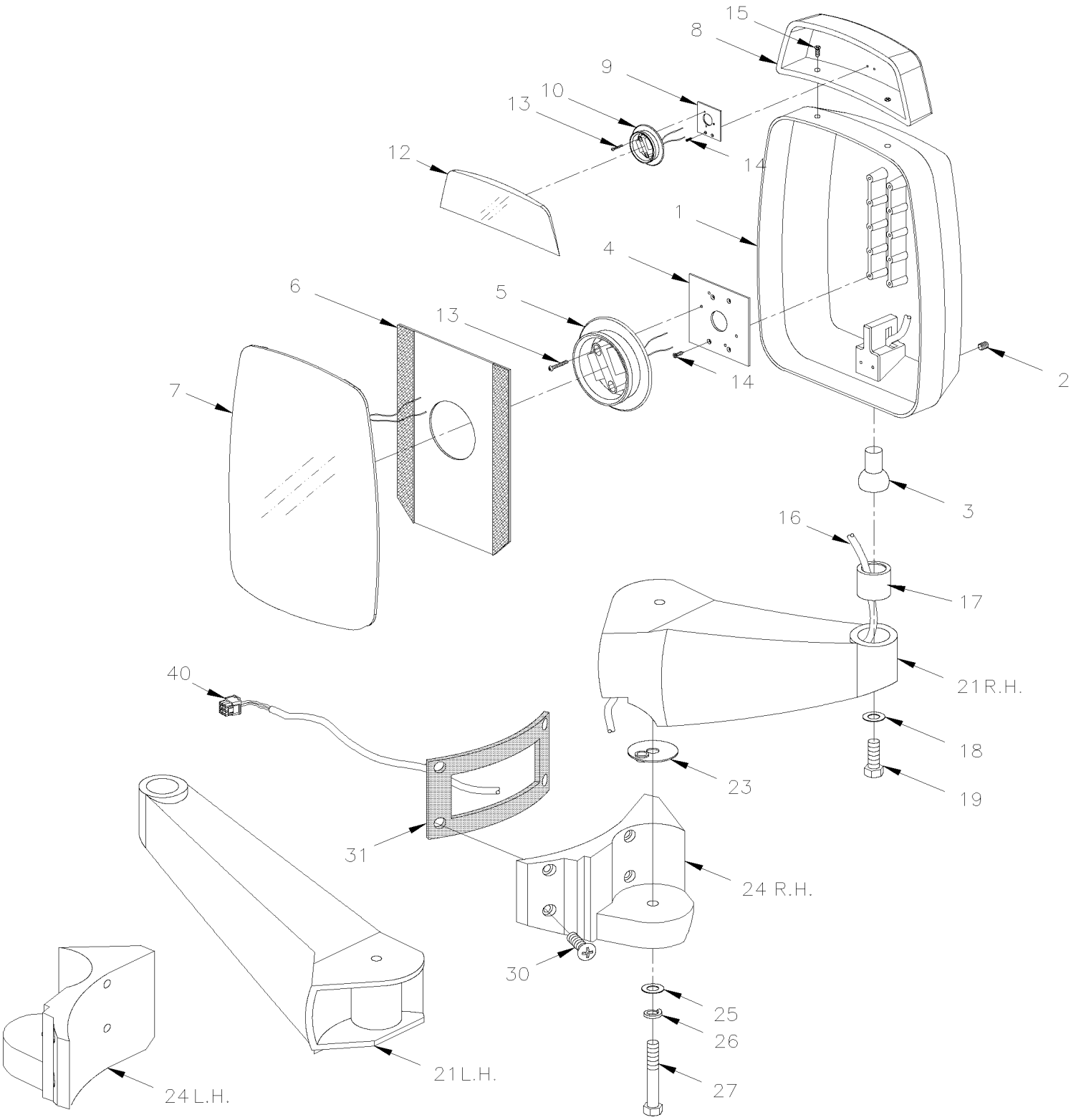

From 2-7764 To 6-8906		Date:07/2024	PAGE:Y2-1856-23
MIRROR "RAMCO" FLAT GLASS / BLACK PAINTED			

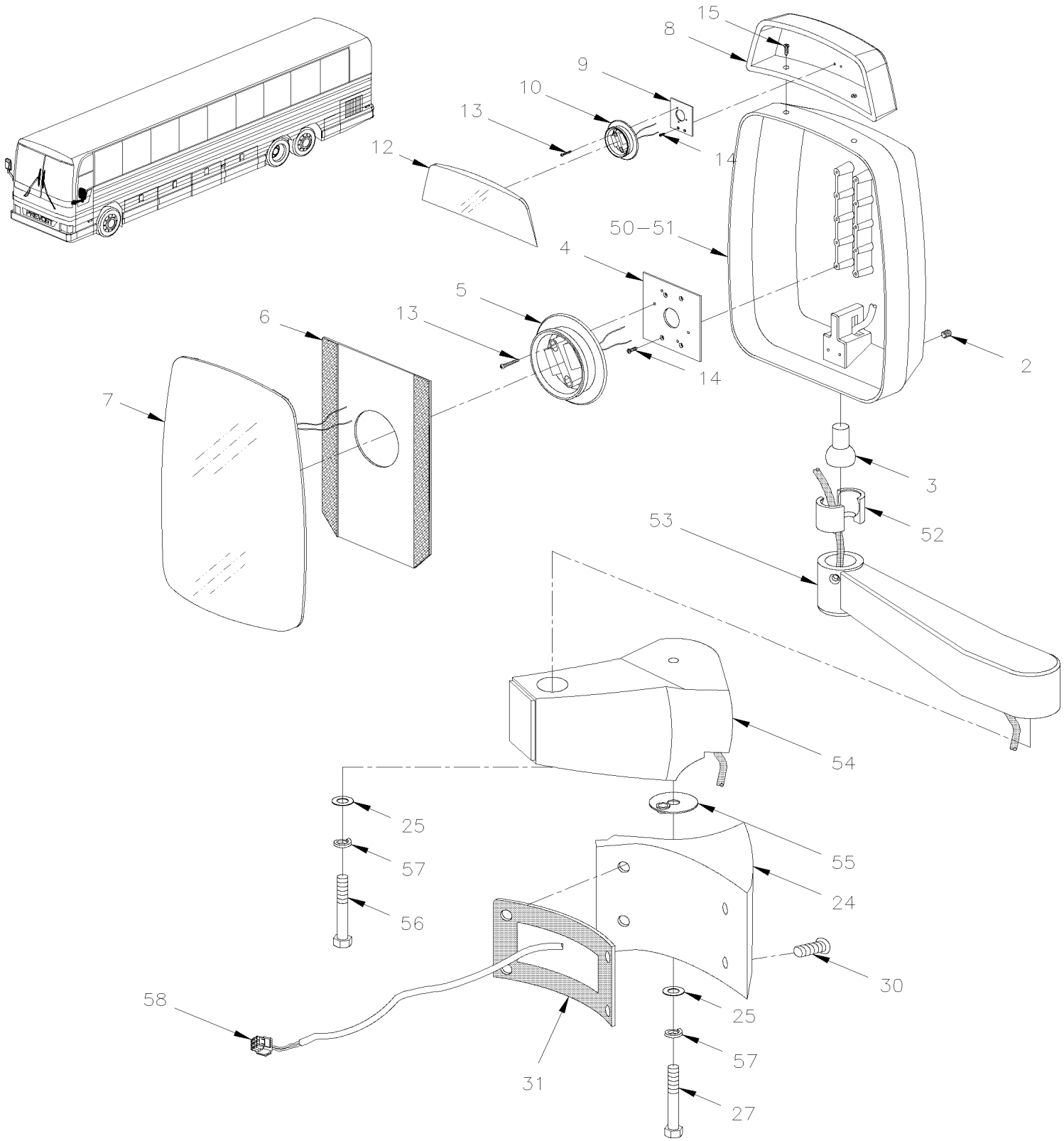

From 2-7764 To 6-8906		Date:07/2024	PAGE:Y2-1856-23

MIRROR "RAMCO" FLAT GLASS / BLACK PAINTED

Item#	Part	Description	XLII 45	XLII MTH40	XLII MTH45	XLII MTH45E	NOTES
	990363	MIRROR ASSY, R.H. / W/CONVEX ELECTRIC / W/8 PINS CONNECTOR	1				
	990361	MIRROR ASSY, R.H. / W/CONVEX MANUAL / W/5 PINS CONNECTOR	1				
	990384	MIRROR ASSY, R.H. / W/CONVEX ELECTRIC / W/9 PINS CONNECTOR / ORLEAN	1				A
	990362	MIRROR ASSY, L.H. / W/CONVEX ELECTRIC / W/8 PINS CONNECTOR To 3-8041	1				
	990407	MIRROR ASSY, L.H. / W/CONVEX ELECTRIC / W/8 PINS CONNECTOR From 3-8042	1				
	990360	MIRROR ASSY, L.H. / W/CONVEX MANUAL / W/5 PINS CONNECTOR	1				
	990415	MIRROR ASSY, L.H. / W/CONVEX ELECTRIC / W/9 PINS CONNECTOR / ORLEAN	1				A
1	990374	. HEAD ASSY / W/CONVEX ELECTRIC / W/8 PINS CONNECTOR	1				
1	990373	. HEAD ASSY / W/CONVEX MANUAL / W/5 PINS CONNECTOR	1				
1	990383	. HEAD ASSY / W/CONVEX ELECTRIC / W/9 PINS CONNECTOR / ORLEAN	1				A
2	502812	. . SCREW SET HEXS CUP 3/8-16X3/8 SS	1				
3	990186	. . STUD, BALL	1				
4	990272	. . NOTCHED BACK MOUNTING PLATE (2" X 3")	1				
5	990349	. . MOTOR 12V / MEDIUM / BLACK / 108MM / 4 1/4" O.D.	1				
. NS	564494	. . . TAB TERMINAL / 20-16 / AMP 63138-1	4				
6	990268	. . VELCRO PLATE / 8" X 8"	1				
7	990199	. . GLASS ASSY W/HEATER 12V	1				
8	990297	. MIRROR ASSY / CONVEX ELECTRIC	1				
9	990295	. . PLATE, TOP MOTOR MOUNTING	1				
10	990219	. . MOTOR 12V / SMALL / BLACK / 85MM / 3 5/16" O.D.	1				
. NS	564494	. . . TAB TERMINAL / 20-16 / AMP 63138-1	4				
10	990402	. . MECHANISM MANUAL ASSY, SMALL / 85MM / 3 5/16" O.D. / W/SNAP	1				
12	990339	. . GLASS CONVEX ASSY W/HEATER 12V	1				
13	N.P.N.	. . SCREW TC FL PH ZP 6-32 X 1 1/8"	3				4
14	500660	. . SCREW TC FL PH #6-32x3/8 Z050	2				
15	990530	. . SCREW CAP HEX #10-24x1" SS	2				
NS	500787	. . NUT HEX #10-24 SS	2				
16	N.P.N.	. . CABLE ASSY / W/CONNECTOR 8PIN / SEE ITEM # 40	1				4
17	990379	. . CUP, BALL STUD RETAINER / ONE PIECE	1				
18	500270	. . WASHER FL .406x1.000x.063 SS	1				
19	N.P.N.	. . SCREW CAP HEX SS 3/8-24 X 1.250	1				4
21	990307	. ARM, L.H. To 3-8041	1				
21	990392	. ARM, L.H. / DIRTY FREE From 3-8042	1				
21	990308	. ARM, R.H.	1				
23	990265	. WASHER ALUMINUM / 2 " O.D.	1				
NS	504082	. . SNAP BUSHING / .125x.312x.312	1				
24	990305	. BRACKET, MOUNTING R.H.	1				
24	990306	. BRACKET, MOUNTING L.H.	1				
25	500958	. WASHER FL .531x1.062x.095 SS	1				
26	500035	. WASHER LO SPT .317x.586x.078 SS	1				
27	990500	. SCREW 1/2-13x2 HHCS SS	1				
30	5001461	SCREW MA FL PH M8-1.25x40 SS	2				

From 2-7764 To 6-8906		Date:07/2024	PAGE:Y2-1856-23

MIRROR "RAMCO" FLAT GLASS / BLACK PAINTED

Item#	Part	Description	XLII 45	XLII MTH40	XLII MTH45	XLII MTH45E	NOTES
30	5001581	SCREW CAP BUT HEXS M8-1.25x40 SS	2				
NS	5001341	WASHER FL 8.4x17.0x1.6 SS	2				
31	490873	GASKET, RH	1				
31	490894	GASKET, LH	1				
40	563163	CONNECTOR / W 45" CABLE ASSY / PH 8C / CONXALL 3280-8PG-324	2				
40	563196	CONNECTOR / W 45" CABLE ASSY / PH 5C / CONXALL 3280-5PG-324	2				
NS	563088	CONNECTOR / MULTI CON X / SH 8C / CONXALL 4280-8SG-300	1				B
NS	563090	CONNECTOR / MULTI CON X / SH 5C / CONXALL 4280-5SG-300	1				B
NS	562511	SOCKET TERMINAL / 20 / CONXALL 586SG	AR				B
50	200295P	MIRROIR ASSY, L.H. / ELECTRIC / CONVEX / (ORLEAN OPTION) To 3-8041	1				A
51	990383	. HEAD ASSY / W/CONVEX ELECTRIC / W/9 PINS CONNECTOR / ORLEAN To 3-8041	1				A
52	990187	. CUP, BALL To 3-8041	2				A
NS	502812	. SCREW SET HEXS CUP 3/8-16X3/8 SS To 3-8041	2				A
53	990211	. ARM, R.H. / 13" X 7" To 3-8041	1				A
54	490955	. ARM L.H. / (ORLEAN OPTION) To 3-8041	1				A
55	490958	. WASHER ALUMINUM / 38.1 I.D. x 57.2 O.D. x 12G To 3-8041	1				A
56	990381	. SCREW CAP HEX SS 1/2-13X5 To 3-8041	1				A
57	5001534	. WASHER LO SPT .509x.873x.125 SS To 3-8041	2				A
58	561669	. CONNECTOR / UNIVERSAL MATE-N-LOK / SH 9C / AMP 1-480706-0 To 3-8041	2				A
58	561671	. PIN TERMINAL / 24-18 / AMP 350690-1 To 3-8041	2				A
NS	561670	. CONNECTOR / UNIVERSAL MATE-N-LOK / PH 9C / AMP 1-480707-0 To 3-8041	2				A
NS	561673	. SOCKET TERMINAL / 24-18 / AMP 350689-1 To 3-8041	18				A
NS	562916	. INTERFACE SEAL / 9C / AMP 794277-1 To 3-8041	2				A
NS	562918	. SEAL PLUG FREE CAVITY / AMP 770377-1 To 3-8041	2				A
NS	504555	. GROMMET / .500x.812x.125x.344x1.062x.031 To 3-8041	2				A
NS	**MI16-28**	**DRIP EDGE ADDITION ON FRONT MIRRORS / PRODUCT IMPROVMENT**	1				
		A) "OPTION ORLEAN"					
		B) THIS CONNECTOR IT USED ON CABLE HARNESS FROM INSIDE OF VEHICULE					
		4) NO PARTS NUMBER					

From Y-7046 To 2-7763		Date:07/2024	PAGE:Y2-1856-30
MIRROR "RAMCO" 2 GLASSES / SILVER PAINTED			

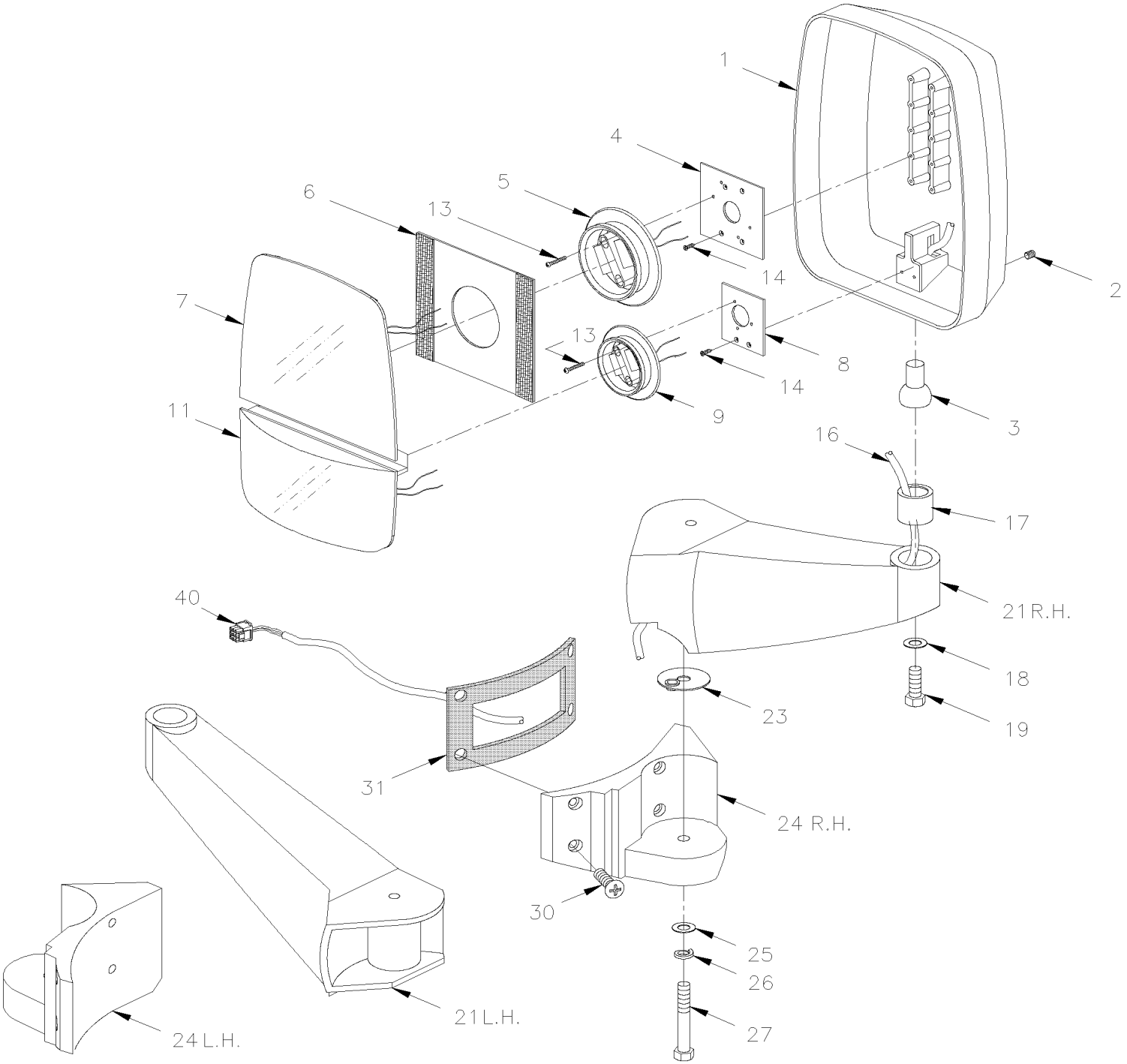

From Y-7046 To 2-7763		Date:07/2024	PAGE:Y2-1856-30

MIRROR "RAMCO" 2 GLASSES / SILVER PAINTED

Item#	Part	Description	XLII 45	XLII MTH40	XLII MTH45	XLII MTH45E	NOTES
	990324	MIRROR ASSY, R.H. / ELECTRIC / W/8 PINS CONNECTOR	1				
	990320	MIRROR ASSY, R.H. / MANUAL / W/5 PINS CONNECTOR	1				
	990323	MIRROR ASSY, L.H. / ELECTRIC / W/8 PINS CONNECTOR	1				
	990319	MIRROR ASSY, L.H. / MANUAL / W/5 PINS CONNECTOR	1				
1	990343	. HEAD ASSY / ELECTRIC / W/8 PINS CONNECTOR	1				
1	990341	. HEAD ASSY / MANUAL / W/5 PINS CONNECTOR	1				
2	502812	. . SCREW SET HEXS CUP 3/8-16X3/8 SS	1				
3	990186	. . STUD, BALL	1				
4	990272	. . NOTCHED BACK MOUNTING PLATE (2" X 3")	1				
5	990349	. . MOTOR 12V / MEDIUM / BLACK / 108MM / 4 1/4" O.D.	1				
. NS	564494	. . . TAB TERMINAL / 20-16 / AMP 63138-1	4				
6	990266	. . VELCRO PLATE / 6" X 7"	1				
7	990182	. . FLAT GLASS ASSY W/HEATER 12V	1				
8	990273	. . POWER CONVEX MOTOR BASE PLATE	1				
9	990300	. . MOTOR 12V / SMALL / BLACK / 85MM / 3 5/16" O.D.	1				
. NS	564494	. . . TAB TERMINAL / 20-16 / AMP 63138-1	4				
9	990402	. MECHANISM MANUAL ASSY, SMALL / 85MM / 3 5/16" O.D. / W/SNAP	1				
11	990338	. . CONVEX GLASS ASSY W/HEATER 12V	1				
13	N.P.N.	. . SCREW TC FL PH ZP 6-32 X 1 1/8"	3				4
14	500660	. . SCREW TC FL PH #6-32x3/8 Z050	2				
16	990377	. . CABLE ASSY / W/CONNECTOR 8PIN	1				
16	990378	. . CABLE ASSY / W/CONNECTOR 5PIN	1				
17	990379	. . CUP, BALL STUD RETAINER / ONE PIECE	1				
18	500270	. . WASHER FL .406x1.000x.063 SS	1				
19	N.P.N.	. . SCREW CAP HEX SS 3/8-24 X 1.250	1				4
21	990313	. ARM, L.H.	1				
21	990315	. ARM, R.H.	1				
23	990265	. WASHER ALUMINUM / 2 " O.D.	1				
NS	504082	. . SNAP BUSHING / .125x.312x.312	1				
24	990309	. BRACKET, MOUNTING R.H.	1				
24	990311	. BRACKET, MOUNTING L.H.	1				
25	500958	. WASHER FL .531x1.062x.095 SS	1				
26	500035	. WASHER LO SPT .317x.586x.078 SS	1				
27	990500	. SCREW 1/2-13x2 HHCS SS	1				
30	5001461	SCREW MA FL PH M8-1.25x40 SS	2				
30	5001581	SCREW CAP BUT HEXS M8-1.25x40 SS	2				
NS	5001341	WASHER FL 8.4x17.0x1.6 SS	2				
31	490873	GASKET, RH	1				
31	490894	GASKET, LH	1				
40	562920	CONNECTOR / SH 8C / SWITCHCRAFT EN3C8FC	1				A
40	562922	CONNECTOR / SH 5C / SWITCHCRAFT EN3C5FC	1				A
NS	562919	CONNECTOR / PH 8C / SWITCHCRAFT EN3P8MC	1				A B

From Y-7046 To 2-7763		Date:07/2024	PAGE:Y2-1856-30

MIRROR "RAMCO" 2 GLASSES / SILVER PAINTED

Item#	Part	Description	XLII 45	XLII MTH40	XLII MTH45	XLII MTH45E	NOTES
NS	562921	CONNECTOR / PH 5C / SWITCHCRAFT EN3P5MC	1				A B
NS	065583	KIT, RETROFIT CONNECTOR "CONXAL" 8C	1				
. NS	IS-01082	. SEE INSTRUCTION SHEET	1				
. NS	065534	. CABLE ASSY , INTERFACE / SWITCHCRAFT & CONXAL	1				
		A) FOR PRODUCT IMPROVEMENT ASK KIT 065583					
		B) THIS CONNECTOR IT USED ON CABLE HARNESS FROM INSIDE OF VEHICULE					
		4) NO PARTS NUMBER					

From 2-7764 To 6-8906		Date:07/2024	PAGE:Y2-1856-31
MIRROR "RAMCO" 2 GLASSES / SILVER PAINTED			

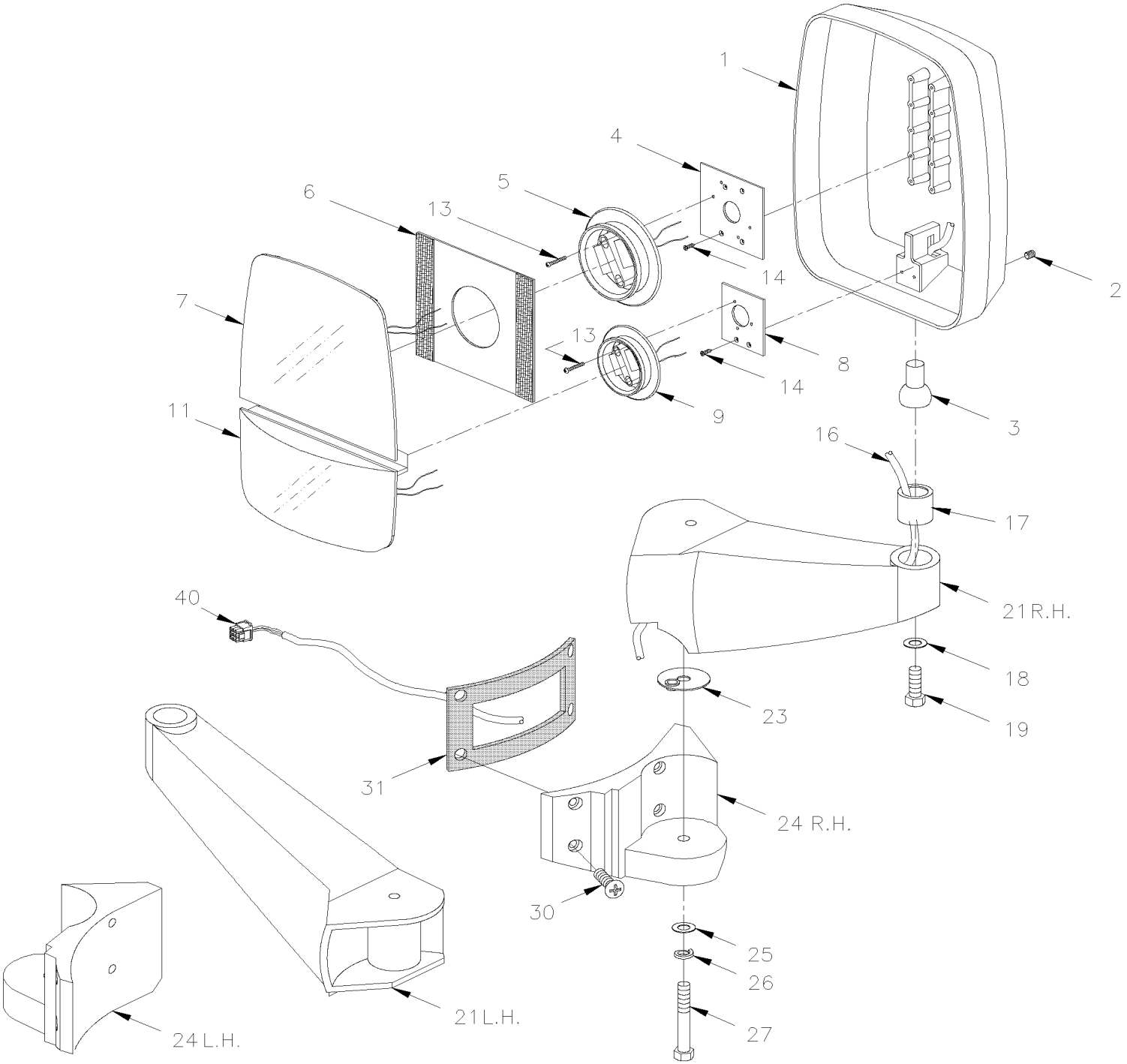

From 2-7764 To 6-8906		Date:07/2024	PAGE:Y2-1856-31

MIRROR "RAMCO" 2 GLASSES / SILVER PAINTED

Item#	Part	Description	XLII 45	XLII MTH40	XLII MTH45	XLII MTH45E	NOTES
	990357	MIRROR ASSY, R.H. / ELECTRIC / W/8 PINS CONNECTOR	1				
	990353	MIRROR ASSY, R.H. / MANUAL / W/5 PINS CONNECTOR	1				
	990356	MIRROR ASSY, L.H. / ELECTRIC / W/8 PINS CONNECTOR To 3-8041	1				
	990404	MIRROR ASSY, L.H. / ELECTRIC / W/8 PINS CONNECTOR From 3-8042	1				
	990352	MIRROR ASSY, L.H. / MANUAL / W/5 PINS CONNECTOR	1				
1	990371	. HEAD ASSY / ELECTRIC / W/8 PINS CONNECTOR	1				
1	990369	. HEAD ASSY / MANUAL / W/5 PINS CONNECTOR	1				
2	502812	. . SCREW SET HEXS CUP 3/8-16X3/8 SS	1				
3	990186	. . STUD, BALL	1				
4	990272	. . NOTCHED BACK MOUNTING PLATE (2" X 3")	1				
5	990349	. . MOTOR 12V / MEDIUM / BLACK / 108MM / 4 1/4" O.D.	1				
. NS	564494	. . . TAB TERMINAL / 20-16 / AMP 63138-1	4				
6	990266	. . VELCRO PLATE / 6" X 7"	1				
7	990182	. . FLAT GLASS ASSY W/HEATER 12V	1				
8	990273	. . POWER CONVEX MOTOR BASE PLATE	1				
9	990219	. . MOTOR 12V / SMALL / BLACK / 85MM / 3 5/16" O.D.	1				
. NS	564494	. . . TAB TERMINAL / 20-16 / AMP 63138-1	4				
9	990402	MECHANISM MANUAL ASSY, SMALL / 85MM / 3 5/16" O.D. / W/SNAP	1				
11	990338	. . CONVEX GLASS ASSY W/HEATER 12V	1				
13	N.P.N.	. . SCREW TC FL PH ZP 6-32 X 1 1/8"	3				4
14	500660	. . SCREW TC FL PH #6-32x3/8 Z050	2				
16	N.P.N.	. . CABLE ASSY / W/CONNECTOR 8PIN / SEE ITEM # 40	1				4
16	N.P.N.	. . CABLE ASSY / W/CONNECTOR 5PIN / SEE ITEM # 40	1				4
17	990379	. . CUP, BALL STUD RETAINER / ONE PIECE	1				
18	500270	. . WASHER FL .406x1.000x.063 SS	1				
19	N.P.N.	. . SCREW CAP HEX SS 3/8-24 X 1.250	1				4
21	990313	. ARM, L.H. To 3-8041	1				
21	990393	. ARM, L.H. / DIRTY FREE From 3-8042	1				
21	990315	. ARM, R.H.	1				
23	990265	. WASHER ALUMINUM / 2 " O.D.	1				
NS	504082	. . SNAP BUSHING / .125x.312x.312	1				
24	990309	. BRACKET, MOUNTING R.H.	1				
24	990311	. BRACKET, MOUNTING L.H.	1				
25	500958	. WASHER FL .531x1.062x.095 SS	1				
26	500035	. WASHER LO SPT .317x.586x.078 SS	1				
27	990500	. SCREW 1/2-13x2 HHCS SS	1				
30	5001461	SCREW MA FL PH M8-1.25x40 SS	2				
30	5001581	SCREW CAP BUT HEXS M8-1.25x40 SS	2				
NS	5001341	WASHER FL 8.4x17.0x1.6 SS	2				
31	490873	GASKET, RH	1				
31	490894	GASKET, LH	1				
40	563163	CONNECTOR / W 45" CABLE ASSY / PH 8C / CONXALL 3280-8PG-324	1				

From 2-7764 To 6-8906		Date:07/2024	PAGE:Y2-1856-31

MIRROR "RAMCO" 2 GLASSES / SILVER PAINTED

Item#	Part	Description	XLII 45	XLII MTH40	XLII MTH45	XLII MTH45E	NOTES
40	563196	CONNECTOR / W 45" CABLE ASSY / PH 5C / CONXALL 3280-5PG-324	1				
NS	563088	CONNECTOR / MULTI CON X / SH 8C / CONXALL 4280-8SG-300	1				B
NS	563090	CONNECTOR / MULTI CON X / SH 5C / CONXALL 4280-5SG-300	1				B
NS	562511	SOCKET TERMINAL / 20 / CONXALL 586SG	AR				B
		B) THIS CONNECTOR IT USED ON CABLE HARNESS FROM INSIDE OF VEHICULE					
		4) NO PARTS NUMBER					

From Y-7046 To 2-7763		Date:07/2024	PAGE:Y2-1856-32
MIRROR "RAMCO" 2 GLASSES / BLACK PAINTED			

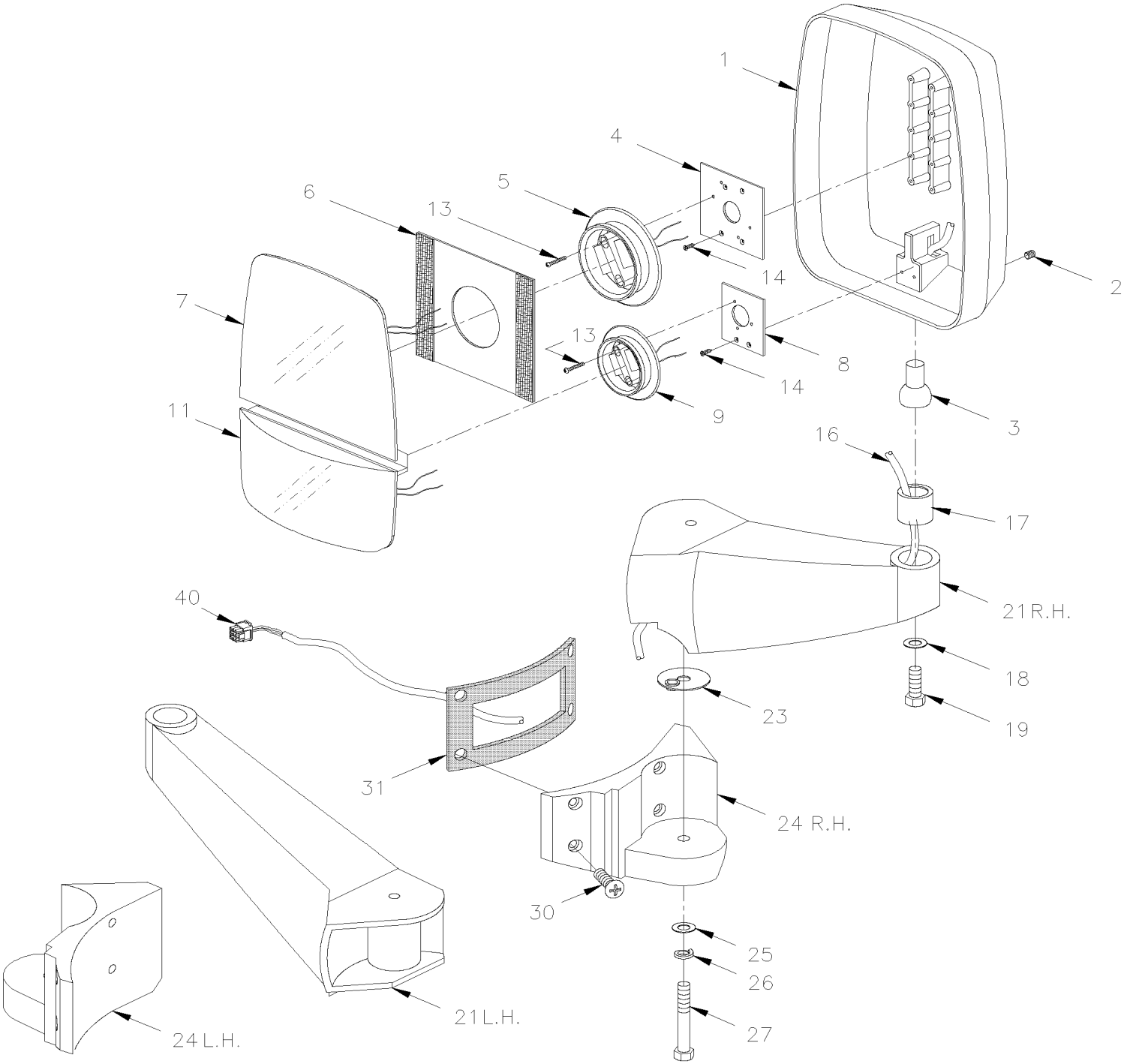

From Y-7046 To 2-7763		Date:07/2024	PAGE:Y2-1856-32

MIRROR "RAMCO" 2 GLASSES / BLACK PAINTED

Item#	Part	Description	XLII 45	XLII MTH40	XLII MTH45	XLII MTH45E	NOTES
	990322	MIRROR ASSY, R.H. / ELECTRIC / W/8 PINS CONNECTOR	1				
	990318	MIRROR ASSY, R.H. / MANUAL / W/5 PINS CONNECTOR	1				
	990321	MIRROR ASSY, L.H. / ELECTRIC / W/8 PINS CONNECTOR	1				
	990317	MIRROR ASSY, L.H. / MANUAL / W/5 PINS CONNECTOR	1				
1	990342	. HEAD ASSY / ELECTRIC / W/8 PINS CONNECTOR	1				
1	990340	. HEAD ASSY / MANUAL / W/5 PINS CONNECTOR	1				
2	502812	. . SCREW SET HEXS CUP 3/8-16X3/8 SS	1				
3	990186	. . STUD, BALL	1				
4	990272	. . NOTCHED BACK MOUNTING PLATE (2" X 3")	1				
5	990349	. . MOTOR 12V / MEDIUM / BLACK / 108MM / 4 1/4" O.D.	1				
. NS	564494	. . . TAB TERMINAL / 20-16 / AMP 63138-1	4				
6	990266	. . . VELCRO PLATE / 6" X 7"	1				
7	990182	. . FLAT GLASS ASSY W/HEATER 12V	1				
8	990273	. . POWER CONVEX MOTOR BASE PLATE	1				
9	990219	. . MOTOR 12V / SMALL / BLACK / 85MM / 3 5/16" O.D.	1				
. NS	564494	. . . TAB TERMINAL / 20-16 / AMP 63138-1	4				
9	990402	. . MECHANISM MANUAL ASSY, SMALL / 85MM / 3 5/16" O.D. / W/SNAP	1				
11	990338	. . CONVEX GLASS ASSY W/HEATER 12V	1				
12	990282	. . CABLE ASSY W/2 WIRES HEATER ELEMENT	1				
13	N.P.N.	. . SCREW TC FL PAN PH ZP 6-32 X 1 1/8"	7				4
14	500660	. . SCREW TC FL PH #6-32x3/8 Z050	2				
16	990377	. . CABLE ASSY / W/CONNECTOR 8PIN	1				
16	990378	. . CABLE ASSY / W/CONNECTOR 5PIN	1				
17	990379	. . CUP, BALL STUD RETAINER / ONE PIECE	1				
18	500270	. . WASHER FL .406x1.000x.063 SS	1				
19	N.P.N.	. . SCREW CAP HEX SS 3/8-24 X 1.250	1				4
21	990307	. ARM, L.H.	1				
NS	990308	. ARM, R.H.	1				
23	990265	. WASHER ALUMINUM / 2 " O.D.	1				
NS	504082	. . SNAP BUSHING / .125x.312x.312	1				
24	990305	. BRACKET, MOUNTING R.H.	1				
24	990306	. BRACKET, MOUNTING L.H.	1				
25	500958	. WASHER FL .531x1.062x.095 SS	1				
26	500035	. WASHER LO SPT .317x.586x.078 SS	1				
27	990500	. SCREW 1/2-13x2 HHCS SS	1				
30	5001461	SCREW MA FL PH M8-1.25x40 SS	2				
30	5001581	SCREW CAP BUT HEXS M8-1.25x40 SS	2				
NS	5001341	WASHER FL 8.4x17.0x1.6 SS	2				
31	490873	GASKET, RH	1				
31	490894	GASKET, LH	1				
40	562920	CONNECTOR / SH 8C / SWITCHCRAFT EN3C8FC	1				A
40	562922	CONNECTOR / SH 5C / SWITCHCRAFT EN3C5FC	1				A

From Y-7046 To 2-7763		Date:07/2024	PAGE:Y2-1856-32

MIRROR "RAMCO" 2 GLASSES / BLACK PAINTED

Item#	Part	Description	XLII 45	XLII MTH40	XLII MTH45	XLII MTH45E	NOTES
NS	562919	CONNECTOR / PH 8C / SWITCHCRAFT EN3P8MC	2				A B
NS	562921	CONNECTOR / PH 5C / SWITCHCRAFT EN3P5MC	2				A B
NS	065583	KIT, RETROFIT CONNECTOR "CONXAL" 8C	1				
. NS	IS-01082	. SEE INSTRUCTION SHEET	1				
. NS	065534	. CABLE ASSY , INTERFACE / SWITCHCRAFT & CONXAL	1				
		A) FOR PRODUCT IMPROVEMENT ASK KIT 065583					
		B) THIS CONNECTOR IT USED ON CABLE HARNESS FROM INSIDE OF VEHICULE					
		4) NO PARTS NUMBER					

From 2-7764 To 6-8906		Date:07/2024	PAGE:Y2-1856-33
MIRROR "RAMCO" 2 GLASSES / BLACK PAINTED			

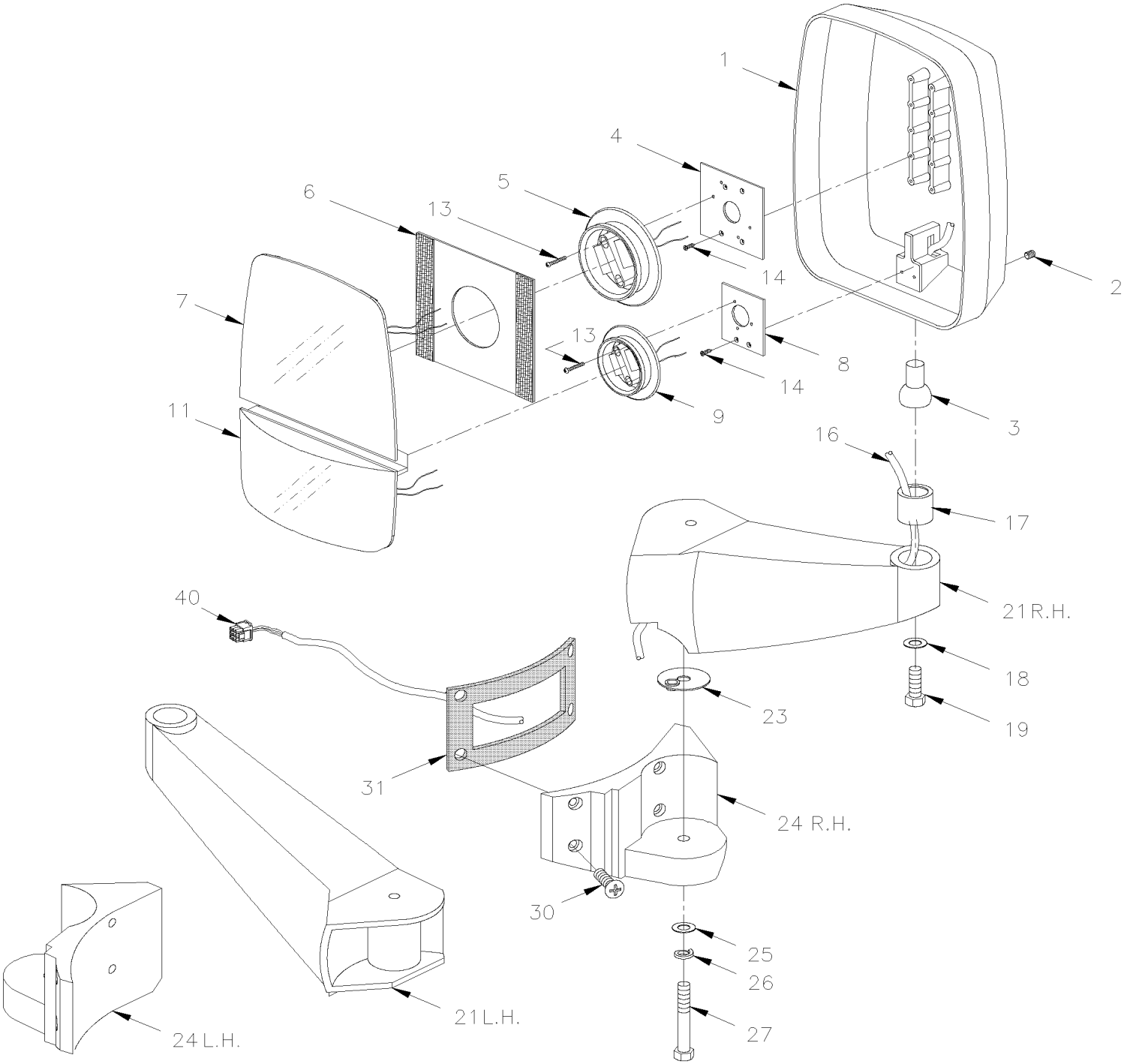

From 2-7764 To 6-8906		Date:07/2024	PAGE:Y2-1856-33

MIRROR "RAMCO" 2 GLASSES / BLACK PAINTED

Item#	Part	Description	XLII 45	XLII MTH40	XLII MTH45	XLII MTH45E	NOTES
	990355	MIRROR ASSY, R.H. / ELECTRIC / W/8 PINS CONNECTOR	1				
	990351	MIRROR ASSY, R.H. / MANUAL / W/5 PINS CONNECTOR	1				
	990354	MIRROR ASSY, L.H. / ELECTRIC / W/8 PINS CONNECTOR To 3-8041	1				
	990403	MIRROR ASSY, L.H. / ELECTRIC / W/8 PINS CONNECTOR From 3-8042	1				
	990350	MIRROR ASSY, L.H. / MANUAL / W/5 PINS CONNECTOR	1				
1	990370	. HEAD ASSY / ELECTRIC / W/8 PINS CONNECTOR	1				
1	990368	. HEAD ASSY / MANUAL / W/5 PINS CONNECTOR	1				
2	502812	. . SCREW SET HEXS CUP 3/8-16X3/8 SS	1				
3	990186	. . STUD, BALL	1				
4	990272	. . NOTCHED BACK MOUNTING PLATE (2" X 3")	1				
5	990349	. . MOTOR 12V / MEDIUM / BLACK / 108MM / 4 1/4" O.D.	1				
. NS	564494	. . . TAB TERMINAL / 20-16 / AMP 63138-1	4				
6	990266	. . . VELCRO PLATE / 6" X 7"	1				
7	990182	. . FLAT GLASS ASSY W/HEATER 12V	1				
8	990273	. . POWER CONVEX MOTOR BASE PLATE	1				
9	990219	. . MOTOR 12V / SMALL / BLACK / 85MM / 3 5/16" O.D.	1				
. NS	564494	. . . TAB TERMINAL / 20-16 / AMP 63138-1	4				
9	990402	. . MECHANISM MANUAL ASSY, SMALL / 85MM / 3 5/16" O.D. / W/SNAP	1				
11	990338	. . CONVEX GLASS ASSY W/HEATER 12V	1				
12	990282	. . CABLE ASSY W/2 WIRES HEATER ELEMENT	1				
13	N.P.N.	. . SCREW TC FL PAN PH ZP 6-32 X 1 1/8"	7				4
14	500660	. . SCREW TC FL PH #6-32x3/8 Z050	2				
16	N.P.N.	. . CABLE ASSY / W/CONNECTOR 8PIN / SEE ITEM # 40	1				4
16	N.P.N.	. . CABLE ASSY / W/CONNECTOR 5PIN / SEE ITEM # 40	1				4
17	990379	. . CUP, BALL STUD RETAINER / ONE PIECE	1				
18	500270	. . WASHER FL .406x1.000x.063 SS	1				
19	N.P.N.	. . SCREW CAP HEX SS 3/8-24 X 1.250	1				4
21	990307	. ARM, L.H. To 3-8041	1				
21	990392	. ARM, L.H. / DIRTY FREE From 3-8042	1				
NS	990308	. ARM, R.H.	1				
23	990265	. WASHER ALUMINUM / 2 " O.D.	1				
NS	504082	. . SNAP BUSHING / .125x.312x.312	1				
24	990305	. BRACKET, MOUNTING R.H.	1				
24	990306	. BRACKET, MOUNTING L.H.	1				
25	500958	. WASHER FL .531x1.062x.095 SS	1				
26	500035	. WASHER LO SPT .317x.586x.078 SS	1				
27	990500	. SCREW 1/2-13x2 HHCS SS	1				
30	5001461	SCREW MA FL PH M8-1.25x40 SS	2				
30	5001581	SCREW CAP BUT HEXS M8-1.25x40 SS	2				
NS	5001341	WASHER FL 8.4x17.0x1.6 SS	2				
31	490873	GASKET, RH	1				
31	490894	GASKET, LH	1				

From 2-7764 To 6-8906		Date:07/2024	PAGE:Y2-1856-33

MIRROR "RAMCO" 2 GLASSES / BLACK PAINTED

Item#	Part	Description	XLII 45	XLII MTH40	XLII MTH45	XLII MTH45E	NOTES
40	563163	CONNECTOR / W 45" CABLE ASSY / PH 8C / CONXALL 3280-8PG-324	1				
40	563196	CONNECTOR / W 45" CABLE ASSY / PH 5C / CONXALL 3280-5PG-324	1				
NS	563088	CONNECTOR / MULTI CON X / SH 8C / CONXALL 4280-8SG-300	2				B
NS	563090	CONNECTOR / MULTI CON X / SH 5C / CONXALL 4280-5SG-300	2				B
NS	562511	SOCKET TERMINAL / 20 / CONXALL 586SG	AR				B
		B) THIS CONNECTOR IT USED ON CABLE HARNESS FROM INSIDE OF VEHICULE					
		4) NO PARTS NUMBER					

From Y-7046 To 2-7763		Date:07/2024	PAGE:Y2-1856-50
MIRROR "RAMCO" FLAT GLASS / CHROME			

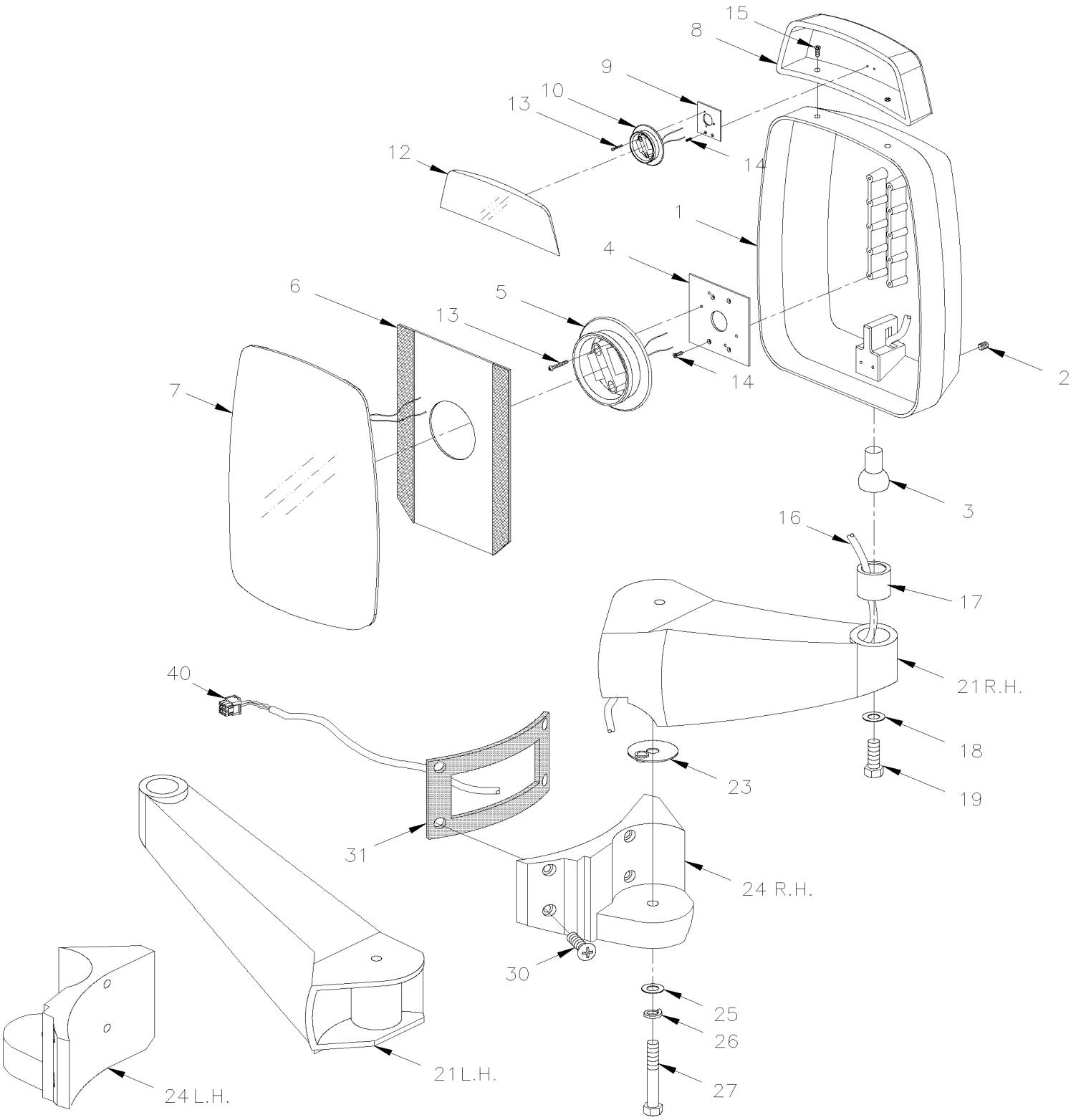

From Y-7046 To 2-7763		Date:07/2024	PAGE:Y2-1856-50

MIRROR "RAMCO" FLAT GLASS / CHROME

Item#	Part	Description	XLII 45	XLII MTH40	XLII MTH45	XLII MTH45E	NOTES
	990331	MIRROR ASSY, L.H. / W/CONVEX ELECTRIC / W/8 PINS CONNECTOR	1	1	1	1	
	990332	MIRROR ASSY, R.H. / W/CONVEX ELECTRIC / W/8 PINS CONNECTOR	1	1	1	1	
1	990347	. HEAD ASSY / W/CONVEX ELECTRIC / W/8 PINS CONNECTOR	1	1	1	1	
2	502812	. . SCREW SET HEXS CUP 3/8-16X3/8 SS	1	1	1	1	
3	990186	. . STUD, BALL	1	1	1	1	
4	990272	. . NOTCHED BACK MOUNTING PLATE (2" X 3")	1	1	1	1	
5	990349	. . MOTOR 12V / MEDIUM / BLACK / 108MM / 4 1/4" O.D.	1	1	1	1	
. NS	564494	. . . TAB TERMINAL / 20-16 / AMP 63138-1	4	4	4	4	
6	990268	. . VELCRO PLATE / 8" X 8"	1	1	1	1	
7	990199	. . GLASS ASSY W/HEATER 12V	1	1	1	1	
8	990302	. MIRROR ASSY / CONVEX ELECTRIC	1	1	1	1	
9	990295	. . PLATE, TOP MOTOR MOUNTING	1	1	1	1	
10	990219	. . MOTOR 12V / SMALL / BLACK / 85MM / 3 5/16" O.D.	1	1	1	1	
. NS	564494	. . . TAB TERMINAL / 20-16 / AMP 63138-1	4	4	4	4	
12	990339	. . GLASS CONVEX ASSY W/HEATER 12V	1	1	1	1	
13	N.P.N.	. . SCREW TC FL PH ZP 6-32 X 1 1/8"	3	3	3	3	4
14	500660	. . SCREW TC FL PH #6-32x3/8 Z050	2	2	2	2	
15	990530	. . SCREW CAP HEX #10-24x1" SS	2	2	2	2	
NS	500787	. . NUT HEX #10-24 SS	2	2	2	2	
16	990377	. . CABLE ASSY / W/CONNECTOR 8PIN	1	1	1	1	
17	990379	. . CUP, BALL STUD RETAINER / ONE PIECE	1	1	1	1	
18	500270	. . WASHER FL .406x1.000x.063 SS	1	1	1	1	
19	N.P.N.	. . SCREW CAP HEX SS 3/8-24 X 1.250	1	1	1	1	4
21	990316	. ARM, R.H.	1	1	1	1	
21	990314	. ARM, L.H.	1	1	1	1	
23	990265	. WASHER ALUMINUM / 2 " O.D.	1	1	1	1	
NS	504082	. . SNAP BUSHING / .125x.312x.312	1	1	1	1	
24	990310	. BRACKET, MOUNTING R.H.	1	1	1	1	
24	990312	. BRACKET, MOUNTING L.H.	1	1	1	1	
25	500958	. WASHER FL .531x1.062x.095 SS	1	1	1	1	
26	500035	. WASHER LO SPT .317x.586x.078 SS	1	1	1	1	
27	990500	. SCREW 1/2-13x2 HHCS SS	1	1	1	1	
30	5001461	SCREW MA FL PH M8-1.25x40 SS	2	2	2	2	
30	5001581	SCREW CAP BUT HEXS M8-1.25x40 SS	2	2	2	2	
NS	5001341	WASHER FL 8.4x17.0x1.6 SS	2	2	2	2	
31	490873	GASKET, RH	1	1	1	1	
31	490894	GASKET, LH	1	1	1	1	
40	562920	CONNECTOR / SH 8C / SWITCHCRAFT EN3C8FC	2	2	2	2	A
NS	562919	CONNECTOR / PH 8C / SWITCHCRAFT EN3P8MC	2	2	2	2	A B
NS	065583	KIT, RETROFIT CONNECTOR "CONXAL" 8C	1	1	1	1	
. NS	IS-01082	. SEE INSTRUCTION SHEET	1	1	1	1	
. NS	065534	. CABLE ASSY , INTERFACE / SWITCHCRAFT & CONXAL	1	1	1	1	

From Y-7046 To 2-7763		Date:07/2024	PAGE:Y2-1856-50

MIRROR "RAMCO" FLAT GLASS / CHROME

Item#	Part	Description	XLII 45	XLII MTH40	XLII MTH45	XLII MTH45E	NOTES
NS	**MI16-28**	**DRIP EDGE ADDITION ON FRONT MIRRORS / PRODUCT IMPROVMENT**	1	1	1	1	
		A) FOR PRODUCT IMPROVEMENT ASK KIT 065583					
		B) THIS CONNECTOR IT USED ON CABLE HARNESS FROM INSIDE OF VEHICULE					
		4) NO PARTS NUMBER					

From 2-7764 To 8-9339		Date:07/2024	PAGE:Y2-1856-51
MIRROR "RAMCO" FLAT GLASS / CHROME			

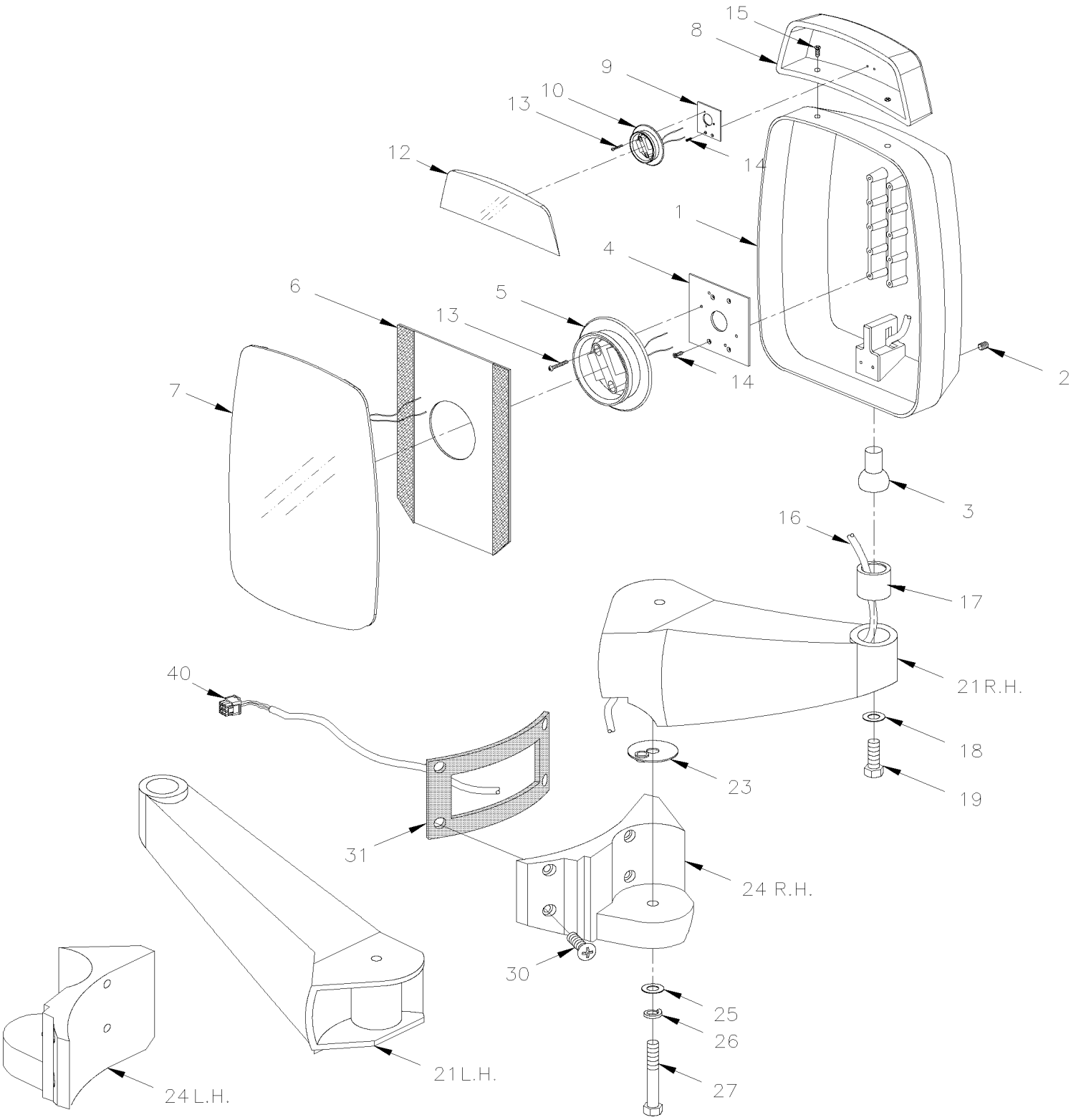

From 2-7764 To 8-9339		Date:07/2024	PAGE:Y2-1856-51

MIRROR "RAMCO" FLAT GLASS / CHROME

Item#	Part	Description	XLII 45	XLII MTH40	XLII MTH45	XLII MTH45E	NOTES
	990366	MIRROR ASSY, L.H. / W/CONVEX ELECTRIC / W/8 PINS CONNECTOR To 3-8041	1	1	1	1	
	990409	MIRROR ASSY, L.H. / W/CONVEX ELECTRIC / W/8 PINS CONNECTOR From 3-8042	1	1	1	1	
	990367	MIRROR ASSY, R.H. / W/CONVEX ELECTRIC / W/8 PINS CONNECTOR	1	1	1	1	
1	990376	. HEAD ASSY / W/CONVEX ELECTRIC / W/8 PINS CONNECTOR	1	1	1	1	
2	502812	. . SCREW SET HEXS CUP 3/8-16X3/8 SS	1	1	1	1	
3	990186	. . STUD, BALL	1	1	1	1	
4	990272	. . NOTCHED BACK MOUNTING PLATE (2" X 3")	1	1	1	1	
5	990349	. . MOTOR 12V / MEDIUM / BLACK / 108MM / 4 1/4" O.D.	1	1	1	1	
. NS	564494	. . . TAB TERMINAL / 20-16 / AMP 63138-1	4	4	4	4	
6	990268	. . VELCRO PLATE / 8" X 8"	1	1	1	1	
7	990199	. . GLASS ASSY W/HEATER 12V	1	1	1	1	
8	990302	. MIRROR ASSY / CONVEX ELECTRIC	1	1	1	1	
9	990295	. . PLATE, TOP MOTOR MOUNTING	1	1	1	1	
10	990219	. . MOTOR 12V / SMALL / BLACK / 85MM / 3 5/16" O.D.	1	1	1	1	
. NS	564494	. . . TAB TERMINAL / 20-16 / AMP 63138-1	4	4	4	4	
12	990339	. . GLASS CONVEX ASSY W/HEATER 12V	1	1	1	1	
13	N.P.N.	. . SCREW TC FL PH ZP 6-32 X 1 1/8"	3	3	3	3	4
14	500660	. . SCREW TC FL PH #6-32x3/8 Z050	2	2	2	2	
15	990530	. . SCREW CAP HEX #10-24x1" SS	2	2	2	2	
NS	500787	. . NUT HEX #10-24 SS	2	2	2	2	
16	N.P.N.	. . CABLE ASSY / W/CONNECTOR 8PIN / SEE ITEM # 40	1	1	1	1	4
17	990379	. . CUP, BALL STUD RETAINER / ONE PIECE	1	1	1	1	
18	500270	. . WASHER FL .406x1.000x.063 SS	1	1	1	1	
19	N.P.N.	. . SCREW CAP HEX SS 3/8-24 X 1.250	1	1	1	1	4
21	990316	. ARM, R.H.	1	1	1	1	
21	990314	. ARM, L.H. To 3-8041	1	1	1	1	
21	990394	. ARM, L.H. / DIRTY FREE From 3-8042	1	1	1	1	
23	990265	. WASHER ALUMINUM / 2 " O.D.	1	1	1	1	
NS	504082	. . SNAP BUSHING / .125x.312x.312	1	1	1	1	
24	990310	. BRACKET, MOUNTING R.H.	1	1	1	1	
24	990312	. BRACKET, MOUNTING L.H.	1	1	1	1	
25	500958	. WASHER FL .531x1.062x.095 SS	1	1	1	1	
26	500035	. WASHER LO SPT .317x.586x.078 SS	1	1	1	1	
27	990500	. SCREW 1/2-13x2 HHCS SS	1	1	1	1	
30	5001461	SCREW MA FL PH M8-1.25x40 SS	2	2	2	2	
30	5001581	SCREW CAP BUT HEXS M8-1.25x40 SS	2	2	2	2	
NS	5001341	WASHER FL 8.4x17.0x1.6 SS	2	2	2	2	
31	490873	GASKET, RH	1	1	1	1	
31	490894	GASKET, LH	1	1	1	1	
40	563163	CONNECTOR / W 45" CABLE ASSY / PH 8C / CONXALL 3280-8PG-324	2	2	2	2	
NS	563088	CONNECTOR / MULTI CON X / SH 8C / CONXALL 4280-8SG-300	2	2	2	2	B
NS	562511	SOCKET TERMINAL / 20 / CONXALL 586SG	AR	AR	AR	AR	B

From 2-7764 To 8-9339		Date:07/2024	PAGE:Y2-1856-51

MIRROR "RAMCO" FLAT GLASS / CHROME

Item#	Part	Description	XLII 45	XLII MTH40	XLII MTH45	XLII MTH45E	NOTES
NS	MI16-28	DRIP EDGE ADDITION ON FRONT MIRRORS / PRODUCT IMPROVMENT	1	1	1	1	
		B) THIS CONNECTOR IT USED ON CABLE HARNESS FROM INSIDE OF VEHICULE					
		4) NO PARTS NUMBER					

From Y-7046 To 2-7763		Date:07/2024	PAGE:Y2-1856-60
MIRROR "RAMCO" 2 GLASSES / CHROME			

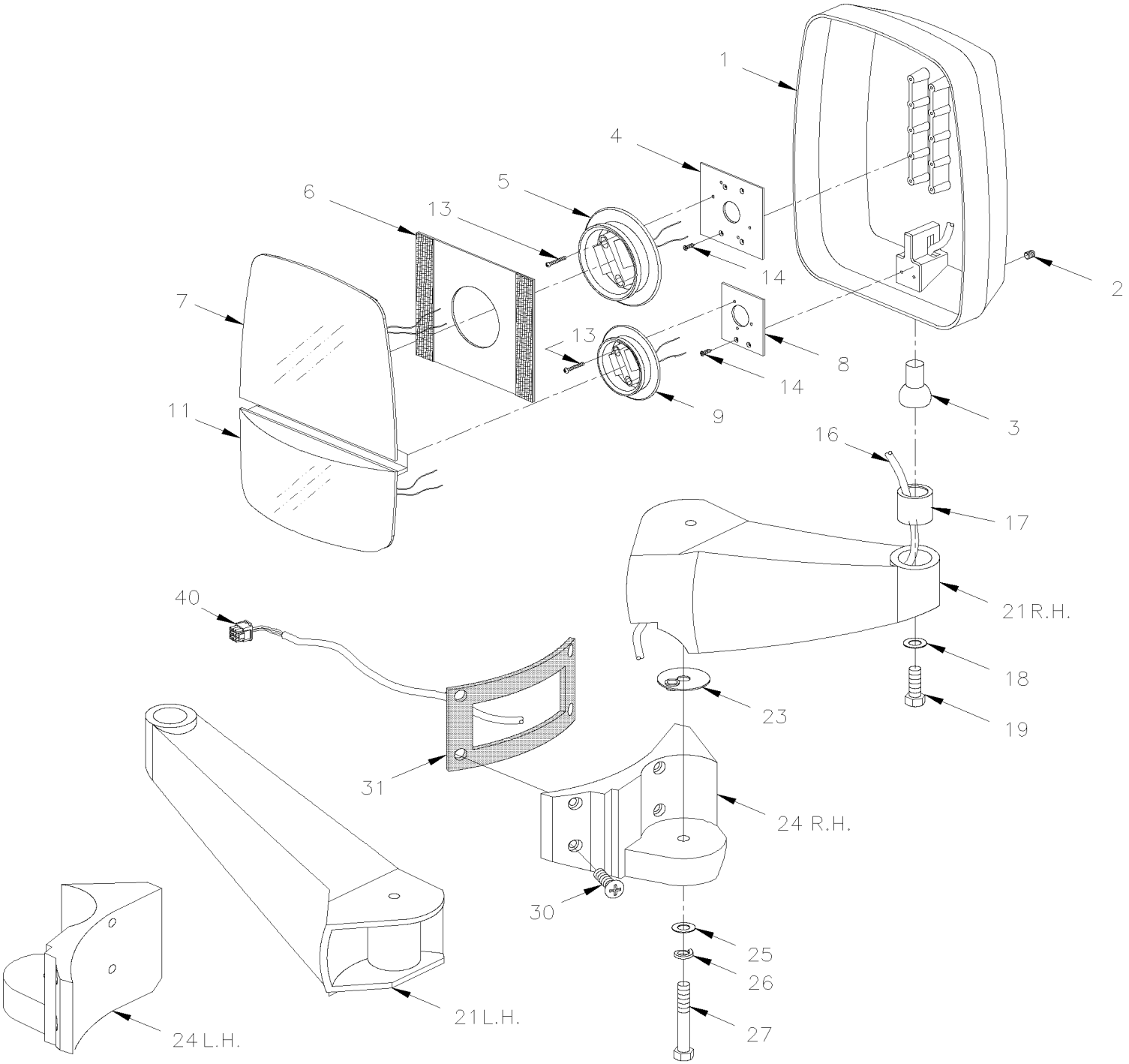

From Y-7046 To 2-7763		Date:07/2024	PAGE:Y2-1856-60

MIRROR "RAMCO" 2 GLASSES / CHROME

Item#	Part	Description	XLII 45	XLII MTH40	XLII MTH45	XLII MTH45E	NOTES
	990326	MIRROR ASSY, R.H. / ELECTRIC / W/8 PINS CONNECTOR		1	1	1	
	990325	MIRROR ASSY, L.H. / ELECTRIC / W/8 PINS CONNECTOR		1	1	1	
1	990344	. HEAD ASSY / ELECTRIC / W/8 PINS CONNECTOR		1	1	1	
2	502812	. . SCREW SET HEXS CUP 3/8-16X3/8 SS		1	1	1	
3	990186	. . STUD, BALL		1	1	1	
4	990272	. . NOTCHED BACK MOUNTING PLATE (2" X 3")		1	1	1	
5	990349	. . MOTOR 12V / MEDIUM / BLACK / 108MM / 4 1/4" O.D.		1	1	1	
. NS	564494	. . . TAB TERMINAL / 20-16 / AMP 63138-1		4	4	4	
6	990266	. . VELCRO PLATE / 6" X 7"		1	1	1	
7	990182	. . FLAT GLASS ASSY W/HEATER 12V		1	1	1	
8	990273	. . POWER CONVEX MOTOR BASE PLATE		1	1	1	
9	990219	. . MOTOR 12V / SMALL / BLACK / 85MM / 3 5/16" O.D.		1	1	1	
. NS	564494	. . . TAB TERMINAL / 20-16 / AMP 63138-1		4	4	4	
11	990338	. . CONVEX GLASS ASSY W/HEATER 12V		1	1	1	
13	N.P.N.	. . SCREW TC FL PH ZP 6-32 X 1 1/8"		3	3	3	4
14	500660	. . SCREW TC FL PH #6-32x3/8 Z050		2	2	2	
16	990377	. . CABLE ASSY / W/CONNECTOR 8PIN		1	1	1	
17	990379	. . CUP, BALL STUD RETAINER / ONE PIECE		1	1	1	
18	500270	. . WASHER FL .406x1.000x.063 SS		1	1	1	
19	N.P.N.	. . SCREW CAP HEX SS 3/8-24 X 1.250		1	1	1	4
21	990316	. ARM, R.H.		1	1	1	
21	990314	. ARM, L.H.		1	1	1	
23	990265	. WASHER ALUMINUM / 2 " O.D.		1	1	1	
NS	504082	. . SNAP BUSHING / .125x.312x.312		1	1	1	
24	990310	. BRACKET, MOUNTING R.H.		1	1	1	
24	990312	. BRACKET, MOUNTING L.H.		1	1	1	
25	500958	. WASHER FL .531x1.062x.095 SS		1	1	1	
26	500035	. WASHER LO SPT .317x.586x.078 SS		1	1	1	
27	990500	. SCREW 1/2-13x2 HHCS SS		1	1	1	
30	5001461	SCREW MA FL PH M8-1.25x40 SS		2	2	2	
30	5001581	SCREW CAP BUT HEXS M8-1.25x40 SS		2	2	2	
NS	5001341	WASHER FL 8.4x17.0x1.6 SS		2	2	2	
31	490873	GASKET, RH		1	1	1	
31	490894	GASKET, LH		1	1	1	
40	562920	CONNECTOR / SH 8C / SWITCHCRAFT EN3C8FC		1	1	1	A
NS	562919	CONNECTOR / PH 8C / SWITCHCRAFT EN3P8MC		1	1	1	A B
NS	065583	KIT, RETROFIT CONNECTOR "CONXAL" 8C		1	1	1	
. NS	IS-01082	. SEE INSTRUCTION SHEET		1	1	1	
. NS	065534	. CABLE ASSY , INTERFACE / SWITCHCRAFT & CONXAL		1	1	1	

From Y-7046 To 2-7763		Date:07/2024	PAGE:Y2-1856-60

MIRROR "RAMCO" 2 GLASSES / CHROME

Item#	Part	Description	XLII 45	XLII MTH40	XLII MTH45	XLII MTH45E	NOTES
		A) FOR PRODUCT IMPROVEMENT ASK KIT 065583					
		B) THIS CONNECTOR IT USED ON CABLE HARNESS FROM INSIDE OF VEHICULE					
		4) NO PARTS NUMBER					

From 2-7764 To 8-9339		Date:07/2024	PAGE:Y2-1856-61
MIRROR "RAMCO" 2 GLASSES / CHROME			

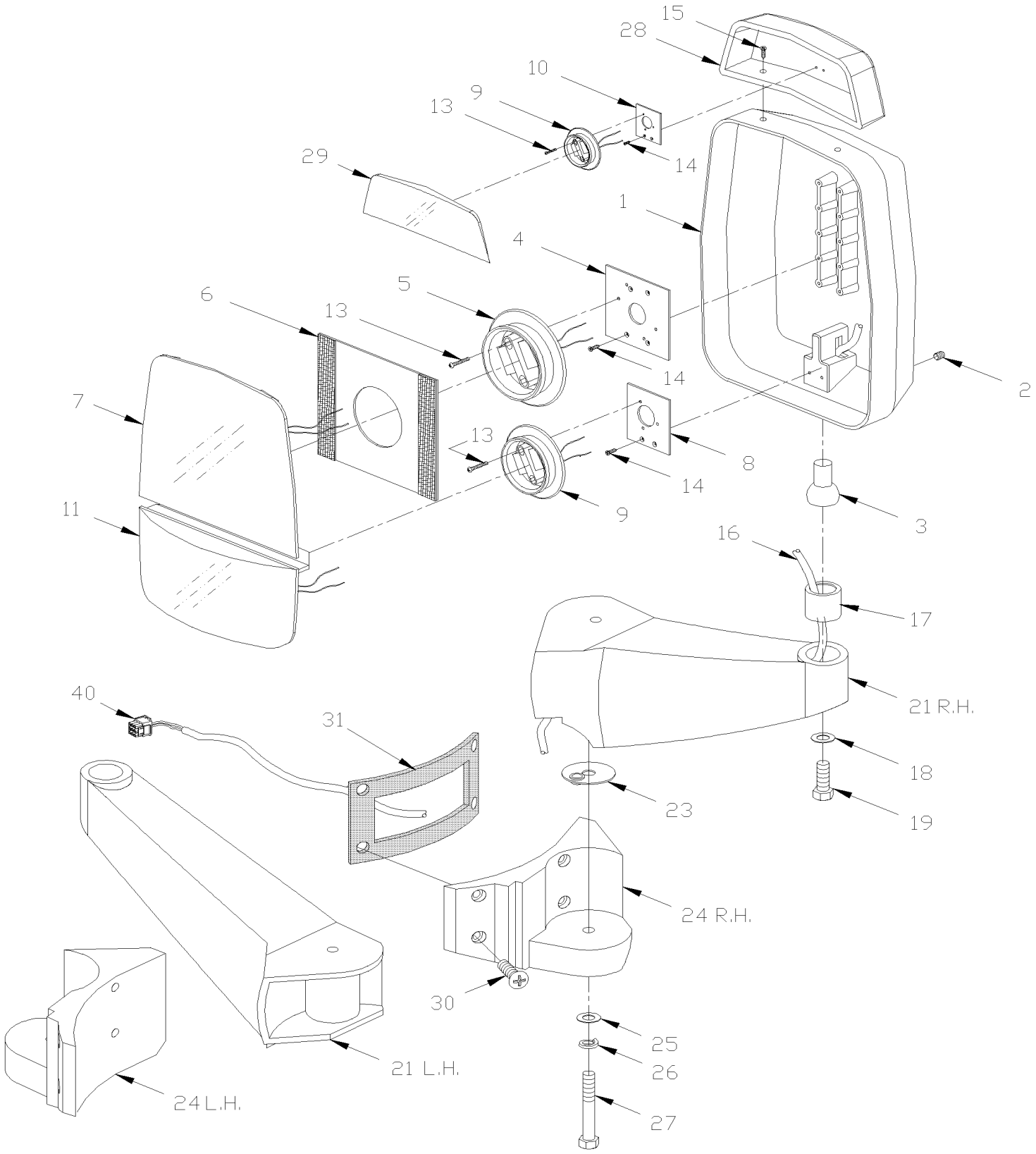

From 2-7764 To 8-9339		Date:07/2024	PAGE:Y2-1856-61

MIRROR "RAMCO" 2 GLASSES / CHROME

Item#	Part	Description	XLII 45	XLII MTH40	XLII MTH45	XLII MTH45E	NOTES
	990359	MIRROR ASSY, R.H. / ELECTRIC / W/8 PINS CONNECTOR		1	1	1	
	990390	MIRROR ASSY, R.H. / ELECTRIC W/AUXILIARY CONVEX OVER / W/8 PINS CONNECTOR		1	1	1	A
	990358	MIRROR ASSY, L.H. / ELECTRIC / W/8 PINS CONNECTOR To 3-8041		1	1	1	
	990389	MIRROR ASSY, L.H. / ELECTRIC W/AUXILIARY CONVEX OVER / W/8 PINS CONNECTOR To 3-8041		1	1	1	A
	990405	MIRROR ASSY, L.H. / ELECTRIC / W/8 PINS CONNECTOR From 3-8042		1	1	1	
	990410	MIRROR ASSY, L.H. / ELECTRIC W/AUXILIARY CONVEX OVER / W/8 PINS CONNECTOR From 3-8042		1	1	1	A
1	990372	. HEAD ASSY / ELECTRIC / W/8 PINS CONNECTOR		1	1	1	
1	990391	. HEAD ASSY / W/AUXILIARY CONVEX OVER / W/8 PINS CONNECTOR		1	1	1	A
2	502812	. . SCREW SET HEXS CUP 3/8-16X3/8 SS		1	1	1	
3	990186	. . STUD, BALL		1	1	1	
4	990272	. . NOTCHED BACK MOUNTING PLATE (2" X 3")		1	1	1	
5	990349	. . MOTOR 12V / MEDIUM / BLACK / 108MM / 4 1/4" O.D.		1	1	1	
. NS	564494	. . . TAB TERMINAL / 20-16 / AMP 63138-1		4	4	4	
6	990266	. . VELCRO PLATE / 6" X 7"		1	1	1	
7	990182	. . FLAT GLASS ASSY W/HEATER 12V		1	1	1	
8	990273	. . POWER CONVEX MOTOR BASE PLATE		1	1	1	
9	990219	. . MOTOR 12V / SMALL / BLACK / 85MM / 3 5/16" O.D.		1	1	1	
. NS	564494	. . . TAB TERMINAL / 20-16 / AMP 63138-1		4	4	4	
10	990295	. . PLATE, TOP MOTOR MOUNTING		1	1	1	A
11	990338	. . CONVEX GLASS ASSY W/HEATER 12V		1	1	1	
13	N.P.N.	. . SCREW TC FL PH ZP 6-32 X 1 1/8"		6	6	6	4
14	500660	. . SCREW TC FL PH #6-32x3/8 Z050		8	8	8	
15	990530	. . SCREW CAP HEX #10-24x1" SS		2	2	2	A
16	N.P.N.	. . CABLE ASSY / W/CONNECTOR 8PIN / SEE ITEM # 40		1	1	1	4
17	990379	. . CUP, BALL STUD RETAINER / ONE PIECE		1	1	1	
18	500270	. . WASHER FL .406x1.000x.063 SS		1	1	1	
19	N.P.N.	. . SCREW CAP HEX SS 3/8-24 X 1.250		1	1	1	4
21	990316	. ARM, R.H.		1	1	1	
21	990314	. ARM, L.H. To 3-8041		1	1	1	
21	990394	. ARM, L.H. / DIRTY FREE From 3-8042		1	1	1	
23	990265	. WASHER ALUMINUM / 2 " O.D.		1	1	1	
NS	504082	. . SNAP BUSHING / .125x.312x.312		1	1	1	
24	990310	. BRACKET, MOUNTING R.H.		1	1	1	
24	990312	. BRACKET, MOUNTING L.H.		1	1	1	
25	500958	. WASHER FL .531x1.062x.095 SS		1	1	1	
26	500035	. WASHER LO SPT .317x.586x.078 SS		1	1	1	
27	990500	. SCREW 1/2-13x2 HHCS SS		1	1	1	
28	990302	. MIRROR ASSY / CONVEX ELECTRIC		1	1	1	A
29	990339	. GLASS CONVEX ASSY W/HEATER 12V		1	1	1	A
30	5001461	SCREW MA FL PH M8-1.25x40 SS		2	2	2	
30	5001581	SCREW CAP BUT HEXS M8-1.25x40 SS		2	2	2	
NS	5001341	WASHER FL 8.4x17.0x1.6 SS		2	2	2	

From 2-7764 To 8-9339		Date:07/2024	PAGE:Y2-1856-61

MIRROR "RAMCO" 2 GLASSES / CHROME

Item#	Part	Description	XLII 45	XLII MTH40	XLII MTH45	XLII MTH45E	NOTES
31	490873	GASKET, RH		1	1	1	
31	490894	GASKET, LH		1	1	1	
40	563163	CONNECTOR / W 45" CABLE ASSY / PH 8C / CONXALL 3280-8PG-324		1	1	1	
NS	563088	CONNECTOR / MULTI CON X / SH 8C / CONXALL 4280-8SG-300		1	1	1	B
41	562511	SOCKET TERMINAL / 20 / CONXALL 586SG		AR	AR	AR	B
		A) WITH ELECTRIC CONVEX OVER					
		B) THIS CONNECTOR IT USED ON CABLE HARNESS FROM INSIDE OF VEHICULE					
		4) NO PARTS NUMBER					

From Y-7046 To 6-8906		Date:07/2024	PAGE:Y2-1857-00
FENDERS L.H. - BUS W/FLAT PANELING			

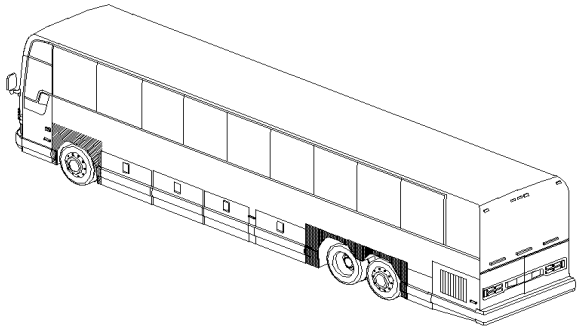

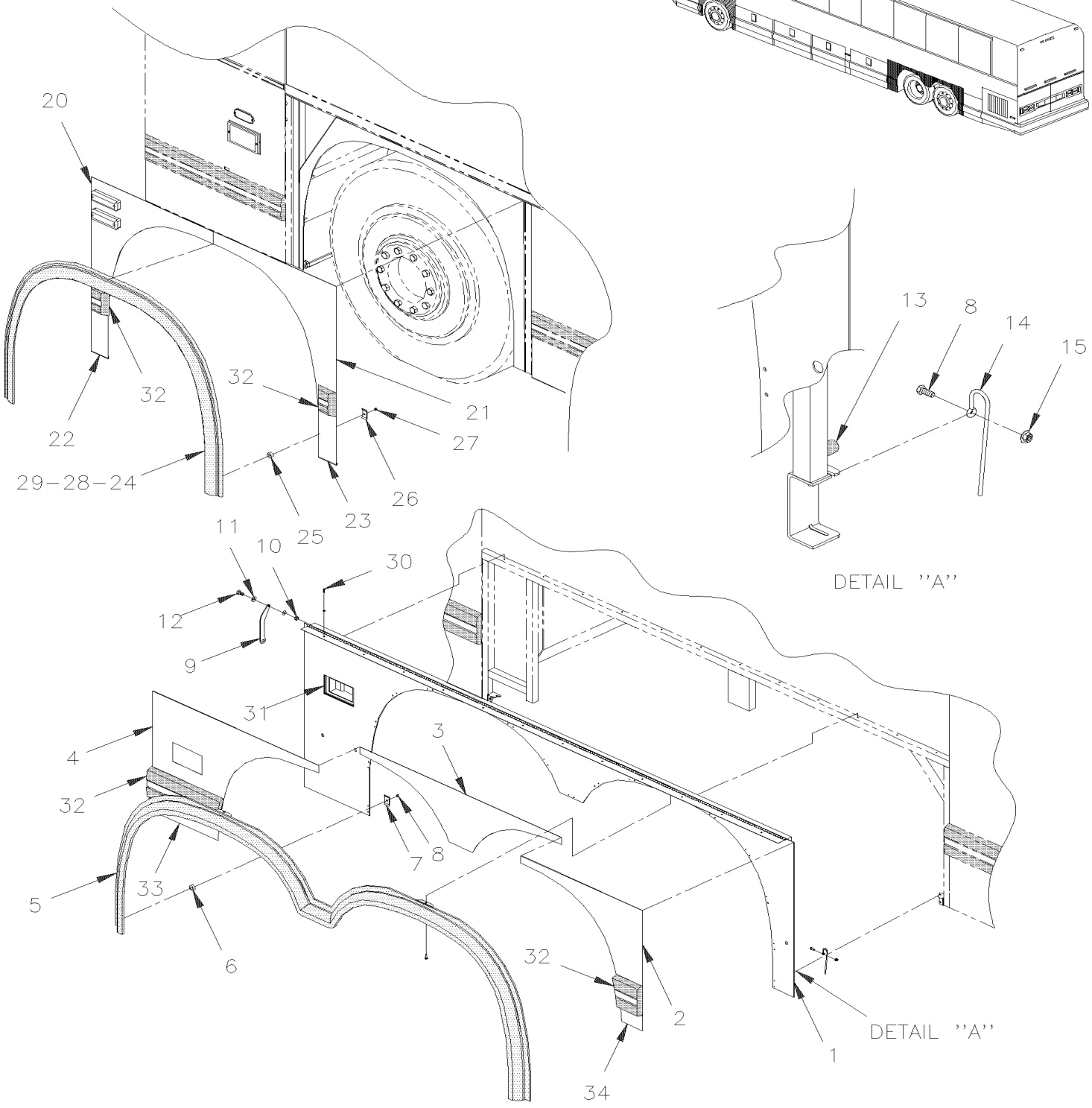

From Y-7046 To 6-8906		Date:07/2024	PAGE:Y2-1857-00

FENDERS L.H. - BUS W/FLAT PANELING

Item#	Part	Description	XLII 45	XLII MTH40	XLII MTH45	XLII MTH45E	NOTES
	474340	REAR FENDER ASSY L.H. W/EDGE To 1-7688	1				
	475159	REAR FENDER ASSY L.H. W/EDGE From 1-7689	1				
1	213920	. FRAME REAR FENDER L.H.	1				
2	474219	. PANEL L.H. & R.H. BACKWARD	1				
3	474221	. PANEL CENTER	1				
4	474220	. PANEL L.H. & R.H. FORWARD	1				
4	477927	. PANEL L.H. & R.H. FORWARD / W/DOCKING LIGHTS	1				
5	240455	. EDGE MOULDING LH W/FLAT PANEL To 1-7688	1				
5	240494	. EDGE MOULDING LH W/FLAT PANEL From 1-7689	1				
5	500658	. SCREW TC PAN PH #10-24x3/4 Z050	2				
6	571755	. SPACERS BUTTITE STAINLESS	1				
7	240436	. MOUNTING PLATE EDGE 43.2MM x 25MM	1				
8	502622	. SCREW CAP HEX M6-1.0x20 SS BK	2				
9	240412	. LEVER / FOR LOCK	1				
NS	502803	. PIN HITCH CLIP 3/32 x 2 1/2 SS	1				
10	500868	. NUT HEX NYRT M8-1.25 Z050	1				
NS	502543	. NUT HEX M8-1.25 Z050	1				
11	471119	. SEAL WASHER / RUB RAIL & PANEL	1				
11	500874	. WASHER FL 8.4x17.0x1.6 Z050	1				
12	502589	. SCREW CAP HEX M8-1.25x25 G8.8 Z050	1				
13	504527	. BUMPER PLUG / .625ODx.312THx.250HOLEx.125	4				
14	472830	. SPRING GUIDE HOLDER	2				
15	5001182	. NUT HEX NYRT M6-1.0 SS	2				
NS	681092	. ADHESIVE SIKA #255FC / BLACK / 310ml CARTRIDGE	AR				
NS	683097	. CLEANER SIKA #205 / CLEAR / 1000ml	AR				
NS	683446	. PRIMER SIKA #206 / BLACK / 1000ml	AR				
NS	506790	. TAPE RUB ADH2 CC POL 1/16" x 1/2" x 200' / BLACK I1C-N-A	AR				
20	474607	PANEL FRONT L.H. FORWARD To 3-8164	1				
20	473738	PANEL FRONT L.H. FORWARD From 4-8165 To 5-8358	1				
20	476360	PANEL FRONT L.H. FORWARD From 5-8359	1				
21	474222	PANEL UPPER LH & RH BACKWARD To 3-8164	1				
21	473718	PANEL UPPER LH & RH BACKWARD From 4-8165	1				
22	474004	PANEL LOWER / 95MM X 243MM / S.B.	1				
23	474006	PANEL LOWER / 103MM X 255MM / S.B.	1				
24	240454	EDGE MOULDING W/FLAT PANEL To 1-7688	1				
24	240493	EDGE MOULDING W/FLAT PANEL From 1-7689 To 4-8193	1				
24	240623	EDGE MOULDING W/FLAT PANEL From 4-8194	1				
25	571755	SPACERS BUTTITE STAINLESS	22				
26	240436	MOUNTING PLATE EDGE 43.2MM x 25MM	27				
27	5001182	NUT HEX NYRT M6-1.0 SS	22				
28	460430	MOULDING RUBBER / 2540MM	1				A
29	460431	FENDER RUBBER FRONT / L.H. & R.H. / (ORLEAN OPTION)	1				A

From Y-7046 To 6-8906		Date:07/2024	PAGE:Y2-1857-00

FENDERS L.H. - BUS W/FLAT PANELING

Item#	Part	Description	XLII 45	XLII MTH40	XLII MTH45	XLII MTH45E	NOTES
NS	5001182	NUT HEX NYRT M6-1.0 SS	22				A
NS	240436	MOUNTING PLATE EDGE 43.2MM x 25MM	22				A
30	504488	RIVET MGLP PRDG 3/16x17/64 SS	14				
31	**Y2-0663-00**	**DOCK & CORNERING LIGHT**					
32	**Y2-1855-00**	**RUB RAIL - EXTERIOR CREST & TRIMS**					
33	474003	PANEL LOWER / 394MM X 255MM / S.B.	1				
34	473995	PANEL LOWER / 127MM X 205MM / S.B.	1				
		A) "OPTION" WITH XL 102" RUBBER FENDER					

From Y-7046 To 6-8906		Date:07/2024	PAGE:Y2-1857-05
FENDERS R.H. - BUS W/FLAT PANELING			

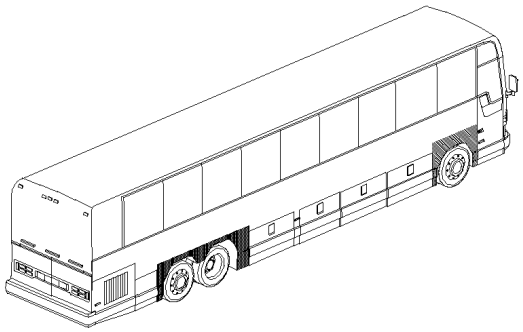

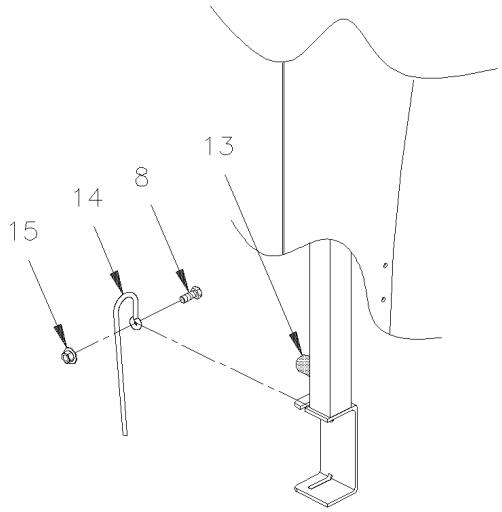

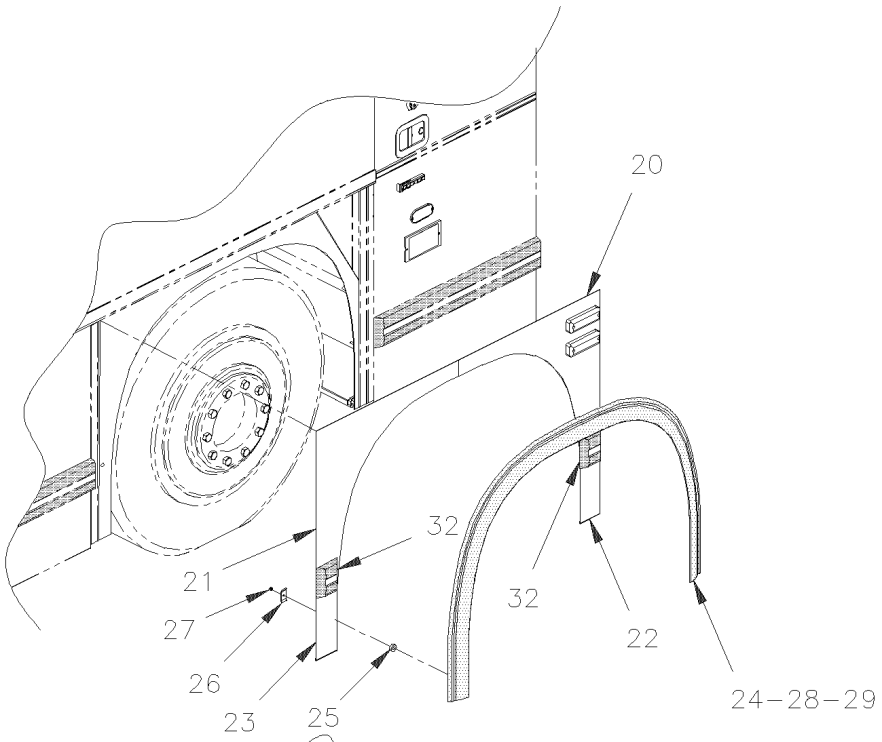

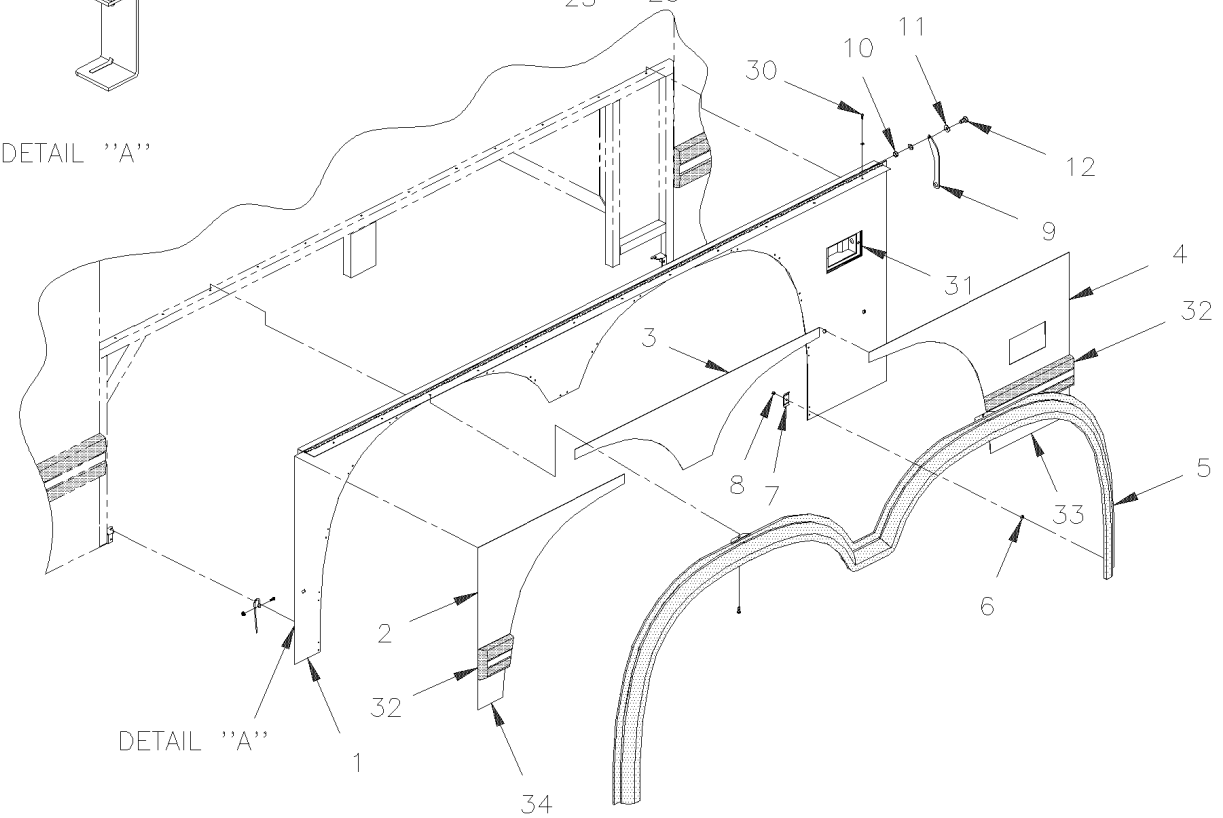

From Y-7046 To 6-8906		Date:07/2024	PAGE:Y2-1857-05

FENDERS R.H. - BUS W/FLAT PANELING

Item#	Part	Description	XLII 45	XLII MTH40	XLII MTH45	XLII MTH45E	NOTES
	474339	REAR FENDER ASSY R.H. W/EDGE To 1-7688	1				
	475160	REAR FENDER ASSY R.H. W/EDGE From 1-7689	1				
1	213940	. FRAME REAR FENDER R.H.	1				
2	474219	. PANEL L.H. & R.H. BACKWARD	1				
3	474221	. PANEL CENTER	1				
4	474220	. PANEL L.H. & R.H. FORWARD	1				
4	477927	. PANEL L.H. & R.H. FORWARD / W/DOCKING LIGHTS	1				
5	240456	. EDGE MOULDING RH W/FLAT PANEL To 1-7688	1				
5	240495	. EDGE MOULDING RH W/FLAT PANEL From 1-7689	1				
NS	500658	. SCREW TC PAN PH #10-24x3/4 Z050	2				
6	571755	. SPACERS BUTTITE STAINLESS	1				
7	240436	. MOUNTING PLATE EDGE 43.2MM x 25MM	1				
8	502622	. SCREW CAP HEX M6-1.0x20 SS BK	2				
9	240412	. LEVER / FOR LOCK	1				
NS	502803	. PIN HITCH CLIP 3/32 x 2 1/2 SS	1				
10	500868	. NUT HEX NYRT M8-1.25 Z050	1				
NS	502543	. NUT HEX M8-1.25 Z050	1				
11	471119	. SEAL WASHER / RUB RAIL & PANEL	1				
NS	500874	. WASHER FL 8.4x17.0x1.6 Z050	1				
12	502589	. SCREW CAP HEX M8-1.25x25 G8.8 Z050	1				
13	504527	. BUMPER PLUG / .625ODx.312THx.250HOLEx.125	4				
14	472830	. SPRING GUIDE HOLDER	2				
15	5001182	. NUT HEX NYRT M6-1.0 SS	2				
NS	681092	. ADHESIVE SIKA #255FC / BLACK / 310ml CARTRIDGE	AR				
NS	683097	. CLEANER SIKA #205 / CLEAR / 1000ml	AR				
NS	683446	. PRIMER SIKA #206 / BLACK / 1000ml	AR				
NS	506790	. TAPE RUB ADH2 CC POL 1/16" x 1/2" x 200' / BLACK I1C-N-A	AR				
20	474608	PANEL FRONT R.H. FORWARD To 3-8164	1				
20	473719	PANEL FRONT R.H. FORWARD From 4-8165 To 5-8358	1				
20	476359	PANEL FRONT R.H. FORWARD From 5-8359	1				
21	474222	PANEL UPPER LH & RH BACKWARD To 3-8164	1				
21	473718	PANEL UPPER LH & RH BACKWARD From 4-8165	1				
22	474004	PANEL LOWER / 95MM X 243MM / S.B.	1				
23	474006	PANEL LOWER / 103MM X 255MM / S.B.	1				
24	240454	EDGE MOULDING W/FLAT PANEL To 1-7688	1				
24	240493	EDGE MOULDING W/FLAT PANEL From 1-7689 To 4-8193	1				
24	240623	EDGE MOULDING W/FLAT PANEL From 4-8194	1				
25	571755	SPACERS BUTTITE STAINLESS	22				
26	240436	MOUNTING PLATE EDGE 43.2MM x 25MM	22				
27	5001182	NUT HEX NYRT M6-1.0 SS	22				
28	460430	MOULDING RUBBER / 2540MM	1				A
29	460431	FENDER RUBBER FRONT / L.H. & R.H. / (ORLEAN OPTION)	1				A

From Y-7046 To 6-8906		Date:07/2024	PAGE:Y2-1857-05

FENDERS R.H. - BUS W/FLAT PANELING

Item#	Part	Description	XLII 45	XLII MTH40	XLII MTH45	XLII MTH45E	NOTES
29	5001182	NUT HEX NYRT M6-1.0 SS	22				A
29	240436	MOUNTING PLATE EDGE 43.2MM x 25MM	22				A
30	504488	RIVET MGLP PRDG 3/16x17/64 SS	14				
31	**Y2-0663-00**	**DOCK & CORNERING LIGHT**					
32	**Y2-1855-00**	**RUB RAIL - EXTERIOR CREST & TRIMS**					
33	474003	PANEL LOWER / 394MM X 255MM / S.B.	1				
34	473995	PANEL LOWER / 127MM X 205MM / S.B.	1				
		A) "OPTION" WITH XL 102" RUBBER FENDER					

From Y-7046 To 6-8906		Date:07/2024	PAGE:Y2-1857-10
FENDERS L.H. - BUS W/FLUTED PANELLING			

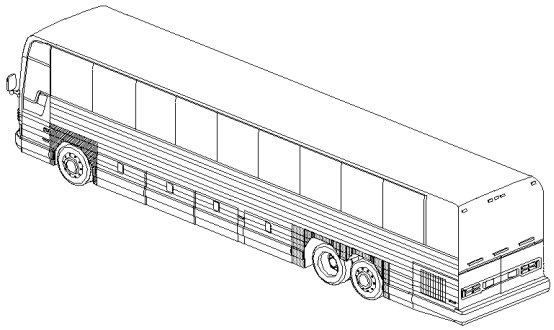

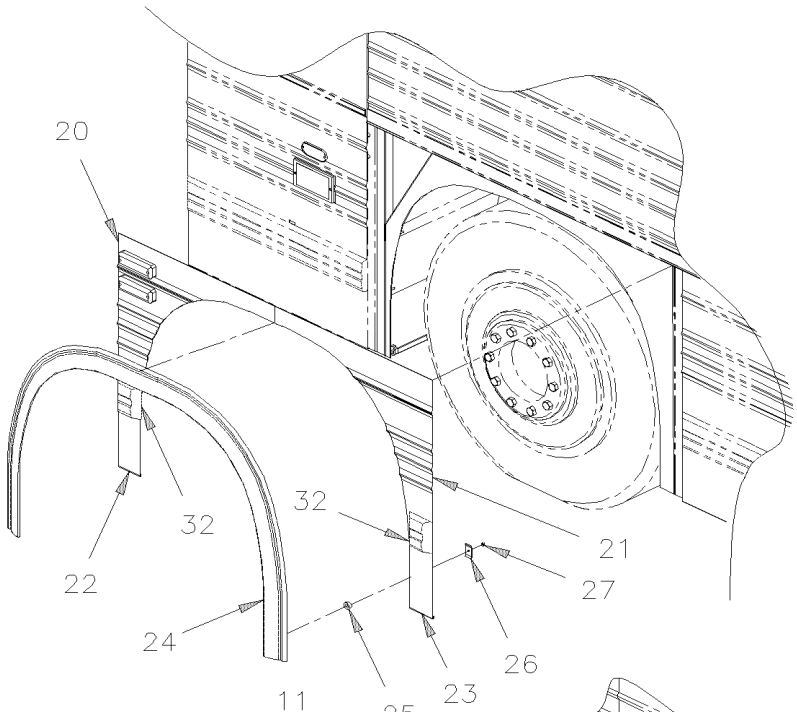

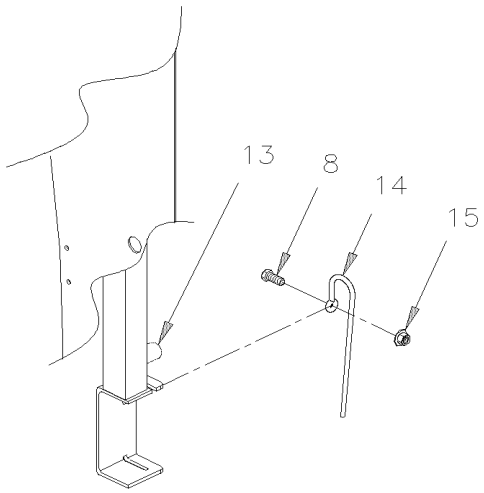

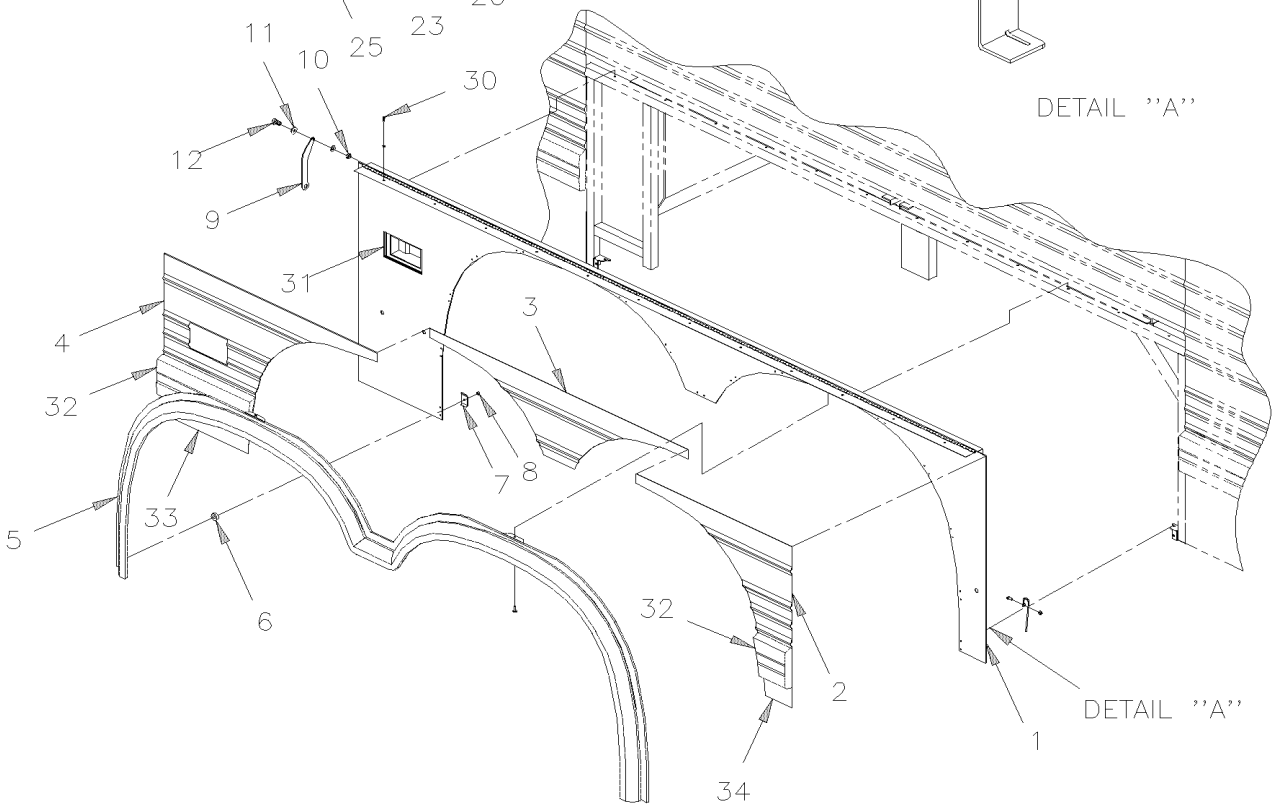

From Y-7046 To 6-8906		Date:07/2024	PAGE:Y2-1857-10

FENDERS L.H. - BUS W/FLUTED PANELLING

Item#	Part	Description	XLII 45	XLII MTH40	XLII MTH45	XLII MTH45E	NOTES
	474497	REAR FENDER ASSY L.H. W/EDGE / S.B.	1				A
	474906	REAR FENDER ASSY L.H. W/EDGE / S.B.	1				B
	474110	. REAR FENDER ASSY L.H. W/OUT EDGE / S.B.	1				
1	213920	. . FRAME REAR FENDER L.H.	1				
2	474350	. . PANEL REAR L.H. BACKWARD / S.B.	1				A
3	474354	. . PANEL CENTER / S.B.	1				A
4	474352	. . PANEL REAR L.H. FORWARD	1				A
4	474909	. . PANEL REAR L.H. FORWARD	1				B
5	240482	. . EDGE MOULDING LH W/FLUTED PANEL	1				
NS	500658	. . SCREW TC PAN PH #10-24x3/4 Z050	2				
6	571755	. . SPACERS BUTTITE STAINLESS	15				
7	240436	. . MOUNTING PLATE EDGE 43.2MM x 25MM	15				
8	502622	. . SCREW CAP HEX M6-1.0x20 SS BK	2				
9	240412	. . LEVER / FOR LOCK	1				
NS	502803	. . PIN HITCH CLIP 3/32 x 2 1/2 SS	1				
10	500868	. . NUT HEX NYRT M8-1.25 Z050	1				
10	502543	. . NUT HEX M8-1.25 Z050	1				
11	471119	. . SEAL WASHER / RUB RAIL & PANEL	1				
11	500874	. . WASHER FL 8.4x17.0x1.6 Z050	1				
12	502589	. . SCREW CAP HEX M8-1.25x25 G8.8 Z050	1				
13	504527	. . BUMPER PLUG / .625ODx.312THx.250HOLEx.125	4				
14	472830	. . SPRING GUIDE HOLDER	2				
15	5001182	. . NUT HEX NYRT M6-1.0 SS	17				
NS	506790	. . TAPE RUB ADH2 CC POL 1/16" x 1/2" x 200' / BLACK I1C-N-A	AR				
20	474857	PANEL FRONT L.H. FORWARD / S.B. To 5-8358	1				
20	477616	PANEL FRONT L.H. FORWARD / S.B. From 5-8359	1				
21	474355	PANEL FRONT L.H. BACKWARD / S.B. To 3-8164	1				A
21	473650	PANEL FRONT L.H. BACKWARD / S.B. From 4-8165	1				A
22	474004	PANEL LOWER / 95MM X 243MM / S.B.	1				A
23	474006	PANEL LOWER / 103MM X 255MM / S.B.	1				A
24	240481	EDGE MOULDING W/FLUTED PANEL To 4-8193	1				
24	240528	EDGE MOULDING W/FLUTED PANEL From 4-8195	1				
25	571755	SPACERS BUTTITE STAINLESS	22				
26	240436	MOUNTING PLATE EDGE 43.2MM x 25MM	22				
27	5001182	NUT HEX NYRT M6-1.0 SS	22				
30	504488	RIVET MGLP PRDG 3/16x17/64 SS	14				
31	**Y2-0663-00**	**DOCK & CORNERING LIGHT**					
32	**Y2-1855-00**	**RUB RAIL - EXTERIOR CREST & TRIMS**					
33	474003	PANEL LOWER / 394MM X 255MM / S.B.	2				A
34	473995	PANEL LOWER / 127MM X 205MM / S.B.	2				A

From Y-7046 To 6-8906		Date:07/2024	PAGE:Y2-1857-10

FENDERS L.H. - BUS W/FLUTED PANELLING

Item#	Part	Description	XLII 45	XLII MTH40	XLII MTH45	XLII MTH45E	NOTES
		A) WITH DOCKING LIGHT					
		B) W/OUT DOCKING LIGHT					

From Y-7046 To 8-9339		Date:07/2024	PAGE:Y2-1857-15
FENDERS R.H. - BUS W/FLUTED PANELLING			

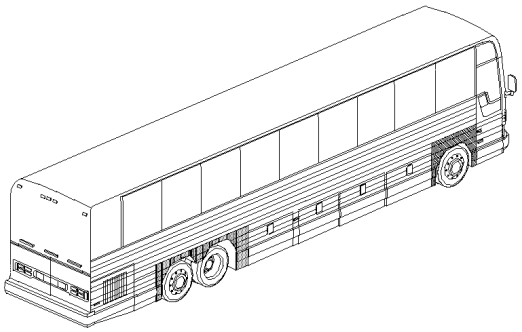

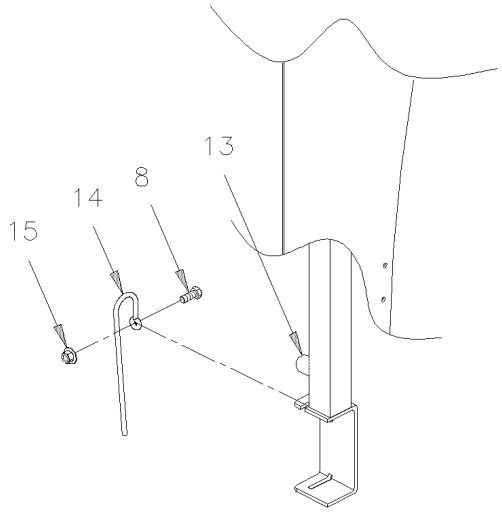

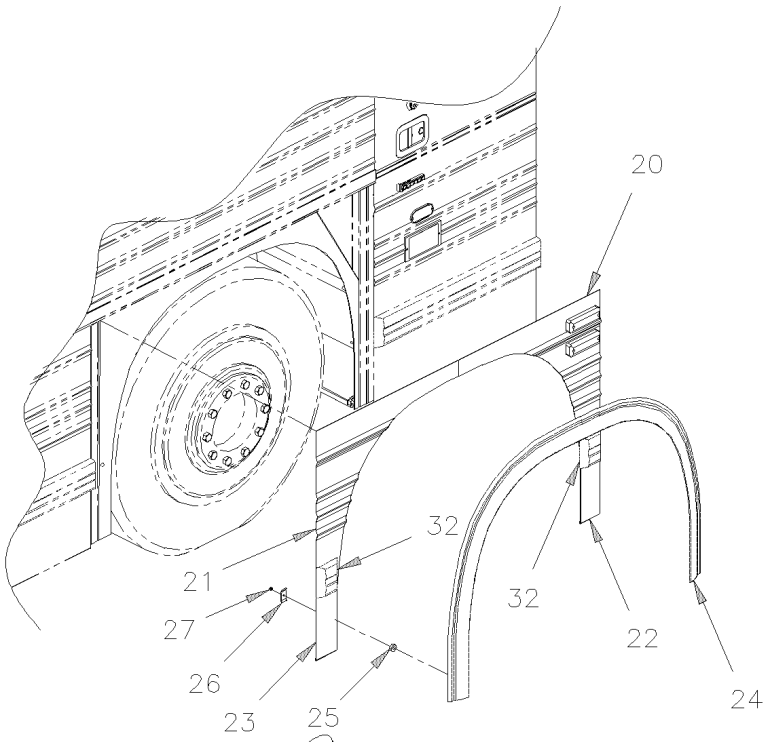

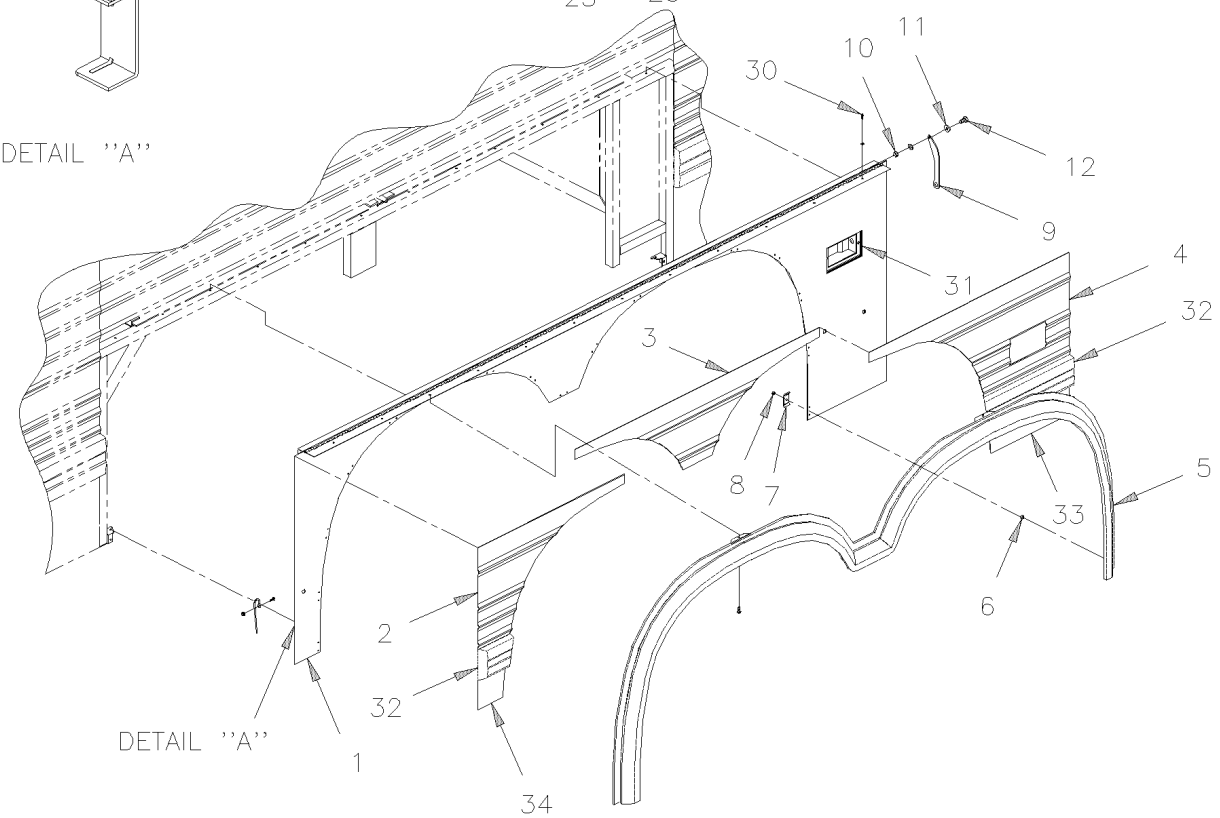

From Y-7046 To 8-9339		Date:07/2024	PAGE:Y2-1857-15

FENDERS R.H. - BUS W/FLUTED PANELLING

Item#	Part	Description	XLII 45	XLII MTH40	XLII MTH45	XLII MTH45E	NOTES
	474498	REAR FENDER ASSY R.H. W/EDGE / S.B.	1				A
	474905	REAR FENDER ASSY R.H. W/EDGE / S.B.	1				B
	474111	. REAR FENDER ASSY R.H. W/OUT EDGE / S.B.	1				
1	213940	. . FRAME REAR FENDER R.H.	1				
2	474351	. . PANEL REAR R.H BACKWARD	1				A
3	474354	. . PANEL CENTER / S.B.	1				A
4	474353	. . PANEL REAR R.H. FORWARD	1				A
4	474908	. . PANEL REAR R.H. FORWARD	1				B
5	240483	. . EDGE MOULDING RH W/FLUTED PANEL	1				
6	571755	. . SPACERS BUTTITE STAINLESS	15				
7	240436	. . MOUNTING PLATE EDGE 43.2MM x 25MM	15				
8	502622	. . SCREW CAP HEX M6-1.0x20 SS BK	2				
9	240412	. . LEVER / FOR LOCK	1				
9	502803	. . PIN HITCH CLIP 3/32 x 2 1/2 SS	1				
10	500868	. . NUT HEX NYRT M8-1.25 Z050	1				
10	502543	. . NUT HEX M8-1.25 Z050	1				
11	471119	. . SEAL WASHER / RUB RAIL & PANEL	1				
11	500874	. . WASHER FL 8.4x17.0x1.6 Z050	1				
12	502589	. . SCREW CAP HEX M8-1.25x25 G8.8 Z050	1				
13	504527	. . BUMPER PLUG / .625ODx.312THx.250HOLEx.125	4				
14	472830	. . SPRING GUIDE HOLDER	2				
15	5001182	. . NUT HEX NYRT M6-1.0 SS	17				
NS	506790	. . TAPE RUB ADH2 CC POL 1/16" x 1/2" x 200' / BLACK I1C-N-A	AR				
20	474858	PANEL FRONT R.H. FORWARD / S.B. To 5-8358	1				A
20	477615	PANEL FRONT R.H. FORWARD / S.B. From 5-8359	1				
21	474356	PANEL FRONT R.H. BACKWARD / S.B. To 3-8164	1				A
21	474232	PANEL FRONT R.H. BACKWARD / S.B. From 4-8165 To 5-8461	1				A
22	474004	PANEL LOWER / 95MM X 243MM / S.B. To 5-8468	1				
23	474006	PANEL LOWER / 103MM X 255MM / S.B. To 5-8468	1				
24	240481	EDGE MOULDING W/FLUTED PANEL To 4-8193	1				
24	240528	EDGE MOULDING W/FLUTED PANEL From 4-8194	1				
25	571755	SPACERS BUTTITE STAINLESS	22				
26	240436	MOUNTING PLATE EDGE 43.2MM x 25MM	22				
27	474003	PANEL LOWER / 394MM X 255MM / S.B. To 5-8468	2				A
27	477563	PANEL LOWER / 394MM X 255MM / B.A. From 5-8469	2				A
30	504488	RIVET MGLP PRDG 3/16x17/64 SS	14				
31	**Y2-0663-00**	**DOCK & CORNERING LIGHT**					
32	**Y2-1855-00**	**RUB RAIL - EXTERIOR CREST & TRIMS**					
33	474003	PANEL LOWER / 394MM X 255MM / S.B.	1				A
34	473995	PANEL LOWER / 127MM X 205MM / S.B.	1				A

From Y-7046 To 8-9339		Date:07/2024	PAGE:Y2-1857-15

FENDERS R.H. - BUS W/FLUTED PANELLING

Item#	Part	Description	XLII 45	XLII MTH40	XLII MTH45	XLII MTH45E	NOTES
		A) WITH DOCKING LIGHT					
		B) W/OUT DOCKING LIGHT					

From Y-7046 To 8-9339		Date:07/2024	PAGE:Y2-1857-50
FENDERS L.H. - MTH			

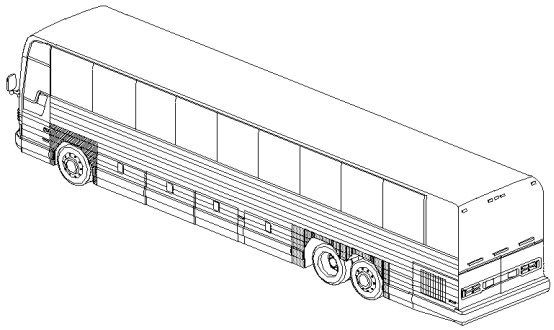

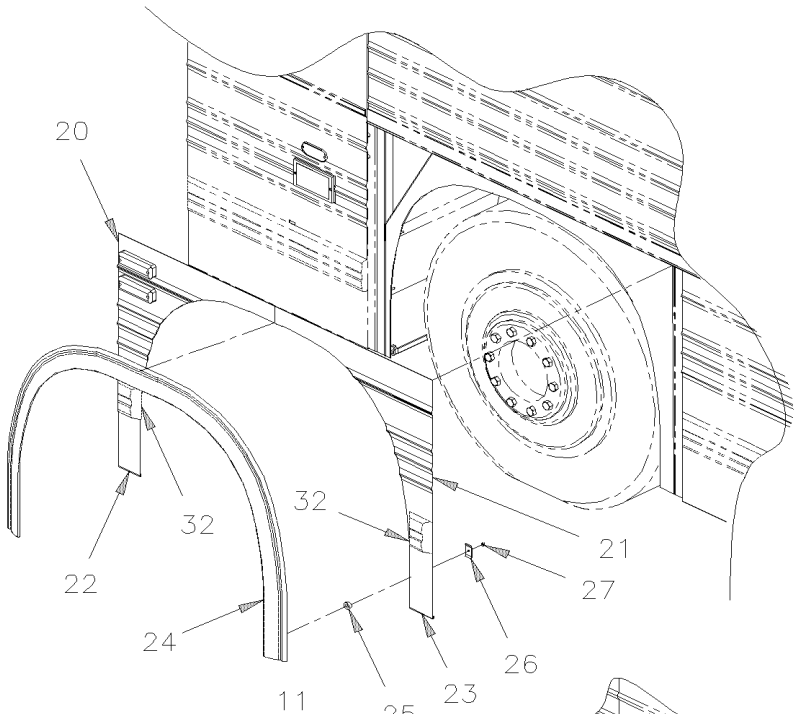

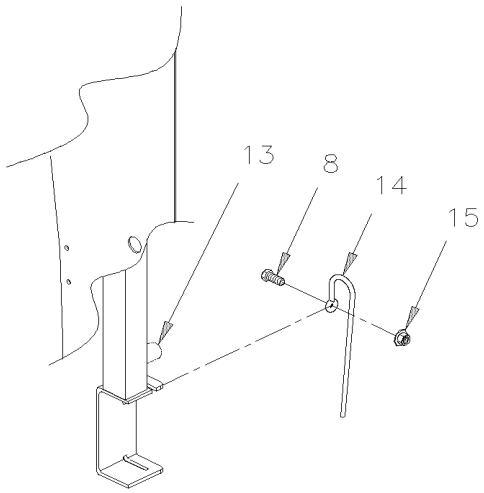

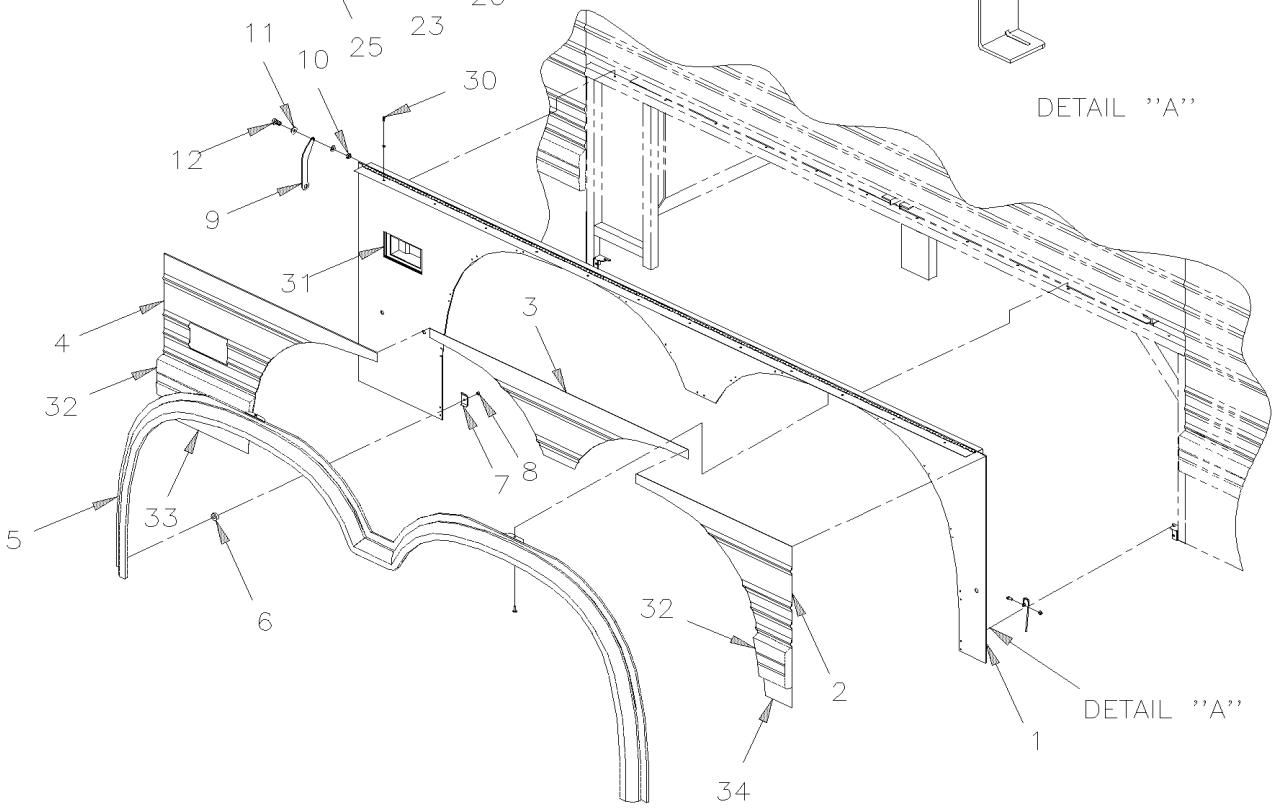

From Y-7046 To 8-9339		Date:07/2024	PAGE:Y2-1857-50

FENDERS L.H. - MTH

Item#	Part	Description	XLII 45	XLII MTH40	XLII MTH45	XLII MTH45E	NOTES
		"WARNING" - "WARNING" -"WARNING" - "WARNING"					
		FOR MTH-45 ENT FROM 7-9096					
		SEE NEXT PAGE Y2-1857-51					
	474497	REAR FENDER ASSY L.H. W/EDGE / S.B. To Y-7379		1	1	1	
	474955	REAR FENDER ASSY L.H. W/EDGE / S.B. From Y-7380		1	1	1	
	474110	. REAR FENDER ASSY L.H. W/OUT EDGE / S.B. To 5-8468		1	1	1	
	477626	. REAR FENDER ASSY L.H. W/OUT EDGE / B.A. From 5-8469		1	1	1	
1	213920	. . FRAME REAR FENDER L.H.		1	1	1	
2	474350	. . PANEL REAR L.H. BACKWARD / S.B. To 5-8468		1	1	1	
2	477560	. . PANEL REAR L.H. BACKWARD / B.A. From 5-8469		1	1	1	
3	474354	. . PANEL CENTER / S.B. To 5-8468		1	1	1	
3	477562	. . PANEL CENTER / B.A. From 5-8469		1	1	1	
4	474352	. . PANEL REAR L.H. FORWARD To 5-8468		1	1	1	
4	477561	. . PANEL REAR L.H. FORWARD / B.A. From 5-8469		1	1	1	
5	240418	. . EDGE MOULDING LH W/FLUTED & SS RAIL RECESS		1	1	1	
5	240482	. . EDGE MOULDING LH W/FLUTED PANEL		1	1	1	
NS	500658	. . SCREW TC PAN PH #10-24x3/4 Z050		2	2	2	
6	571755	. . SPACERS BUTTITE STAINLESS		15	15	15	
7	240436	. . MOUNTING PLATE EDGE 43.2MM x 25MM		15	15	15	
8	502622	. . SCREW CAP HEX M6-1.0x20 SS BK		2	2	2	
9	240412	. . LEVER / FOR LOCK		1	1	1	
NS	502803	. . PIN HITCH CLIP 3/32 x 2 1/2 SS		1	1	1	
10	500868	. . NUT HEX NYRT M8-1.25 Z050		1	1	1	
10	502543	. . NUT HEX M8-1.25 Z050		1	1	1	
11	471119	. . SEAL WASHER / RUB RAIL & PANEL		1	1	1	
11	500874	. . WASHER FL 8.4x17.0x1.6 Z050		1	1	1	
12	502589	. . SCREW CAP HEX M8-1.25x25 G8.8 Z050		1	1	1	
13	504527	. . BUMPER PLUG / .625ODx.312THx.250HOLEx.125		4	4	4	
14	472830	. . SPRING GUIDE HOLDER		2	2	2	
15	5001182	. . NUT HEX NYRT M6-1.0 SS		17	17	17	
NS	681092	. . ADHESIVE SIKA #255FC / BLACK / 310ml CARTRIDGE		AR	AR	AR	
NS	683097	. . CLEANER SIKA #205 / CLEAR / 1000ml		AR	AR	AR	
NS	683446	. . PRIMER SIKA #206 / BLACK / 1000ml		AR	AR	AR	
NS	506790	. . TAPE RUB ADH2 CC POL 1/16" x 1/2" x 200' / BLACK I1C-N-A		AR	AR	AR	
20	474609	PANEL FRONT L.H. FORWARD / S.B. To 3-8164		1	1	1	
20	473507	PANEL FRONT L.H. FORWARD / S.B. From 4-8165 To 5-8358		1	1	1	
20	476356	PANEL FRONT L.H. FORWARD / S.B. From 5-8359 To 5-8468		1	1	1	
20	477634	PANEL FRONT L.H. FORWARD / B.A. From 5-8469		1	1	1	
21	474355	PANEL FRONT L.H. BACKWARD / S.B. To 3-8164		1	1		
21	473650	PANEL FRONT L.H. BACKWARD / S.B. From 4-8165 To 5-8468		1	1		

From Y-7046 To 8-9339		Date:07/2024	PAGE:Y2-1857-50

FENDERS L.H. - MTH

Item#	Part	Description	XLII 45	XLII MTH40	XLII MTH45	XLII MTH45E	NOTES
21	477639	PANEL FRONT L.H. BACKWARD / B.A. From 5-8469		1	1		
21	474360	PANEL FRONT L.H. BACKWARD / S.B. To 3-8164				1	
21	473739	PANEL FRONT L.H. BACKWARD / S.B. From 4-8165 To 5-8468				1	
21	477633	PANEL FRONT L.H. BACKWARD / B.A. From 5-8469				1	
22	474004	PANEL LOWER / 95MM X 243MM / S.B. To 5-8468		1	1	1	
22	477637	PANEL LOWER / 95MM X 243MM / B.A. From 5-8469		1	1	1	
23	474006	PANEL LOWER / 103MM X 255MM / S.B. To 5-8468		1	1		
23	477537	PANEL LOWER / 103MM X 255MM / B.A. From 5-8469		1	1		
23	474262	PANEL LOWER / 217MM X 255MM / S.B. To 5-8468				1	
23	477638	PANEL LOWER / 217MM X 255MM / B.A. From 5-8469				1	
24	240415	EDGE MOULDING W/FLUTED & SS RAIL RECESS		1	1	1	
24	240481	EDGE MOULDING W/FLUTED PANEL To 4-8193		1	1	1	
24	240528	EDGE MOULDING W/FLUTED PANEL From 4-8194		1	1	1	
25	571755	SPACERS BUTTITE STAINLESS		22	22	22	
26	240436	MOUNTING PLATE EDGE 43.2MM x 25MM		22	22	22	
27	5001182	NUT HEX NYRT M6-1.0 SS		22	22	22	
30	504488	RIVET MGLP PRDG 3/16x17/64 SS		14	14	14	
31	**Y2-0663-00**	**DOCK & CORNERING LIGHT**					
32	**Y2-1855-00**	**RUB RAIL - EXTERIOR CREST & TRIMS**					
33	474003	PANEL LOWER / 394MM X 255MM / S.B. To 5-8468		2	2	2	
33	477563	PANEL LOWER / 394MM X 255MM / B.A. From 5-8469		2	2	2	
34	473995	PANEL LOWER / 127MM X 205MM / S.B. To 5-8468		2	2	2	
34	477632	PANEL LOWER / 127MM X 205MM / B.A. From 5-8469		2	2	2	

From 7-9096 To 8-9278		Date:07/2024	PAGE:Y2-1857-51
FENDERS L.H. - MTH 45 ENT			

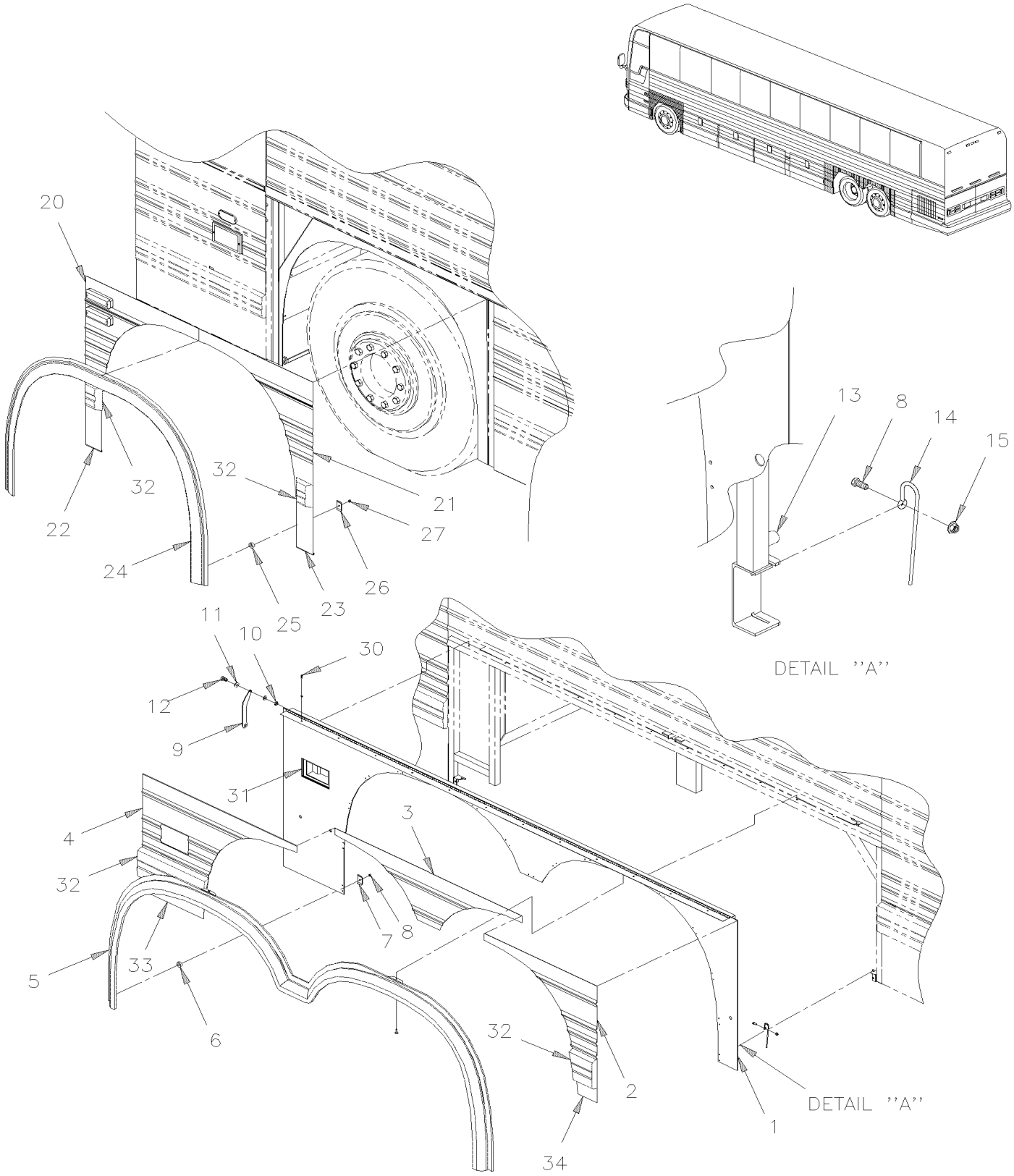

From 7-9096 To 8-9278		Date:07/2024	PAGE:Y2-1857-51

FENDERS L.H. - MTH 45 ENT

Item#	Part	Description	XLII 45	XLII MTH40	XLII MTH45	XLII MTH45E	NOTES
	460504	REAR FENDER ASSY L.H. W/EDGE / B.A. To 8-9276				1	
	460518	REAR FENDER ASSY L.H. W/EDGE / B.A. From 8-9279				1	
	460513	. REAR FENDER ASSY L.H. W/OUT EDGE / B.A. To 8-9276				1	
	460519	. REAR FENDER ASSY L.H. W/OUT EDGE / B.A. From 8-9279				1	
1	460502	. . FRAME REAR FENDER L.H. To 8-9276				1	
1	460517	. . FRAME REAR FENDER L.H. From 8-9279				1	
2	476714	. . PANEL REAR L.H. BACKWARD / B.A. To 8-9276				1	
2	476736	. . PANEL REAR L.H. BACKWARD / B.A. From 8-9279				1	
3	477562	. . PANEL CENTER / B.A.				1	
4	476716	. . PANEL REAR L.H. FORWARD / B.A.				1	
5	240482	. . EDGE MOULDING LH W/FLUTED PANEL				1	
5	240418	. . EDGE MOULDING LH W/FLUTED & SS RAIL RECESS				1	O
NS	500283	. . SCREW TC TR PH #10-24x3/4 SS				2	
6	571755	. . SPACERS BUTTITE STAINLESS				15	
7	240436	. . MOUNTING PLATE EDGE 43.2MM x 25MM				15	
8	502622	. . SCREW CAP HEX M6-1.0x20 SS BK				2	
9	240412	. . LEVER / FOR LOCK				1	
NS	502803	. . PIN HITCH CLIP 3/32 x 2 1/2 SS				1	
10	500868	. . NUT HEX NYRT M8-1.25 Z050				1	
10	502543	. . NUT HEX M8-1.25 Z050				1	
11	471119	. . SEAL WASHER / RUB RAIL & PANEL				1	
11	500874	. . WASHER FL 8.4x17.0x1.6 Z050				1	
12	502589	. . SCREW CAP HEX M8-1.25x25 G8.8 Z050				1	
13	504527	. . BUMPER PLUG / .625ODx.312THx.250HOLEx.125				4	
14	472830	. . SPRING GUIDE HOLDER				2	
15	5001182	. . NUT HEX NYRT M6-1.0 SS				17	
NS	681092	. . ADHESIVE SIKA #255FC / BLACK / 310ml CARTRIDGE				AR	
NS	683097	. . CLEANER SIKA #205 / CLEAR / 1000ml				AR	
NS	683446	. . PRIMER SIKA #206 / BLACK / 1000ml				AR	
NS	506790	. . TAPE RUB ADH2 CC POL 1/16" x 1/2" x 200' / BLACK I1C-N-A				AR	
20	477634	PANEL FRONT L.H. FORWARD / B.A.				1	
21	477633	PANEL FRONT L.H. BACKWARD / B.A.				1	
22	477637	PANEL LOWER / 95MM X 243MM / B.A.				1	
23	477638	PANEL LOWER / 217MM X 255MM / B.A.				1	
24	240528	EDGE MOULDING W/FLUTED PANEL				1	
24	240415	EDGE MOULDING W/FLUTED & SS RAIL RECESS				1	O
25	571755	SPACERS BUTTITE STAINLESS				22	
26	240436	MOUNTING PLATE EDGE 43.2MM x 25MM				22	
27	5001182	NUT HEX NYRT M6-1.0 SS				22	
30	504488	RIVET MGLP PRDG 3/16x17/64 SS				14	
31	**Y2-0663-00**	**DOCK & CORNERING LIGHT**					
32	**Y2-1855-00**	**RUB RAIL - EXTERIOR CREST & TRIMS**					

From 7-9096 To 8-9278		Date:07/2024	PAGE:Y2-1857-51

FENDERS L.H. - MTH 45 ENT

Item#	Part	Description	XLII 45	XLII MTH40	XLII MTH45	XLII MTH45E	NOTES
33	476719	PANEL LOWER / 286MM X 255MM / B.A.				2	
34	476718	PANEL LOWER / 240MM X 205MM / B.A. To 8-9276				1	
34	476798	PANEL LOWER / 88MM X 205MM / B.A. From 8-9279				1	
		O) WITH "OPTION"					

From Y-7046 To 8-9339		Date:07/2024	PAGE:Y2-1857-55
FENDERS R.H. - MTH			

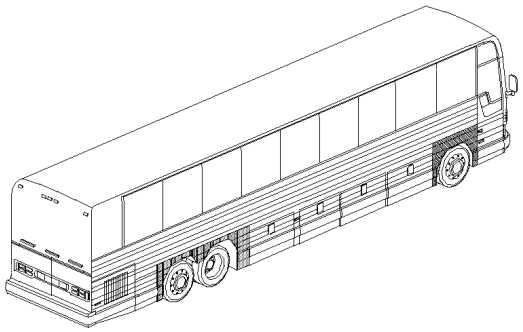

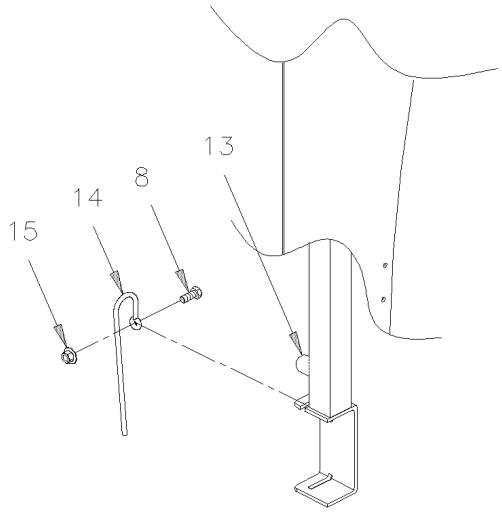

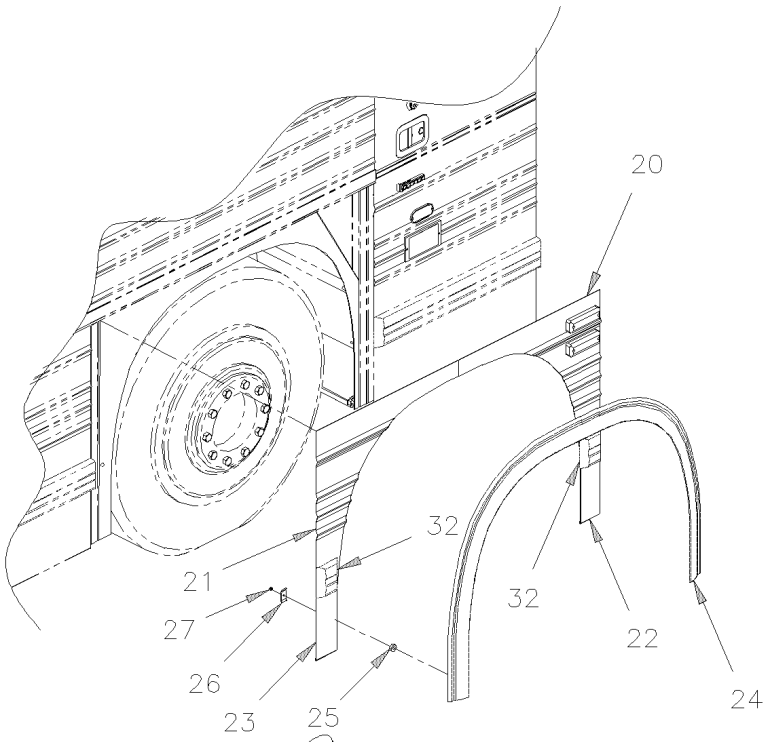

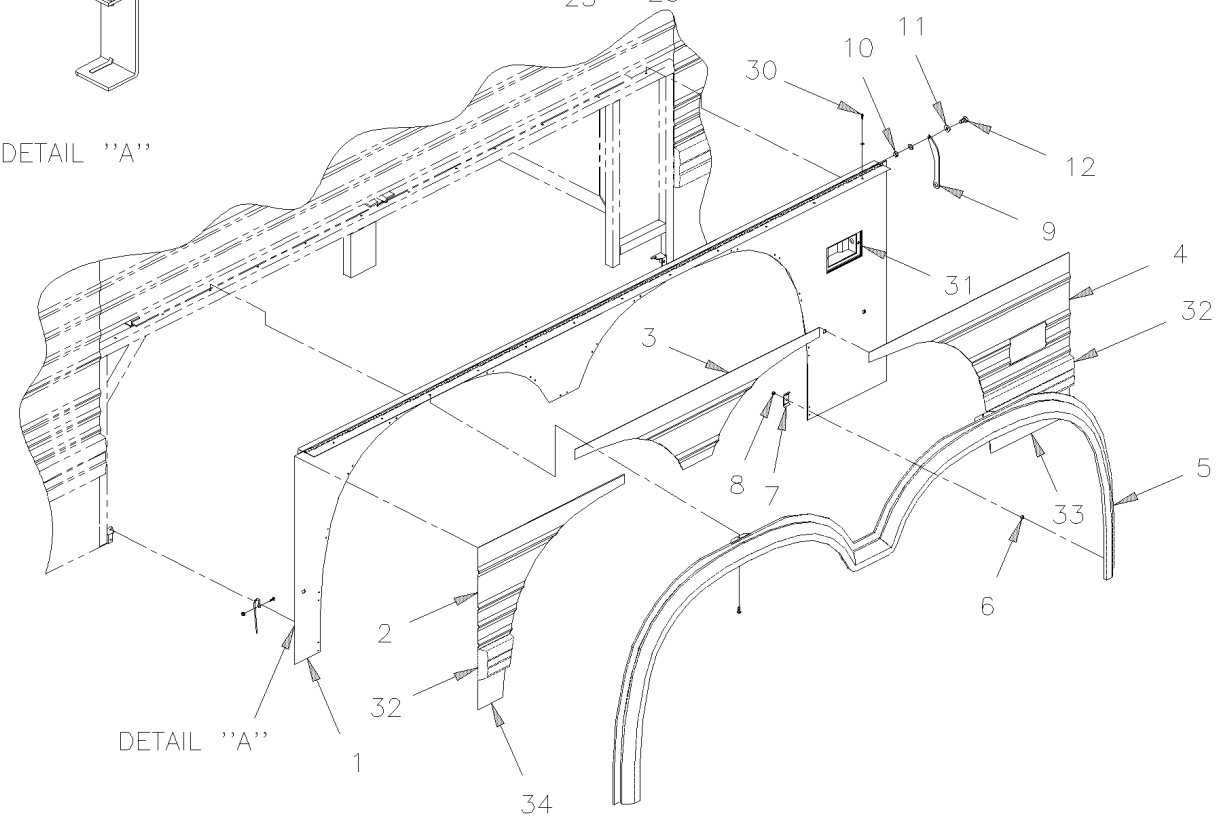

From Y-7046 To 8-9339		Date:07/2024	PAGE:Y2-1857-55

FENDERS R.H. - MTH

Item#	Part	Description	XLII 45	XLII MTH40	XLII MTH45	XLII MTH45E	NOTES
		"WARNING" - "WARNING" -"WARNING" - "WARNING"					
		FOR MTH-45 ENT FROM 7-9096					
		SEE NEXT PAGE Y2-1857-56					
	474498	REAR FENDER ASSY R.H. W/EDGE / S.B. To Y-7379		1	1	1	
	474957	REAR FENDER ASSY R.H. W/EDGE / S.B. From Y-7380 To 5-8468		1	1	1	
	477630	REAR FENDER ASSY R.H. W/EDGE / B.A. From 5-8469		1	1	1	
	474111	. REAR FENDER ASSY R.H. W/OUT EDGE / S.B. To 5-8468		1	1	1	
	477627	. REAR FENDER ASSY R.H. W/OUT EDGE / B.A. From 5-8469		1	1	1	
1	213940	. . FRAME REAR FENDER R.H.		1	1	1	
2	474351	. . PANEL REAR R.H BACKWARD To 5-8468		1	1	1	
2	477640	. . PANEL REAR R.H BACKWARD / B.A. From 5-8469		1	1	1	
3	474354	. . PANEL CENTER / S.B. To 5-8468		1	1	1	
3	477562	. . PANEL CENTER / B.A. From 5-8469		1	1	1	
4	474353	. . PANEL REAR R.H. FORWARD To 5-8468		1	1	1	
4	477559	. . PANEL REAR R.H. FORWARD / B.A. From 5-8469		1	1	1	
5	240435	. . EDGE MOULDING RH W/FLUTED & SS RAIL RECESS		1	1	1	
5	240483	. . EDGE MOULDING RH W/FLUTED PANEL		1	1	1	
6	571755	. . SPACERS BUTTITE STAINLESS		15	15	15	
7	240436	. . MOUNTING PLATE EDGE 43.2MM x 25MM		15	15	15	
8	502622	. . SCREW CAP HEX M6-1.0x20 SS BK		2	2	2	
9	240412	. . LEVER / FOR LOCK		1	1	1	
9	502803	. . PIN HITCH CLIP 3/32 x 2 1/2 SS		1	1	1	
10	500868	. . NUT HEX NYRT M8-1.25 Z050		1	1	1	
10	502543	. . NUT HEX M8-1.25 Z050		1	1	1	
11	471119	. . SEAL WASHER / RUB RAIL & PANEL		1	1	1	
11	500874	. . WASHER FL 8.4x17.0x1.6 Z050		1	1	1	
12	502589	. . SCREW CAP HEX M8-1.25x25 G8.8 Z050		1	1	1	
13	504527	. . BUMPER PLUG / .625ODx.312THx.250HOLEx.125		4	4	4	
14	472830	. . SPRING GUIDE HOLDER		2	2	2	
15	5001182	. . NUT HEX NYRT M6-1.0 SS		17	17	17	
20	474610	PANEL FRONT R.H. FORWARD / S.B. To 3-8164		1	1	1	
20	473676	PANEL FRONT R.H. FORWARD / S.B. From 4-8165 To 5-8358		1	1	1	
20	476355	PANEL FRONT R.H. FORWARD / S.B. From 5-8359 To 5-8468		1	1	1	
20	477635	PANEL FRONT R.H. FORWARD / B.A. From 5-8469		1	1	1	
21	474356	PANEL FRONT R.H. BACKWARD / S.B. To 3-8164		1	1		
21	474232	PANEL FRONT R.H. BACKWARD / S.B. From 4-8165 To 5-8468		1	1		
21	477631	PANEL FRONT R.H. BACKWARD / B.A. From 5-8469		1	1		
21	474361	PANEL FRONT R.H. BACKWARD / S.B. To 4-8164				1	
21	473546	PANEL FRONT R.H. BACKWARD / S.B. From 5-8165 To 5-8468				1	
21	477636	PANEL FRONT R.H. BACKWARD / B.A. From 5-8469				1	
22	474004	PANEL LOWER / 95MM X 243MM / S.B. To 5-8468		1	1	1	

From Y-7046 To 8-9339		Date:07/2024	PAGE:Y2-1857-55

FENDERS R.H. - MTH

Item#	Part	Description	XLII 45	XLII MTH40	XLII MTH45	XLII MTH45E	NOTES
22	477637	PANEL LOWER / 95MM X 243MM / B.A. From 5-8469		1	1	1	
23	474006	PANEL LOWER / 103MM X 255MM / S.B. To 5-8468		1	1		
23	477537	PANEL LOWER / 103MM X 255MM / B.A. From 5-8469		1	1		
23	474262	PANEL LOWER / 217MM X 255MM / S.B. To 5-8468				1	
23	477638	PANEL LOWER / 217MM X 255MM / B.A. From 5-8469				1	
24	240415	EDGE MOULDING W/FLUTED & SS RAIL RECESS		1	1	1	
24	240481	EDGE MOULDING W/FLUTED PANEL To 4-8193		1	1	1	
24	240528	EDGE MOULDING W/FLUTED PANEL From 4-8194		1	1	1	
25	571755	SPACERS BUTTITE STAINLESS		22	22	22	
26	240436	MOUNTING PLATE EDGE 43.2MM x 25MM		22	22	22	
27	474003	PANEL LOWER / 394MM X 255MM / S.B. To 5-8468		2	2	2	
27	477563	PANEL LOWER / 394MM X 255MM / B.A. From 5-8469		2	2	2	
30	504488	RIVET MGLP PRDG 3/16x17/64 SS		14	14	14	
31	**Y2-0663-00**	**DOCK & CORNERING LIGHT**					
32	**Y2-1855-00**	**RUB RAIL - EXTERIOR CREST & TRIMS**					
33	474003	PANEL LOWER / 394MM X 255MM / S.B. To 5-8468		1	1	1	
33	477563	PANEL LOWER / 394MM X 255MM / B.A. From 5-8469		1	1	1	
34	473995	PANEL LOWER / 127MM X 205MM / S.B. To 5-8468		1	1	1	
34	477632	PANEL LOWER / 127MM X 205MM / B.A. From 5-8469		1	1	1	

From 7-9096 To 8-9278		Date:07/2024	PAGE:Y2-1857-56
FENDERS R.H. - MTH 45 ENT			

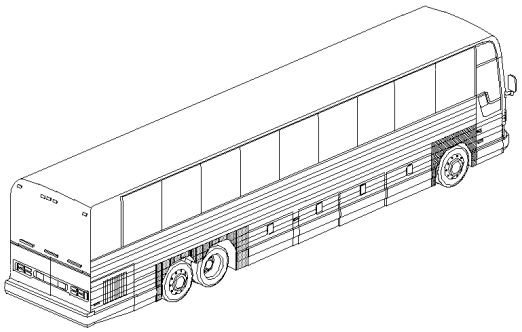

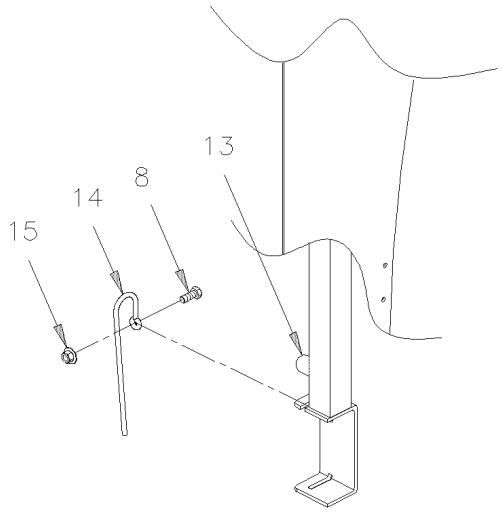

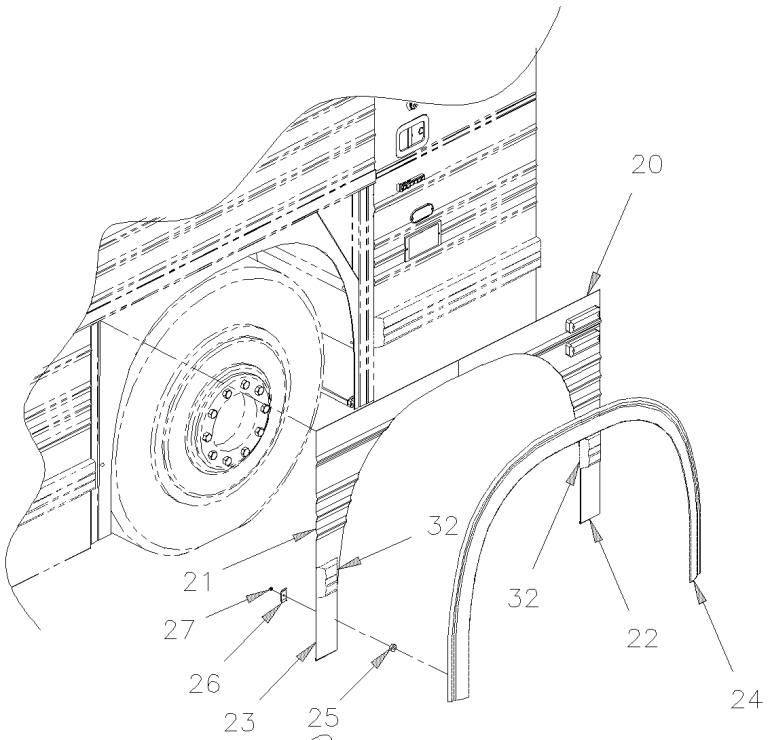

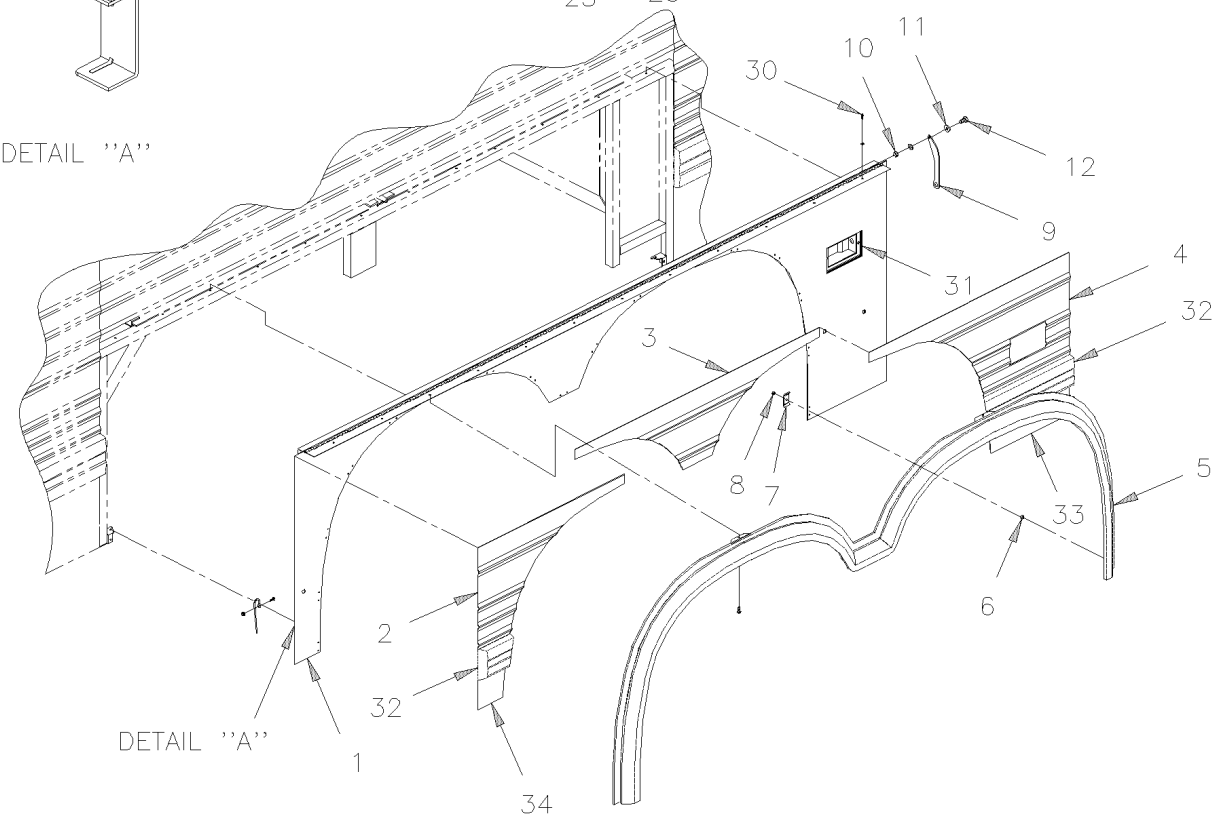

From 7-9096 To 8-9278		Date:07/2024	PAGE:Y2-1857-56

FENDERS R.H. - MTH 45 ENT

Item#	Part	Description	XLII 45	XLII MTH40	XLII MTH45	XLII MTH45E	NOTES
	460503	REAR FENDER ASSY R.H. W/EDGE / B.A. To 8-9276				1	
	460508	. REAR FENDER ASSY R.H. W/OUT EDGE / B.A. To 8-9276				1	
1	460501	. . FRAME REAR FENDER R.H. To 8-9276				1	
2	476715	. . PANEL REAR R.H BACKWARD				1	
3	477562	. . PANEL CENTER / B.A.				1	
4	476717	. . PANEL REAR R.H. FORWARD / B.A.				1	
5	240483	. . EDGE MOULDING RH W/FLUTED PANEL				1	
5	240435	. . EDGE MOULDING RH W/FLUTED & SS RAIL RECESS				1	O
6	571755	. . SPACERS BUTTITE STAINLESS				15	
7	240436	. . MOUNTING PLATE EDGE 43.2MM x 25MM				15	
8	502622	. . SCREW CAP HEX M6-1.0x20 SS BK				2	
9	240412	. . LEVER / FOR LOCK				1	
9	502803	. . PIN HITCH CLIP 3/32 x 2 1/2 SS				1	
10	500868	. . NUT HEX NYRT M8-1.25 Z050				1	
10	502543	. . NUT HEX M8-1.25 Z050				1	
11	471119	. . SEAL WASHER / RUB RAIL & PANEL				1	
11	500874	. . WASHER FL 8.4x17.0x1.6 Z050				1	
12	502589	. . SCREW CAP HEX M8-1.25x25 G8.8 Z050				1	
13	504527	. . BUMPER PLUG / .625ODx.312THx.250HOLEx.125				4	
14	472830	. . SPRING GUIDE HOLDER				2	
15	5001182	. . NUT HEX NYRT M6-1.0 SS				17	
20	477635	PANEL FRONT R.H. FORWARD / B.A.				1	
21	477636	PANEL FRONT R.H. BACKWARD / B.A.				1	
22	477637	PANEL LOWER / 95MM X 243MM / B.A.				1	
23	477638	PANEL LOWER / 217MM X 255MM / B.A.				1	
24	240528	EDGE MOULDING W/FLUTED PANEL				1	
24	240415	EDGE MOULDING W/FLUTED & SS RAIL RECESS				1	O
25	571755	SPACERS BUTTITE STAINLESS				22	
26	240436	MOUNTING PLATE EDGE 43.2MM x 25MM				22	
27	5001182	NUT HEX NYRT M6-1.0 SS				22	
30	504488	RIVET MGLP PRDG 3/16x17/64 SS				14	
31	**Y2-0663-00**	**DOCK & CORNERING LIGHT**					
32	**Y2-1855-00**	**RUB RAIL - EXTERIOR CREST & TRIMS**					
33	476719	PANEL LOWER / 286MM X 255MM / B.A.				1	
34	476718	PANEL LOWER / 240MM X 205MM / B.A.				1	
		O) WITH "OPTION"					

From Y-7046 To 8-9339		Date:07/2024	PAGE:Y2-1859-00
SPLASH GUARD - FRONT & REAR			

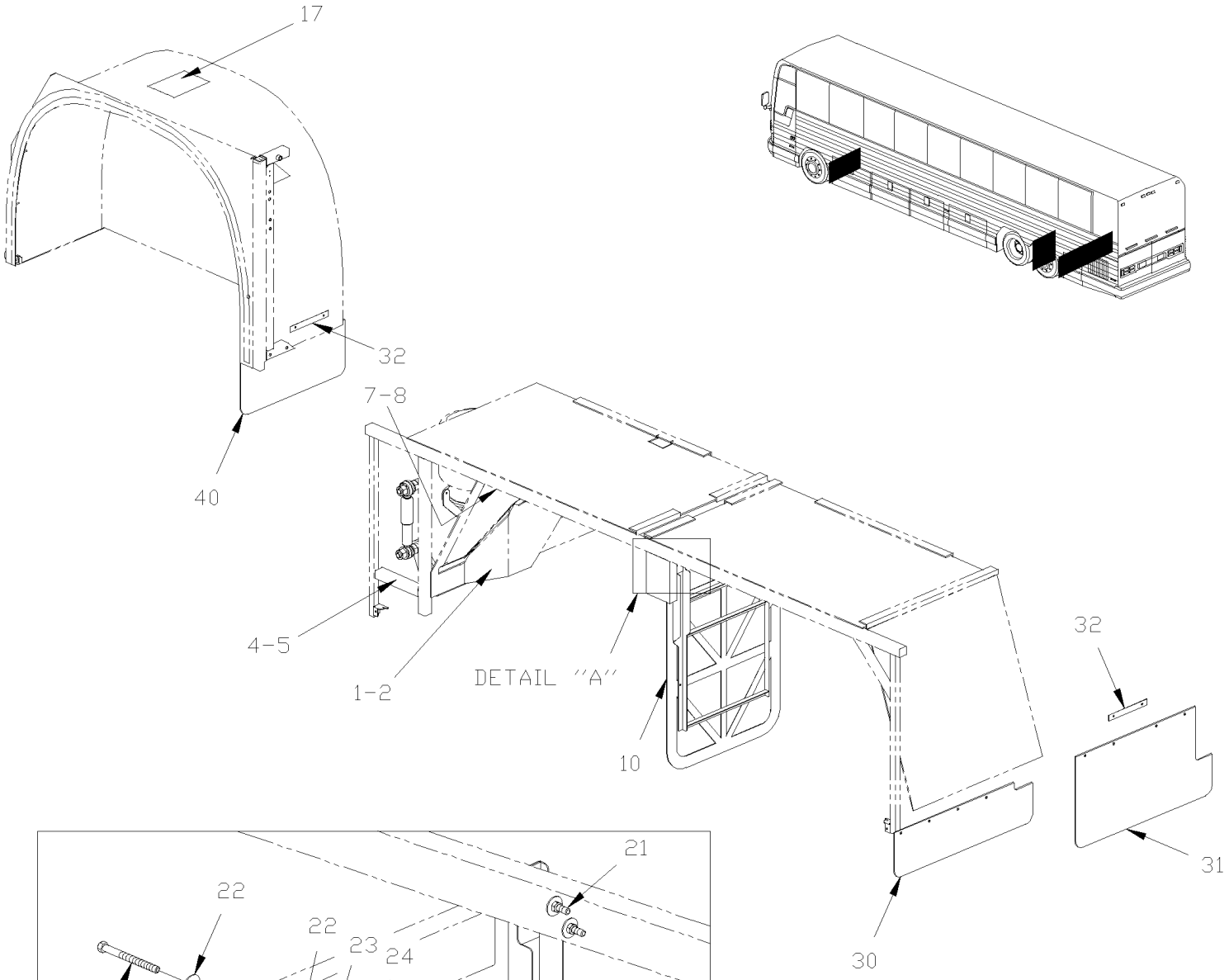

From Y-7046 To 8-9339		Date:07/2024	PAGE:Y2-1859-00
SPLASH GUARD - FRONT & REAR			

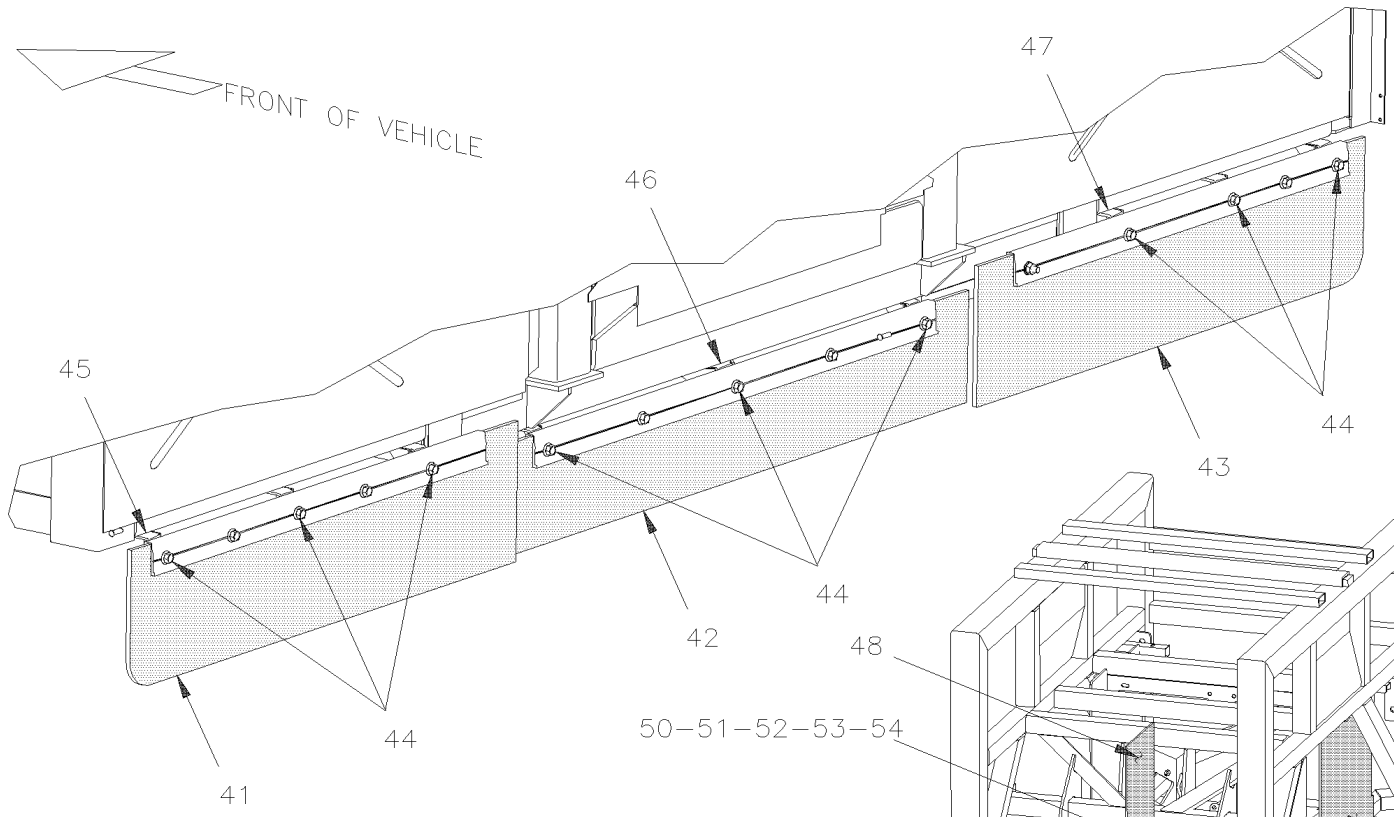

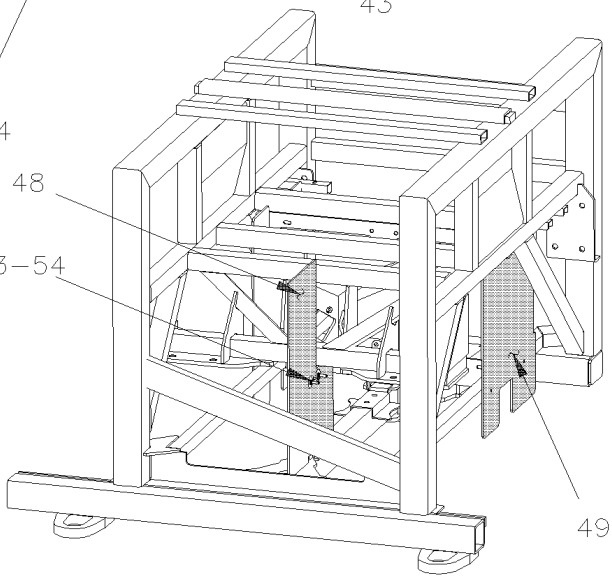

IND. SUSP. UP TO 3–8164

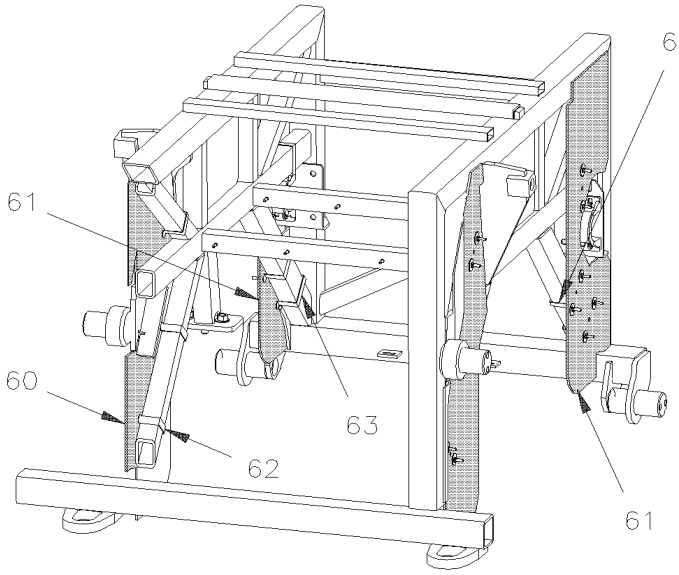

RIGID SUSP.

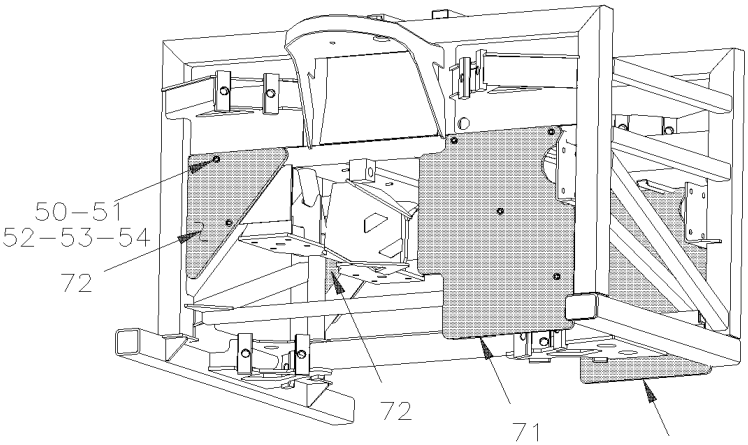

IND. SUSP. FROM 4–8165

From Y-7046 To 8-9339		Date:07/2024	PAGE:Y2-1859-00

SPLASH GUARD - FRONT & REAR

Item#	Part	Description	XLII 45	XLII MTH40	XLII MTH45	XLII MTH45E	NOTES
1	460413	SPLASH GUARD RH	1		1		
1	460413	SPLASH GUARD RH To 7-9095		1		1	
1	460644	SPLASH GUARD RH From 7-9096				1	
2	460414	SPLASH GUARD LH	1		1		
2	460414	SPLASH GUARD LH To 7-9095		1		1	
2	460645	SPLASH GUARD LH From 7-9096				1	
4	214382	SUPPORT LH	1		1		
4	214382	SUPPORT LH To 7-9095		1		1	
4	460646	SUPPORT From 7-9096				1	
5	214404	SUPPORT RH	1		1		
5	214404	SUPPORT RH To 7-9095		1		1	
5	460646	SUPPORT From 7-9096				1	
7	500440	WASHER FL .250x.562x.065 Z050	7		7		
7	500440	WASHER FL .250x.562x.065 Z050 To 7-9095		7		7	
7	5001169	SCREW TP CAP HEXW #12x3/4 SS410 From 7-9096				12	
8	500441	WASHER FL .312x.734x.065 Z050	7		7		
8	500441	WASHER FL .312x.734x.065 Z050 To 7-9095		7		7	
8	500411	WASHER FL .260x.697x.050 SS From 7-9096				12	
10	460358	SPLASH GUARD / L.H. & R.H. / DRIVE & TAG	2		2		
10	460358	SPLASH GUARD / L.H. & R.H. / DRIVE & TAG To 7-9095		2		2	
10	460643	SPLASH GUARD / R.H. DRIVE & TAG From 7-9096				1	
10	460637	SPLASH GUARD / L.H. DRIVE & TAG From 7-9096				1	
11	460357	. SUPPORT L.H. & R.H.	1		1		
11	460357	. SUPPORT L.H. & R.H. To 7-9095		1		1	
11	460638	. SUPPORT L.H. & R.H. From 7-9096				1	
12	460351	. RUBBER PAD	1		1		
. NS	960015	. . RUBBER PAD	1		1		
12	460351	. RUBBER PAD To 7-9095		1		1	
. NS	960015	. . RUBBER PAD To 7-9095		1		1	
12	460642	. RUBBER PAD R.H. From 7-9096				1	
. NS	960015	. . RUBBER PAD From 7-9096				1	
12	460641	. RUBBER PAD L.H. From 7-9096				1	
. NS	960015	. . RUBBER PAD From 7-9096				1	
12	960015	. . RUBBER PAD	1	1	1	1	
13	502737	. SCREW CAP HEX M6-1.0x25 SS BK	AR		AR		
13	502737	. SCREW CAP HEX M6-1.0x25 SS BK To 7-9095		AR		AR	
13	5001636	. SCREW CAP HEX M6-1.0x50 SS BK From 7-9096				AR	
14	500411	. WASHER FL .260x.697x.050 SS	AR		AR		
15	502573	. WASHER FL 6.4x12.5x1.6 SS	AR		AR		
15	502573	. WASHER FL 6.4x12.5x1.6 SS To 7-9095		AR		AR	
15	5001182	. NUT HEX NYRT M6-1.0 SS From 7-9096				AR	
17	214485	ACCESS PANEL PLASTIC L.H. 278MM x 278MM To 2-7805			1		

From Y-7046 To 8-9339		Date:07/2024	PAGE:Y2-1859-00

SPLASH GUARD - FRONT & REAR

Item#	Part	Description	XLII 45	XLII MTH40	XLII MTH45	XLII MTH45E	NOTES
17	214668	ACCESS PANEL PLASTIC L.H. 275MM x 625MM From 7-7806			1		
NS	504249	RIVET CHY Q PRDG 3/16x3/8 SS			1		
NS	504379	RIVET POP DOME OE 3/16x1/4 SS			1		
NS	790482	SCELLANT BUTYL / NOIR "GUERTIN"			1		
20	5001185	SCREW CAP HEX M8-1.25x80 SS BK	4	4	4	4	
21	5001186	SCREW CAP HEX M8-1.25x90 SS BK	4	4	4	4	
22	500270	WASHER FL .406x1.000x.063 SS	8	8	8	8	
23	5001161	WASHER LO SPT 8.1x14.8x2.0 SS-304	4	4	4	4	
24	5001188	NUT HEX M8-1.25 SS	4	4	4	4	
30	460397	SPLASH GUARD / BEHIND TAG AXLE STREETSIDE 730MM x 273MM To 6-8906	1				
30	460397	SPLASH GUARD / BEHIND TAG AXLE STREETSIDE 730MM x 273MM From 4-8165 To 5-8523		1	1	1	
30	460458	SPLASH GUARD / BEHIND TAG AXLE STREETSIDE 730MM x 400MM From 5-8524			1		
31	460396	SPLASH GUARD / BEHIND TAG AXLE CURBSIDE 730MM x 740MM To 6-8906	1				
31	460396	SPLASH GUARD / BEHIND TAG AXLE CURBSIDE 730MM x 740MM		1	1	1	
32	460189	STRIP, FIXATION / SS 203MM W/2 HOLES To 6-8906	4				
NS	500923	SCREW TC CAP HEX 1/4-20x3/4 Z050 To 6-8906	1				
40	490081	SPLASH GUARD / BEHIND FRONT AXLE 9" X 22"	2	2	2	2	
NS	500165	SCREW CAP HEX 1/4-20x1 G5 Z050 To 6-8906	8				
NS	500473	WASHER LO SPT .262x.489x.062 Z050 To 6-8906	8				
NS	500769	NUT HEX 1/4-20 Z050 To 6-8906	8				
NS	507335	PROTECTOR CAP / BLACK / .234 I.D. x .500 To 6-8906	8				
41	460449	AIR SHIELD DEFLECTOR ASSY / STREETSIDE	1	1	1	1	
. NS	460443	. AIR SHIELD DEFLECTOR	1	1	1	1	
. NS	460433	. EXTRUSION ALUMINUM / STREETSIDE	1	1	1	1	
42	460450	AIR SHIELD DEFLECTOR ASSY / CENTER	1	1	1	1	
. NS	460444	. AIR SHIELD DEFLECTOR / CENTER	1	1	1	1	
. NS	460434	. EXTRUSION ALUMINUM / CENTER	1	1	1	1	
43	460451	AIR SHIELD DEFLECTOR ASSY / CURBSIDE	1	1	1	1	
. NS	460445	. AIR SHIELD DEFLECTOR / CURBSIDE	1	1	1	1	
. NS	460435	. EXTRUSION ALUMINUM / CURBSIDE	1	1	1	1	
44	502912	SCREW CAP HEXF M8-1.25x25 SS BK	15	15	15	15	
44	502911	NUT HEXF M8-1.25 SS	6			6	
45	460440	SUPPORT / AIR SHIELD / STREETSIDE	1	1	1	1	
46	460441	SUPPORT / AIR SHIELD / CENTER	1	1	1	1	
47	460442	SUPPORT / AIR SHIELD / CURBSIDE	1	1	1	1	
48	460452	AIR SHIELD DEFLECTOR / FORWARD / W/IND SUSPENSION To 3-8164	1			1	A
49	460386	AIR SHIELD DEFLECTOR / BACKWARD / W/IND SUSPENSION To 3-8164	2				A
50	464663	COLLAR ASSY / W/IND SUSPENSION / 44MM FORWARD To 3-8164	2	2	2	2	C
51	502565	NUT HEX M6-1.0 SS	AR	AR	AR	AR	
52	502570	WASHER LO SPT 6.1x11.8x1.6 SS	AR	AR	AR	AR	
53	502573	WASHER FL 6.4x12.5x1.6 SS	AR	AR	AR	AR	
54	502810	SCREW TP CAP HEXW FL M6.3-1.81x30 PHC To 6-8906	8				

From Y-7046 To 8-9339		Date:07/2024	PAGE:Y2-1859-00

SPLASH GUARD - FRONT & REAR

Item#	Part	Description	XLII 45	XLII MTH40	XLII MTH45	XLII MTH45E	NOTES
60	460439	AIR SHIELD DEFLECTOR / FORWARD / W/RIGID SUSPENSION	1			1	B
61	460446	AIR SHIELD DEFLECTOR / BACKWARD / W/RIGID SUSPENSION	1			1	B
62	464665	COLLAR ASSY / W/"I BEAM SUSPENSION / 57MM BACKWARD To 3-8164	6			6	B
63	464664	COLLAR ASSY / W/"I BEAM SUSPENSION / 82MM BACKWARD To 3-8164	6			6	B
NS	460436	KIT RETROFIT AIR SHIELD DEFLECTOR / W/IND SUSPENSION	1			1	
. NS	D460031	. SEE DRAWING	1			1	
NS	460437	KIT RETROFIT AIR SHIELD DEFLECTOR / W/RIGID SUSPENSION	1			1	
. NS	D460031	. SEE DRAWING	1			1	
71	460455	AIR SHIELD DEFLECTOR / FORWARD / W/IND SUSPENSION From 4-8165 To 6-8805	2	2	2	2	
71	460492	AIR SHIELD DEFLECTOR / FORWARD / W/IND SUSPENSION From 6-8806	2	2	2	2	
72	460456	DEFLECTOR, FRONT From 4-8165	2	2	2	2	
		A) BUS W/INDEPENDANT SUSPENSION ONLY					
		B) INCLUDE INRETROFIT KIT #460437					
		C) INCLUDE IN RETROFIT KIT #460436					

From Y-7046 To 2-7764		Date:07/2024	PAGE:Y2-1860-10
SPARE WHEEL DOOR ASSY			

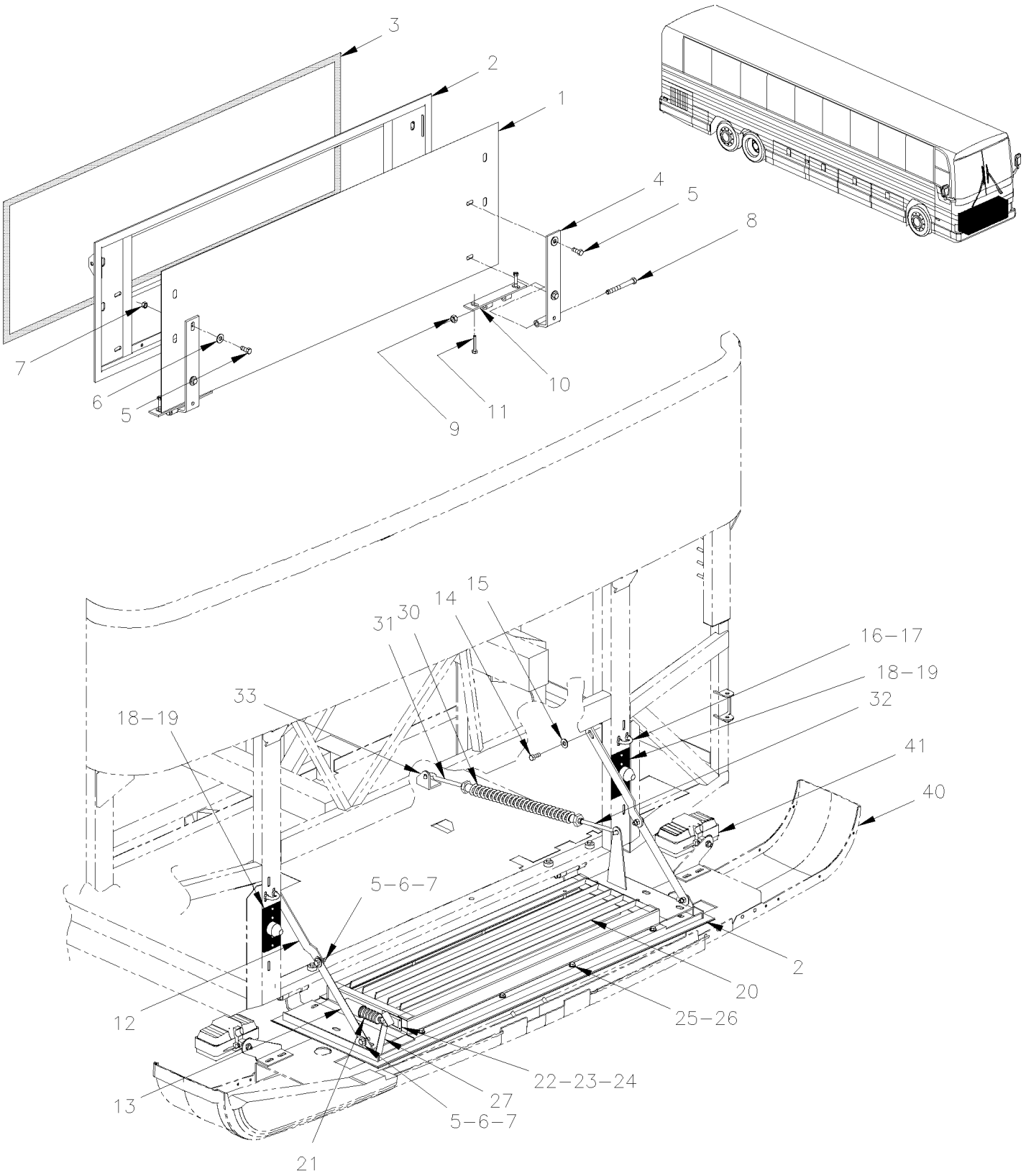

From Y-7046 To 2-7764		Date:07/2024	PAGE:Y2-1860-10

SPARE WHEEL DOOR ASSY

Item#	Part	Description	XLII 45	XLII MTH40	XLII MTH45	XLII MTH45E	NOTES
	286702P	SPARE WHEEL DOOR ASSY / W/HINGE	1				A
	287350	SPARE WHEEL DOOR ASSY / W/PLAIN PANEL		1	1	1	
	287352	SPARE WHEEL DOOR ASSY / W/PERFORATED		1	1	1	
	287354	SPARE WHEEL DOOR ASSY / W/HINGE				1	C
	286718	. SPARE WHEEL DOOR ASSY	1				A
1	286576	. . PANEL, PLASTIC	1				A
1	473710	. . PANEL, PLAIN PANEL		1	1	1	
1	473711	. . PANEL, PERFORATED		1	1	1	
2	285869	. . FRAME		1	1	1	
2	286995	. . FRAME		1	1	1	
2	287002	. . FRAME	1				A
3	285891	. RUBBER SEAL EXTRUSION / SPARE WHEEL DOOR	1	1	1	1	
3	289935	. RUBBER SEAL EXTRUSION / SPARE WHEEL DOOR	1	1	1	1	
3	288907	. RUBBER SEAL EXTRUSION / SPARE WHEEL DOOR	1	1	1	1	
3	2800124	. RUBBER SEAL EXTRUSION / SPARE WHEEL DOOR	1	1	1	1	
4	286094	. HINGE UPPER SECTION		2	2	2	
4	287939	. HINGE UPPER SECTION / W/REINFORCEMENT	2				A
5	500191	SCREW CAP HEX 3/8-16x1 G5 Z050	8	8	8	8	
6	500445	WASHER FL .437x1.000x.083 Z050	16	16	16	16	
7	500265	NUT HEX STO 3/8-16 Z050	8	8	8	8	
8	500080	SCREW CAP HEX 7/16-20x4 1/2 G5 Z050	1	1	1	1	
9	500714	NUT HEX STO 7/16-20 Z050	1	1	1	1	
10	286092	HINGE LOWER SECTION	1	1	1	1	
11	500214	SCREW CAP HEX 1/2-13x1 1/4 G5 Z050	4	4	4	4	
NS	500482	WASHER LO SPT .506x.873x.125 Z050	4	4	4	4	
NS	500448	WASHER FL .625x1.469x.109 ZP	4	4	4	4	
12	281348	. ARM, TIRE DOOR SUPPORT SUPERIOR	2	2	2	2	
13	281347	. ARM, TIRE DOOR SUPPORT INFERIOR	2	2	2	2	
14	500192	SCREW CAP HEX 3/8-16x1 1/4 G5 Z050	4	4	4	4	
15	500444	WASHER FL .406x.812x.065 Z050	8	8	8	8	
NS	500265	NUT HEX STO 3/8-16 Z050	2	2	2	2	
16	5001424	U-BOLT 1" I.D. x 2 3/16 x 5/16-18 SS	2	2	2	2	
17	5001083	NUT HEXF NYRT 5/16-18 Z050	8	8	8	8	
18	410668	RUBBER BUMPER 61.4MM X 48MM	4	4	4	4	
19	500310	SCREW TC FL PH #10-24x1 1/4 SS410	8	8	8	8	
20	051570	SHUTTER ASSY		1	1	1	
. NS	550568	. CYLINDER AIR / SHUTTER / W/4" MOUNT		1	1	1	
. NS	550569	. BOOT RUBBER		1	1	1	
. NS	550577	. SPRING EXTENSION / .350 O.D. x 6.875 x .069		1	1	1	
. NS	550179	. BUSHING 5/16" I.D. / NYLON		AR	AR	AR	
NS	550577	. SPRING EXTENSION / .350 O.D. x 6.875 x .069		1	1	1	
21	550568	. CYLINDER AIR / SHUTTER / W/4" MOUNT		1	1	1	

From Y-7046 To 2-7764		Date:07/2024	PAGE:Y2-1860-10

SPARE WHEEL DOOR ASSY

Item#	Part	Description	XLII 45	XLII MTH40	XLII MTH45	XLII MTH45E	NOTES
NS	550569	. . BOOT RUBBER		1	1	1	
NS	550179	. . BUSHING 5/16" I.D. / NYLON		1	1	1	
21	641365	MALE ELBOW 45° NON-SWIVEL / PUSH-IN FITTING / #4x1/8NPT-M BR		1	1	1	
NS	640996	MALE ELBOW 90º / NTA FITTING / #4x1/8NPT-M BR		1	1	1	
NS	503402	TUBE, NYLON 1/4 O.D. / BLACK S.L.		1	1	1	
22	282953	PLATE, CLOSING		1	1	1	
23	282954	GASKET		1	1	1	
24	504340	RIVET POP DOME OE 1/8x3/16 SS		4	4	4	
25	500639	SCREW CAP HEXS 5/16-18x7/8 ZP		8	8	8	
26	500441	WASHER FL .312x.734x.065 Z050	8	8	8	8	
NS	500476	WASHER LO SPT .317x.586x.078 Z050	8	8	8	8	
27	410656	SAFETY HOOK	1	1	1	1	
30	285156	SPRING ASSY To 1-7546	1	1	1	1	
30	410836	SPRING ASSY From 1-7547	1	1	1	1	B
31	5001238	. SCREW HOOK 3/8-16x5 ZP	1	1	1	1	
NS	500102	. NUT HEX 3/8-16 SS	1	1	1	1	
32	5001239	. SCREW HOOK 3/8-16x5 LH ZP	1	1	1	1	
NS	5061019	. NUT HEX LH 3/8-16 SS	1	1	1	1	
33	285155	ANGLE SUPPORT BUMPER SPRING	1	1	1	1	
NS	288003	KIT SPRING CLEARENCE STEERING BOX XLII SPARE WHEEL DOOR To 2-7764	1	1	1	1	
. NS	IS-01095	. SEE INSTRUCTION SHEET To 2-7764					
40	**Y2-1850-00**	**BUMPER FRONT**					
41	**Y2-0661-00**	**FOG LAMP**					
		A) ALSO USE WITH MTH-45S WITH SPARE TIRE					
		B) PRODUCT IMPROVMENT ASK KIT #288003					
		C) USE W/OUT SPARE & WITH BLACK BUMPER					

From 2-7765 To 8-9339		Date:07/2024	PAGE:Y2-1860-11
SPARE WHEEL DOOR ASSY			

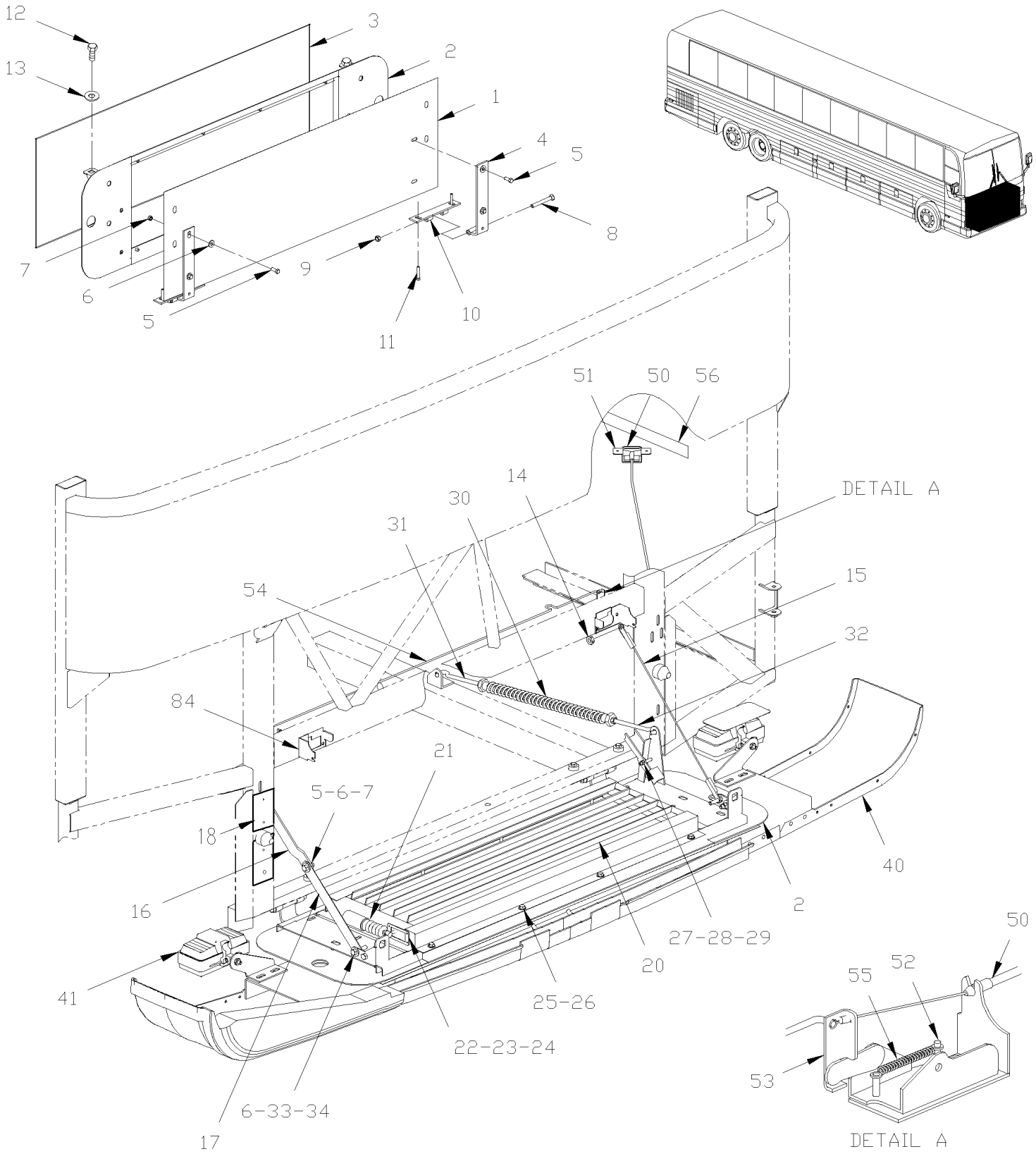

From 2-7765 To 8-9339		Date:07/2024	PAGE:Y2-1860-11

SPARE WHEEL DOOR ASSY

Item#	Part	Description	XLII 45	XLII MTH40	XLII MTH45	XLII MTH45E	NOTES
	287252P	SPARE WHEEL DOOR ASSY / W/HINGE To 6-8906	1				
	287351	SPARE WHEEL DOOR ASSY / W/PLAIN PANEL		1	1	1	
	287353	SPARE WHEEL DOOR ASSY / W/PERFORATED		1	1	1	
	287355	SPARE WHEEL DOOR ASSY / W/HINGE				1	C
1	287289	. PANEL, PLASTIC	1			1	A
1	287299	. PANEL, PERFORATED / S.B. To 5-8468		1	1	1	
1	288536	. PANEL, PERFORATED / B.A. From 5-8469		1	1	1	
1	287300	. PANEL, PLAIN PANEL / S.B. To 5-8468		1	1	1	
1	288535	. PANEL, PLAIN PANEL WITHOUT ACB SYSTEM / B.A. From 5-8469		1	1	1	
2	287294	. FRAME ASSY To 2-7890		1	1	1	
2	287386	. FRAME ASSY From 2-7891		1	1	1	
2	287955	. FRAME ASSY To 2-7890	1			1	A
2	287385	. FRAME ASSY From 2-7891	1			1	A
3	285891	. RUBBER SEAL EXTRUSION / SPARE WHEEL DOOR To 5-8650	1	1	1	1	
3	289935	. RUBBER SEAL EXTRUSION / SPARE WHEEL DOOR From 5-8651	1	1	1	1	
3	288907	. RUBBER SEAL EXTRUSION / SPARE WHEEL DOOR	1	1	1	1	
3	2800124	. RUBBER SEAL EXTRUSION / SPARE WHEEL DOOR	1	1	1	1	
4	287265	. HINGE UPPER SECTION / W/REINFORCEMENT To 4-8358	2				A
4	288564	. HINGE UPPER SECTION From 4-8359	2	2	2	2	
4	287266	. HINGE UPPER SECTION To 4-8358		2	2	2	
5	955535	. SCREW CAP HEX 3/8-16x1 1/4 G5 ZG603	4	4	4	4	
NS	287383	. RETAINING PLATE W/NUT / 195MM X 30MM	2	2	2	2	
6	500445	. WASHER FL .437x1.000x.083 Z050	10	10	10	10	
NS	500897	. WASHER FL .437x1.000x.083 N500	6	6	6	6	
7	500102	. NUT HEX 3/8-16 SS	6	6	6	6	
8	500080	. SCREW CAP HEX 7/16-20x4 1/2 G5 Z050	2	2	2	2	
9	3853273	. NUT HEX STO 7/16-20 ZG603	2	2	2	2	
10	287264	. HINGE LOWER SECTION To 4-8358	2	2	2	2	
10	288563	. HINGE LOWER SECTION From 4-8359	2	2	2	2	
11	500214	. SCREW CAP HEX 1/2-13x1 1/4 G5 Z050	4	4	4	4	
11	500482	. WASHER LO SPT .506x.873x.125 Z050	4	4	4	4	
11	500448	. WASHER FL .625x1.469x.109 ZP	4	4	4	4	
12	284438	. PIN STRIKER	2	2	2	2	
13	284447	. WASHERS BELLEVILLE	2	2	2	2	
14	500265	NUT HEX STO 3/8-16 Z050	AR	AR	AR	AR	
15	287284	CABLE DOOR ASSY 550MM To 2-7851	2	2	2	2	
15	287284	CABLE DOOR ASSY 550MM From 2-7852	1	1	1	1	
16	281348	ARM, TIRE DOOR SUPPORT SUPERIOR From 2-7852	1	1	1	1	
17	281347	ARM, TIRE DOOR SUPPORT INFERIOR From 2-7852	1	1	1	1	
18	287258	RUBBER BUMPER 126MM X 48MM From 5-8359	4	4	4	4	
NS	502903	SCREW TC FL PH #10-24x1 1/4 N500 From 5-8359	8	8	8	8	
NS	411084	SHIM SPACER	4	4	4	4	

From 2-7765 To 8-9339		Date:07/2024	PAGE:Y2-1860-11

SPARE WHEEL DOOR ASSY

Item#	Part	Description	XLII 45	XLII MTH40	XLII MTH45	XLII MTH45E	NOTES
20	051570	SHUTTER ASSY		1	1	1	
. NS	550568	. CYLINDER AIR / SHUTTER / W/4" MOUNT		1	1	1	
. NS	550569	. BOOT RUBBER		1	1	1	
. NS	550577	. SPRING EXTENSION / .350 O.D. x 6.875 x .069		1	1	1	
. NS	550179	. BUSHING 5/16" I.D. / NYLON		AR	AR	AR	
NS	550577	. SPRING EXTENSION / .350 O.D. x 6.875 x .069		1	1	1	
21	550568	. CYLINDER AIR / SHUTTER / W/4" MOUNT		1	1	1	
NS	550569	. BOOT RUBBER		1	1	1	
NS	550179	. BUSHING 5/16" I.D. / NYLON		AR	AR	AR	
NS	641365	MALE ELBOW 45° NON-SWIVEL / PUSH-IN FITTING / #4x1/8NPT-M BR		1	1	1	
NS	640996	MALE ELBOW 90º / NTA FITTING / #4x1/8NPT-M BR		1	1	1	
NS	503402	TUBE, NYLON 1/4 O.D. / BLACK S.L.		8	8	8	
22	282953	PLATE, CLOSING		1	1	1	
23	282954	GASKET		1	1	1	
24	504340	RIVET POP DOME OE 1/8x3/16 SS		1	1	1	
25	500639	SCREW CAP HEXS 5/16-18x7/8 ZP To 6-8906	8				
26	500441	WASHER FL .312x.734x.065 Z050	AR	AR	AR	AR	
NS	500476	WASHER LO SPT .317x.586x.078 Z050	AR	AR	AR	AR	
27	287274	DOOR LOCKER	1	1	1	1	
28	502170	PIN, CLEVIS 5/16 x 1 5/8 SS	1	1	1	1	
29	502097	PIN, COTTER 3/32 x 3/4	1	1	1	1	
30	285156	SPRING ASSY To 2-7890	1	1	1	1	
30	410836	SPRING ASSY From 2-7891	1	1	1	1	
31	5001238	. SCREW HOOK 3/8-16x5 ZP	1	1	1	1	
NS	500102	. NUT HEX 3/8-16 SS	1	1	1	1	
32	5001239	. SCREW HOOK 3/8-16x5 LH ZP	1	1	1	1	
NS	5061019	. NUT HEX LH 3/8-16 SS	1	1	1	1	
33	500197	SCREW CAP HEX 3/8-16x1 G5 N500	2	2	2	2	
34	500265	NUT HEX STO 3/8-16 Z050	2	2	2	2	
40	**Y2-1850-01**	**BUMPER FRONT To 4-8358**					
40	**Y2-1850-02**	**BUMPER FRONT From 4-8359**					
41	**Y2-0660-01**	**HEADLAMP & FRONT DIRECTIONAL LAMPS ROUND "HALOGENE" & "XENON"**					
50	287285	CABLE HANDLE ASSY To 8-9292	1	1	1	1	
50	289495	CABLE HANDLE ASSY From 8-9293	1	1	1	1	
NS	504379	RIVET POP DOME OE 3/16x1/4 SS	4	4	4	4	
51	287288	SUPPORT / HANDLE To 8-9292	1	1	1	1	
51	289981	SUPPORT / HANDLE From 8-9293	1	1	1	1	
NS	502500	SCREW TC BDG PH #8-32x1/2 CJ	2	2	2	2	
NS	5001378	WASHER LO EXT 5.3x10x0.6 Z050	2	2	2	2	
52	780588	LOCK SPAGNOLET R.H. / W/G-FITTING To 2-7755	2	2	2	2	
. NS	780340	. CLIP, RETAINER ROD To 2-7755	1	1	1	1	
. NS	507607	. GREASE FITTING / M6-1.00 To 2-7755	1	1	1	1	

From 2-7765 To 8-9339		Date:07/2024	PAGE:Y2-1860-11

SPARE WHEEL DOOR ASSY

Item#	Part	Description	XLII 45	XLII MTH40	XLII MTH45	XLII MTH45E	NOTES
52	780653	LOCK SPAGNOLET R.H. / W/G-FITTING From 2-7756 To 3-8108	2				
. NS	780340	. CLIP, RETAINER ROD From 2-7756 To 3-8108	1				
. NS	507607	. GREASE FITTING / M6-1.00 From 2-7756 To 3-8108	1				
52	780653	LOCK SPAGNOLET R.H. / W/G-FITTING From 3-8109 To 6-8906	1				
. NS	780340	. CLIP, RETAINER ROD From 3-8109 To 6-8906	1				
. NS	507607	. GREASE FITTING / M6-1.00 From 3-8109 To 6-8906	1				
52	780652	LOCK SPAGNOLET L.H. / W/G-FITTING From 3-8109 To 6-8906	1				
. NS	780340	. CLIP, RETAINER ROD From 3-8109 To 6-8906	1				
. NS	507607	. GREASE FITTING / M6-1.00 From 3-8109 To 6-8906	1				
52	780653	LOCK SPAGNOLET R.H. / W/G-FITTING From 2-7756		2	2	2	
. NS	780340	. CLIP, RETAINER ROD From 2-7756		1	1	1	
. NS	507607	. GREASE FITTING / M6-1.00 From 2-7756		1	1	1	
NS	502582	WASHER LO SERR 6.1x16.2x0.9 Z050	4	4	4	4	
NS	502531	SCREW CAP HEX M6-1.0x16 G8.8 Z050	4	4	4	4	
53	287256	LEVER PIVOT To 8-9292	2	2	2	2	
53	289496	LEVER PIVOT From 8-9293			1	1	
NS	504379	RIVET POP DOME OE 3/16x1/4 SS	2	2	2	2	
54	287257	ROD To 3-8108	1				
54	287424	ROD From 3-8109 To 6-8906	1				
54	287257	ROD		1	1	1	
55	284914	SPRING EXTENSION / .305 O.D. x 1.562 x .051	2	2	2	2	
56	287290	DECAL / "UNLATCH FRONT BUMPER" / ENGLISH & FRANCAIS	1	1	1	1	
56	288199	DECAL / "UNLATCH FRONT BUMPER" / ENGLISH & SPANISH	1	1	1	1	
84	287255	SUPPORT SPAGNOLET To 3-8108	2				
84	287255	SUPPORT SPAGNOLET LH From 3-8109 To 6-8906	1				
84	287423	SUPPORT SPAGNOLET RH From 3-8109 To 6-8906	1				
84	287255	SUPPORT SPAGNOLET To 4-8207			2	2	
84	287255	SUPPORT SPAGNOLET LH From 4-8208 To 8-9292			1	1	
84	289497	SUPPORT SPAGNOLET LH From 8-9293			1	1	
84	287423	SUPPORT SPAGNOLET RH From 4-8208			1	1	
		A) ALSO USE WITH MTH-45S WITH SPARE TIRE					
		C) USE W/OUT SPARE & WITH BLACK BUMPER					

From Y-7046 To 6-8906		Date:07/2024	PAGE:Y2-1862-00
ENTRANCE DOOR ASSY - BUS			

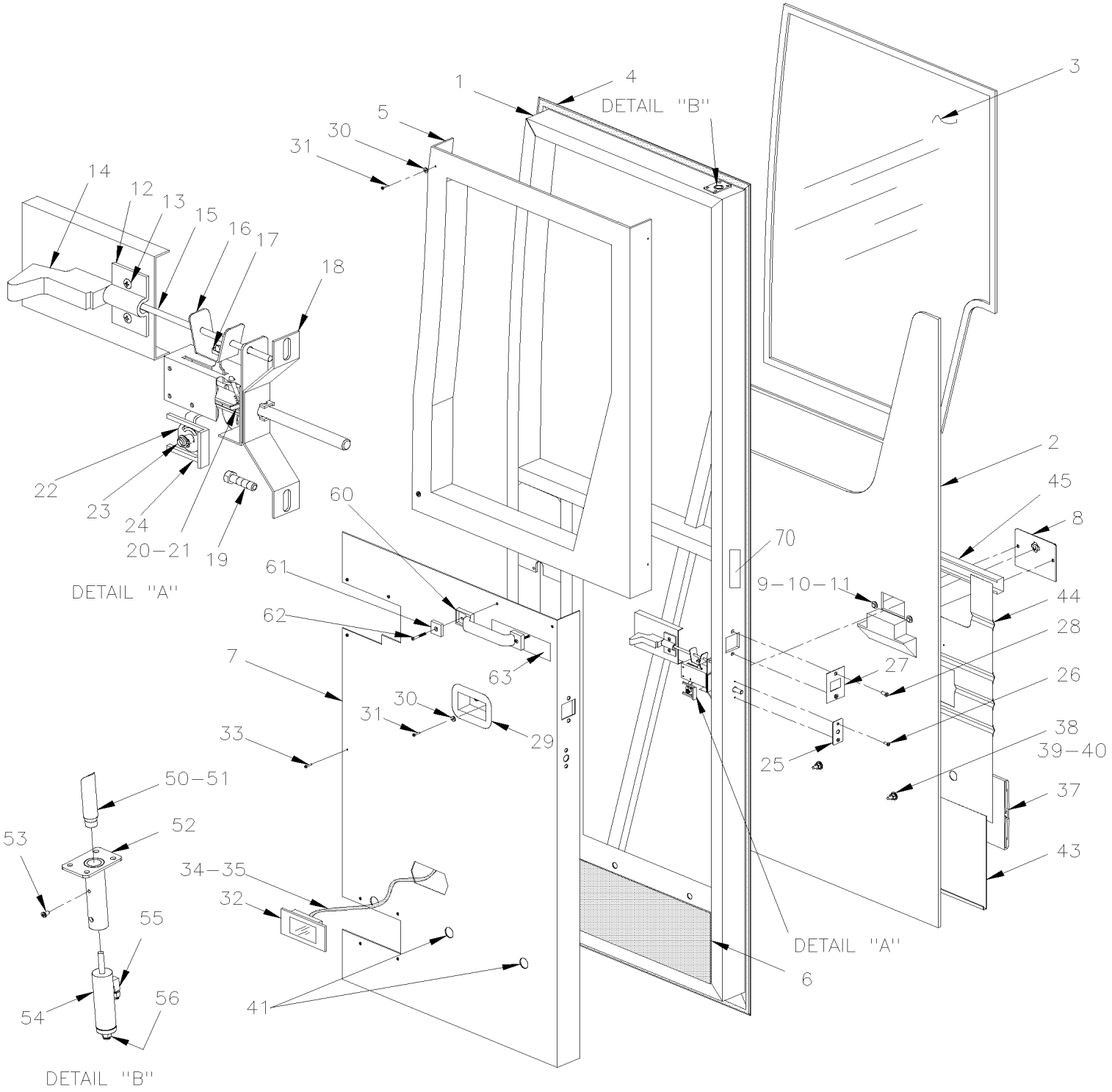

From Y-7046 To 6-8906		Date:07/2024	PAGE:Y2-1862-00

ENTRANCE DOOR ASSY - BUS

Item#	Part	Description	XLII 45	XLII MTH40	XLII MTH45	XLII MTH45E	NOTES
		ALL DOORS ASSY DO NOT INCLUDE					
		RUB-RAIL PLEASE ORDER SEPARATELY					
	286672P	ENTRANCE DOOR ASSY To 1-7661	1				
	287123P	ENTRANCE DOOR ASSY From 1-7662	1				
	287357	ENTRANCE DOOR ASSY / W/FLUTED PANEL	1				A
	287356	ENTRANCE DOOR ASSY / W/FLUTED PANEL	1				B
1	Call order desk	ENTRANCE DOOR FRAME To 1-7661	1				P
1	287108P	ENTRANCE DOOR FRAME From 1-7662	1				
2	286516	PANEL FIBERGLASS	1				B
2	287900	PANEL FIBERGLASS	1				A
2	288626	PANEL FIBERGLASS WITH LIGHT	1				F
3	286463	ENTRANCE DOOR WINDOW	1				
4	286464	RUBBER SEAL EXTRUSION / ENTRANCE DOOR To 2-7722	1				
4	287976	RUBBER SEAL EXTRUSION / ENTRANCE DOOR From 2-7723 To 5-8650	1				
4	287494	RUBBER SEAL EXTRUSION / ENTRANCE DOOR From 5-8651	1				
4	288911	RUBBER SEAL EXTRUSION / ENTRANCE DOOR	1				
4	2800126	RUBBER SEAL EXTRUSION / / ENTRANCE DOOR	1				
5	286537	INTERIOR WINDOW MOULDING To 1-7661	1				
5	287122	INTERIOR WINDOW MOULDING From 1-7662	1				
6	286660	ENTRANCE DOOR INSULATING	1				
7	286536	INTERIOR PANEL To 1-7661	1				
7	287106	INTERIOR PANEL From 1-7662 To 4-8327	1				
7	289696	INTERIOR PANEL To 4-8327	1				
7	289289	INTERIOR PANEL From 4-8328	1				
7	289695	INTERIOR PANEL From 4-8328	1				
7	289282	ACCESS PANEL 834MM X 494MM From 4-8328	1				
8	286531	ENTRANCE DOOR HANDLE	1				
9	500609	NUT HEX M6-1.0 Z050	2				
10	500411	WASHER FL .260x.697x.050 SS	2				
11	502564	WASHER LO SPT 6.1x11.8x1.6 Z050	2				
12	780483	CLAMP	1				
13	500654	SCREW TC BDG PH #8-32x1/2 Z050	2				
13	502806	SCREW MA FL PH M6-1.0x10 Z050	2				
14	284127	BUTTON	1				
15	286663	ROD ENTRANCE DOOR	1				
16	286661	LOCK	1				
17	504069	GROMMET / .281x.375x.062x.250x.562	1				
18	286555	LOCK SUPPORT ASSY	1				
19	500948	SCREW TC CAP HEX 1/4-20x1 Z050	2				
20	502151	SPRING COMPRESSION / .300 O.D. x 1 x .032	2				

From Y-7046 To 6-8906		Date:07/2024	PAGE:Y2-1862-00

ENTRANCE DOOR ASSY - BUS

Item#	Part	Description	XLII 45	XLII MTH40	XLII MTH45	XLII MTH45E	NOTES
21	481564	ROD GUIDE	2				
22	286553	PIVOT LOCK 18.7MM OFFSET	1				
23	504556	RING RETAINER / EXT 6.00 x 5.00 x 0.72MM	1				
24	780236	RETAINER CLIP	1				
25	286552	FINISHING PLATE	1				
26	500654	SCREW TC BDG PH #8-32x1/2 Z050	2				
27	286585	STRIKING PLATE ASSY	1				
28	5001198	SCREW MA FL PH M6-1.0x16 Z050	2				
29	286674	LOCK HOUSING	1				
NS	506869	TAPE RUB ADH2 POL .031" X 1/4" X 300' / BLACK	AR				
30	500345	WASHER FN CKF .187x.500x.090 BR BK	7				
31	500333	SCREW TP OV PH #6x3/4 BK	7				
32	330279	LAMP ASSY 24V W/BULB	1				
. NS	830142	. LAMP	1				
. NS	562278	. BULB / 10WATT-24VOLTS / SAE# 6429	1				
32	830197	LAMP ASSY 24V LEDS	1				
NS	068140	CABLE INTERFACE 330279 TO 830197	1				
33	500814	SCREW TP BDG PH #6x3/4 BK	8				
34	065131	CABLE ASSY / ENTRANCE DOOR	1				
35	504637	CABLE TIE / 3/16" x 13"	4				
37	474290	RUB RAIL ASSY / 794MM / W/1 ½" SCREW	1				
. NS	474304	. SPECIAL SCREW ASSY SQ SS 1/4-20 X 1"½	1				
38	474304	SPECIAL SCREW ASSY SQ SS 1/4-20 X 1"½	3				
39	473378	SEAL WASHER / RUB RAIL & PANEL	3				
39	500444	WASHER FL .406x.812x.065 Z050	3				
40	502716	NUT HEX NYRT 1/4-20	3				
41	504433	SNAP-IN PLUG / 1.090 O.D.	3				
43	287144	PANEL LOWER / S.B.	1				A
44	287139	UPPER PANEL	1				A
44	287917	UPPER PANEL	1				B
45	287146	FINISHING MOULDING 800MM	1				B
50	287012	UPPER LOCK ASSY	1				
51	285271	. CATCH	1				
51	282383	. CATCH	1				
52	287011	. PLATE MOUNTING	1				
53	500560	. SCREW MA PAN PH M4-0.7x6 Z050	1				
53	502636	. WASHER LO SPT 4.1x7.6x0.9 Z050	1				
54	641392	. CYLINDER 7/8" X 1" STROKE / DOUBLE ACTION To 4-8225	1				
54	641983	. CYLINDER 7/8" X 1" STROKE / DOUBLE ACTION From 4-8226	1				
55	641369	. MALE ELBOW 90° NON-SWIVEL / PUSH-IN FITTING / #4x1/8NPT-M BR	1				
56	641242	. MALE CONNECTOR / PUSH-IN FITTING / #4x1/8NPT-M BR	1				
56	683276	. GREASE LOW TEMPERATURE 450GR	1				

From Y-7046 To 6-8906		Date:07/2024	PAGE:Y2-1862-00

ENTRANCE DOOR ASSY - BUS

Item#	Part	Description	XLII 45	XLII MTH40	XLII MTH45	XLII MTH45E	NOTES
NS	506769	TAPE RUB ADH2 CC POL 1/8" x 1/4" x 60' / BLACK H1CC-N-#14	AR				
NS	506790	TAPE RUB ADH2 CC POL 1/16" x 1/2" x 200' / BLACK I1C-N-A	AR				
NS	683097	CLEANER SIKA #205 / CLEAR / 1000ml	AR				
NS	683446	PRIMER SIKA #206 / BLACK / 1000ml	AR				
NS	681092	ADHESIVE SIKA #255FC / BLACK / 310ml CARTRIDGE	AR				
NS	683885	ADHESIVE SIKA TACK ULTRA FAST 2 / BLACK / 325ml	AR				
60	860422	HANDLE	1				
61	284049	PLUG / SQUARE / BLACK	1				
62	500360	SCREW TP FL PH #8x1 1/4 BK	2				
63	400095	DECAL / "WATCH YOUR STEP" / ENGLISH & FRANCAIS	1				
70	406050	DECAL / "C.W.A." & "T.C.A."	1				
70	157729	DECAL / WALL TO WALL TURNING DIAM 90' 3" WITH VIN #	1				
. NS	157730	. DECAL / WALL TO WALL TURNING DIAM 90' 3" W/OUT VIN RAW MATERIAL	1				
		A) ALSO USE WITH BUS WITH FLUTED LOWER PANELLLING WITH DOCKING LIGHT					
		B) ALSO USE WITH BUS WITH FLUTED LOWER PANELLLING W/OUT DOCKING LIGHT					
		F) USE WITH BUS WITH FLAT LOWER PANELLING WITH DOCKING LIGHT					
		P) CALL ORDER DESK FOR SPECIFIC APPLICATION (V.I.N.)					

From Y-7046 To 8-9339		Date:07/2024	PAGE:Y2-1862-50
ENTRANCE DOOR ASSY - MTH			

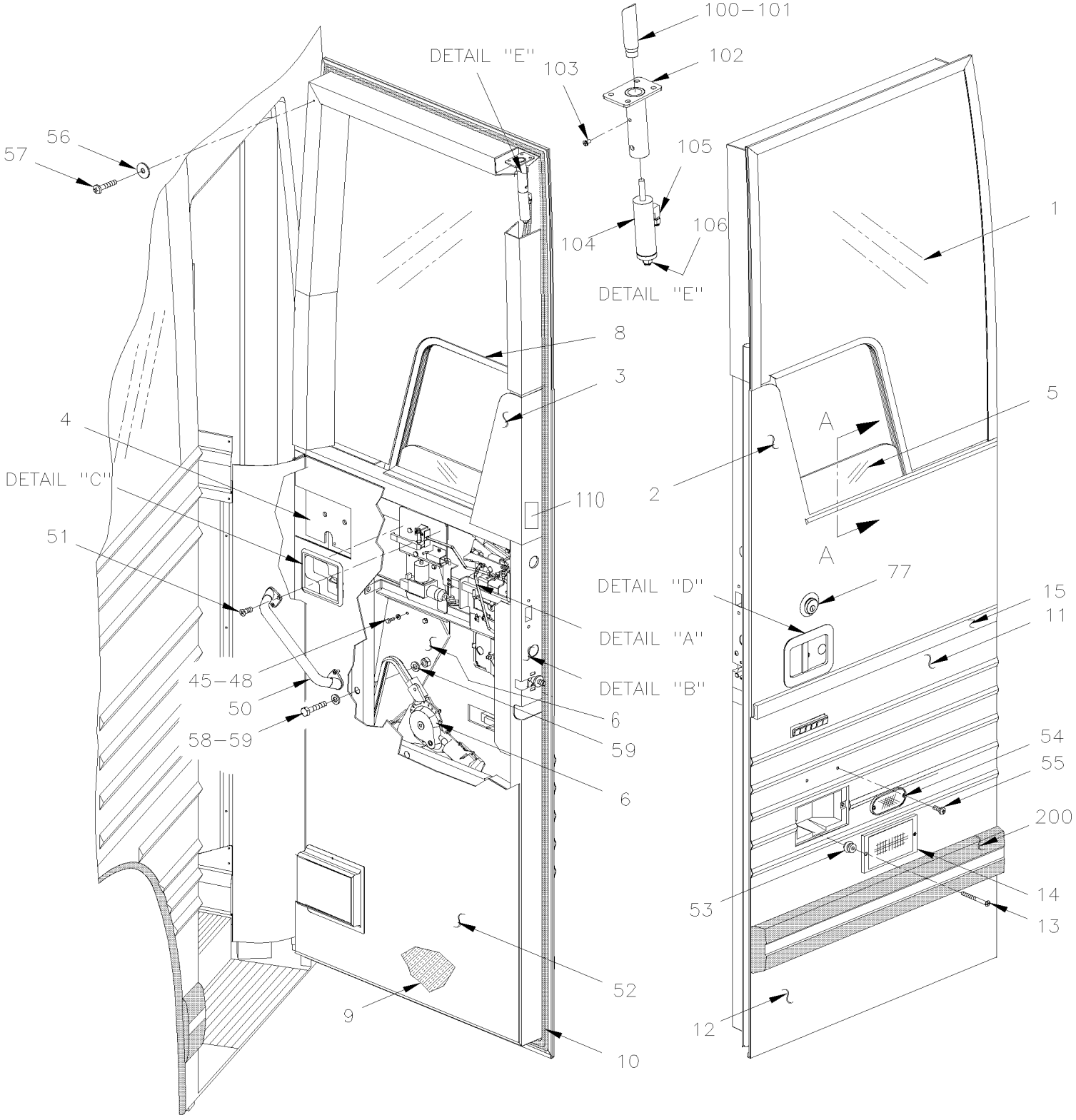

From Y-7046 To 8-9339		Date:07/2024	PAGE:Y2-1862-50
ENTRANCE DOOR ASSY - MTH			

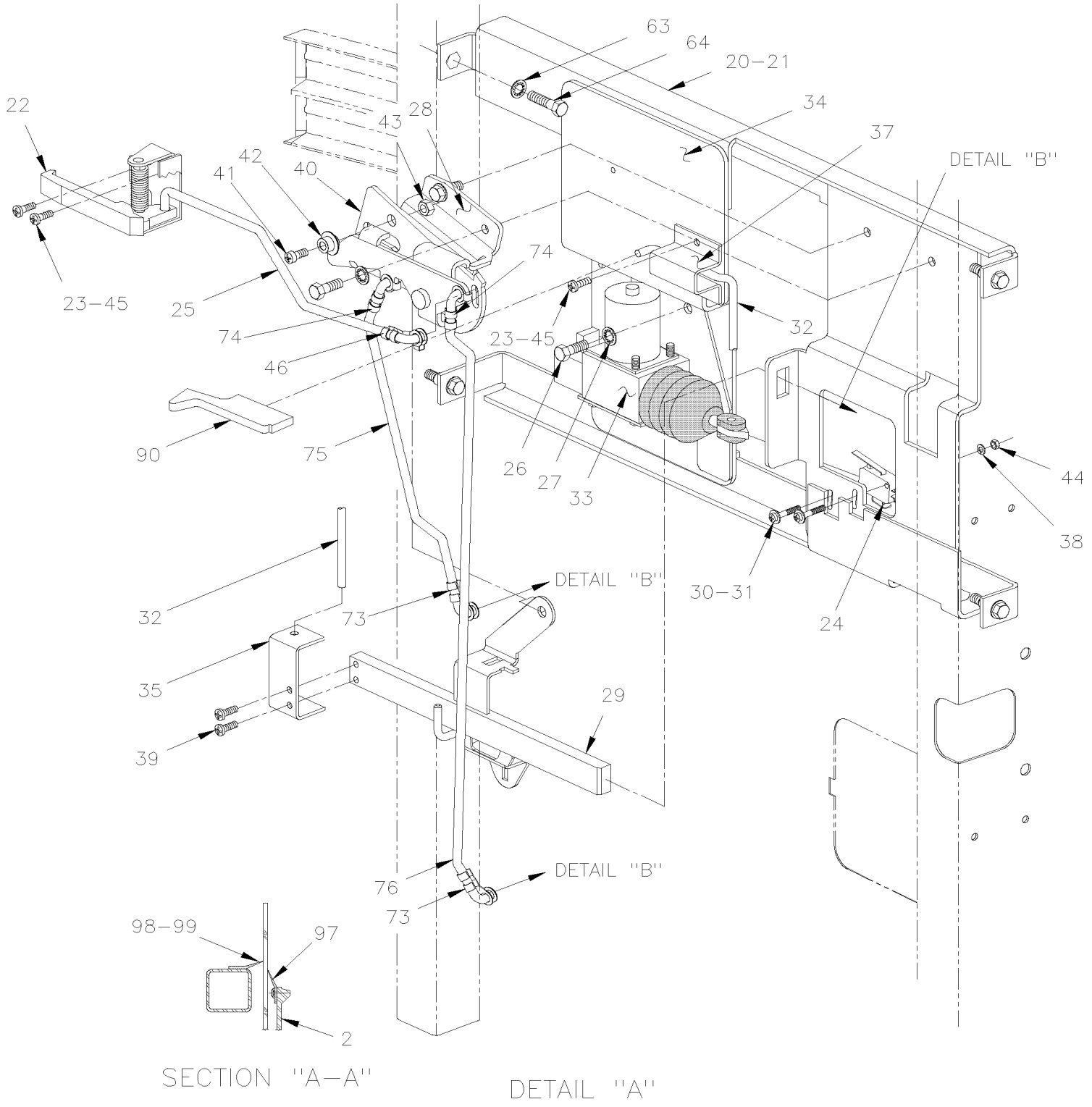

From Y-7046 To 8-9339		Date:07/2024	PAGE:Y2-1862-50
ENTRANCE DOOR ASSY - MTH			

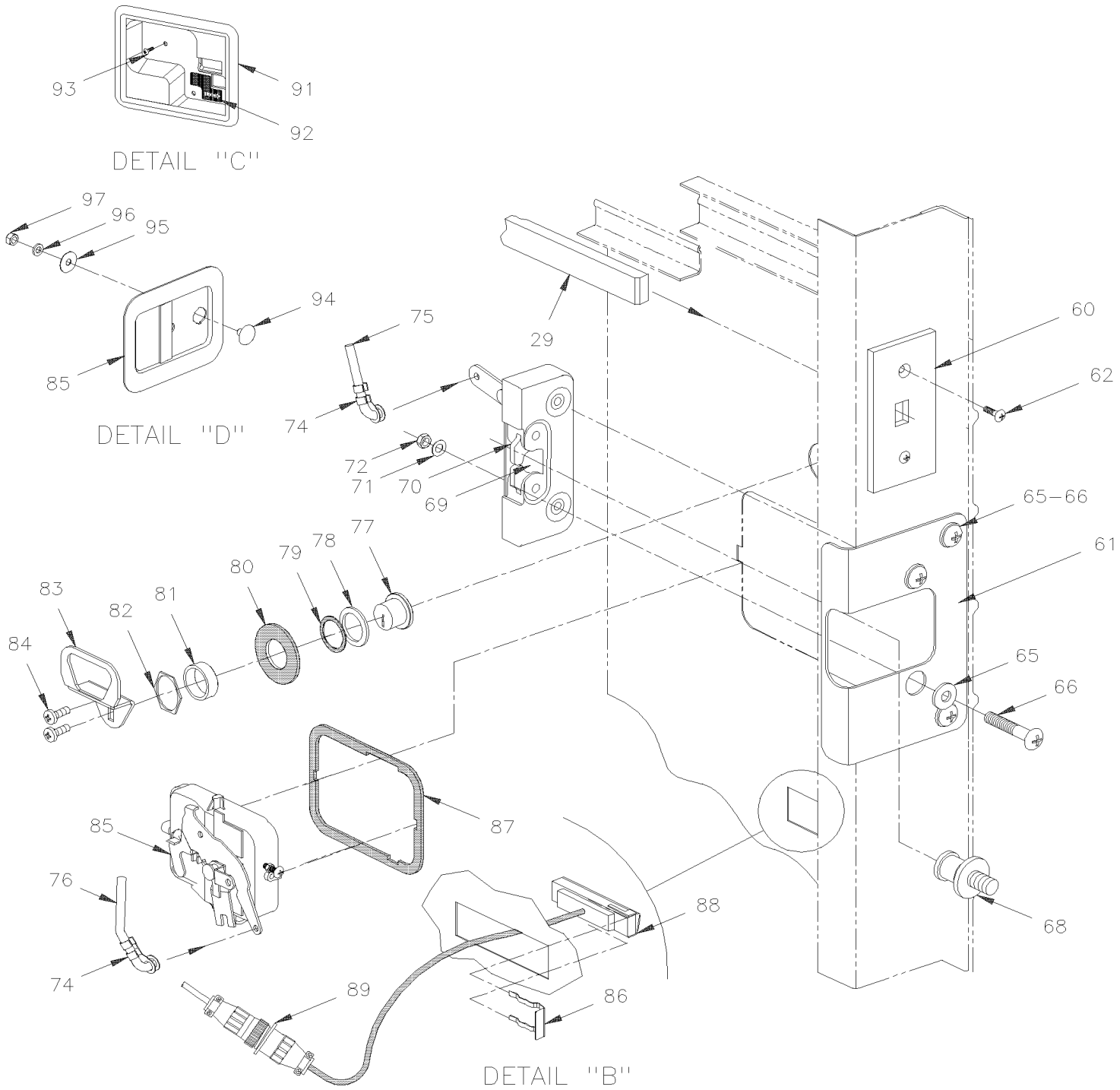

From Y-7046 To 8-9339		Date:07/2024	PAGE:Y2-1862-50

ENTRANCE DOOR ASSY - MTH

Item#	Part	Description	XLII 45	XLII MTH40	XLII MTH45	XLII MTH45E	NOTES
		ALL DOORS ASSY DO NOT INCLUDE					
		RUB-RAIL PLEASE ORDER SEPARATELY					
	287168P	ENTRANCE DOOR ASSY MTH 83" To 1-7128		1	1		
	286429P	ENTRANCE DOOR ASSY MTH 86" To 1-7662		1	1	1	
	287130P	ENTRANCE DOOR ASSY MTH 86" From 1-7663		1	1	1	
	286962P	ENTRANCE DOOR ASSY MTH 89"				1	
	287181P	ENTRANCE DOOR ASSY MTH 89"				1	
1	286080	GLASS ENTRANCE DOOR / MTH 83" To Y-7128		1	1		
1	286427	GLASS ENTRANCE DOOR / MTH 86" & 89"		1	1	1	
2	286031	PANEL UPPER / MTH 83" To Y-7128		1	1		B
2	286446	PANEL UPPER / MTH 86"		1	1	1	B
2	286715	PANEL UPPER / MTH 89"				1	
NS	504340	RIVET POP DOME OE 1/8x3/16 SS		3	3	3	
3	286124	FINISHING CAP MTH 83" To Y-7128		1	1		
3	287915	FINISHING CAP MTH 83", 86", & 89" / SERVICE		1	1		
3	286431	FINISHING CAP MTH 86" & 89" To 1-7662		1	1	1	
3	287915	FINISHING CAP MTH 83", 86", & 89" From 1-7663		1	1	1	
4	Call order desk	FRAME ASSY 83" To Y-7128		1	1		P
4	287938P	FRAME ASSY 83" / SERVICE		1	1		
4	Call order desk	FRAME ASSY 86" To 1-7662		1	1	1	P
4	287129P	FRAME ASSY 86" From 1-7663		1	1	1	
4	287136P	FRAME ASSY 89"				1	
5	286196	GLASS ASSY W/SUPPORT		1	1	1	
5	286078	GLASS		1	1	1	
5	299049	SUPPORT ASSY		1	1	1	
5	681092	ADHESIVE SIKA #255FC / BLACK / 310ml CARTRIDGE		1	1	1	
6	**Y2-1886-00**	**POWER WINDOW - ELECTRICAL INSTALLATION To 6-8901**					
6	**Y2-1886-01**	**POWER WINDOW - ELECTRICAL INSTALLATION From 6-8902**					
8	293088	MOULDING		1	1	1	
9	286226	INSULATION WITH 83" DOOR To Y-7128		1	1	1	
9	286435	INSULATION WITH 86" DOOR		1	1	1	
9	286736	INSULATION WITH 89" DOOR				1	
10	286067	RUBBER SEAL EXTRUSION / ENTRANCE DOOR MTH-83" To Y-7128		1	1		
10	287975	RUBBER SEAL EXTRUSION / ENTRANCE DOOR MTH-83"		1	1		
10	289938	RUBBER SEAL EXTRUSION / ENTRANCE DOOR MTH-83"		1	1		
10	288917	RUBBER SEAL EXTRUSION / ENTRANCE DOOR MTH-83"		1	1		
10	2800176	RUBBER SEAL EXTRUSION / ENTRANCE DOOR MTH-83"		1	1		
10	286142	RUBBER SEAL EXTRUSION / ENTRANCE DOOR MTH-86" To 2-7715		1	1	1	
10	287974	RUBBER SEAL EXTRUSION / ENTRANCE DOOR MTH-86" From 2-7716 To 5-8650		1	1	1	
10	289931	RUBBER SEAL EXTRUSION / ENTRANCE DOOR MTH-86" From 5-8651		1	1	1	

From Y-7046 To 8-9339		Date:07/2024	PAGE:Y2-1862-50

ENTRANCE DOOR ASSY - MTH

Item#	Part	Description	XLII 45	XLII MTH40	XLII MTH45	XLII MTH45E	NOTES
10	288915	RUBBER SEAL EXTRUSION / ENTRANCE DOOR MTH-86"		1	1	1	
10	2800162	RUBBER SEAL EXTRUSION / ENTRANCE DOOR MTH-86"		1	1	1	
10	286725	RUBBER SEAL EXTRUSION / ENTRANCE DOOR MTH-89" To 2-7771				1	
10	287977	RUBBER SEAL EXTRUSION / ENTRANCE DOOR MTH-89" From 2-7772 To 5-8650				1	
10	289932	RUBBER SEAL EXTRUSION / ENTRANCE DOOR MTH-89" From 5-8651				1	
10	288916	RUBBER SEAL EXTRUSION / ENTRANCE DOOR MTH-89"				1	
10	2800129	RUBBER SEAL EXTRUSION / / ENTRANCE DOOR MTH-89"				1	
11	286981	PANEL CENTER / MTH W/DOCKING LAMP / S.B. To 5-8468		1	1	1	
11	288523	PANEL CENTER / MTH W/DOCKING LAMP / B.A. From 5-8469		1	1	1	
12	286130	PANEL LOWER / S.B. To 5-8468		1	1	1	
12	288524	PANEL LOWER / B.A. From 5-8469		1	1	1	
NS	504335	RIVET POP DOME CLE 3/16x1/4 AL		2	2	2	
NS	500437	WASHER FL .125x.375x.040 Z050		2	2	2	
13	502530	SCREW MA OV PH M4-0.7x40 SS		2	2	2	
14	**Y2-0663-00**	**DOCK & CORNERING LIGHT**					
15	286084	FINISHING MOULDING SS 800MM / S.B. To 5-8468		1	1	1	
15	288522	FINISHING MOULDING 800MM / B.A. From 5-8469		1	1	1	
20	286218	. MECHANISM ASSY To 1-7515		1	1	1	
20	287211	. MECHANISM ASSY From 1-7516 To 5-8431		1	1	1	F
20	288554	. MECHANISM ASSY From 5-8432		1	1	1	
21	285732	. . SUPPORT ASSY To 1-7515		1	1	1	
21	287212	. . SUPPORT ASSY From 1-7516		1	1	1	
22	780484	. . LEVER, RELEASE		1	1	1	
23	500654	. . SCREW TC BDG PH #8-32x1/2 Z050		4	4	4	
24	561677	. . MICRO SWITCH		1	1	1	
NS	680066	. . ADHESIVE / ADBOND #5014 / 23.6ML BOTTLE		AR	AR	AR	
25	283387	. . ROD		1	1	1	
26	500472	. . WASHER LO INT .256x.478x.028 Z050		4	4	4	
27	502531	. . SCREW CAP HEX M6-1.0x16 G8.8 Z050		4	4	4	
28	285748	. . SHUTTER, RELEASE ASSY To 1-7515		1	1	1	
28	287213	. . SHUTTER, RELEASE ASSY From 1-7516 To 5-8431		1	1	1	F
28	288552	. . SHUTTER, RELEASE ASSY From 5-8432		1	1	1	
29	286217	. . BAR ASSY, RIVETED		1	1	1	
30	5001412	. . SCREW MA CHE PH M3-0.5x20 EMN		2	2	2	
31	500591	. . WASHER FL 4.3x9.0x0.8 Z050		2	2	2	
32	284836	. . ROD		1	1	1	
33	780428	. . LOCK ACTUATOR / 12V		1	1	1	
. NS	562076	. . . CONNECTOR / PACK-CON I / FEMALE HOUSING / 2C / PED 8911772		1	1	1	
33	**2810382**	**. . ACTUATOR SERVICE KIT**		1	1	1	
34	284834	. . SUPPORT ACTUATOR		1	1	1	
35	283364	. . TIE		1	1	1	
37	780483	. . CLAMP		1	1	1	

From Y-7046 To 8-9339		Date:07/2024	PAGE:Y2-1862-50

ENTRANCE DOOR ASSY - MTH

Item#	Part	Description	XLII 45	XLII MTH40	XLII MTH45	XLII MTH45E	NOTES
38	502579	. . NUT HEX M3-0.5 NP		2	2	2	
39	500393	. . SCREW TC PAN PH #10-24x3/8 Z050		2	2	2	
40	502156	. . SPRING EXTENSION / .437 O.D. x 2 x .041		1	1	1	
41	502746	. . SCREW MA PAN PH M5-0.8x20 SS BK		1	1	1	
42	285546	. . STOPPER		1	1	1	
43	502782	. . NUT HEX NYRT M5-0.8 Z050		1	1	1	
44	502691	. . WASHER LO SPT 3.6x6.7x0.8 Z050		2	2	2	
45	680066	. . ADHESIVE / ADBOND #5014 / 23.6ML BOTTLE		AR	AR	AR	
46	504541	. . CLIP ROD 1/4" R.H.		1	1	1	
48	502806	SCREW MA FL PH M6-1.0x10 Z050		2	2	2	
50	900308	HANDLE / LONG To 1-7715		1	1	1	
50	860422	HANDLE From 1-7716		1	1	1	
50	284049	PLUG / SQUARE / BLACK From 1-7716		1	1	1	
51	500616	SCREW TP FL PH #10x3/4 Z050 To 1-7715		4	4	4	
51	500360	SCREW TP FL PH #8x1 1/4 BK From 1-7716		2	2	2	
52	286175	PANEL FINISHING / AL. / MTH 83" To Y-7128		1	1		
52	288994	PANEL FINISHING / AL. / MTH 83"		1	1		
52	286434	PANEL FINISHING / AL. / MTH 86" To 1-7662		1	1	1	
52	288995	PANEL FINISHING / AL. / MTH 86" From 1-7663 To 4-8327		1	1	1	
52	289279	PANEL FINISHING / AL. / MTH 86" From 4-8328		1	1	1	
52	287120	PANEL FINISHING / AL. / MTH 89" To 1-7662				1	
52	287311	PANEL FINISHING / AL. / MTH 89" From 1-7663 To 4-8327				1	
52	289281	PANEL FINISHING / AL. / MTH 89" From 4-8328				1	
NS	504373	PLUG BUTTON / 1.000 O.D. / BARE METAL		3	3	3	
NS	286117	FINISHING PLATE		1	1	1	
NS	289282	ACCESS PANEL 834MM X 494MM From 4-8328		1	1	1	
53	500589	NUT WELL M4-0.7x13.5		2	2	2	
54	930212	REFLECTOR AMBER 1 1/8" x 4 3/8"		1	1	1	
55	500124	SCREW TP TR PH #8x1/2 SS		2	2	2	
56	500345	WASHER FN CKF .187x.500x.090 BR BK		14	14	14	
57	5001097	SCREW TC OV PH #6-32x3/4 SS410 BK		14	14	14	
58	502622	SCREW CAP HEX M6-1.0x20 SS BK		4	4	4	
59	502573	WASHER FL 6.4x12.5x1.6 SS		4	4	4	
60	283397	GUIDE ASSY		1	1	1	
61	286117	FINISHING PLATE		1	1	1	
62	500654	SCREW TC BDG PH #8-32x1/2 Z050		2	2	2	
62	500438	WASHER FL .187x.437x.050 Z050		2	2	2	
63	502582	WASHER LO SERR 6.1x16.2x0.9 Z050		2	2	2	
64	5001433	SCREW CAP HEX M6-1.0x25 SS		1	1	1	
65	500411	WASHER FL .260x.697x.050 SS		4	4	4	
66	500559	SCREW MA TR PH 1/4-20x1 1/2 SS EMN		4	4	4	
68	780189	STRIKER & SHIM		1	1	1	A

From Y-7046 To 8-9339		Date:07/2024	PAGE:Y2-1862-50

ENTRANCE DOOR ASSY - MTH

Item#	Part	Description	XLII 45	XLII MTH40	XLII MTH45	XLII MTH45E	NOTES
70	286042	REWORK LOCK To 1-7662		1	1	1	
70	780592	LATCH, LH. From 1-7663		1	1	1	
71	500411	WASHER FL .260x.697x.050 SS		4	4	4	
72	502716	NUT HEX NYRT 1/4-20		4	4	4	
73	504243	CLIP ROD 1/4" L.H.		2	2	2	
74	504541	CLIP ROD 1/4" R.H.		4	4	4	
NS	504541	CLIP ROD 1/4" R.H.		2	2	2	
75	285751	RELEASE MECHANISM ROD To 5-8431		1	1	1	
75	288201	RELEASE MECHANISM ROD From 5-8432		1	1	1	
76	285752	HANDLE ROD To 5-8431		1	1	1	
76	288200	HANDLE ROD From 5-8432		1	1	1	
77	780430	CYLINDER LOCK ASSY W/2 KEYS / "CORBIN"		1	1	1	S
. NS	780562	. KEY / "CORBIN" BLANK		2	2	2	S
77	780803	CYLINDER LOCK ASSY W/2 KEYS / "SCHLAGE" SERVICE		1	1	1	
. NS	780902	. KEY / "SCHLAGE" BLANK		1	1	1	
NS	780562	KEY / "CORBIN" BLANK		1	1	1	
78	283468	WASHER FINISHING		1	1	1	
79	285198	GASKET		1	1	1	
80	285188	GASKET		1	1	1	
81	286704	SPACER / LOCK & NUT		1	1	1	
82	780427	NUT		1	1	1	
83	286626	LEVER, TRIANGULAR SHAPE / W/"CORBIN" 18MM OFFSET		1	1	1	
83	289029	LEVER, TRIANGULAR SHAPE / W/"SCHLAGE" 18MM OFFSET SERVICE		1	1	1	
84	N.S.P.	SCREW MA FL PH 22 (INCLUDE W/ITEM #77)		1	1	1	2
85	281714	HANDLE EXTERIOR / MODIFIED To 5-8431		1	1	1	F
85	780713	HANDLE EXTERIOR From 5-8432		1	1	1	
NS	288814	SPACER From 5-8432		1	1	1	
NS	500438	WASHER FL .187x.437x.050 Z050		1	1	1	
NS	500438	WASHER FL .187x.437x.050 Z050		1	1	1	
NS	507610	FOAM LOW EXPANSION		1	1	1	
86	780429	CLIP RETAINER To Y-7377		1	1	1	
86	780637	CLIP RETAINER From Y-7378		1	1	1	
87	285187	GASKET To 5-8413		1	1	1	
87	288815	GASKET From 5-8414		1	1	1	
88	065015	KEYBOARD ASSY To Y-7377		1	1	1	
88	065301	KEYBOARD ASSY From Y-7378		1	1	1	
88	069141	KEYBOARD REPLACEMENT KIT		1	1	1	SAV
. NS	069071	. HARNESS ENTRANCE DOOR KEYLESS SKIM		1	1	1	SAV
. NS	069164	. SUPPORT SKIM MODULE		1	1	1	SAV
. NS	069166	. HARNESS KEYLESS KEYPAD - CPC		1	1	1	SAV
. NS	502868	. SCREW TC TR PH #10-16x1/2 N500		2	2	2	SAV
. NS	502903	. SCREW TC FL PH #10-24x1 1/4 N500		3	3	3	SAV

From Y-7046 To 8-9339		Date:07/2024	PAGE:Y2-1862-50

ENTRANCE DOOR ASSY - MTH

Item#	Part	Description	XLII 45	XLII MTH40	XLII MTH45	XLII MTH45E	NOTES
. NS	504013	. TIE MOUNT / 1/4" X 1/4" I.D.		3	3	3	SAV
. NS	504637	. CABLE TIE / 3/16" x 13"		6	6	6	SAV
. NS	565914	. KEYPAD, DOOR LOCK W/CONNECTOR		1	1	1	SAV
. NS	565916	. MODULE INTERFACE KEYLESS SYSTEM		1	1	1	SAV
. NS	IS-13158	. SEE INSTRUCTION SHEET		1	1	1	SAV
. NS	FI-13158	. VOIR FEUILLE D'INSTRUCTION		1	1	1	SAV
NS	286224	SHIM From Y-7378		1	1	1	
88	065900	WATER DEFLECTOR / PLASTIC From 4-8262		1	1	1	C
89	064831	CABLE KEYLESS MODULE		1	1	1	
NS	504637	CABLE TIE / 3/16" x 13"		1	1	1	
NS	560503	CLAMP / 1/4" I.D.		1	1	1	
NS	500641	SCREW TP PAN PH #8x3/4 Z050		1	1	1	
90	284127	BUTTON		1	1	1	
91	780482	BEZEL		1	1	1	
92	283769	. DECAL / "LOCK"		1	1	1	
93	5001155	SCREW TP PAN PH #8X3/4 N050		1	1	1	
94	286480	PLUG SS 3/4" O.D. X M8-1.25		1	1	1	
95	286481	WASHER FL .354x1.02x 22GA SS		1	1	1	
96	502507	WASHER LO SPT 8.1x14.8x2.0 Z050		1	1	1	
97	286993	FLAP SEAL GLASS ASSY		1	1	1	
NS	286992	. FLAP SUPPORT		1	1	1	
98	286235	. FLAP SEAL 3/4" x 7/8" / PVC / 335MM To 2-7799		1	1	1	
98	288063	. FLAP SEAL / W/FLOCKING 37.6MM x 335MM From 2-7800		1	1	1	
99	286717	JOINT SUPPORT 345MM SS		1	1	1	
NS	500124	SCREW TP TR PH #8x1/2 SS		4	4	4	
100	287012	UPPER LOCK ASSY		1	1	1	
101	285271	. CATCH		1	1	1	
101	282383	. CATCH		1	1	1	
102	287011	. PLATE MOUNTING		1	1	1	
103	500560	. SCREW MA PAN PH M4-0.7x6 Z050		1	1	1	
NS	502636	. WASHER LO SPT 4.1x7.6x0.9 Z050		1	1	1	
104	641392	. CYLINDER 7/8" X 1" STROKE / DOUBLE ACTION To 4-8225		1	1	1	
104	641983	. CYLINDER 7/8" X 1" STROKE / DOUBLE ACTION From 4-8226		1	1	1	
105	641369	. MALE ELBOW 90° NON-SWIVEL / PUSH-IN FITTING / #4x1/8NPT-M BR		1	1	1	
106	641242	. MALE CONNECTOR / PUSH-IN FITTING / #4x1/8NPT-M BR		1	1	1	
NS	683276	. GREASE LOW TEMPERATURE 450GR		AR	AR	AR	
110	406050	DECAL / "C.W.A." & "T.C.A."			1	1	
110	157729	DECAL / WALL TO WALL TURNING DIAM 90' 3" WITH VIN #			1	1	
. NS	157730	. DECAL / WALL TO WALL TURNING DIAM 90' 3" W/OUT VIN RAW MATERIAL			1	1	
200	**Y2-1855-00**	**RUB RAIL - EXTERIOR CREST & TRIMS**					
NS	506769	TAPE RUB ADH2 CC POL 1/8" x 1/4" x 60' / BLACK H1CC-N-#14		AR	AR	AR	
NS	506790	TAPE RUB ADH2 CC POL 1/16" x 1/2" x 200' / BLACK I1C-N-A		AR	AR	AR	

From Y-7046 To 8-9339		Date:07/2024	PAGE:Y2-1862-50

ENTRANCE DOOR ASSY - MTH

Item#	Part	Description	XLII 45	XLII MTH40	XLII MTH45	XLII MTH45E	NOTES
NS	680065	TAPE COMPOUND / BLACK / 1/32" X 1" X 33' / L163-2400		AR	AR	AR	
NS	683097	CLEANER SIKA #205 / CLEAR / 1000ml		AR	AR	AR	
NS	683446	PRIMER SIKA #206 / BLACK / 1000ml		AR	AR	AR	
NS	683083	ADHESIVE SIKA #252 / BLACK / 600 ml SAUSAGE		AR	AR	AR	
NS	683288	ADHESIVE SIKA #255FC / BLACK / 600ml SAUSAGE		AR	AR	AR	
NS	683885	ADHESIVE SIKA TACK ULTRA FAST 2 / BLACK / 325ml		AR	AR	AR	
NS	288556	KIT, HANDLE EXTERIOR REPLACEMENT / MTH		1	1	1	
. NS	IS-03090	. SEE INSTRUCTION SHEET		1	1	1	
		A) FIXED ON STRUCTURAL FRAME					
		B) THOSE PANEL ARE FIXED WITH KIT 682444					
		C) FOR PRODUCT IMPROVEMENT USE THIS NEW DEFLECTOR UP TO 4-8261					
		F) FOR PRODUCT IMPROVEMENT, ASK KIT #288556					
		S) THIS MODEL IT OBSOLETED REPLACE BY 780803 WITH NEW LEVER # 289029					
		SAV) SERVICE ONLY					
		2) NOT SOLD BY PREVOST (SEE MANUFACTURING PART NUMBER AT END OF DESCRIPTION LINE)					
		P) CALL ORDER DESK FOR SPECIFIC APPLICATION (V.I.N.)					

From Y-7046 To 8-9339		Date:07/2024	PAGE:2810382
ACTUATOR SERVICE KIT			

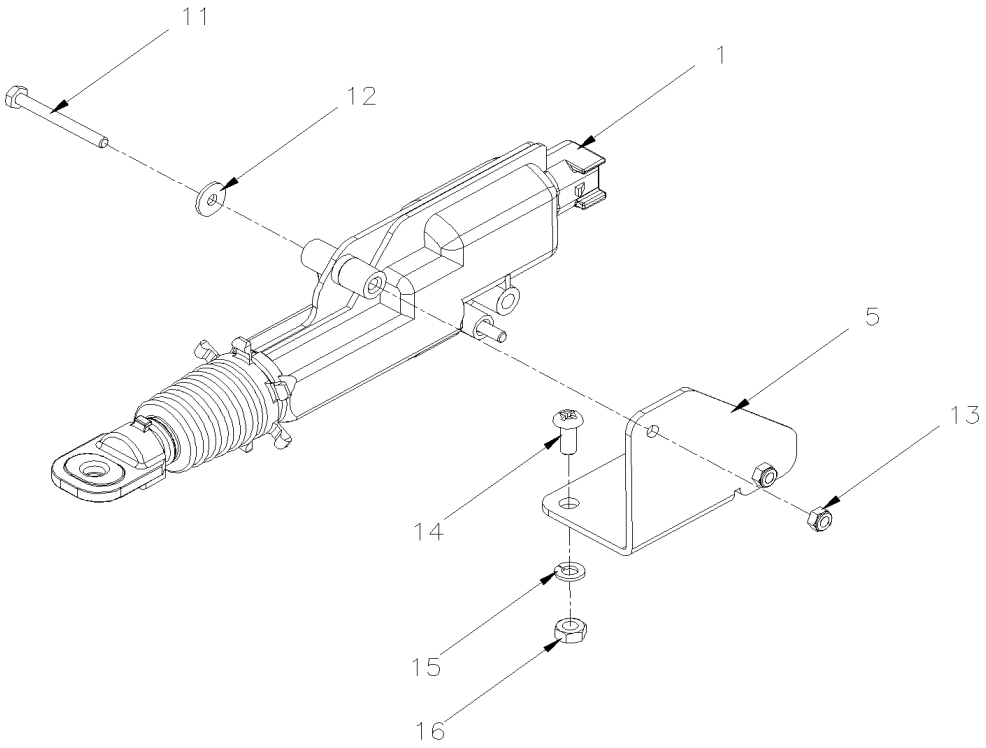

From Y-7046 To 8-9339		Date:07/2024	PAGE:2810382

ACTUATOR SERVICE KIT

Item#	Part	Description	XLII 45	XLII MTH40	XLII MTH45	XLII MTH45E	NOTES
1	2800049	LOCK ACTUATOR / 12V	1	1	1	1	
1	068011	CABLE INTERFACE DOOR LOCK ACTUATOR (780428 vs 2800049)	1	1	1	1	
5	2810380	SUPPORT	1	1	1	1	
11	5001100	SCREW CAP HEX M3-0.5x30 G8.8 ZP	2	2	2	2	
12	500437	WASHER FL .125x.375x.040 Z050	2	2	2	2	
13	5001408	NUT HEX STO M3-0.5 ZP	2	2	2	2	
14	5001036	SCREW MA PAN PH M4-0.7x10 Z050	2	2	2	2	
15	502524	NUT HEX M4-0.7 Z050	2	2	2	2	
16	502636	WASHER LO SPT 4.1x7.6x0.9 Z050	2	2	2	2	
NS	IS-19092	SEE INSTRUCTION SHEET	1	1	1	1	
NS	FI-19092	VOIR FEUILLE D'INSTRUCTION	1	1	1	1	

From Y-7046 To 8-9339		Date:07/2024	PAGE:Y2-1862-60
ENTRANCE DOOR FRAME - INSTALLATION			

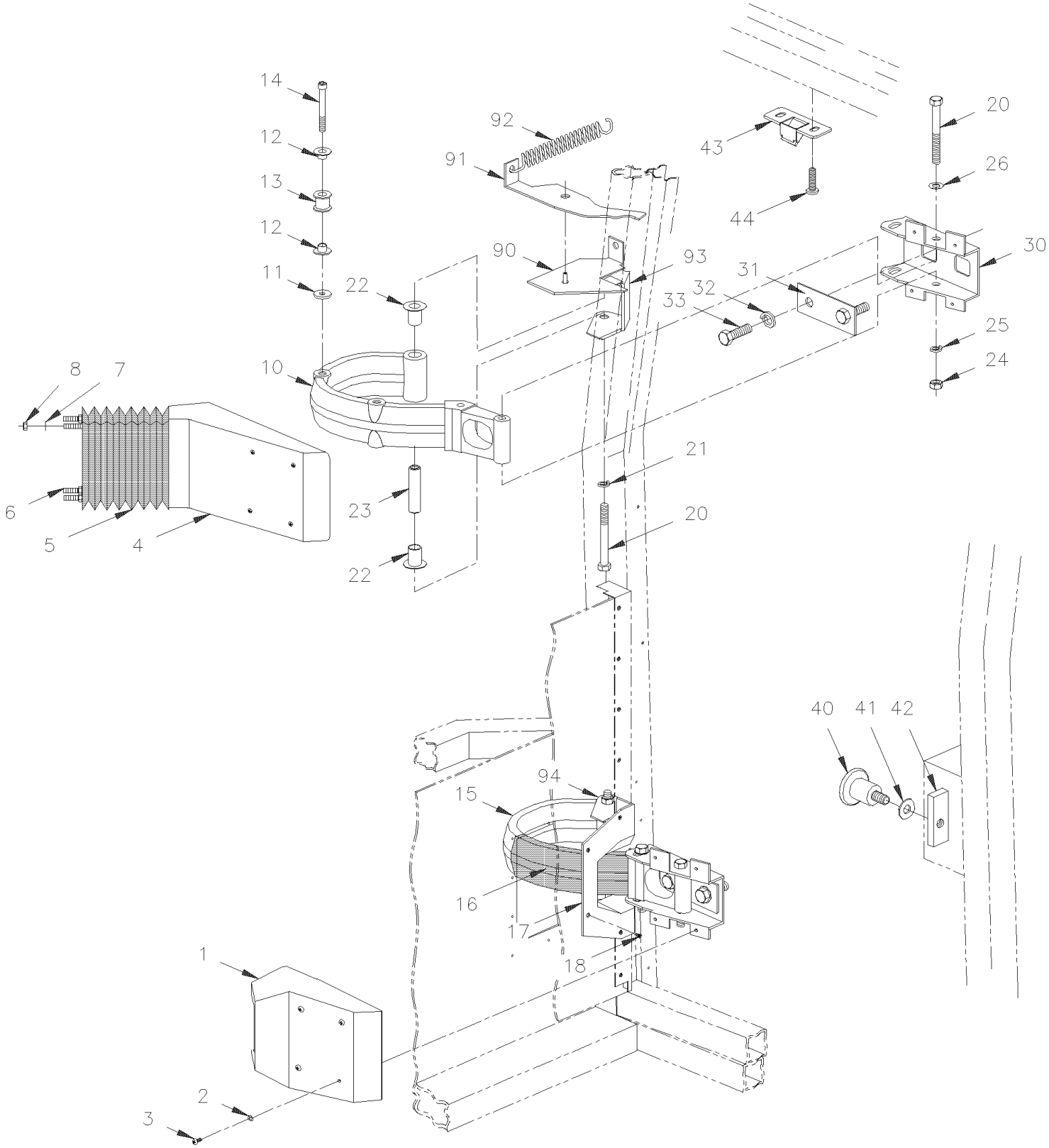

From Y-7046 To 8-9339		Date:07/2024	PAGE:Y2-1862-60

ENTRANCE DOOR FRAME - INSTALLATION

Item#	Part	Description	XLII 45	XLII MTH40	XLII MTH45	XLII MTH45E	NOTES
1	326604	CAP COVER LOWER	1	1	1	1	
2	500950	WASHER FL .187x.625x.094 RUB	8	8	8	8	
3	500409	SCREW TP PAN PH #8x1/2 BK	8	8	8	8	
4	326727	CAP COVER UPPER	1	1	1	1	
5	285492	BELLOWS / RUBBER	1	1	1	1	
6	285491	PLATE BELLOW RETAINER	2	2	2	2	
7	500964	WASHER FL .203x.500x.047 Z050	8	8	8	8	
8	502782	NUT HEX NYRT M5-0.8 Z050	8	8	8	8	
10	285937	HINGE UPPER To 2-7924	1				
10	287340	HINGE UPPER From 2-7925 To 4-8334	1				
10	287471	HINGE UPPER From 4-8335 To 6-8906	1				
10	284287	HINGE UPPER To 2-7874		1	1	1	
10	287339	HINGE UPPER From 2-7875 To 3-8074		1	1	1	
10	287404	HINGE UPPER From 3-8075 To 4-8334		1	1	1	
10	287472	HINGE UPPER From 4-8335		1	1	1	
11	282956	WASHER To 3-8074		1	1	1	
11	502638	WASHER FL .312x.734x.065 N500 From 3-8075		1	1	1	
12	507301	BUSHING NYLINER To 3-8074		2	2	2	
12	507628	BUSHING NYLINER From 3-8075		2	2	2	
13	284214	ROLLER SS 9.5MM I.D.x14.5 O.D. 19Flx17Th To 3-8074		1	1	1	
13	287405	ROLLER SS 11MM I.D.x14.5 O.D. 19Flx17Th From 3-8075		1	1	1	
14	5001108	SCREW SHR HEXS 5/16x3/4 {1/4-20 To 3-8074		1	1	1	
14	500876	SCREW SHR HEXS 3/8x3/4 {5/16-18 From 3-8075		1	1	1	
15	286477	HINGE To 2-7815	1	1	1	1	
15	287341	HINGE From 2-7816	1	1	1	1	
16	326228	COVER HINGE LOWER / PLASTIC	1	1	1	1	
17	326227	PANEL FINISHING LOWER	1	1	1	1	
20	5001016	SCREW CAP HEX M10-1.5x90 G8.8 Z050	2	2	2	2	
21	500257	WASHER LO SPT 10.2x18.1x2.2 Z050	2	2	2	2	
22	507326	BEARING FLANGE	2	2	2	2	
23	284285	SPACER / BEARING FLANGE To 2-7874	2	2	2	2	
23	287337	SPACER / BEARING FLANGE From 2-7875	2	2	2	2	
24	500256	NUT HEX M10-1.5 Z050	4	4	4	4	
25	502585	WASHER LO SERR 10.2x26.3x1.4 ZP	4	4	4	4	
26	500445	WASHER FL .437x1.000x.083 Z050	2	2	2	2	
30	284040	ATTACHMENT	2	2	2	2	
31	286998	SUPPORT PLATE 134MM X 48MM	2	2	2	2	
32	500810	WASHER LO SPT 12.2x21.1x2.5 Z050	4	4	4	4	
33	502731	SCREW CAP HEX M12-1.75x40 G8.8 Z050	4	4	4	4	
40	780189	STRIKER & SHIM	1	1	1	1	
41	500446	WASHER FL .531x1.250x.125 Z050	1	1	1	1	
42	285014	FIXING BLOCK	1	1	1	1	

From Y-7046 To 8-9339		Date:07/2024	PAGE:Y2-1862-60

ENTRANCE DOOR FRAME - INSTALLATION

Item#	Part	Description	XLII 45	XLII MTH40	XLII MTH45	XLII MTH45E	NOTES
43	287008	DOOR STOPPER ASSY	1	1	1	1	
44	502806	SCREW MA FL PH M6-1.0x10 Z050	2	2	2	2	
90	251022	LEVER AND SUPPORT ASSY (WELDED TO FRAME) To 2-7745		1	1	1	
90	251548	LEVER AND SUPPORT ASSY SS (WELDED TO FRAME) From 2-7746		1	1	1	
NS	504543	. RIVET SHR FL 3/8x3/16 STL		1	1	1	
91	212098	. DOOR STOPPER To 2-7745		1	1	1	
91	214664	. DOOR STOPPER From 2-7746		1	1	1	
92	502255	SPRING EXTENSION / .814 O.D. x 3.14 x .148		1	1	1	
93	251083	HINGE SUPPORT / UPPER		1	1	1	
94	251001	HINGE SUPPORT / LOWER	1	1	1	1	

From Y-7046 To 6-8906		Date:07/2024	PAGE:Y2-1862-80

ENTRANCE DOOR ASSY - W.C.L.

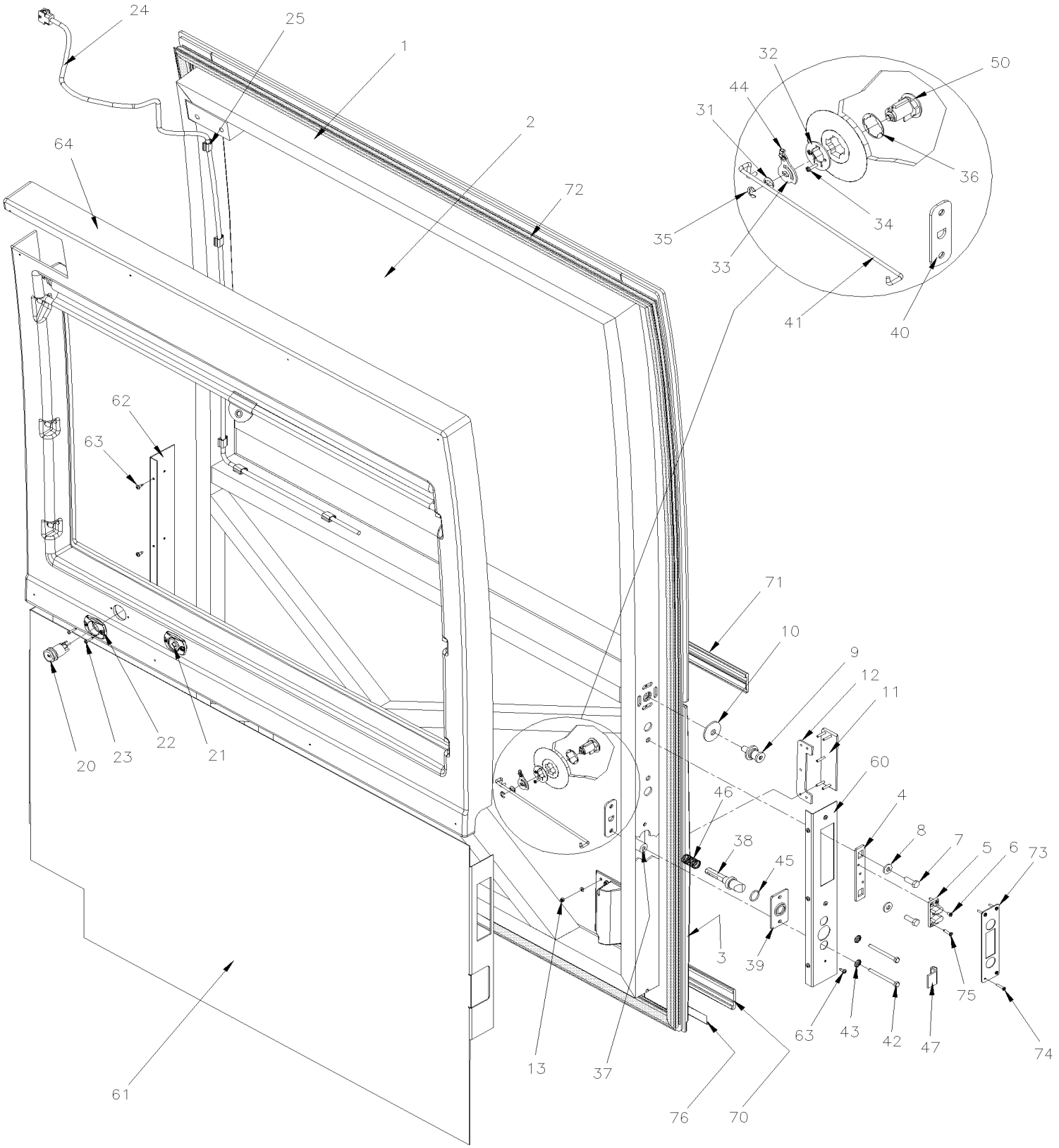

From Y-7046 To 6-8906		Date:07/2024	PAGE:Y2-1862-80

ENTRANCE DOOR ASSY - W.C.L.

Item#	Part	Description	XLII 45	XLII MTH40	XLII MTH45	XLII MTH45E	NOTES
	287003P	DOOR ASSY	1				
1	286743	. FRAME ASSY	1				
NS	287184	. INSULATOR PANEL UPPER	1				
NS	287185	. INSULATOR PANEL FOWARD	1				
NS	287186	. INSULATOR PANEL BACKWARD	1				
NS	287187	. INSULATOR PANEL LOWER	1				
NS	287188	. INSULATOR PANEL LOWER HINGE	1				
NS	680397	. CONTACT GLUE / AEROSOL 17oz	AR				
2	286988	. GLASS THERMOS 13%	1				
NS	507000	. TAPE RUB ADH2 POL 3/16" x 1/4" x 50' / BLACK V2206	AR				
NS	687957	. GLUE MS POLYMER TEROSON MS 9399 / 400ml CARTRIDGE	AR				
3	286989	. PANEL FIBERGLASS	1				
3	288887	. PANEL FIBERGLASS WITH "FORD" KEY	1				
3	282617	. PANEL FIBERGLASS WITH HANDLE	1				
NS	506236	. TAPE RUB ADH1 CC POL 1/16" x 1/2" x 100' / GREY 2520	AR				
NS	506648	. TAPE RUB ADH1 CC POL 1/8" x 1/2"x 50' / GREY 2542	AR				
NS	683480	. ADHESIVE SIKA #264 / BLACK / 310ml CARTRIDGE	AR				
NS	683481	. ACCELERATOR SIKA / 310ml CARTRIDGE	AR				
4	283929	. PLATE / TO FIX DOVETAIL	1				
5	780496	. DOVETAIL, MALE	1				
6	500371	. SCREW MA FL PH M4-0.7x8 N500	3				
7	502589	. SCREW CAP HEX M8-1.25x25 G8.8 Z050	2				
8	500321	. WASHER BEL SPR .331x.827x.098 N500	2				
9	780189	. STRIKER & SHIM	1				
10	284447	. WASHERS BELLEVILLE	11				
11	283956	. HANDLE ASSY / W/5 STUDS	1				
12	283954	. GASKET / HANDLE & BODY	1				
13	502557	. NUT HEX NYRT M4-0.7 SS	5				
13	502556	. WASHER FL 4.3x9.0x0.8 SS	5				
20	830158	. SWITCH / OFF-ON / S.P.S.T. / READING LIGHT	1				
21	830159	. SWITCH / OFF-M/ON / S.P.S.T. / CHIME	1				
22	409259	. PROTECTOR SWITCH / CAP	2				
. NS	288728	. . REINFORCMENT FOR SCREW PROTECTOR CAP	1				
23	500814	. SCREW TP BDG PH #6x3/4 BK	4				
24	065369	. CABLE HARNESS / READING LIGHT CURBSIDE DOOR / W/W.C.L.	1				
25	504536	. CABLE CLIP ½" / ADHESIVE	6				
30	289004	KIT RETROFIT, DOOR CYLINDER LOCK W/CATCH PIN To 8-9281	1				A
31	283853	. SPACER / WASHER 9/16" O.D. X 1/4" I.D. To 8-9281	1				
32	285811	. WASHER / CYLINDER LOCK RETAINER To 8-9281	1				
33	288839	. PIVOT LOCK ROD / W/W.C.L. DOOR To 8-9281	1				
34	500518	. SCREW MA BDG PH #4-40x1/2 Z050 To 8-9281	2				

From Y-7046 To 6-8906		Date:07/2024	PAGE:Y2-1862-80

ENTRANCE DOOR ASSY - W.C.L.

Item#	Part	Description	XLII 45	XLII MTH40	XLII MTH45	XLII MTH45E	NOTES
35	504402	. RING RETAINER / EXT .250 x .210 x .025" To 8-9281	1				
36	780237	. SEAL RUBBER 1/32" TH To 8-9281	1				
36	2800032	. SEAL RUBBER 1/16" TH To 8-9281	1				
37	288833	. SLEEVE 19MM O.D. x 7.5MM I.D. x 36MM To 8-9281	2				
38	288832	. CATCH PIN SS / 91MM To 8-9281	1				
38	289586	. CATCH PIN ACETAL / 91MM To 8-9281	1				
39	288831	. GUIDE PIN FRONT W/19MM I.D. To 8-9281	1				
40	288834	. GUIDE PIN INSIDE / W/D HOLE To 8-9281	1				
41	288837	. ROD OPENING 252.4MM To 8-9281	1				
42	5001667	. SCREW CAP HEX M6-1.0x70 BK To 8-9281	2				
43	500356	. WASHER LO SERR 6.1x16.0x0.9 N500 To 8-9281	2				
44	502724	. SCREW CAP HEX #10-32x1/4 BZC To 8-9281	1				
45	507212	. O-RING To 8-9281	1				
46	502910	. SPRING COMPRESSION / .720 O.D. 1.75 x .055 To 8-9281	1				
47	288890	. CATCH PIN RETAINER / (WELDED AT STRUCTURE) To 8-9281	1				
50		FOR CYLINDER KEY CODE SEE ITEM #13 AT PAGE / Y2-1867-00					B
50	**Y2-1867-00**	**KEY & CYLINDER CODE "FORD" & "NS"**					B
60	285990	FINISHING MOULDING FORWARD	1				F
60	287197	FINISHING MOULDING	1				T
61	287191P	FINISNING PANEL / TISSUS	1				
61	Call order desk	FINISHING PANEL / FORMICA	1				P
61	287182	PANEL ALUMINUM	1				
61	Call order desk	PANEL FORMICA	1				P
62	287946	FINISHING MOULDING BACKWARD	1				F
62	287197	FINISHING MOULDING	1				T
63	500952	SCREW TP BDG PH #8x1/2 SS	12				
64	287155	INTERIOR WINDOW MOULDING	1				
64	288726	INTERIOR WINDOW MOULDING	1				
. NS	288728	. REINFORCMENT FOR SCREW PROTECTOR CAP	2				
64	287154	INTERIOR WINDOW MOULDING	1				S
64	288725	INTERIOR WINDOW MOULDING	1				S
NS	500552	SCREW TP OV PH #6x3/4 Z050	9				
NS	500463	WASHER FN CKF .187x.500x.090 BR Z050	9				
NS	506191	TAPE RUB ADH1 CC POL 1/8" x 1/4" x 50' / GREY 2520X	AR				F
NS	405142	DECAL / BLACK STRIP W/DOTTED 1063MM x 149MM	1				S
70	474666	FINISHING MOULDING LOWER W.C.L. DOOR 1285MM	1				
. NS	506785	. TAPE RUB ADH2 CC POL 1/16" X 1/4" X 200' / BLACK I1C-N-A	AR				
. NS	506769	. TAPE RUB ADH2 CC POL 1/8" x 1/4" x 60' / BLACK H1CC-N-#14	AR				
71	474794	FINISHING MOULDING UPPER W.C.L. DOOR 1285MM	1				
. NS	506785	. TAPE RUB ADH2 CC POL 1/16" X 1/4" X 200' / BLACK I1C-N-A	AR				

From Y-7046 To 6-8906		Date:07/2024	PAGE:Y2-1862-80

ENTRANCE DOOR ASSY - W.C.L.

Item#	Part	Description	XLII 45	XLII MTH40	XLII MTH45	XLII MTH45E	NOTES
. NS	506790	. TAPE RUB ADH2 CC POL 1/16" x 1/2" x 200' / BLACK I1C-N-A	AR				
NS	682462	ADHESIVE SIKA #252 / BLACK / 310ml CARTRIDGE	1				
72	289937	RUBBER SEAL EXTRUSION / W.C.L. ENTRANCE DOOR	1				
72	288909	RUBBER SEAL EXTRUSION / W.C.L. ENTRANCE DOOR	1				
72	2800160	RUBBER SEAL EXTRUSION / W.C.L. ENTRANCE DOOR	1				
73	287208	FINISHING PLATE SS	1				
74	5001040	SCREW TC PAN PH #6-32x3/4 SS	4				
75	500260	SCREW TC FL PH #8-32x3/4 BK	2				
76	474799	DRIP MOULDING / 1285MM	1				
		A) FOR RETROFIT DEAD BOLT & "FORD" KEY ASK FOR KIT # 289004 INCLUD ALLS ITEMS IN GREEN					
		B) THIS CYLINDER LOCK ARE NOT INCLUDE IN KIT 289004 SEE YOU O.E.M. KEY CODE					
		C) WITH TRANSIT BUS ONLY					
		F) WITH FORMICA					
		S) WITH SUNSHINE ROLLER					
		T) WITH TISSUS					
		P) CALL ORDER DESK FOR SPECIFIC APPLICATION (V.I.N.)					

From Y-7046 To 6-8906		Date:07/2024	PAGE:Y2-1862-82
ENTRANCE DOOR - INSTALLATION - W.C.L.			

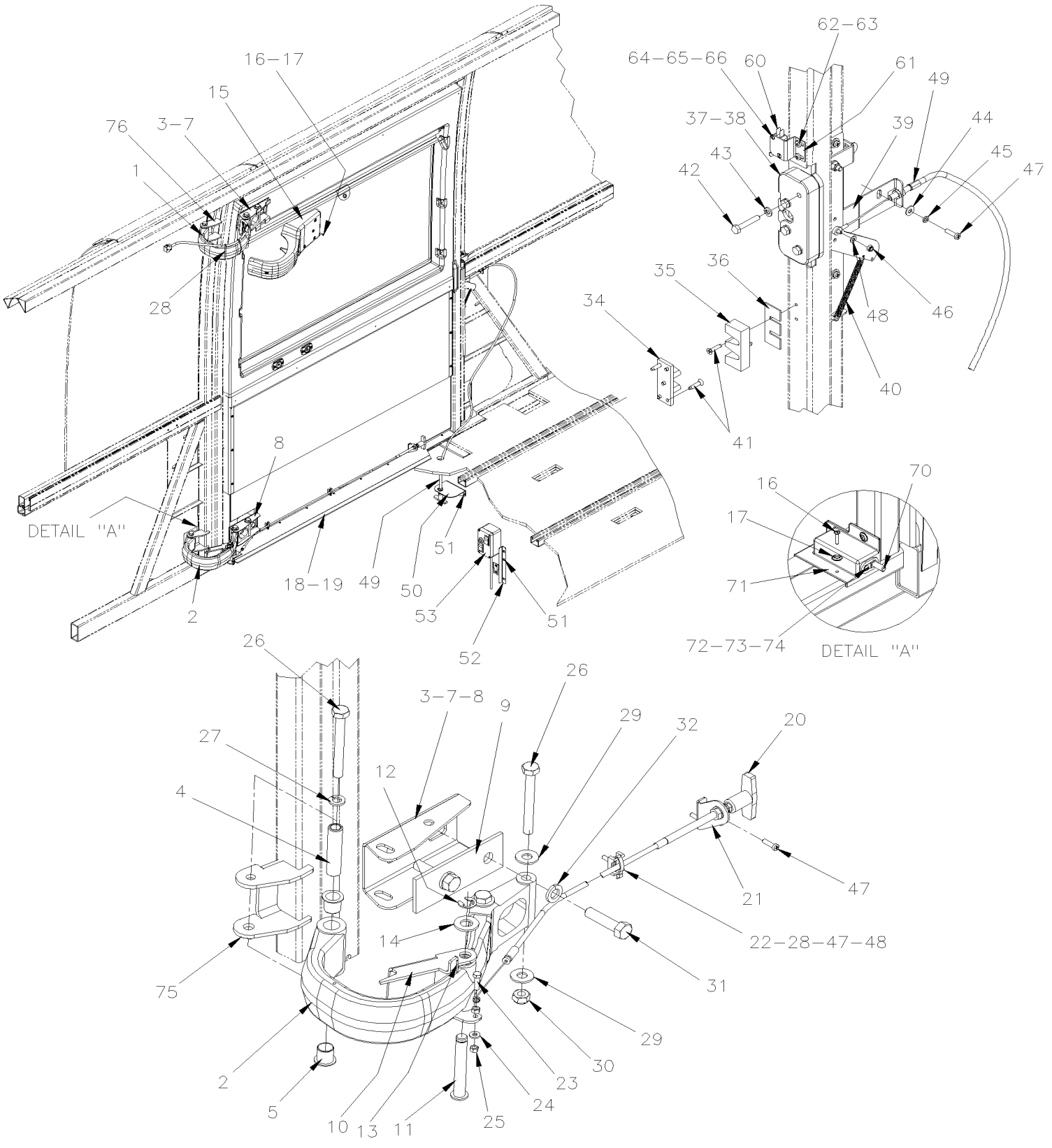

From Y-7046 To 6-8906		Date:07/2024	PAGE:Y2-1862-82

ENTRANCE DOOR - INSTALLATION - W.C.L.

Item#	Part	Description	XLII 45	XLII MTH40	XLII MTH45	XLII MTH45E	NOTES
1	284287	HINGE UPPER To 2-7874	1				
1	287339	HINGE UPPER From 2-7875 To 3-8074	1				
1	287404	HINGE UPPER From 3-8075 To 3-8334	1				
1	287472	HINGE UPPER From 3-8335	1				
2	287924	HINGE LOWER To 2-7874	1				
2	287338	HINGE LOWER From 2-7875	1				
3	287948	RUBBER PAD 110MM X 75MM	1				B
4	287337	SPACER / BEARING FLANGE	2				
5	507326	BEARING FLANGE	4				
NS	680739	GREASE SYNTHETIC / RED 20KG	AR				
7	287151	ATTACHMENT UPPER HINGE	1				
8	287152	ATTACHMENT LOWER HINGE	1				
9	286998	SUPPORT PLATE 134MM X 48MM	2				
10	287179	LEVER LOCK	1				
11	287180	PIVOT	1				
12	507110	RING RETAINER / EXT .500 x .392 x .042" / SS	1				
13	371135	SPRING, TORSION / .562 I.D. x .061	1				
14	500958	WASHER FL .531x1.062x.095 SS	1				
15	287160	CAP COVER UPPER	1				
16	500552	SCREW TP OV PH #6x3/4 Z050	5				
17	500463	WASHER FN CKF .187x.500x.090 BR Z050	5				
18	287193	DOORSTEP W.C.L. To 5-8605	1				
18	288623	DOORSTEP W.C.L. From 5-8606	1				
19	504340	RIVET POP DOME OE 1/8x3/16 SS	9				
20	780635	CABLE DOOR SAFETY UNLATCH To 3-8114	1				
20	287456	CABLE DOOR SAFETY UNLATCH From 3-8115 To 4-8278	1				
20	287470	CABLE DOOR SAFETY UNLATCH From 4-8279	1				
21	287196	SUPPORT CABLE	1				
22	504013	TIE MOUNT / 1/4" X 1/4" I.D.	2				
23	5001146	SCREW CAP HEX M5-0.8x20 SS BK	1				
24	5001449	NUT HEX M5-0.8 SS	2				
25	502570	WASHER LO SPT 6.1x11.8x1.6 SS	1				
NS	680038	THREAD LOCKER LOCTITE #243 / BLUE / 50ml	1				
26	5001016	SCREW CAP HEX M10-1.5x90 G8.8 Z050	6				
27	500257	WASHER LO SPT 10.2x18.1x2.2 Z050	2				
28	504637	CABLE TIE / 3/16" x 13"	AR				
29	500445	WASHER FL .437x1.000x.083 Z050	8				
30	502617	NUT HEX NYRT M10-1.5 Z050	4				
31	5001519	SCREW CAP HEX M12-1.75x50 G8.8 FT ZP	4				
32	500482	WASHER LO SPT .506x.873x.125 Z050	4				
34	780496	DOVETAIL, MALE	1				
35	780497	DOVETAIL, FEMALE / FIXED ON STRUCTURE	1				

From Y-7046 To 6-8906		Date:07/2024	PAGE:Y2-1862-82

ENTRANCE DOOR - INSTALLATION - W.C.L.

Item#	Part	Description	XLII 45	XLII MTH40	XLII MTH45	XLII MTH45E	NOTES
36	287209	SHIM 16GA	2				
37	287173	LATCH ASSY	1				
38	287645	SHIM LATCH SS 16 GA	AR				
39	287171	TRANSFER LEVER To 3-8114	1				A
39	289242	TRANSFER LEVER From 3-8115	1				S
40	502092	. SPRING EXTENSION / .240 O.D. x 2.5 x .034	1				
41	500260	SCREW TC FL PH #8-32x3/4 BK	2				
42	502818	SCREW CAP HEX M6-1.0x35 G8.8 Z050	4				
43	502570	WASHER LO SPT 6.1x11.8x1.6 SS	4				
44	500964	WASHER FL .203x.500x.047 Z050	3				
45	500470	WASHER LO SPT .193x.334x.047 Z050	3				
46	500590	NUT HEX NYRT M4-0.7 Z050	1				
47	500658	SCREW TC PAN PH #10-24x3/4 Z050	7				
48	500591	WASHER FL 4.3x9.0x0.8 Z050	3				
49	780636	CABLE DOOR LATCH To 3-8114	1				
49	287455	CABLE DOOR LATCH From 3-8115 To 4-8278	1				
49	287469	CABLE DOOR LATCH From 4-8279	1				
50	287174	SUPPORT CABLE	1				
51	504379	RIVET POP DOME OE 3/16x1/4 SS	AR				
52	363896	ANGLE GUIDE REMOTE CONTROL	1				
53	**Y2-2380-05**	**W.C.L. "RICON" MODEL "F9A" To 1-7680**					
53	**Y2-2380-06**	**W.C.L. "RICON" MODEL "HC-L002" From 1-7681 To 4-8278**					
53	**Y2-2380-07**	**W.C.L. "RICON" REMOVABLE MODEL "F9T" From 4-8279 To 5-8605**					
53	**Y2-2380-08**	**W.C.L. "RICON" REMOVABLE MODEL "F9TF" From 5-8606**					
60	562096	MICRO SWITCH	1				
61	065388	SUPPORT / SWITCH	1				
62	5001491	SCREW TC PAN PH #8-32x3/4 SS	2				
63	500581	WASHER LO SPT .141x.250x.031 SS	2				
64	502519	SCREW MA FL SLT #4-40x5/8 Z050	2				
65	5001407	WASHER LO EXT 3.2x6.0x0.4 SS	2				
66	502520	NUT HEX #4-40 Z050	2				
70	562303	SWITCH / S.P.S.T. / N.C.	1				
71	065444	SWITCH SUPPORT / ENTRANCE DOOR W.C.L.	1				
72	500148	SCREW MA RND PH #6-32x1/2 SS	1				
73	502649	WASHER LO EXT .141x.320x.022 Z050	1				
74	500553	NUT HEX #6-32 SS	1				
75	287897	HINGE SUPPORT / LOWER	1				
76	287898	HINGE SUPPORT / UPPER	1				
80	287217	KIT, CABLE DOOR LATCH W.C.L. To 4-8278	1				
. NS	IS-03051	. SEE INSTRUCTION SHEET To 4-8278	1				
81	287407	KIT, CABLE DOOR SAFETY LATCH W.C.L. To 4-8278	1				

From Y-7046 To 6-8906		Date:07/2024	PAGE:Y2-1862-82

ENTRANCE DOOR - INSTALLATION - W.C.L.

Item#	Part	Description	XLII 45	XLII MTH40	XLII MTH45	XLII MTH45E	NOTES
. NS	IS-03051	. SEE INSTRUCTION SHEET To 4-8278	1				
82	287427	KIT WCL DOOR To 3-8114	1				
. NS	IS-02048A	. SEE INSTRUCTION SHEET To 3-8114	1				
		A) FOR PRODUCT IMPROVEMENT ASK KIT #287427 Up to 3-8114					
		B) FIXED ON GLASS WINDOW IN LINE WITH UPPER HINGE					
		S) AS SHOWN					

From Y-7046 To 6-8906		Date:07/2024	PAGE:Y2-1863-00
CONDENSOR DOOR ASSY - BUS			

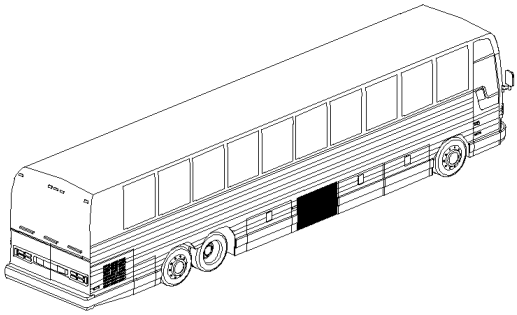

BUS 45'

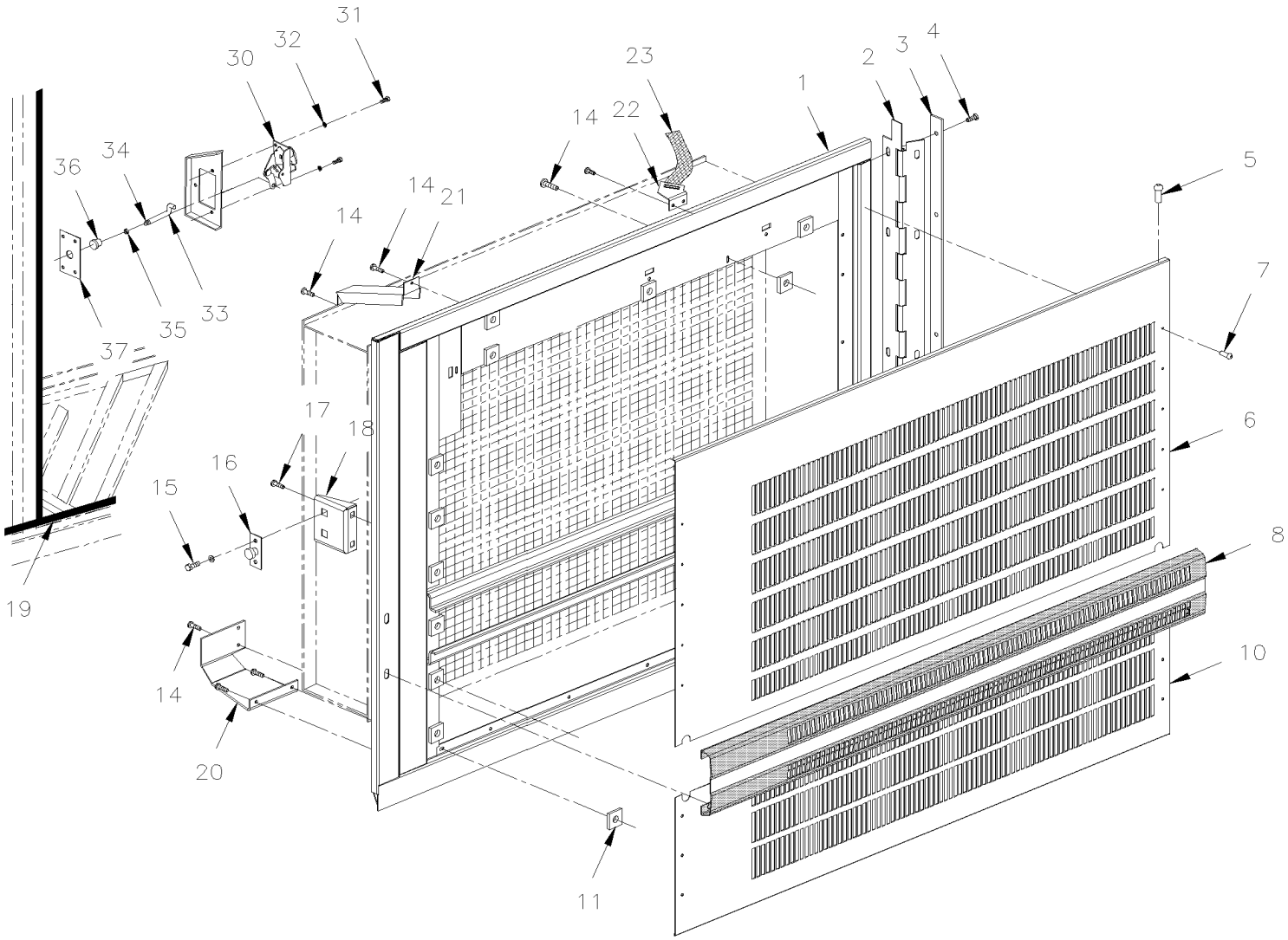

From Y-7046 To 6-8906		Date:07/2024	PAGE:Y2-1863-00

CONDENSOR DOOR ASSY - BUS

Item#	Part	Description	XLII 45	XLII MTH40	XLII MTH45	XLII MTH45E	NOTES
		ALL DOORS ASSY DO NOT INCLUDE					
		RUB-RAIL PLEASE ORDER SEPARATELY					
	483651	CONDENSOR DOOR ASSY / W/FLAT PANEL	1				
	483658	CONDENSOR DOOR ASSY / W/FLUTED	1				A
1	483015	. FRAME ASSY / 1354MM To 2-7753	1				F
1	483102	. FRAME ASSY / 1354MM From 2-7754 To 5-8358	1				
1	483814	. FRAME ASSY / 1354MM From 5-8359	1				
NS	481047	. HINGE PLATE 31"1/16 W/ 5 HOLES 1/4-28 To 2-7831	1				B
NS	483638	. HINGE PLATE 31"1/16 W/ 5 HOLES 1/4-28 From 2-7832	1				B
2	480907	. HINGE	1				
3	480910	. REINFORCEMENT OF HINGE / THIN 31 1/4" x 1/8 FRAME SIDE	1				
NS	481840	. REINFORCEMENT OF HINGE / 31 7/8" X GA11 STRUCTURE SIDE	1				
NS	481131	. SHIM 2" X 1"1/8 / HINGE SUPPORT	AR				
4	500316	. SCREW MA FL PH 1/4-28x3/4 SS	5				
5	504340	. RIVET POP DOME OE 1/8x3/16 SS	AR				
6	483147	. PANEL, UPPER / FLAT To 2-7753	1				
6	483543	. PANEL, UPPER / FLAT From 2-7754 To 5-8358	1				
6	483805	. PANEL, UPPER / FLAT From 5-8359	1				
6	483331	. PANEL, UPPER / WFLUTED / S.B. To 5-8358	1				A
6	483804	. PANEL, UPPER / WFLUTED / S.B. From 5-8359	1				A
NS	680025	. CAULKING STRIP 3/16" O.D. X 14'	AR				
NS	680065	. TAPE COMPOUND / BLACK / 1/32" X 1" X 33' / L163-2400	AR				
7	504272	. RIVET CHY Q BRAZ 3/16x1/8 SS	AR				
8	**Y2-1855-00**	**RUB RAIL - EXTERIOR CREST & TRIMS**					
10	483245	. PANEL, LOWER	1				
10	483332	. PANEL, LOWER / S.B.	1				A
11	481249	. NUT To 2-7753	AR				
14	500524	. SCREW TP PAN PH #12x5/8 SS To 2-7753	AR				
NS	5001181	. SCREW CAP HEX M6-1.0x12 SS From 2-7754	AR				
NS	500411	. WASHER FL .260x.697x.050 SS From 2-7754	AR				
15	500316	. SCREW MA FL PH 1/4-28x3/4 SS	2				
NS	502582	. WASHER LO SERR 6.1x16.2x0.9 Z050	2				
NS	500692	. NUT HEX 1/4-28 Z050	2				
16	780278	. PIN, STRIKER STUD	1				
NS	283326	. STRIKER PLATE, MOUNTING / 60MM X 25MM	1				
17	500163	. SCREW CAP HEX 1/4-20x3/4 G5 Z050	2				
17	502583	. WASHER LO SERR 8.15x22.3x1.0 Z050	2				
18	284605	. SUPPORT / TO FIX CATCH	1				
19	482099	. WEATHERSTRIP / CONDENSOR DOOR	1				
19	480009	. WEATHERSTRIP / CONDENSOR DOOR	1				

From Y-7046 To 6-8906		Date:07/2024	PAGE:Y2-1863-00

CONDENSOR DOOR ASSY - BUS

Item#	Part	Description	XLII 45	XLII MTH40	XLII MTH45	XLII MTH45E	NOTES
NS	280152	. . WEATHERSTRIP RUBBER EPDM CC EXTRUSION / RAW MATERIAL	AR				
20	482322	SUPPORT	1				
21	**Y2-2255-00**	**CONDENSOR - INSTALLATION LARGE SYSTEM**					
22	452813	SUPPORT STRAP RETAINER W/2 SLOTS & 2 HOLES To 2-7753	1				
23	505507	STRAP NYLON 1" WIDE / S.L. To 2-7878	AR				
NS	452816	SUPPORT STRAP To 2-7878	1				C
NS	284439	PLATE, STRAP RETAINING / OBLONG 16.5MM x 25.4MM W/2 HOLES To 2-7878	1				
30	780282	LOCK SPAGNOLET L.H. To 2-7755	1				
30	780652	LOCK SPAGNOLET L.H. / W/G-FITTING From 2-7756	1				
. NS	780340	. CLIP, RETAINER ROD From 2-7756	1				
. NS	507607	. GREASE FITTING / M6-1.00 From 2-7756	1				
NS	505213	SHIM 1/16" THICK	AR				
NS	505193	SHIM 1/8" THICK	AR				
31	955271	SCREW CAP HEX M6-1.0x16 G8.8 ZG603	2				
32	502582	WASHER LO SERR 6.1x16.2x0.9 Z050	2				
33	284596	ROD OPENING 68MM	1				
34	500764	NUT HEX #8-32 Z050	1				
35	504083	SNAP BUSHING / .250x.468.406	1				
36	505504	KNOB, PULL / 8-32	1				
37	482726	CLOSING PLATE 30MM X 50MM / SS	1				
NS	504473	RIVET POP DOME OE 1/8x1/4 SS	4				
NS	483536	KIT RETROFIT, CONDENSER DOOR To 2-7753	1				
. NS	IS-01061	. SEE INSTRUCTION SHEET To 2-7753	1				
		A) USE WITH BUS WITH FLUTED LOWER PANELLING					
		B) INSIDE OF DOOR FRAME PANEL					
		C) FIXED UNDER PASSENGER FLOOR					
		F) FOR PRODUCT IMPROVEMENT, ASK KIT 483536					

From Y-7046 To 8-9339		Date:07/2024	PAGE:Y2-1863-50
CONDENSOR DOOR ASSY			

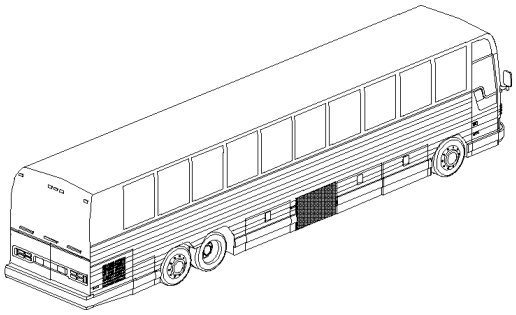

MTH 45'

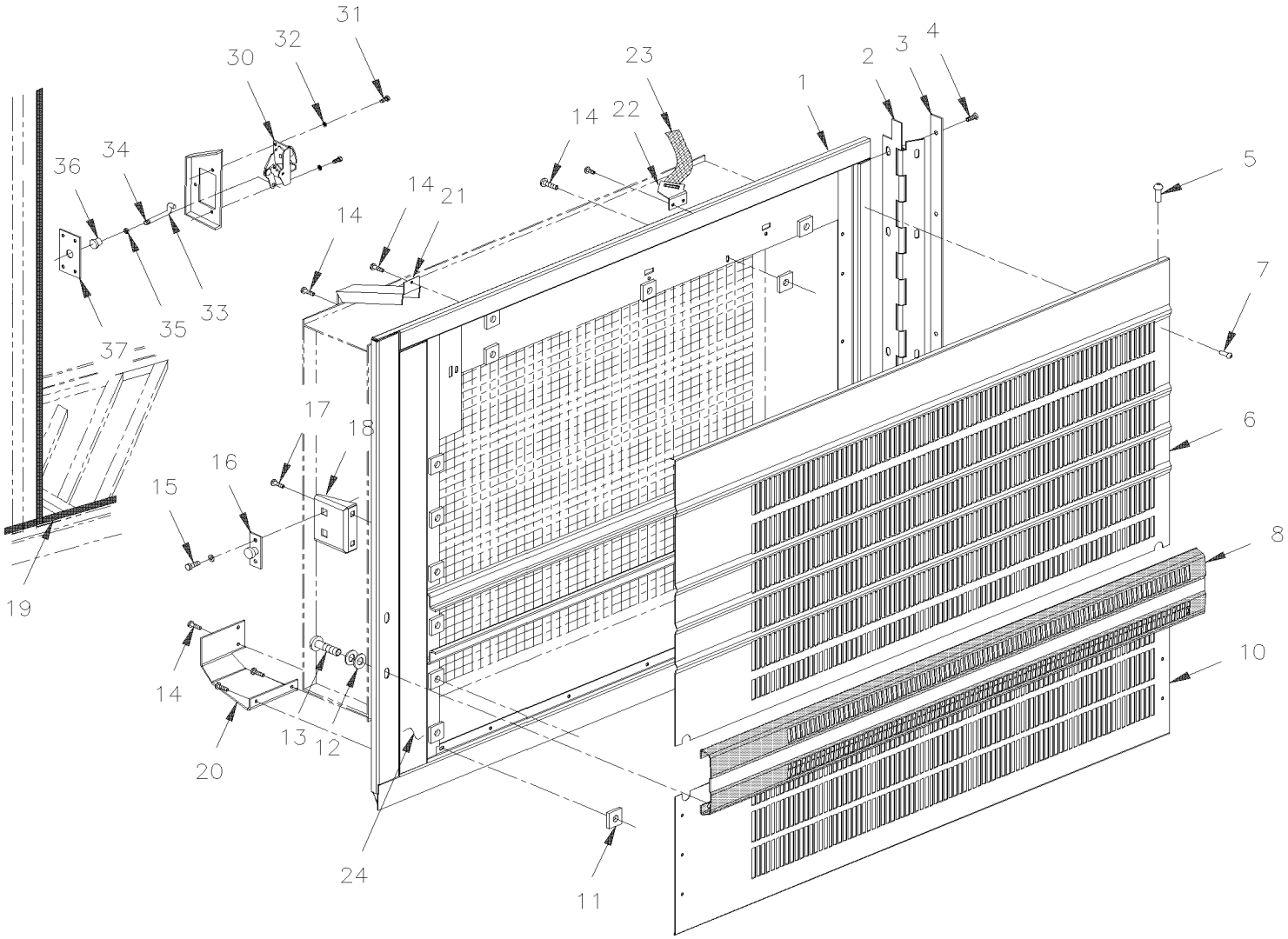

From Y-7046 To 8-9339		Date:07/2024	PAGE:Y2-1863-50

CONDENSOR DOOR ASSY

Item#	Part	Description	XLII 45	XLII MTH40	XLII MTH45	XLII MTH45E	NOTES
		ALL DOORS ASSY DO NOT INCLUDE					
		RUB-RAIL PLEASE ORDER SEPARATELY					
	453321P	CONDENSOR DOOR ASSY W/1 MOTOR			1		
1	482668	. FRAME ASSY			1		
NS	481047	. HINGE PLATE 31"1/16 W/ 5 HOLES 1/4-28 To 2-7831			1		A
NS	483638	. HINGE PLATE 31"1/16 W/ 5 HOLES 1/4-28 From 2-7832			1		A
2	480907	. HINGE			1		
3	480910	. REINFORCEMENT OF HINGE / THIN 31 1/4" x 1/8 FRAME SIDE			1		
NS	481840	. REINFORCEMENT OF HINGE / 31 7/8" X GA11 STRUCTURE SIDE			1		
NS	481131	. SHIM 2" X 1"1/8 / HINGE SUPPORT			AR		
4	500316	. SCREW MA FL PH 1/4-28x3/4 SS			5		
5	504340	. RIVET POP DOME OE 1/8x3/16 SS			AR		
6	482670	. PANEL, UPPER / S.B. To 5-8358			1		
6	483800	. PANEL, UPPER / S.B. From 5-8359 To 5-8468			1		
6	483900	. PANEL, UPPER / B.A. From 5-8469			1		
NS	680025	. CAULKING STRIP 3/16" O.D. X 14'			AR		
NS	680065	. TAPE COMPOUND / BLACK / 1/32" X 1" X 33' / L163-2400			AR		
7	504272	. RIVET CHY Q BRAZ 3/16x1/8 SS			AR		
8	**Y2-1855-00**	**RUB RAIL - EXTERIOR CREST & TRIMS**					
10	482669	. PANEL, LOWER / S.B. To 5-8468			1		
10	483896	. PANEL, LOWER / B.A. From 5-8469			1		
11	481249	. NUT			AR		
12	500411	. WASHER FL .260x.697x.050 SS			4		
NS	500473	. WASHER LO SPT .262x.489x.062 Z050			4		
13	500556	. SCREW MA TR PH 1/4-20x3/4 SS			4		
14	500524	. SCREW TP PAN PH #12x5/8 SS			AR		
15	500316	. SCREW MA FL PH 1/4-28x3/4 SS			2		
NS	502582	. WASHER LO SERR 6.1x16.2x0.9 Z050			2		
NS	500692	. NUT HEX 1/4-28 Z050			2		
16	780278	. PIN, STRIKER STUD			1		
NS	283326	. STRIKER PLATE, MOUNTING / 60MM X 25MM			1		
17	500163	. SCREW CAP HEX 1/4-20x3/4 G5 Z050			2		
17	502583	. WASHER LO SERR 8.15x22.3x1.0 Z050			2		
18	284605	. SUPPORT / TO FIX CATCH			1		
19	482099	WEATHERSTRIP / CONDENSOR DOOR			1		
NS	480009	WEATHERSTRIP / CONDENSOR DOOR			1		
NS	280152	. WEATHERSTRIP RUBBER EPDM CC EXTRUSION / RAW MATERIAL			AR		
20	482452	SUPPORT			1		
NS	482328	BLOCK SUPPORT			1		
NS	481055	SHIM / FOR THE BLOCK			1		

From Y-7046 To 8-9339		Date:07/2024	PAGE:Y2-1863-50

CONDENSOR DOOR ASSY

Item#	Part	Description	XLII 45	XLII MTH40	XLII MTH45	XLII MTH45E	NOTES
21	**Y2-2255-50**	**CONDENSOR - INSTALLATION LARGE SYSTEM**					
22	452813	SUPPORT STRAP RETAINER W/2 SLOTS & 2 HOLES			1		
23	505507	STRAP NYLON 1" WIDE / S.L.			AR		
NS	452816	SUPPORT STRAP			1		
24	482125	REINFORCEMENT, VERTICAL			1		
30	780282	LOCK SPAGNOLET L.H.			1		
NS	505213	SHIM 1/16" THICK			AR		
NS	505193	SHIM 1/8" THICK			AR		
31	502531	SCREW CAP HEX M6-1.0x16 G8.8 Z050			2		
32	502582	WASHER LO SERR 6.1x16.2x0.9 Z050			2		
33	284596	ROD OPENING 68MM			1		
34	500764	NUT HEX #8-32 Z050			1		
35	504083	SNAP BUSHING / .250x.468.406			1		
36	505504	KNOB, PULL / 8-32			1		
37	482726	CLOSING PLATE 30MM X 50MM / SS			1		
NS	504473	RIVET POP DOME OE 1/8x1/4 SS			4		
		A) A L'INTERIEUR DU CHASSIS DE LA PORTE					

From Y-7046 To 8-9278		Date:07/2024	PAGE:Y2-1863-51
CONDENSOR DOOR ASSY			

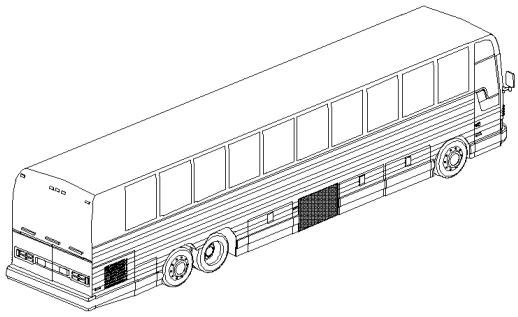

MTH 40' & 45' ENT

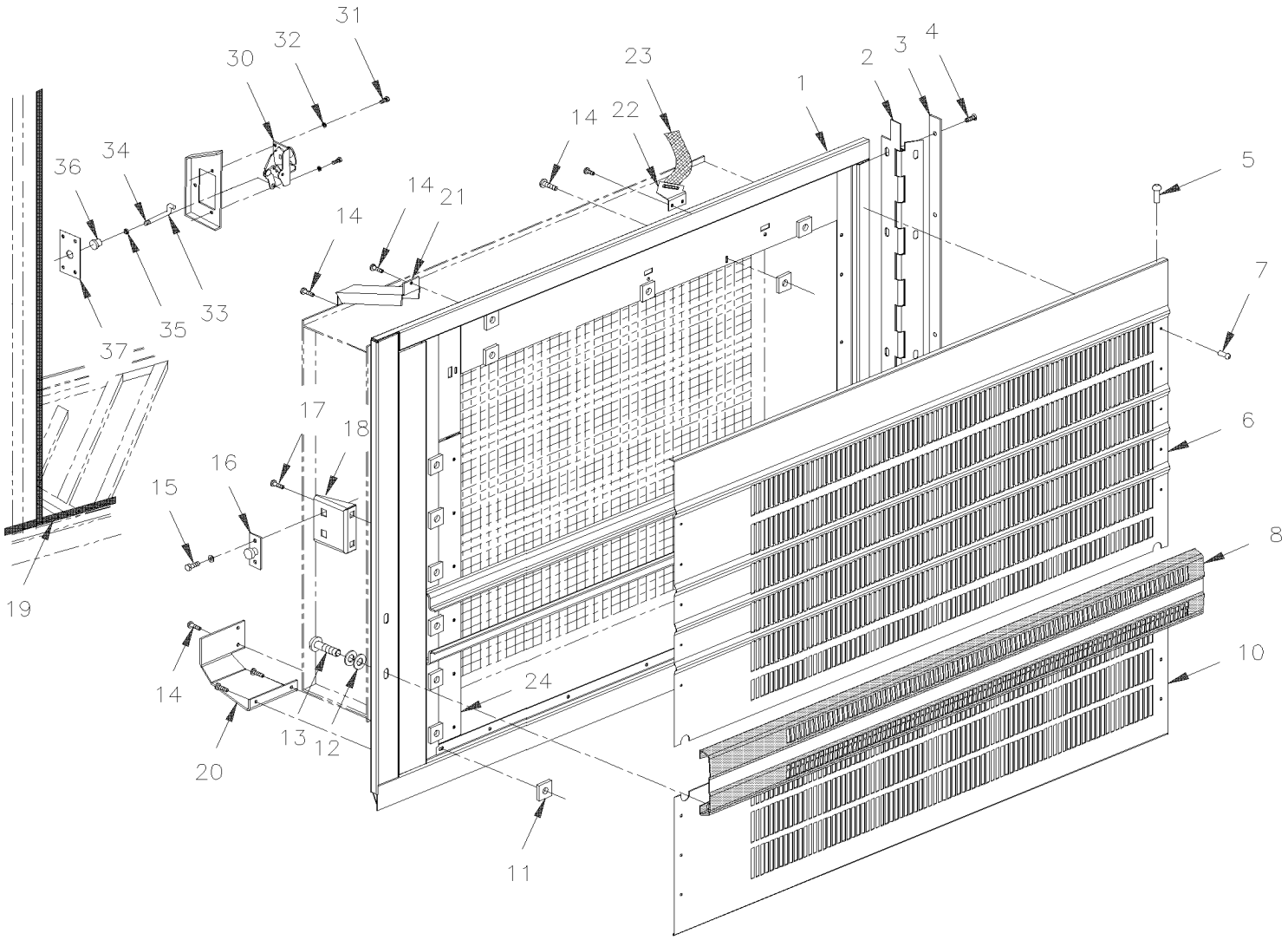

From Y-7046 To 8-9278		Date:07/2024	PAGE:Y2-1863-51

CONDENSOR DOOR ASSY

Item#	Part	Description	XLII 45	XLII MTH40	XLII MTH45	XLII MTH45E	NOTES
		ALL DOORS ASSY DO NOT INCLUDE					
		RUB-RAIL PLEASE ORDER SEPARATELY					
	483008P	CONDENSOR DOOR ASSY W/ 1 MOTOR		1		1	
1	483014	. FRAME ASSY To 5-8358		1		1	
1	483816	. FRAME ASSY From 5-8359		1		1	
NS	481047	. HINGE PLATE 31"1/16 W/ 5 HOLES 1/4-28 To 2-7831		1		1	A
NS	483638	. HINGE PLATE 31"1/16 W/ 5 HOLES 1/4-28 From 2-7832		1		1	A
2	480907	. HINGE		1		1	
3	480910	. REINFORCEMENT OF HINGE / THIN 31 1/4" x 1/8 FRAME SIDE		1		1	
NS	481840	. REINFORCEMENT OF HINGE / 31 7/8" X GA11 STRUCTURE SIDE		1		1	
NS	481131	. SHIM 2" X 1"1/8 / HINGE SUPPORT		AR		AR	
4	500316	. SCREW MA FL PH 1/4-28x3/4 SS		5		5	
5	504340	. RIVET POP DOME OE 1/8x3/16 SS		4		4	
6	483006	. PANEL, UPPER / S.B. To 5-8358		1		1	
6	483803	. PANEL, UPPER / S.B. From 5-8359 To 5-8468		1		1	
6	483899	. PANEL, UPPER / B.A. From 5-8469		1		1	
NS	680025	. CAULKING STRIP 3/16" O.D. X 14'		AR		AR	
NS	680065	. TAPE COMPOUND / BLACK / 1/32" X 1" X 33' / L163-2400		AR		AR	
7	504272	. RIVET CHY Q BRAZ 3/16x1/8 SS		17		17	
8	**Y2-1855-00**	**. RUB RAIL - EXTERIOR CREST & TRIMS**					
10	483007	. LOWER PANEL W/0.81 SQF PERFORATED AREA / S.B. To 5-8468		1		1	
10	483940	. LOWER PANEL W/0.81 SQF PERFORATED AREA / B.A. From 5-8469		1		1	
11	481249	. NUT		25		25	
12	500411	. WASHER FL .260x.697x.050 SS		4		4	
NS	500473	. WASHER LO SPT .262x.489x.062 Z050		4		4	
13	500556	. SCREW MA TR PH 1/4-20x3/4 SS		4		4	
14	500524	. SCREW TP PAN PH #12x5/8 SS		AR		AR	
15	500316	. SCREW MA FL PH 1/4-28x3/4 SS		2		2	
NS	502582	. WASHER LO SERR 6.1x16.2x0.9 Z050		2		2	
NS	500692	. NUT HEX 1/4-28 Z050		2		2	
16	780278	. PIN, STRIKER STUD		1		1	
NS	283326	. STRIKER PLATE, MOUNTING / 60MM X 25MM		1		1	
17	500163	. SCREW CAP HEX 1/4-20x3/4 G5 Z050		2		2	
17	502583	. WASHER LO SERR 8.15x22.3x1.0 Z050		2		2	
18	284605	. SUPPORT / TO FIX CATCH		1		1	
19	482099	WEATHERSTRIP / CONDENSOR DOOR		1		1	
19	480009	WEATHERSTRIP / CONDENSOR DOOR		1		1	
19	280152	. WEATHERSTRIP RUBBER EPDM CC EXTRUSION / RAW MATERIAL		AR		AR	
20	482452	SUPPORT		1		1	
21	**Y2-2255-50**	**CONDENSOR - INSTALLATION LARGE SYSTEM**					

From Y-7046 To 8-9278		Date:07/2024	PAGE:Y2-1863-51

CONDENSOR DOOR ASSY

Item#	Part	Description	XLII 45	XLII MTH40	XLII MTH45	XLII MTH45E	NOTES
22	452813	SUPPORT STRAP RETAINER W/2 SLOTS & 2 HOLES		1		1	
23	505507	STRAP NYLON 1" WIDE / S.L.		AR		AR	
24	482366	REINFORCEMENT, VERTICAL		1		1	
30	780282	LOCK SPAGNOLET L.H.		1		1	
NS	505213	SHIM 1/16" THICK		AR		AR	
NS	505193	SHIM 1/8" THICK		AR		AR	
31	502531	SCREW CAP HEX M6-1.0x16 G8.8 Z050		2		2	
32	502582	WASHER LO SERR 6.1x16.2x0.9 Z050		2		2	
33	284596	ROD OPENING 68MM		1		1	
34	500764	NUT HEX #8-32 Z050		1		1	
35	504083	SNAP BUSHING / .250x.468.406		1		1	
36	505504	KNOB, PULL / 8-32		1		1	
37	482726	CLOSING PLATE 30MM X 50MM / SS		1		1	
NS	504473	RIVET POP DOME OE 1/8x1/4 SS		4		4	
		A) INSIDE OF DOOR FRAME PANEL					

From Y-7046 To 6-8906		Date:07/2024	PAGE:Y2-1864-00
BAGGAGE DOOR ASSY - BUS			

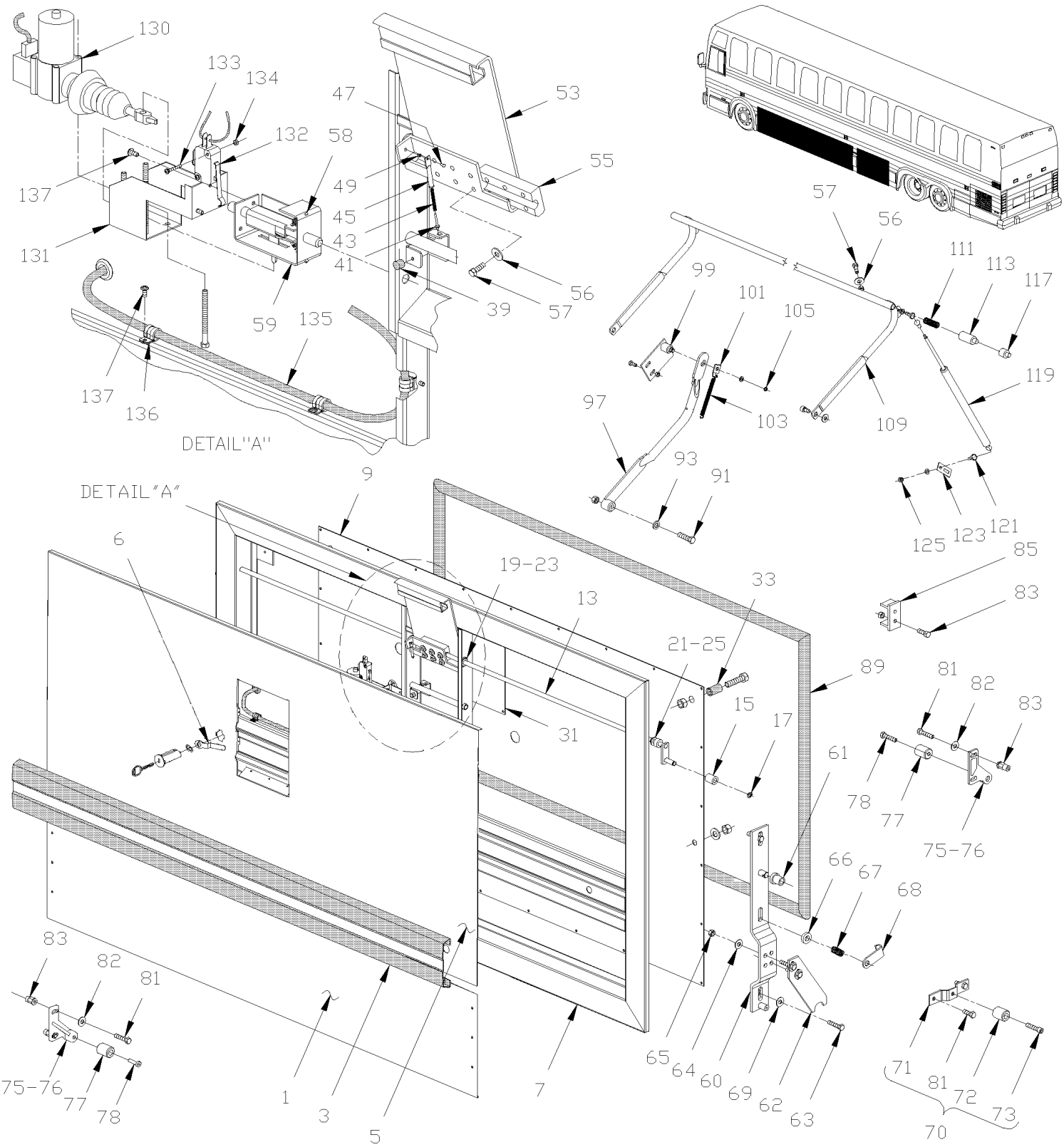

From Y-7046 To 6-8906		Date:07/2024	PAGE:Y2-1864-00

BAGGAGE DOOR ASSY - BUS

Item#	Part	Description	XLII 45	XLII MTH40	XLII MTH45	XLII MTH45E	NOTES
		ALL DOORS ASSY DO NOT INCLUDE					
		RUB-RAIL PLEASE ORDER SEPARATELY					
	483519	DOOR ASSY 60" / W/FLAT PANEL & ELECTRIC LOCK	6				
	483136P	DOOR ASSY 60" / W/FLAT PANEL	6				
	483404	DOOR ASSY 60" / W/INSUL & ELECTRIC LOCK	AR				A
	483404	DOOR ASSY 60" / W/INSUL & ELECTRIC LOCK	6				A
	483518	DOOR ASSY 60" / W/INT PANEL	6				B
1	481994	. LOWER PANEL 60" / S.B.	AR				A
1	483220	. LOWER PANEL / FLAT 60" To 1-7726	1				
1	483542	. LOWER PANEL / FLAT 60" From 1-7727	1				
NS	504272	. RIVET CHY Q BRAZ 3/16x1/8 SS	6				
3	**Y2-1855-00**	**. RUB RAIL - EXTERIOR CREST & TRIMS**					
NS	504433	. SNAP-IN PLUG / 1.090 O.D.	AR				
5	482860	. UPPER PANEL / 60" / S.B.	AR				A
5	483129	. UPPER PANEL / FLAT / 60"	1				
6	281498	. PIVOT LOCK 3/8" OFFSET	1				
7	483110	. FRAME 60" To 2-7760	1				
7	483480	. FRAME 60" From 2-7761 To 3-8109	1				
7	483733	. FRAME 60" From 3-8110	1				
9	483146	. PANEL INTERIOR 60" To 2-7760	1				
9	483538	. PANEL INTERIOR 60" From 2-7761 To 5-8358	1				
9	483812	. PANEL INTERIOR 60" From 5-8359	1				
NS	504347	. RIVET POP DOME OE 3/16x1/4 AL	AR				
NS	506268	. TAPE RUB ADH1 URE 3/8" x 1/2" x 25' / GREY 1820	1				
13	481975	. ROD ASSY LOCK W/60" To 2-7831	2				
13	483593	. ROD ASSY LOCK W/60" From 2-7832	2				
13	481973	. . ROD LOCK W/60" To 2-7831	2				
13	483594	. . ROD LOCK W/60" From 2-7832	2				
15	480478	. . ROLLER To 2-7831	1				
15	483595	. . ROLLER From 2-7832	1				
17	504318	. . RING RETAINER / EXT .375 x .352 x .025	1				
19	504650	. GROMMET / .375x.625x.062x.313x.875	2				
21	507254	. BUSHING NYLINER W/SHOULDER	2				
23	507260	. BUSHING NYLINER W/SHOULDER .375x.437x.375x.594	2				
25	505229	. SPACER 3/8 I.D. X 3/8 LG	2				
31	481787	. PANEL ACCESS 9" X 9"	1				
NS	500257	. WASHER LO SPT 10.2x18.1x2.2 Z050	4				
33	504311	. BUMPER RUBBER / 1.500 OD x1.500 TH x.250 HOLE To 2-7760	2				
33	5001168	. BUMPER RUBBER / .750 OD x .562 TH x .187 HOLE From 2-7761	2				

From Y-7046 To 6-8906		Date:07/2024	PAGE:Y2-1864-00

BAGGAGE DOOR ASSY - BUS

Item#	Part	Description	XLII 45	XLII MTH40	XLII MTH45	XLII MTH45E	NOTES
NS	500508	. SCREW TC PAN PH #10-32x1 1/2 Z050	2				
39	504334	. BUMPER RUBBER / .625 OD x .406 TH x .156 HOLE	1				
NS	504339	. RIVET POP DOME OE 1/8x3/8 SS	1				
41	481007	. ROD ASSY MALE	1				
43	480394	. SPRING COMPRESSION / .355 O.D. 3.375 x .063	1				
45	481227	. ROD FEMALE	1				
47	504142	. RIVET SOL RND 1/4x3/8 SS	1				
49	481012	. BUSHING LEVER	1				
53	481358	. HANDLE ASSY / S.B.	1				
55	481011	. RETAINER ROD / HANDLE / CHROMATE To 2-7831	1				
55	483587	. RETAINER ROD / HANDLE / E-COAT BLACK From 2-7832	1				
56	500473	. WASHER LO SPT .262x.489x.062 Z050	6				
57	500163	. SCREW CAP HEX 1/4-20x3/4 G5 Z050	6				
58	481564	. ROD GUIDE	2				
59	502151	. SPRING COMPRESSION / .300 O.D. x 1 x .032	2				
NS	480932	. BRACKET ASSY	1				
. NS	480933	. . BRACKET	1				
. NS	480935	. . ROD	1				
. NS	480937	. . PLATE, SUPPORT	1				
60	480465	. PLATE ASSY L.H. To 1-7680	1				
60	482820	. PLATE ASSY L.H. From 1-7681 To 1-7831	1				
60	483588	. PLATE ASSY L.H. From 2-7832	1				
60	480466	. PLATE ASSY R.H. To 1-7680	1				
60	482994	. PLATE ASSY R.H. From 1-7681 To 1-7831	1				
60	483591	. PLATE ASSY R.H. From 2-7832	1				
60	480463	. . BRACKET ASSY L.H. To 2-7831	1				
60	483589	. . BRACKET ASSY L.H. From 2-7832	1				
60	480464	. . BRACKET ASSY R.H. To 2-7831	1				
60	483592	. . BRACKET ASSY R.H. From 2-7832	1				
61	507257	. . BUSHING NYLINER W/SHOULDER	1				
62	480498	. . PLATE LOCK To 1-7680	1				
62	482358	. . PLATE LOCK From 1-7681 To 1-7831	1				
62	483590	. . PLATE LOCK From 2-7832	1				
63	500179	. . SCREW CAP HEX 5/16-18x3/4 G5 Z050	5				
64	500441	. . WASHER FL .312x.734x.065 Z050	1				
65	500777	. . NUT HEX STO 5/16-18 Z050	1				
66	481287	. SPACER To 2-7831	1				
66	481496	. SPACER From 2-7832	1				
67	480705	. SPRING COMPRESSION / .600 O.D. x 1 x .055 CROMAT	1				
68	480657	. HOOK 68MM	1				
NS	500441	. WASHER FL .312x.734x.065 Z050	1				
NS	500183	. SCREW CAP HEX 5/16-18x1 1/2 G5 PT Z050	7				

From Y-7046 To 6-8906		Date:07/2024	PAGE:Y2-1864-00

BAGGAGE DOOR ASSY - BUS

Item#	Part	Description	XLII 45	XLII MTH40	XLII MTH45	XLII MTH45E	NOTES
69	500476	. WASHER LO SPT .317x.586x.078 Z050	5				
70	480510	. PLATE ASSY ANCHOR / ROLLER To 1-7680	2				H
71	481615	. PLATE ATTACHMENT To 1-7680	1				H
72	480387	. ROLLER CATCH / LOWER To 2-7831	1				
72	483597	. ROLLER CATCH / LOWER From 2-7832	1				
73	502512	. SCREW CAP HEXS 5/16-18x1 1/2 ZP To 1-7680	1				
75	483389	ATTACHMENT ASSY L.H. / W/ROLLER From 1-7681 To 2-7831	1				V
75	483598	ATTACHMENT ASSY L.H. / W/ROLLER From 2-7832 To 2-7934	1				V
75	483602	ATTACHMENT ASSY L.H. / W/ROLLER / DIE CASTING From 2-7935	1				V
75	483388	ATTACHMENT ASSY R.H. / W/ROLLER From 1-7681 To 2-7831	1				V
75	483596	ATTACHMENT ASSY R.H. / W/ROLLER From 2-7832 To 2-7934	1				V
75	483604	ATTACHMENT ASSY R.H. / W/ROLLER / DIE CASTING From 2-7935	1				V
76	483386	. ATTACHMENT ASSY L.H. From 1-7681 To 2-7934	1				
76	483387	. ATTACHMENT ASSY R.H. From 1-7681 To 2-7934	1				
76	483460	. ATTACHMENT ASSY L.H. / DIE CASTING From 2-7935	1				
76	483461	. ATTACHMENT ASSY R.H. / DIE CASTING From 2-7935	1				
77	483597	. ROLLER CATCH / LOWER From 1-7681	1				
78	502503	. SCREW CAP HEXS 5/16-18x1 1/2 N500	1				
81	500181	SCREW CAP HEX 5/16-18x1 G5 Z050 To 3-7990	AR				
81	955297	SCREW CAP HEX M8-1.25x25 G8.8 ZG603 From 3-7991	AR				
82	5001045	WASHER BEL SPR .331x.827x.098 Z050 To 3-7990	AR				
82	500321	WASHER BEL SPR .331x.827x.098 N500 From 3-7991	AR				
83	502523	RIVET NUT FL OKS 5/16-18 .059-.119 To 3-7990	AR				
83	5001337	NUT INS FL HEX M8-1.25 0.5-3.0 Z050 From 3-7991	AR				
85	482289	STRIKER CATCH To 2-7831	2				
85	483599	STRIKER CATCH From 2-7832	2				
89	481988	WEATHERSTRIP / W/60" BAGGAGE DOORS	6				
89	485628	WEATHERSTRIP / W/60" BAGGAGE DOORS	6				
NS	480154	. WEATHERSTRIP RUBBER / ADH / RAW MATERIAL To 5-8544	AR				
NS	483941	. WEATHERSTRIP RUBBER / ADH / RAW MATERIAL From 5-8545	AR				
89	485610	. WEATHERSTRIP RUBBER / ADH / RAW MATERIAL	AR				
91	500162	SCREW CAP HEX 1/4-20x1/2 G5 Z050	6				
93	500473	WASHER LO SPT .262x.489x.062 Z050	6				
97	481065	LEVER ASSY To 2-7831	1				
97	483581	LEVER ASSY From 2-7832	1				
97	481062	. LEVER To 2-7831	1				
97	483582	. LEVER From 2-7832	1				
NS	507143	. BUSHING, NYLINER (8-L-12-D)	1				
99	481757	. PLATE ATTACHMENT To 2-7831	1				
99	483583	. PLATE ATTACHMENT From 2-7832	1				
101	480382	. PLATE ATTACHMENT / SPRING To 2-7831	1				
101	483584	. PLATE ATTACHMENT / SPRING From 2-7832	1				

From Y-7046 To 6-8906		Date:07/2024	PAGE:Y2-1864-00

BAGGAGE DOOR ASSY - BUS

Item#	Part	Description	XLII 45	XLII MTH40	XLII MTH45	XLII MTH45E	NOTES
103	502056	. SPRING EXTENSION / .437 O.D. X 5.375 x .062	1				
105	504477	. RING RETAINER / EXT 14.0 X 13.4 X 1.0MM	1				
NS	500496	. WASHER FL .437x.750x.054 Z050	AR				
109	482349	LEVER / W/60" To 2-7831	1				
109	483586	LEVER / W/60" From 2-7832	1				
111	502144	SPRING COMPRESSION / .720 O.D. x 2 x .062	1				
113	480369	PIVOT	1				
113	483585	PIVOT From 2-7832	1				
NS	5001346	SCREW SET HEXS CONE 1/4-20x3/4	1				
117	507141	BUSHING, NYLINER W/SHOULDER (7-L-7-F)	2				
119	980024	CYLINDER GAZ / 669/409MM C/C / 200LBS	1				
121	980015	BALL STUD / W/10 MM X M8-1.25 / 29.18 MM	2				
123	481088	PLATE CYLINDER ADJUSTEMENT / W/53" & 60"	1				
125	502760	NUT HEX TWAY M8-1.25 Z050	2				
		NEXT FOLLOWING PARTS ARE RELATED WITH					
		ELECTRICAL DOOR LOCK					
		(FOR RETORFIT YOU REQUIRE ONE SET FOR EACH)					
130	780428	LOCK ACTUATOR / 12V	1				
. NS	562076	. CONNECTOR / PACK-CON I / FEMALE HOUSING / 2C / PED 8911772	1				
130	**2810382**	**ACTUATOR SERVICE KIT**	1				
131	482109	BRACKET / TO FIX LOCK ACTUATOR	1				
132	562096	MICRO SWITCH	1				
133	502577	SCREW MA PAN PH M3-0.5x16 ZP	2				
134	502579	NUT HEX M3-0.5 NP	2				
135	062796	CABLE ASSY / ACTUATOR POWER / EACH DOOR	1				
136	560481	CLAMP / 5/8" I.D.	3				
137	500883	SCREW TC PAN PH #8-32x3/8 Z050	6				
NS	062823	CABLE ASSY / FRT JCT PANEL W/DOOR LOCK	1				
NS	063387	CABLE ASSY / FUEL COMP & REAR DOOR	1				
NS	063361	CABLE ASSY / FRT JCT PANEL TO FUEL COMPT	1				
		A) USE WITH BUS WITH FLUTED LOWER PANELLING					
		B) USE WITH BUS WITH FLUTED LOWER PANELLING & W/OUT ELECTRICAL LOCK					
		H) THOSE PLATE ATTACHMENTS ARE FIXED HORIZONTAL ON FLOOR STRUCTURE					
		V) THOSE ATTACHMENTS ARE FIXED ON VERTICAL POST STRUCTURE					

From Y-7046 To 8-9339		Date:07/2024	PAGE:Y2-1864-50
BAGGAGE DOOR ASSY - MTH			

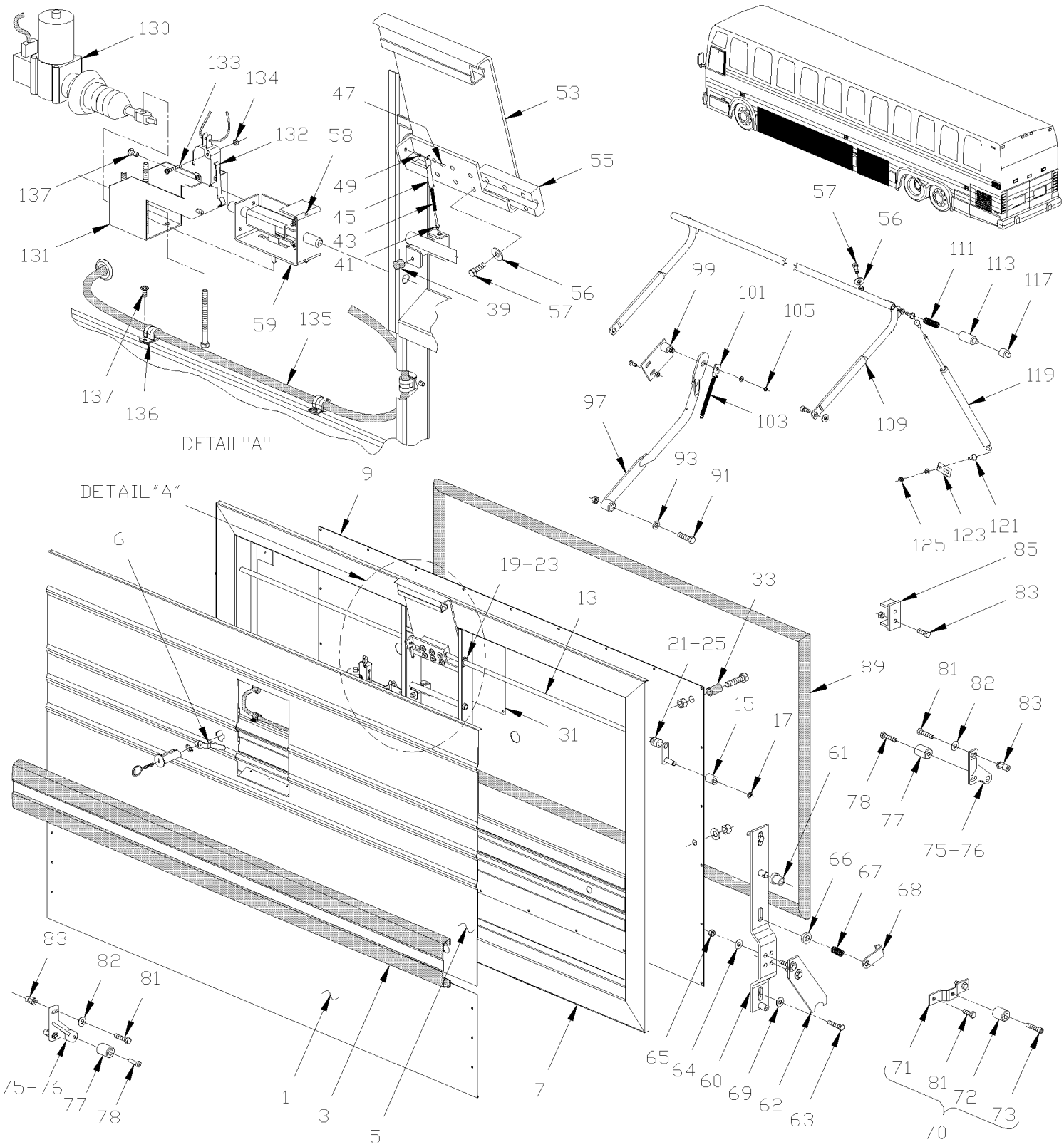

From Y-7046 To 8-9339		Date:07/2024	PAGE:Y2-1864-50

BAGGAGE DOOR ASSY - MTH

Item#	Part	Description	XLII 45	XLII MTH40	XLII MTH45	XLII MTH45E	NOTES
		ALL DOORS ASSY DO NOT INCLUDE					
		RUB-RAIL PLEASE ORDER SEPARATELY					
		THE FOLLOWING 4 DOOR ARE STANDARD WITH					
		PANEL W/O PERFORATED PANELS.					
		FOR SPECIAL PURPOSE DOOR ASSY REFER TO					
		PERFORATED & SPECIAL PANELS (BOOK PA-1108)					
	483328P	DOOR ASSY 38" / W/INSULATING & INT. PANEL				AR	
	350972	. INSULATING KIT / 38" DOOR				1	
	483521	DOOR ASSY 45" / W/INSUL & ELECTRIC LOCK		2		2	
	483783	BAGGAGE DOOR ASSY 45" / W/INSUL & ELECTRIC LOCK / SPECIFIED UPPER & LOWER PANE		AR		AR	E
NS	350954	. INSULATING KIT / 45" DOOR		1		1	
	483520	DOOR ASSY 53" / W/INSUL & ELECTRIC LOCK To 5-8813		6			
	483520	DOOR ASSY 53" / W/INSUL & ELECTRIC LOCK			2		
	483520	DOOR ASSY 53" / W/INSUL & ELECTRIC LOCK				8	
	483782	BAGGAGE DOOR ASSY 53" / W/INSUL & ELECTRIC LOCK / SPECIFIED UPPER & LOWER PANE		AR	AR	AR	F
NS	350951	. INSULATING KIT / 53" DOOR		1	1	1	
	483404	DOOR ASSY 60" / W/INSUL & ELECTRIC LOCK To 5-8468			6		
	480022	DOOR ASSY 60" / W/INSUL & ELECTRIC LOCK From 5-8469			6		
	483784	BAGGAGE DOOR ASSY 60" / W/INSUL & ELECTRIC LO / SPECIFIED UPPER & LOWER PANE			AR		G
NS	350940	. INSULATING KIT / 60" DOOR			1		
1	474769	. LOWER PANEL 38" / S.B. To 5-8468				1	
1	483928	. LOWER PANEL 38" / B.A. From 5-8469				1	
1	482490	. LOWER PANEL 45" / S.B. To 5-8468		1		1	
1	483887	. LOWER PANEL 45" / B.A. From 5-8469		1		1	
1	481003	. LOWER PANEL 53" / S.B. To 5-8468		1	1	1	
1	483772	. LOWER PANEL 53" / B.A. From 5-8469		1	1	1	
1	481994	. LOWER PANEL 60" / S.B. To 5-8468			1		
1	483881	. LOWER PANEL 60" / B.A. From 5-8469			1		
NS	504272	. RIVET CHY Q BRAZ 3/16x1/8 SS		6	6	6	
3	**Y2-1855-00**	**. RUB RAIL - EXTERIOR CREST & TRIMS**					
NS	504433	. SNAP-IN PLUG / 1.090 O.D.		AR	AR	AR	
5	474768	. UPPER PANEL / 38" / S.B. To 5-8813		1			
5	482888	. UPPER PANEL / 45" / S.B. To 5-8468		1		1	
5	483842	. UPPER PANEL / 45" / B.A. From 5-8469		1		1	
5	482832	. UPPER PANEL / 53" / S.B. To 5-8468		1	1	1	

From Y-7046 To 8-9339		Date:07/2024	PAGE:Y2-1864-50

BAGGAGE DOOR ASSY - MTH

Item#	Part	Description	XLII 45	XLII MTH40	XLII MTH45	XLII MTH45E	NOTES
5	483827	. UPPER PANEL / 53" / B.A. From 5-8469		1	1	1	
5	482860	. UPPER PANEL / 60" / S.B. To 5-8468			1		
5	483838	. UPPER PANEL / 60" / B.A. From 5-8469			1		
5	483954	. UPPER PANEL / 60" / B.A. From 5-8457			1		J
6	281498	. PIVOT LOCK 3/8" OFFSET		1	1	1	
7	483320	. FRAME 38" To 2-7760		1			
7	483483	. FRAME 38" From 2-7761 To 3-8109		1			
7	483736	. FRAME 38" From 3-8110 To 5-8813		1			
7	483168	. FRAME 45" To 2-7760		1		1	
7	483481	. FRAME 45" From 2-7761 To 3-8109		1		1	
7	483734	. FRAME 45" From 3-8110		1		1	
7	483169	. FRAME 53" To 2-7760		1	1	1	
7	483482	. FRAME 53" From 2-7761 To 3-8109		1	1	1	
7	483735	. FRAME 53" From 3-8110		1	1	1	
7	483110	. FRAME 60" To 2-7760			1		
7	483480	. FRAME 60" From 2-7761 To 3-8109			1		
7	483733	. FRAME 60" From 3-8110			1		
9	483324	. PANEL INTERIOR 38" To 5-8813		1			
9	483194	. PANEL INTERIOR 45" To 2-7760		1		1	
9	483561	. PANEL INTERIOR 45" From 2-7761 To 5-8358		1		1	
9	483813	. PANEL INTERIOR 45" From 5-8359		1		1	
9	483195	. PANEL INTERIOR 53" To 2-7760		1	1	1	
9	483560	. PANEL INTERIOR 53" From 2-7761 To 5-8358		1	1	1	
9	483811	. PANEL INTERIOR 53" From 5-8359		1	1	1	
9	483146	. PANEL INTERIOR 60" To 2-7760			1		
9	483538	. PANEL INTERIOR 60" From 2-7761 To 5-8358			1		
9	483812	. PANEL INTERIOR 60" From 5-8359			1		
9	482224	. PANEL INTERIOR 60"			1		C
9	482225	. PANEL INTERIOR 60"			1		D
NS	504347	. RIVET POP DOME OE 3/16x1/4 AL		AR	AR	AR	
NS	506268	. TAPE RUB ADH1 URE 3/8" x 1/2" x 25' / GREY 1820		1	1	1	
13	481135	. ROD ASSY LOCK W/38" To 2-7831		2			
13	480782	. ROD ASSY LOCK W/38" From 2-7832 To 5-8813		2			
13	482473	. ROD ASSY LOCK W/45" To 2-7831		2		2	
13	480769	. ROD ASSY LOCK W/45" From 2-7832		2		2	
13	481039	. ROD ASSY LOCK W/53" To 2-7831		2	2	2	
13	480936	. ROD ASSY LOCK W/53" From 2-7832		2	2	2	
13	481975	. ROD ASSY LOCK W/60" To 2-7831			2		
13	483593	. ROD ASSY LOCK W/60" From 2-7832			2		
13	481086	. . ROD LOCK W/38" To 2-7831		1			
13	480783	. . ROD LOCK W/38" From 2-7832 To 5-8813		1			
13	482475	. . ROD LOCK W/45" To 2-7831		1		1	

From Y-7046 To 8-9339		Date:07/2024	PAGE:Y2-1864-50

BAGGAGE DOOR ASSY - MTH

Item#	Part	Description	XLII 45	XLII MTH40	XLII MTH45	XLII MTH45E	NOTES
13	480770	. . ROD LOCK W/45" From 2-7832		1		1	
13	480995	. . ROD LOCK W/53" To 2-7831		2	2	2	
13	480940	. . ROD LOCK W/53" From 2-7832		2	2	2	
13	481973	. . ROD LOCK W/60" To 2-7831			2		
13	483594	. . ROD LOCK W/60" From 2-7832			2		
15	480478	. . ROLLER To 2-7831		1	1	1	
15	483595	. . ROLLER From 2-7832		1	1	1	
17	504318	. . RING RETAINER / EXT .375 x .352 x .025		1	1	1	
19	504650	. GROMMET / .375x.625x.062x.313x.875		2	2	2	
21	507254	. BUSHING NYLINER W/SHOULDER		2	2	2	
23	507260	. BUSHING NYLINER W/SHOULDER .375x.437x.375x.594		2	2	2	
25	505229	. SPACER 3/8 I.D. X 3/8 LG		2	2	2	
31	481787	. PANEL ACCESS 9" X 9"		1	1	1	
NS	500257	. WASHER LO SPT 10.2x18.1x2.2 Z050		4	4	4	
33	504311	. BUMPER RUBBER / 1.500 OD x1.500 TH x.250 HOLE To 2-7760		2	2	2	
33	5001168	. BUMPER RUBBER / .750 OD x .562 TH x .187 HOLE From 2-7761		2	2	2	
NS	500508	. SCREW TC PAN PH #10-32x1 1/2 Z050		2	2	2	
39	504334	. BUMPER RUBBER / .625 OD x .406 TH x .156 HOLE		1	1	1	
NS	504339	. RIVET POP DOME OE 1/8x3/8 SS		1	1	1	
41	481007	. ROD ASSY MALE		1	1	1	
43	480394	. SPRING COMPRESSION / .355 O.D. 3.375 x .063		1	1	1	
45	481227	. ROD FEMALE		1	1	1	
47	504142	. RIVET SOL RND 1/4x3/8 SS		1	1	1	
49	481012	. BUSHING LEVER		1	1	1	
53	481358	. HANDLE ASSY / S.B. To 5-8468		1	1	1	
53	483897	. HANDLE ASSY / B.A. From 5-8469		1	1	1	
55	481011	. RETAINER ROD / HANDLE / CHROMATE To 2-7831		1	1	1	
55	483587	. RETAINER ROD / HANDLE / E-COAT BLACK From 2-7832		1	1	1	
56	500473	. WASHER LO SPT .262x.489x.062 Z050		6	6	6	
57	500163	. SCREW CAP HEX 1/4-20x3/4 G5 Z050		6	6	6	
58	481564	. ROD GUIDE		2	2	2	
59	502151	. SPRING COMPRESSION / .300 O.D. x 1 x .032		2	2	2	
NS	480932	. BRACKET ASSY		1	1	1	
. NS	480933	. . BRACKET		1	1	1	
. NS	480935	. . ROD		1	1	1	
. NS	480937	. . PLATE, SUPPORT		1	1	1	
60	480465	. PLATE ASSY L.H. To 1-7680		1	1	1	
60	482820	. PLATE ASSY L.H. From 1-7681 To 1-7831		1	1	1	
60	483588	. PLATE ASSY L.H. From 2-7832		1	1	1	
60	480466	. PLATE ASSY R.H. To 1-7680		1	1	1	
60	482994	. PLATE ASSY R.H. From 1-7681 To 1-7831		1	1	1	
60	483591	. PLATE ASSY R.H. From 2-7832		1	1	1	

From Y-7046 To 8-9339		Date:07/2024	PAGE:Y2-1864-50

BAGGAGE DOOR ASSY - MTH

Item#	Part	Description	XLII 45	XLII MTH40	XLII MTH45	XLII MTH45E	NOTES
60	480463	. . BRACKET ASSY L.H. To 2-7831		1	1	1	
60	483589	. . BRACKET ASSY L.H. From 2-7832		1	1	1	
60	480464	. . BRACKET ASSY R.H. To 2-7831		1	1	1	
60	483592	. . BRACKET ASSY R.H. From 2-7832		1	1	1	
61	507257	. . BUSHING NYLINER W/SHOULDER		1	1	1	
62	480498	. . PLATE LOCK To 1-7680		1	1	1	
62	482358	. . PLATE LOCK From 1-7681 To 1-7831		1	1	1	
62	483590	. . PLATE LOCK From 2-7832		1	1	1	
63	500179	. . SCREW CAP HEX 5/16-18x3/4 G5 Z050		5	5	5	
64	500441	. . WASHER FL .312x.734x.065 Z050		1	1	1	
65	500777	. . NUT HEX STO 5/16-18 Z050		1	1	1	
66	481287	. SPACER To 2-7831		1	1	1	
66	481496	. SPACER From 2-7832		1	1	1	
67	480705	. SPRING COMPRESSION / .600 O.D. x 1 x .055 CROMAT		1	1	1	
68	480657	. HOOK 68MM				1	
68	483477	. HOOK 76MM		1	1		
NS	500441	. WASHER FL .312x.734x.065 Z050		1	1	1	
NS	500183	. SCREW CAP HEX 5/16-18x1 1/2 G5 PT Z050		7	7	7	
69	500476	. WASHER LO SPT .317x.586x.078 Z050		5	5	5	
70	480510	. PLATE ASSY ANCHOR / ROLLER To 1-7680		2	2	2	H
71	481615	. PLATE ATTACHMENT To 1-7680		1	1	1	H
72	480387	. ROLLER CATCH / LOWER To 2-7831		1	1	1	
72	483597	. ROLLER CATCH / LOWER From 2-7832		1	1	1	
73	502512	. SCREW CAP HEXS 5/16-18x1 1/2 ZP To 1-7680		1	1	1	
75	483389	ATTACHMENT ASSY L.H. / W/ROLLER From 1-7681 To 2-7831		1	1	1	V
75	483598	ATTACHMENT ASSY L.H. / W/ROLLER From 2-7832 To 2-7934		1	1	1	V
75	483602	ATTACHMENT ASSY L.H. / W/ROLLER / DIE CASTING From 2-7935		1	1	1	V
75	483388	ATTACHMENT ASSY R.H. / W/ROLLER From 1-7681 To 2-7831		1	1	1	V
75	483596	ATTACHMENT ASSY R.H. / W/ROLLER From 2-7832 To 2-7934		1	1	1	V
75	483604	ATTACHMENT ASSY R.H. / W/ROLLER / DIE CASTING From 2-7935		1	1	1	V
76	483386	. ATTACHMENT ASSY L.H. From 1-7681 To 2-7934		1	1	1	
76	483387	. ATTACHMENT ASSY R.H. From 1-7681 To 2-7934		1	1	1	
76	483460	. ATTACHMENT ASSY L.H. / DIE CASTING From 2-7935		1	1	1	
76	483461	. ATTACHMENT ASSY R.H. / DIE CASTING From 2-7935		1	1	1	
77	483597	. ROLLER CATCH / LOWER From 1-7681		1	1	1	
78	502503	. SCREW CAP HEXS 5/16-18x1 1/2 N500		1	1	1	
81	500181	SCREW CAP HEX 5/16-18x1 G5 Z050 To 3-7990		AR	AR	AR	
81	955297	SCREW CAP HEX M8-1.25x25 G8.8 ZG603 From 3-7991		AR	AR	AR	
82	5001045	WASHER BEL SPR .331x.827x.098 Z050 To 3-7990		AR	AR	AR	
82	500321	WASHER BEL SPR .331x.827x.098 N500 From 3-7991		AR	AR	AR	
83	502523	RIVET NUT FL OKS 5/16-18 .059-.119 To 3-7990		AR	AR	AR	
83	5001337	NUT INS FL HEX M8-1.25 0.5-3.0 Z050 From 3-7991		AR	AR	AR	

From Y-7046 To 8-9339		Date:07/2024	PAGE:Y2-1864-50

BAGGAGE DOOR ASSY - MTH

Item#	Part	Description	XLII 45	XLII MTH40	XLII MTH45	XLII MTH45E	NOTES
85	482289	STRIKER CATCH To 2-7831		2	2	2	
85	483599	STRIKER CATCH From 2-7832		2	2	2	
86	502523	RIVET NUT FL OKS 5/16-18 .059-.119		AR	AR	AR	
89	481137	WEATHERSTRIP / W/38" BAGGAGE DOORS To 5-8813		2			
89	485629	WEATHERSTRIP / W/38" BAGGAGE DOORS To 5-8813		2			
89	482462	WEATHERSTRIP / W/45" BAGGAGE DOORS		2		2	
89	485630	WEATHERSTRIP / W/45" BAGGAGE DOORS		2		2	
89	481033	WEATHERSTRIP / W/53" BAGGAGE DOORS To 5-8813		6			
89	481033	WEATHERSTRIP / W/53" BAGGAGE DOORS				8	
89	481033	WEATHERSTRIP / W/53" BAGGAGE DOORS			2		
89	485635	WEATHERSTRIP / W/53" BAGGAGE DOORS		AR	AR	AR	
89	481988	WEATHERSTRIP / W/60" BAGGAGE DOORS			6		
89	485628	WEATHERSTRIP / W/60" BAGGAGE DOORS			6		
NS	480154	. WEATHERSTRIP RUBBER / ADH / RAW MATERIAL To 5-8544		AR	AR	AR	
NS	483941	. WEATHERSTRIP RUBBER / ADH / RAW MATERIAL From 5-8545		AR		AR	
89	485610	. WEATHERSTRIP RUBBER / ADH / RAW MATERIAL		AR		AR	
91	500162	SCREW CAP HEX 1/4-20x1/2 G5 Z050		6	6	6	
93	500473	WASHER LO SPT .262x.489x.062 Z050		6	6	6	
97	481065	LEVER ASSY To 2-7831		1	1	1	
97	483581	LEVER ASSY From 2-7832		1	1	1	
97	481062	. LEVER To 2-7831		1	1	1	
97	483582	. LEVER From 2-7832		1	1	1	
NS	507143	. BUSHING, NYLINER (8-L-12-D)		1	1	1	
99	481757	. PLATE ATTACHMENT To 2-7831		1	1	1	
99	483583	. PLATE ATTACHMENT From 2-7832		1	1	1	
101	480382	. PLATE ATTACHMENT / SPRING To 2-7831		1	1	1	
101	483584	. PLATE ATTACHMENT / SPRING From 2-7832		1	1	1	
103	502056	. SPRING EXTENSION / .437 O.D. X 5.375 x .062		1	1	1	
105	504477	. RING RETAINER / EXT 14.0 X 13.4 X 1.0MM		1	1	1	
NS	500496	. WASHER FL .437x.750x.054 Z050		AR	AR	AR	
109	481084	LEVER / W/38" To 2-7831		1			
109	480785	LEVER / W/38" From 2-7832 To 5-8813		1			
109	482459	LEVER / W/45" To 2-7831		1		1	
109	480767	LEVER / W/45" From 2-7832		1		1	
109	482277	LEVER / W/53" To 2-7831		1	1	1	
109	483660	LEVER / W/53" From 2-7832		1	1	1	
109	482349	LEVER / W/60" To 2-7831			1		
109	483586	LEVER / W/60" From 2-7832			1		
111	502144	SPRING COMPRESSION / .720 O.D. x 2 x .062		1	1	1	
113	480369	PIVOT		1	1	1	
113	483585	PIVOT From 2-7832		1	1	1	
NS	5001346	SCREW SET HEXS CONE 1/4-20x3/4		1	1	1	

From Y-7046 To 8-9339		Date:07/2024	PAGE:Y2-1864-50

BAGGAGE DOOR ASSY - MTH

Item#	Part	Description	XLII 45	XLII MTH40	XLII MTH45	XLII MTH45E	NOTES
117	507141	BUSHING, NYLINER W/SHOULDER (7-L-7-F)		2	2	2	
119	980024	CYLINDER GAZ / 669/409MM C/C / 200LBS		1	1	1	
119	192226	CYLINDER GAZ / 669/409MM C/C / 200LBS HD		AR	AR	AR	
. NS	980017	. CLIP BALL STUD 10MM RETAINER		2	2	2	
121	980015	BALL STUD / W/10 MM X M8-1.25 / 29.18 MM		2	2	2	
121	288625	BLOCK RETAINER CYLINDER From 6-8806			1	1	A
121	502790	SCREW CAP HEX M8-1.25x20 G8.8 Z050 From 6-8806			2	2	A
121	500441	WASHER FL .312x.734x.065 Z050 From 6-8806			2	2	A
121	500476	WASHER LO SPT .317x.586x.078 Z050 From 6-8806			2	2	A
123	481088	PLATE CYLINDER ADJUSTEMENT / W/53" & 60"		1	1	1	
NS	482276	PLATE CYLINDER ADJUSTEMENT FOR OVER LOAD DOOR W/RAIL SS		AR		AR	
123	481305	PLATE ANGLE CYLINDER ADJUSTEMENT / W/38"		1		1	
123	482787	SUPPORT ASSY / W/45"		2		2	
125	502760	NUT HEX TWAY M8-1.25 Z050		2	2	2	
130	780428	LOCK ACTUATOR / 12V		1	1	1	
. NS	562076	. CONNECTOR / PACK-CON I / FEMALE HOUSING / 2C / PED 8911772		1	1	1	
130	**2810382**	**ACTUATOR SERVICE KIT OLD NUMBER STILL AVAILABLE**		1	1	1	
131	482109	BRACKET / TO FIX LOCK ACTUATOR		1	1	1	
132	562096	MICRO SWITCH		1	1	1	
133	502577	SCREW MA PAN PH M3-0.5x16 ZP		2	2	2	
134	502579	NUT HEX M3-0.5 NP		2	2	2	
135	062796	CABLE ASSY / ACTUATOR POWER / EACH DOOR		1	1	1	
136	560481	CLAMP / 5/8" I.D.		3	3	3	
137	500883	SCREW TC PAN PH #8-32x3/8 Z050		6	6	6	
NS	062823	CABLE ASSY / FRT JCT PANEL W/DOOR LOCK		1	1	1	
NS	064473	CABLE ASSY / FUEL COMP & REAR DOOR		1		1	
NS	063387	CABLE ASSY / FUEL COMP & REAR DOOR			1		
NS	064471	CABLE ASSY / FRT JCT PANEL TO FUEL COMPT To 5-8813		1			
NS	064470	CABLE ASSY / FRT JCT PANEL TO FUEL COMPT				1	
NS	063361	CABLE ASSY / FRT JCT PANEL TO FUEL COMPT			1		
		A) THOSE PARTS ARE LOCATED TO FLOOR BEAM WITH SLIDE-OUT					
		C) USE WITH 4TH BAY DOOR WITH 2 ACCESS PANEL "MARATHON"					
		D) USE WITH 1ST BAY DOOR WITH 2 ACCESS PANEL "MARATHON"					
		E) SERVICE NUMBER SPECIFIED "UPPER & LOWER PANEL" SEE CONVERTER'S SPECIAL BAGGAGES PANEL BOOK # PA-1108 SECTION 04					
		F) SERVICE NUMBER SPECIFIED "UPPER & LOWER PANEL" SEE CONVERTER'S SPECIAL BAGGAGES PANEL BOOK # PA-1108 SECTION 06					
		G) SERVICE NUMBER SPECIFIED "UPPER & LOWER PANEL" SEE CONVERTER'S SPECIAL BAGGAGES PANEL BOOK # PA-1108 SECTION 09					
		H) THOSE PLATE ATTACHMENTS ARE FIXED HORIZONTAL ON FLOOR STRUCTURE					
		J) USE WITH "VORAD" SYSTEM					
		V) THOSE ATTACHMENTS ARE FIXED ON VERTICAL POST STRUCTURE					

From Y-7046 To 8-9339		Date:07/2024	PAGE:Y2-1864-60
BAGGAGE DOOR R.H. - W/HINGE "SPECIAL"			

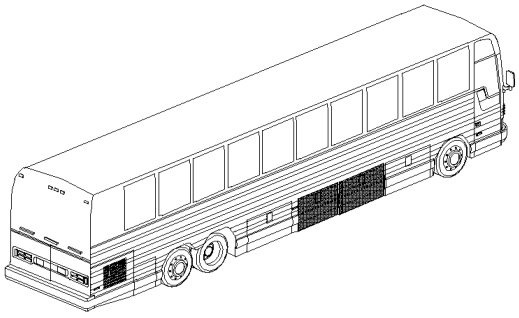

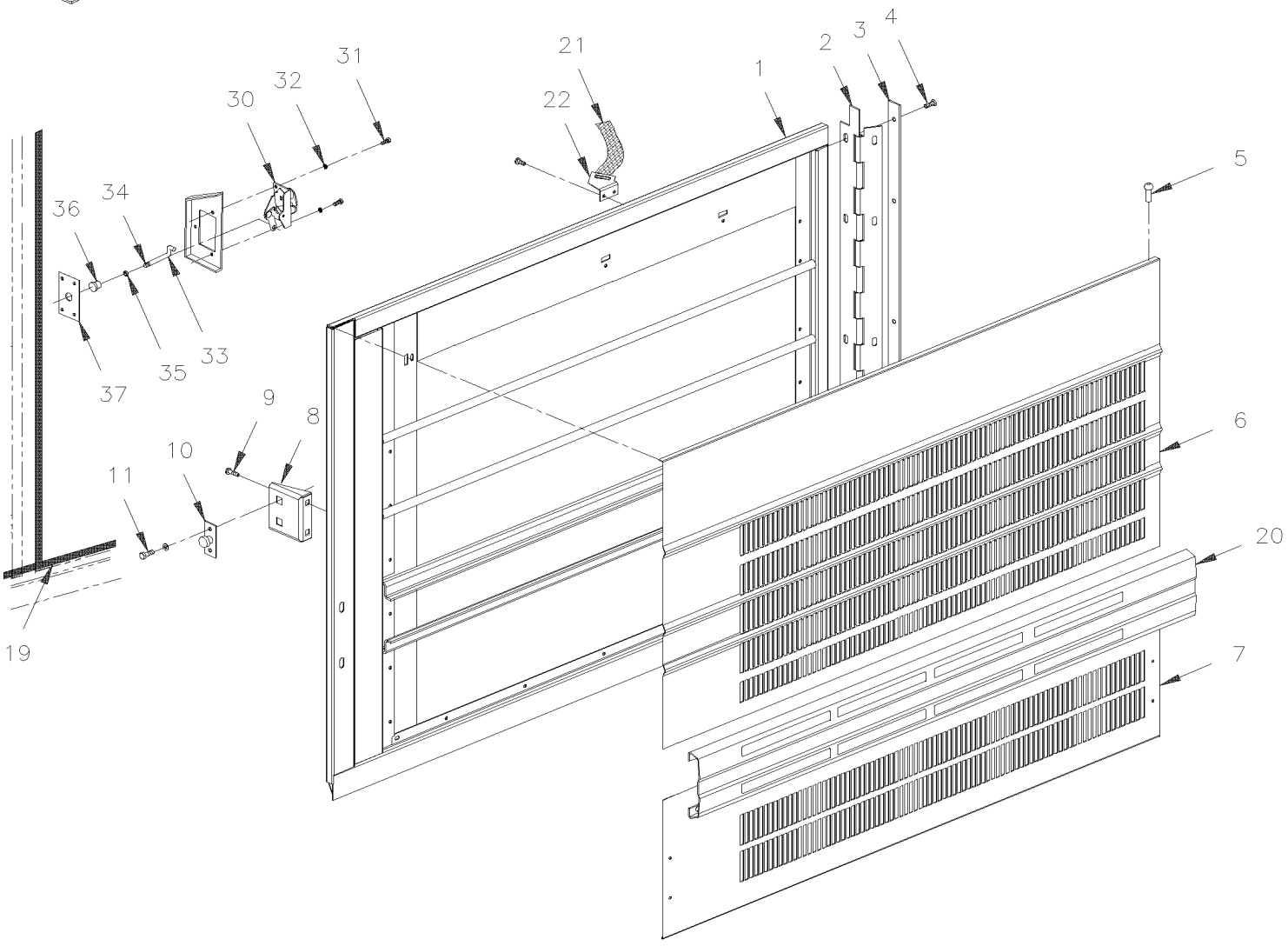

From Y-7046 To 8-9339		Date:07/2024	PAGE:Y2-1864-60

BAGGAGE DOOR R.H. - W/HINGE "SPECIAL"

Item#	Part	Description	XLII 45	XLII MTH40	XLII MTH45	XLII MTH45E	NOTES
	483023P	BAGGAGE DOOR 45" W/3.49 SQF PERFORATED AREA		1		1	
	482678P	BAGGAGE DOOR 53" W/2.58 SQF PERFORATED AREA		1	1	1	
1	483013	. FRAME ASSY 53"		1	1	1	
1	483009	. FRAME ASSY 45"		1		1	
1	680065	. TAPE COMPOUND / BLACK / 1/32" X 1" X 33' / L163-2400		AR	AR	AR	
1	680025	. CAULKING STRIP 3/16" O.D. X 14'		AR	AR	AR	
NS	481047	. HINGE PLATE 31"1/16 W/ 5 HOLES 1/4-28 To 2-7831		1	1	1	A
NS	483638	. HINGE PLATE 31"1/16 W/ 5 HOLES 1/4-28 From 2-7832		1	1	1	A
2	480907	. HINGE		1	1	1	
3	480910	. REINFORCEMENT OF HINGE / THIN 31 1/4" x 1/8 FRAME SIDE To 2-7831		1	1	1	
3	483637	. SUPPORT, HINGE / THIN 31 1/4 LG From 2-7832		1	1	1	
NS	481840	. REINFORCEMENT OF HINGE / 31 7/8" X GA11 STRUCTURE SIDE		1	1	1	
NS	481131	. SHIM 2" X 1"1/8 / HINGE SUPPORT		AR	AR	AR	
4	500316	. SCREW MA FL PH 1/4-28x3/4 SS		1	1	1	
5	504340	. RIVET POP DOME OE 1/8x3/16 SS		4	4	4	
6	482829	. PANEL W/2.58 SQF PERFORATED AREA / S.B. To 5-8468			1		
6	483964	. PANEL W/2.58 SQF PERFORATED AREA / B.A. From 5-8469			1		
6	483005	. UPPER PANEL W/1.90 SQF PERFORATED AREA / S.B.		1		1	
7	483007	. LOWER PANEL W/0.81 SQF PERFORATED AREA / S.B. To 5-8468		1		1	
7	483940	. LOWER PANEL W/0.81 SQF PERFORATED AREA / B.A. From 5-8469		1		1	
NS	504272	. RIVET CHY Q BRAZ 3/16x1/8 SS		6	6	6	
8	284605	. SUPPORT / TO FIX CATCH		1	1	1	
9	500163	. SCREW CAP HEX 1/4-20x3/4 G5 Z050		2	2	2	
NS	502583	. WASHER LO SERR 8.15x22.3x1.0 Z050		2	2	2	
10	780278	. PIN, STRIKER STUD		1	1	1	
NS	283326	. STRIKER PLATE, MOUNTING / 60MM X 25MM		1	1	1	
11	500316	. SCREW MA FL PH 1/4-28x3/4 SS		7	7	7	
NS	502582	. WASHER LO SERR 6.1x16.2x0.9 Z050		2	2	2	
NS	500692	. NUT HEX 1/4-28 Z050		2	2	2	
19	482099	WEATHERSTRIP / CONDENSOR DOOR			1		
19	480009	WEATHERSTRIP / CONDENSOR DOOR			1		
19	280152	. WEATHERSTRIP RUBBER EPDM CC EXTRUSION / RAW MATERIAL			AR		
20	**Y2-1855-00**	**RUB RAIL - EXTERIOR CREST & TRIMS**					
21	505507	STRAP NYLON 1" WIDE / S.L.		AR	AR	AR	
22	452813	SUPPORT STRAP RETAINER W/2 SLOTS & 2 HOLES		1	1	1	
30	780282	LOCK SPAGNOLET L.H.		1	1	1	
31	502531	SCREW CAP HEX M6-1.0x16 G8.8 Z050		2	2	2	
32	502582	WASHER LO SERR 6.1x16.2x0.9 Z050		2	2	2	
33	284596	ROD OPENING 68MM		1		1	
NS	482698	STRING 450 LG			1		
34	500764	NUT HEX #8-32 Z050		1		1	
35	504083	SNAP BUSHING / .250x.468.406		1		1	

From Y-7046 To 8-9339		Date:07/2024	PAGE:Y2-1864-60

BAGGAGE DOOR R.H. - W/HINGE "SPECIAL"

Item#	Part	Description	XLII 45	XLII MTH40	XLII MTH45	XLII MTH45E	NOTES
36	505504	KNOB, PULL / 8-32		1		1	
37	482725	CLOSING PLATE 30MM X 50MM / ALU		1		1	
37	505213	SHIM 1/16" THICK		AR	AR	AR	
37	505193	SHIM 1/8" THICK		AR	AR	AR	
37	504473	RIVET POP DOME OE 1/8x1/4 SS		4	4	4	
37	481157	WEATHERSTRIP / CONDENSOR DOOR		1		1	
37	480154	WEATHERSTRIP RUBBER / ADH / RAW MATERIAL To 5-8544		AR	AR	AR	
37	483941	WEATHERSTRIP RUBBER / ADH / RAW MATERIAL From 5-8545		AR	AR	AR	
37	485610	WEATHERSTRIP RUBBER / ADH / RAW MATERIAL		AR	AR	AR	
37	482453	SUPPORT			1		
		A) INSIDE OF DOOR FRAME PANEL					

From Y-7046 To 6-8906		Date:07/2024	PAGE:Y2-1864-80
BAGGAGE DOOR - W.C.L."RICON"			

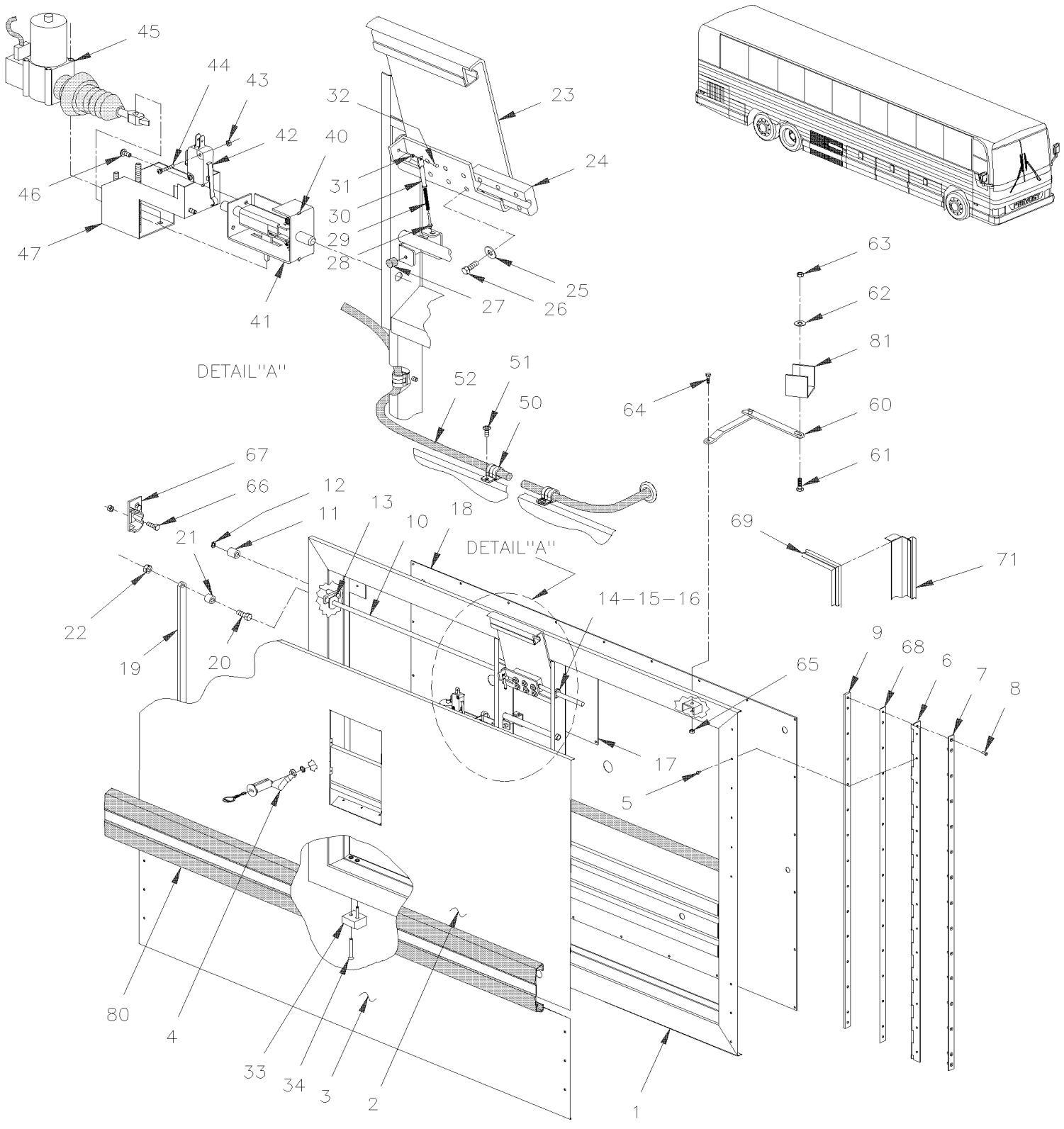

From Y-7046 To 6-8906		Date:07/2024	PAGE:Y2-1864-80

BAGGAGE DOOR - W.C.L."RICON"

Item#	Part	Description	XLII 45	XLII MTH40	XLII MTH45	XLII MTH45E	NOTES
		ALL DOORS ASSY DO NOT INCLUDE					
		RUB-RAIL PLEASE ORDER SEPARATELY					
	483333P	BAGGAGE DOOR ASSY / W.C.L. W/FLAT PANEL To 4-8278	1				
	483807	BAGGAGE DOOR ASSY From 4-8279	1				
	483648	BAGGAGE DOOR ASSY / W.C.L. W/FLUTED PANEL To 4-8278	1				A
1	483336	. BAGGAGE DOOR FRAME To 2-7760	1				
1	483484	. BAGGAGE DOOR FRAME From 2-7761 To 3-8109	1				
1	483737	. BAGGAGE DOOR FRAME From 3-8110 To 4-8278	1				
1	483789	. BAGGAGE DOOR FRAME From 4-8279	1				
2	483335	. UPPER PANEL	1				
2	483355	. UPPER PANEL	1				A
NS	504340	. RIVET POP DOME OE 1/8x3/16 SS	12				
3	483373	. LOWER PANEL	1				
3	483359	. LOWER PANEL	1				A
NS	504272	. RIVET CHY Q BRAZ 3/16x1/8 SS	6				
4	281498	. PIVOT LOCK 3/8" OFFSET	1				
5	504272	. RIVET CHY Q BRAZ 3/16x1/8 SS	6				
6	480907	. HINGE	1				
7	480910	. REINFORCEMENT OF HINGE / THIN 31 1/4" x 1/8 FRAME SIDE To 2-7831	1				
7	483637	. SUPPORT, HINGE / THIN 31 1/4 LG From 2-7832	1				
8	500316	. SCREW MA FL PH 1/4-28x3/4 SS	5				
9	481047	. HINGE PLATE 31"1/16 W/ 5 HOLES 1/4-28 To 2-7831	1				
9	483638	. HINGE PLATE 31"1/16 W/ 5 HOLES 1/4-28 From 2-7832	1				
10	483351	. ROD ASSY LOCK / W.C.L. DOOR To 2-7831	1				
10	483634	. ROD ASSY LOCK / W.C.L. DOOR From 2-7832 To 3-8109	1				
10	483540	. ROD ASSY LOCK / W.C.L. DOOR From 3-8110 To 4-8278	1				
10	483352	. . ROD LOCK / W.C.L. DOOR To 2-7831	1				
10	483635	. . ROD LOCK / W.C.L. DOOR From 2-7832 To 3-8109	1				
10	483539	. . ROD LOCK / W.C.L. DOOR From 3-8110 To 4-8278	1				
10	483787	. ROD LOCK / 60" From 4-8279	1				
11	483366	. ROLLER To 2-7831	1				
11	483636	. ROLLER From 2-7832	1				
12	504318	. RING RETAINER / EXT .375 x .352 x .025	1				
13	505520	. SPACER 3/8 I.D. X 5/8 LG	2				
NS	507254	. BUSHING NYLINER W/SHOULDER	1				
14	504650	. GROMMET / .375x.625x.062x.313x.875	2				
15	507260	. BUSHING NYLINER W/SHOULDER .375x.437x.375x.594	2				
16	5001011	. WASHER FL .406x.625x.040 Z050	4				
16	502102	. PIN, COTTER 1/8 x 1	2				
17	481787	. PANEL ACCESS 9" X 9"	1				

From Y-7046 To 6-8906		Date:07/2024	PAGE:Y2-1864-80

BAGGAGE DOOR - W.C.L."RICON"

Item#	Part	Description	XLII 45	XLII MTH40	XLII MTH45	XLII MTH45E	NOTES
NS	500582	. SCREW TP PAN PH #8x3/8 Z050	4				
18	483334	. INTERIOR PANEL	1				
NS	504347	. RIVET POP DOME OE 3/16x1/4 AL	28				
NS	504433	. SNAP-IN PLUG / 1.090 O.D.	1				
19	483356	. ROD TRANSFER To 2-7831	1				
19	483639	. ROD TRANSFER From 2-7832 To 4-8278	1				
19	483792	. ROD TRANSFER From 4-8279	1				
20	502625	. SCREW SHR HEXS 5/16x3/8 {1/4-20	2				
21	507301	. BUSHING NYLINER	2				
22	502819	. NUT HEX JAM 1/4-20 Z050	2				
23	481358	. HANDLE ASSY / S.B.	1				
24	481011	. RETAINER ROD / HANDLE / CHROMATE To 2-7831	1				
24	483587	. RETAINER ROD / HANDLE / E-COAT BLACK From 2-7832	1				
25	500473	. WASHER LO SPT .262x.489x.062 Z050	6				
26	500163	. SCREW CAP HEX 1/4-20x3/4 G5 Z050	6				
27	504334	. BUMPER RUBBER / .625 OD x .406 TH x .156 HOLE	1				
NS	504339	. RIVET POP DOME OE 1/8x3/8 SS	2				
28	481007	. ROD ASSY MALE	1				
29	480394	. SPRING COMPRESSION / .355 O.D. 3.375 x .063	1				
30	481227	. ROD FEMALE	1				
31	481012	. BUSHING LEVER	1				
32	504459	. RIVET MGLP PRDG 1/4x3/8 SS	1				
NS	502573	. WASHER FL 6.4x12.5x1.6 SS	1				
33	483788	. DOOR SUPPORT NYLON 60MM x 32MM x 6.4MM From 4-8279	1				
NS	483796	. SHIM 14GA 60MM x 32MM SS From 4-8279	AR				
34	500346	. SCREW MA FL PH 1/4-20x1 SS BK From 4-8279	2				
40	481564	. ROD GUIDE	2				
41	502151	. SPRING COMPRESSION / .300 O.D. x 1 x .032	2				
42	562096	. MICRO SWITCH	1				
43	502579	. NUT HEX M3-0.5 NP	4				
44	502577	. SCREW MA PAN PH M3-0.5x16 ZP	2				
45	780428	. LOCK ACTUATOR / 12V	1				
. NS	562076	. . CONNECTOR / PACK-CON I / FEMALE HOUSING / 2C / PED 8911772	1				
45	**2810382**	**. ACTUATOR SERVICE KIT**	1				
46	500883	. SCREW TC PAN PH #8-32x3/8 Z050	AR				
47	482109	. BRACKET / TO FIX LOCK ACTUATOR	1				
50	560481	. CLAMP / 5/8" I.D.	3				
51	500883	. SCREW TC PAN PH #8-32x3/8 Z050	AR				
52	062796	. CABLE ASSY / ACTUATOR POWER / EACH DOOR	1				
60	281444	. GUIDE ASSY / L.H. DOOR To 2-7831	1				
60	281912	. GUIDE ASSY / L.H. DOOR From 2-7832	1				
61	502780	. SCREW CAP HEX M8-1.25x25 SS BK	1				

From Y-7046 To 6-8906		Date:07/2024	PAGE:Y2-1864-80

BAGGAGE DOOR - W.C.L."RICON"

Item#	Part	Description	XLII 45	XLII MTH40	XLII MTH45	XLII MTH45E	NOTES
62	500270	. WASHER FL .406x1.000x.063 SS	2				
63	500868	. NUT HEX NYRT M8-1.25 Z050	1				
64	502568	. SCREW MA PAN PH M6-1.0x20 EMN	1				
65	502511	. NUT HEX NYRT M6-1.0 Z050	1				
65	502573	. WASHER FL 6.4x12.5x1.6 SS	3				
66	5001216	. SCREW CAP HEXF SERR 5/16-18x1 ZP To 4-8278	4				
66	955297	. SCREW CAP HEX M8-1.25x25 G8.8 ZG603 From 4-8279	4				
NS	500321	. WASHER BEL SPR .331x.827x.098 N500 From 4-8279	4				
67	482289	. STRIKER CATCH To 2-7831	1				
67	483599	. STRIKER CATCH From 2-7832 To 4-8278	2				
67	483799	. STRIKER CATCH L.H. From 4-8279	2				
68	481131	. SHIM 2" X 1"1/8 / HINGE SUPPORT	6				
69	482330	. WEATHERSTRIP / W/60" HINGE BAGGAGE DOOR	1				
69	485631	. WEATHERSTRIP / W/60" HINGE BAGGAGE DOOR	1				
70	475067	. BRACE	1				
71	474913	. MOULDING / WEATHERSTRIP RETAINER / W/W.C.L.	1				
72	500611	. SCREW TC PAN PH #10-24x1/2 Z050	2				
80	**Y2-1855-00**	**. RUB RAIL - EXTERIOR CREST & TRIMS**	1				
81	N.P.N.	. SUPPORT WELDED TO STRUCTURE	1				4
		A) BUS WITH FLUTED LOWER PANELING					
		4) NO PARTS NUMBER					

		Date:07/2024	PAGE:Y2-1864-90
BAGGAGE DOOR - W/"SLIDE-OUT" INSTALLATION			

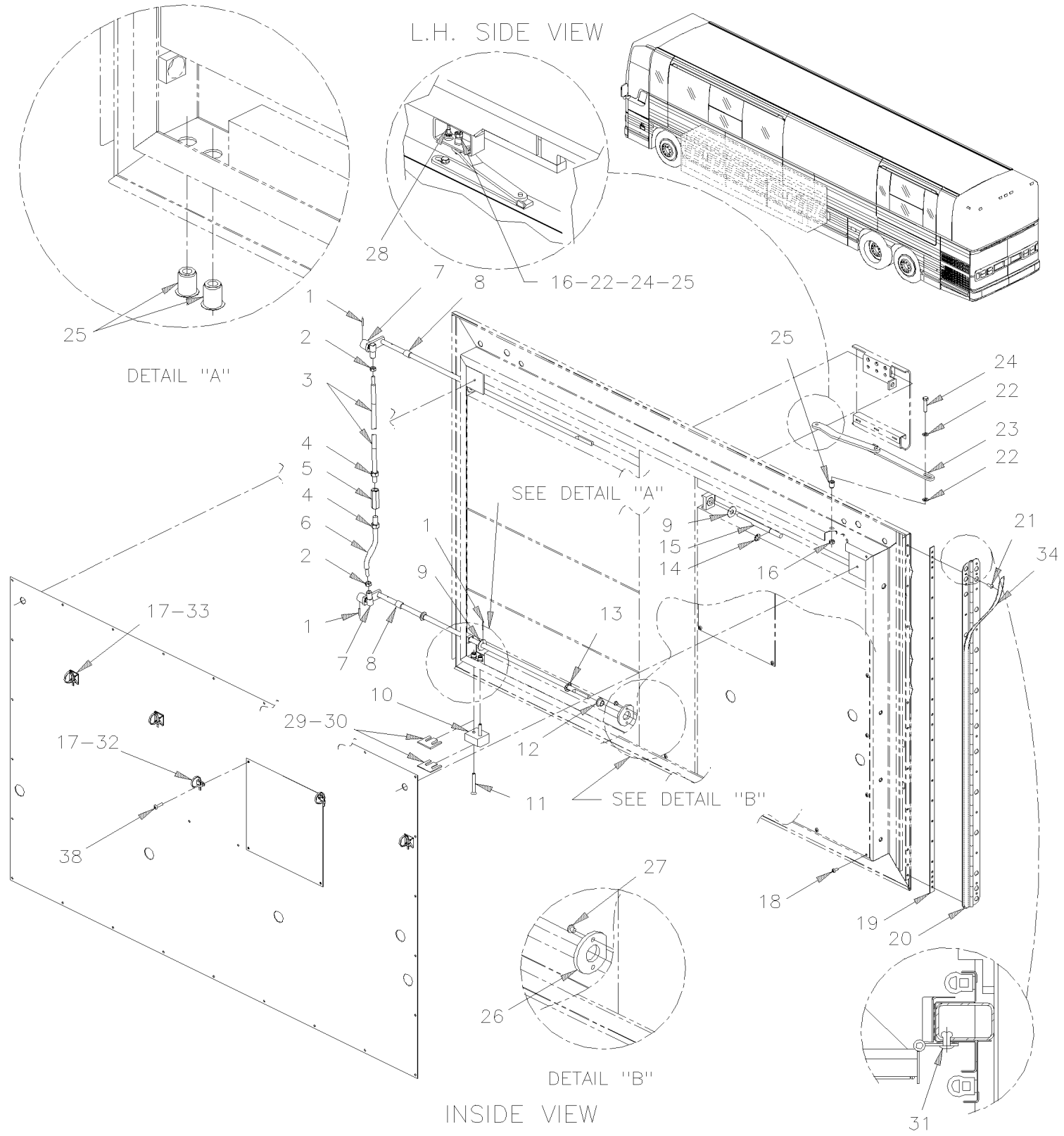

		Date:07/2024	PAGE:Y2-1864-90

BAGGAGE DOOR - W/"SLIDE-OUT" INSTALLATION

Item#	Part	Description	XLII 45	XLII MTH40	XLII MTH45	XLII MTH45E	NOTES
	690399	BAGGAGE DOOR ASSY 60" / W/SLIDE OUT			2		
	690400	BAGGAGE DOOR ASSY 53" / W/SLIDE OUT			1		
1	690265	. SPRING PIN			3		
2	690281	. NUT HEX 1/4-28 SS			2		
3	N.S.P.	. L.H. CLOSING ARM (0100341) To TODAY			1		2
3	690122	. L.H. CLOSING ARM From FUTUR			1		
4	500783	. NUT HEX 3/8-16 Z050			2		
5	N.S.P.	. NUT HEX CPG ZP 3/8-16 UNC / (5000083) To TODAY			1		2
5	690123	. L.H. & R.H. COUPLING NUT From FUTUR			1		
6	690029	. CLOSING ARM			1		
7	690030	. BALL JOINT			2		
8	690292	. SPACER, BUTTITE ROLLER			2		
9	690011	. WASHER FL 3/8 SS			2		
10	690119	. BLOCK			1		
11	690282	. SCREW CAP FL HEXS M6-1.0x50 SS EMN			2		
12	507260	. BUSHING NYLINER W/SHOULDER .375x.437x.375x.594			1		
13	690269	. NUT SPR PO RND 3/8			1		
14	N.S.P.	. RING, RETAINING EXT. S/S 3/8" / (5000160)			1		2
15	690027	. REPLACEMENT ROD			1		
16	502511	. NUT HEX NYRT M6-1.0 Z050			2		
17	N.S.P.	. CABLE CLAMP / (5000073) To 1-7353			AR		2
17	504015	. CABLE TIE / 3/16" X 14"1/2 From 1-7354			5		
18	504347	. RIVET POP DOME OE 3/16x1/4 AL			28		
19	690094	. SPACER			1		
20	690116	. HINGE			1		
21	504352	. RIVET POP DOME OE 3/16x7/8 AL			24		
22	5001462	. WASHER FL 6.4x18.0x1.6 Z050			4		
23	281445	. GUIDE ASSY / R.H. DOOR			1		
24	502533	. SCREW CAP HEX M6-1.0x30 G8.8 Z050			2		
25	690259	. NUT INS TYPE "A-L" OE M6-1.0 0.7-4.2 ZP			4		
26	690009	. WASHER			1		
27	504107	. RIVET POP DOME OE 1/8x5/16 AL			2		
28	690274	. SCREW TC CAP HEXW TEKS #10-16x1/2 ZP			2		
29	690230	. SPACER 1/8"			AR		
30	690231	. SPACER 1/16"			AR		
31	504440	. RIVET POP DOME OE 3/16x7/16 AL			AR		
32	690276	. SCREW APPLIED MOUNTS			2		
33	690293	. 4 WAY ADHESIVE BRACKED MOUNT			3		
34	5061020	. TAPE RUB ADH1 CC POL 1/32" x 1/2" x 50' / BLACK H1C-N			AR		
NS	690353	. GLUE EPOXY CIBA			AR		
NS	682176	. SEALANT SIKA #221 / BLACK / 310ml CARTRIDGE			AR		
NS	N25539	. THREAD LOCKER LOCTITE #262 / RED / 250ml			AR		

		Date:07/2024	PAGE:Y2-1864-90

BAGGAGE DOOR - W/"SLIDE-OUT" INSTALLATION

Item#	Part	Description	XLII 45	XLII MTH40	XLII MTH45	XLII MTH45E	NOTES
38	690262	. SCREW TP PAN PH #10x3/4" ZP			2		
38	500658	. SCREW TC PAN PH #10-24x3/4 Z050			2		
		2) NOT SOLD BY PREVOST (SEE MANUFACTURING PART NUMBER AT END OF DESCRIPTION LINE)					

		Date:07/2024	PAGE:Y2-1864-91
BAGGAGE DOOR - W/"SLIDE-OUT" INSTALLATION			

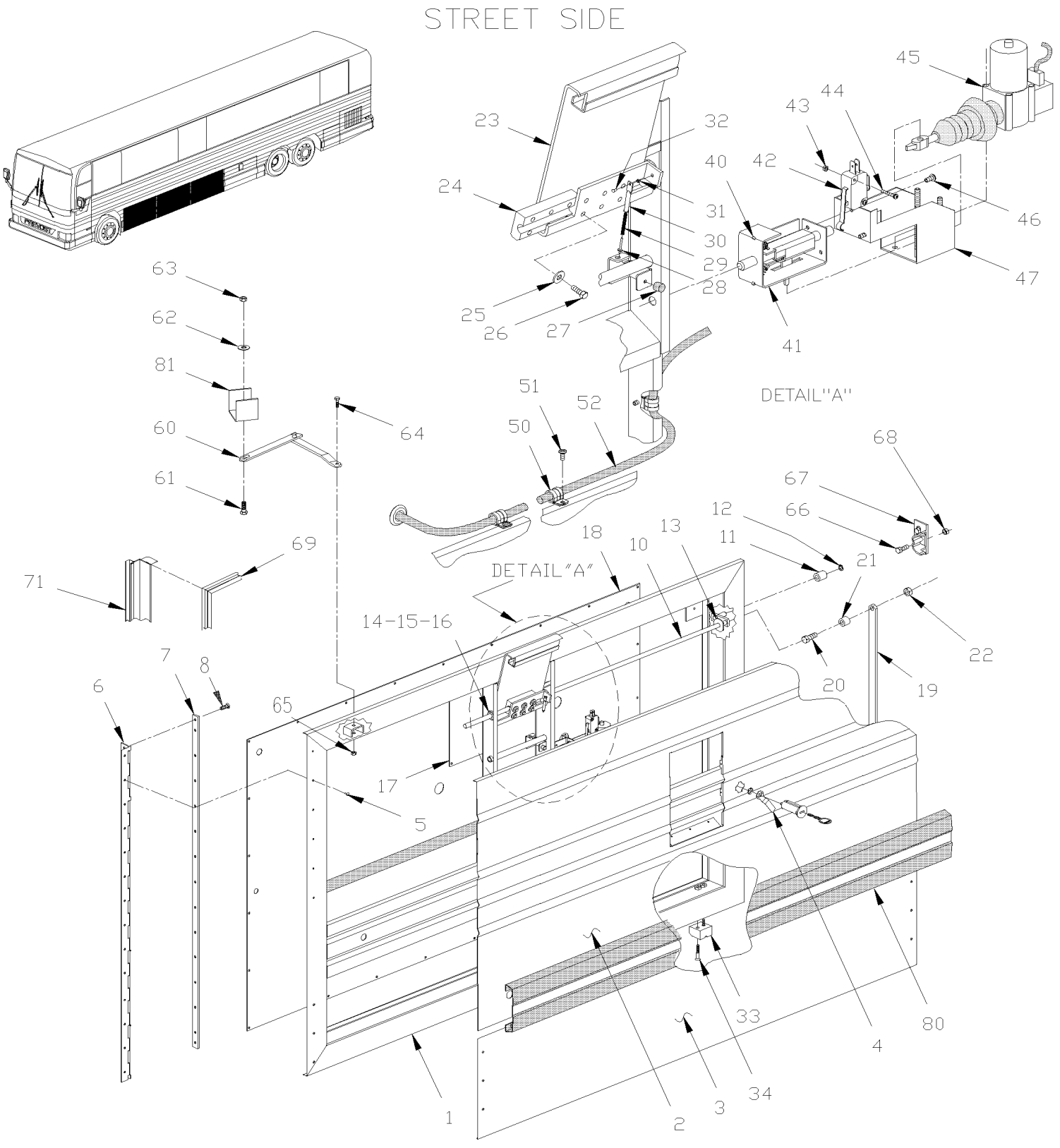

		Date:07/2024	PAGE:Y2-1864-91
BAGGAGE DOOR - W/"SLIDE-OUT" INSTALLATION			

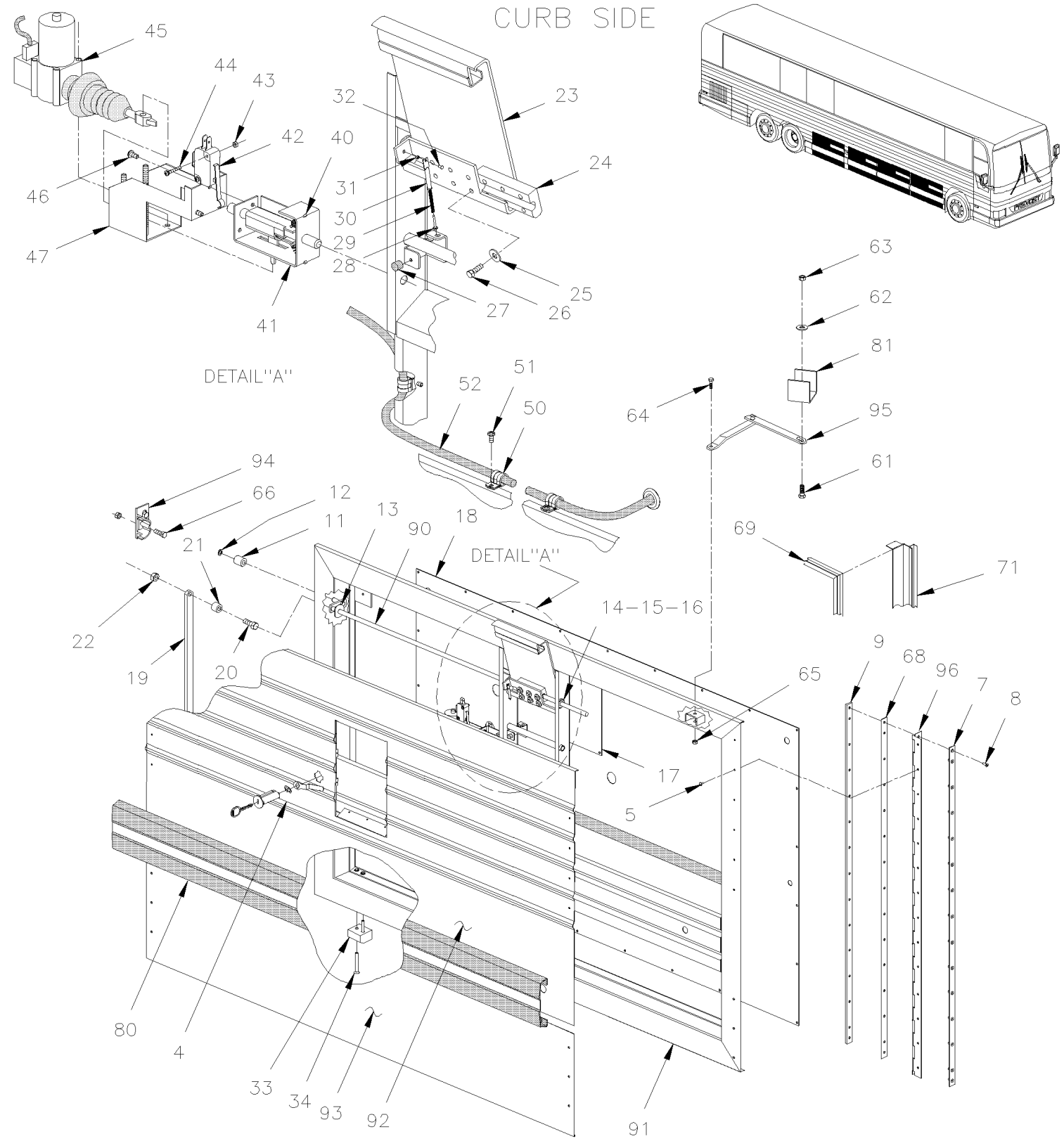

		Date:07/2024	PAGE:Y2-1864-91

BAGGAGE DOOR - W/"SLIDE-OUT" INSTALLATION

Item#	Part	Description	XLII 45	XLII MTH40	XLII MTH45	XLII MTH45E	NOTES
		ALL DOORS ASSY DO NOT INCLUDE					
		RUB-RAIL PLEASE ORDER SEPARATELY					
	485409	BAGGAGE DOOR ASSY 45"		2			A
	483472	BAGGAGE DOOR ASSY 45"		2			B
	483650	BAGGAGE DOOR ASSY 60" / W/SLIDE OUT			AR		A
	483475	BAGGAGE DOOR ASSY 60" / W/SLIDE OUT			AR		C
	483649	BAGGAGE DOOR ASSY 53" / W/SLIDE OUT		1	1	1	A
	483474	BAGGAGE DOOR ASSY 53" / W/SLIDE OUT		1	1	1	C
	483649	BAGGAGE DOOR ASSY 53" / W/SLIDE OUT		2	2	2	A
	483474	BAGGAGE DOOR ASSY 53" / W/SLIDE OUT		2	2	2	C
1	483415	. FRAME ASSY 60"			1		
1	483699	. FRAME ASSY 45" To 3-8109		1			
1	483738	. FRAME ASSY 45" From 3-8110		1			
1	483465	. FRAME ASSY 53" To 3-8109			1		
1	483732	. FRAME ASSY 53" From 3-8110		1	1	1	
2	483445	. UPPER PANEL / 60" / S.B. To 5-8468			1		
2	483857	. UPPER PANEL / 60" / B.A. From 5-8469			1		
2	483953	. UPPER PANEL / 60" / B.A. From 5-8457			1		V
2	483705	. UPPER PANEL / 45" / S.B. To 5-8468		1			
2	483929	. UPPER PANEL / 45" / B.A. From 5-8469		1			
2	483654	. UPPER PANEL / 53" / S.B. To 5-8468			1		
2	483866	. UPPER PANEL / 53" / B.A. From 5-8469		1	1	1	
3	483463	. LOWER PANEL 60" / S.B. To 5-8468			1		
3	483903	. LOWER PANEL 60" / B.A. From 5-8469			1		
3	483706	. LOWER PANEL 45" / S.B. To 5-8468		1			
3	483930	. LOWER PANEL 45" / B.A. From 5-8469		1			
3	483655	. LOWER PANEL 53" / S.B. To 5-8468			1		
3	483911	. LOWER PANEL 53" / B.A. From 5-8469		1	1	1	
3	483659	. LOWER PANEL 53" W / 1.09 SQF PERFORATED / S.B. To 5-8468			1		
3	483912	. LOWER PANEL 53" W/1.09 SQF PERFORATED / B.A. From 5-8469		1	1	1	
NS	504272	. RIVET CHY Q BRAZ 3/16x1/8 SS		6	6	6	
4	281498	. PIVOT LOCK 3/8" OFFSET		1	1	1	
5	504272	. RIVET CHY Q BRAZ 3/16x1/8 SS		18	18	18	
6	483442	. HINGE		1	1	1	
NS	483606	. SUPPORT, HINGE / THIN 844.5MM LG		1	1	1	
7	481047	. HINGE PLATE 31"1/16 W/ 5 HOLES 1/4-28 To 2-7831			1		
7	483638	. HINGE PLATE 31"1/16 W/ 5 HOLES 1/4-28 From 2-7832		1	1	1	
NS	483610	SHIM 18GA SS / 131MM X 29MM		3	3	3	
8	500316	SCREW MA FL PH 1/4-28x3/4 SS		5	5	5	
10	483446	. ROD ASSY LOCK W/60" To 2-7831			2		

		Date:07/2024	PAGE:Y2-1864-91

BAGGAGE DOOR - W/"SLIDE-OUT" INSTALLATION

Item#	Part	Description	XLII 45	XLII MTH40	XLII MTH45	XLII MTH45E	NOTES
10	483677	. ROD ASSY LOCK W/60" From 2-7832 To 3-8109			2		
10	483670	. ROD ASSY LOCK W/60" From 3-8110 To 5-8494			2		
10	483447	. . ROD LOCK W/60" To 2-7831			1		
10	483675	. . ROD LOCK W/60" From 2-7832 To 3-8109			1		
10	483669	. . ROD LOCK W/60" From 3-8110 To 5-8494			2		
10	485424	. . ROD LOCK W/60" From 5-8495			2		
10	483498	. ROD ASSY LOCK W/53" To 2-7831			2		
10	483678	. ROD ASSY LOCK W/53" From 2-7832 To 3-8109		2	2		
10	483668	. ROD ASSY LOCK W/53" From 3-8110 To 5-8494		2	2		
10	483499	. . ROD LOCK W/53" To 2-7831		1	1		
10	483676	. . ROD LOCK W/53" From 2-7832 To 3-8109		1	1		
10	483667	. . ROD LOCK W/53" From 3-8110 To 5-8494		1	1		
10	485427	. . ROD LOCK W/53" From 5-8495		2	2	2	
10	483702	. ROD ASSY LOCK W/45" To 3-8109		2			
10	483657	. ROD ASSY LOCK W/45" From 3-8110 To 5-8494		2			
10	483703	. . ROD LOCK W/45" To 3-8109		1			
10	483656	. . ROD LOCK W/45" From 3-8110 To 5-8494		1			
10	485425	. . ROD LOCK W/45" From 5-8495		2			
11	483366	. ROLLER To 2-7831			1		
11	483636	. ROLLER From 2-7832		1	1	1	
12	504318	. RING RETAINER / EXT .375 x .352 x .025		1	1	1	
13	505520	. SPACER 3/8 I.D. X 5/8 LG		2	2	2	
NS	507254	. BUSHING NYLINER W/SHOULDER		1	1	1	
14	504650	. GROMMET / .375x.625x.062x.313x.875		2	2	2	
15	507260	. BUSHING NYLINER W/SHOULDER .375x.437x.375x.594		2	2	2	
16	5001011	. WASHER FL .406x.625x.040 Z050		4	4	4	
16	502102	. PIN, COTTER 1/8 x 1		2	2	2	
17	481787	. PANEL ACCESS 9" X 9"		1	1	1	
NS	500582	. SCREW TP PAN PH #8x3/8 Z050		4	4	4	
18	483538	. PANEL INTERIOR 60" To 5-8358			1		
18	483812	. PANEL INTERIOR 60" From 5-8359			1		
18	483955	. PANEL INTERIOR 60" From 5-8457			1		V
18	483560	. PANEL INTERIOR 53" To 5-8358		1	1		
18	483811	. PANEL INTERIOR 53" From 5-8359		1	1	1	
NS	504347	. RIVET POP DOME OE 3/16x1/4 AL		28	28	28	
NS	504433	. SNAP-IN PLUG / 1.090 O.D.		1	1	1	
19	483356	. ROD TRANSFER To 2-7831			1		
19	483639	. ROD TRANSFER From 2-7832		1	1	1	
20	502625	. SCREW SHR HEXS 5/16x3/8 {1/4-20 To 3-8109		2	2		
21	507301	. BUSHING NYLINER		2	2		
22	502819	. NUT HEX JAM 1/4-20 Z050 To 3-8109		2	2		
22	504689	. RING RETAINER / EXT .312 x .243 x .025 / SS From 3-8110		2	2	2	

		Date:07/2024	PAGE:Y2-1864-91

BAGGAGE DOOR - W/"SLIDE-OUT" INSTALLATION

Item#	Part	Description	XLII 45	XLII MTH40	XLII MTH45	XLII MTH45E	NOTES
23	481358	. HANDLE ASSY / S.B. To 5-8468		1	1		
23	483897	. HANDLE ASSY / B.A. From 5-8469		1	1	1	
24	481011	. RETAINER ROD / HANDLE / CHROMATE To 2-7831			1		
24	483587	. RETAINER ROD / HANDLE / E-COAT BLACK From 2-7832		1	1	1	
25	500473	. WASHER LO SPT .262x.489x.062 Z050		6	6	6	
26	500163	. SCREW CAP HEX 1/4-20x3/4 G5 Z050		6	6	6	
27	504334	. BUMPER RUBBER / .625 OD x .406 TH x .156 HOLE		1	1	1	
NS	504339	. RIVET POP DOME OE 1/8x3/8 SS		2	2	2	
28	481007	. ROD ASSY MALE		1	1	1	
29	480394	. SPRING COMPRESSION / .355 O.D. 3.375 x .063		1	1	1	
30	481227	. ROD FEMALE		1	1	1	
31	481012	. BUSHING LEVER		1	1	1	
32	504459	. RIVET MGLP PRDG 1/4x3/8 SS		1	1	1	
NS	502573	. WASHER FL 6.4x12.5x1.6 SS		1	1	1	
33	483690	. DOOR SUPPORT NYLON 22.3MM 29MM 38.1MM To 3-8109		1	1	1	
33	483674	. DOOR SUPPORT NYLON 25.4MM 25.4MM 38.1MM From 3-8110		1	1	1	
33	483222	. SHIM 18GA 35MM x 38.1MM SS To 3-8109		AR	AR	AR	
33	483742	. SHIM 18GA 25.4MM x 38.1MM SS From 3-8110		AR	AR	AR	
34	500368	. SCREW MA FL SLT 1/4-20x1 1/2 Z050		2	2	2	
40	481564	. ROD GUIDE		2	2	2	
41	502151	. SPRING COMPRESSION / .300 O.D. x 1 x .032		2	2	2	
42	562096	. MICRO SWITCH		1	1	1	
43	502579	. NUT HEX M3-0.5 NP		4	4	4	
44	502577	. SCREW MA PAN PH M3-0.5x16 ZP		2	2	2	
45	780428	. LOCK ACTUATOR / 12V		1	1	1	
. NS	562076	. . CONNECTOR / PACK-CON I / FEMALE HOUSING / 2C / PED 8911772		1	1	1	
45	**2810382**	**. ACTUATOR SERVICE KIT**		1	1	1	
46	500883	. SCREW TC PAN PH #8-32x3/8 Z050		6	6	6	
47	482109	. BRACKET / TO FIX LOCK ACTUATOR		1	1	1	
50	560481	. CLAMP / 5/8" I.D.		3	3	3	
51	500883	. SCREW TC PAN PH #8-32x3/8 Z050		AR	AR	AR	
52	062796	CABLE ASSY / ACTUATOR POWER / EACH DOOR To 7-9095		1	1	1	
52	067002	CABLE ASSY / ACTUATOR POWER / EACH DOOR From 7-9096		1	1	1	
52	066658	CABLE ASSY / TO STRETCH ACTUATOR CABLE ABOVE 1350MM		1	1	1	
60	281445	GUIDE ASSY / R.H. DOOR To 2-7831			1		
60	288031	GUIDE ASSY / R.H. DOOR From 2-7832		1	1	1	
61	502780	SCREW CAP HEX M8-1.25x25 SS BK		1	1	1	
62	500270	WASHER FL .406x1.000x.063 SS		2	2	2	
63	500868	NUT HEX NYRT M8-1.25 Z050		1	1	1	
64	502737	SCREW CAP HEX M6-1.0x25 SS BK		1	1	1	
65	502511	NUT HEX NYRT M6-1.0 Z050		1	1	1	
65	502573	WASHER FL 6.4x12.5x1.6 SS		3	3	3	

		Date:07/2024	PAGE:Y2-1864-91

BAGGAGE DOOR - W/"SLIDE-OUT" INSTALLATION

Item#	Part	Description	XLII 45	XLII MTH40	XLII MTH45	XLII MTH45E	NOTES
66	955297	SCREW CAP HEX M8-1.25x25 G8.8 ZG603		4	4	4	
NS	500321	WASHER BEL SPR .331x.827x.098 N500		4	4	4	
67	482289	STRIKER CATCH To 2-7831			1		
67	483599	STRIKER CATCH From 2-7832 To 5-8494		1	1		
67	485429	STRIKER CATCH R.H. From 5-8495		1	1	1	
NS	483730	SHIM 14GA 73.2MM x 38.1MM SS		AR	AR	AR	
NS	284059	SHIM WASHER SS 18GA 32MM O.D. x 14MM I.D.		AR	AR		
68	5001337	NUT INS FL HEX M8-1.25 0.5-3.0 Z050		4	4		
69	482330	WEATHERSTRIP / W/60" HINGE BAGGAGE DOOR			1		
69	485631	WEATHERSTRIP / W/60" HINGE BAGGAGE DOOR			1		
69	483692	WEATHERSTRIP / W/45" HINGE BAGGAGE DOOR		1			
69	485633	WEATHERSTRIP / W/45" HINGE BAGGAGE DOOR		1			
69	483462	WEATHERSTRIP / W/53" HINGE BAGGAGE DOOR		1	1	1	
69	485632	WEATHERSTRIP / W/53" HINGE BAGGAGE DOOR		1	1	1	
71	475297	MOULDING / WEATHERSTRIP RETAINER To 3-8109		1	1		
71	476077	MOULDING / WEATHERSTRIP RETAINER From 3-8110		1	1	1	
NS	500611	SCREW TC PAN PH #10-24x1/2 Z050		2	2	2	
80	**Y2-1855-00**	**RUB RAIL - EXTERIOR CREST & TRIMS**		1	1	1	
81	N.P.N.	SUPPORT WELDED TO STRUCTURE		1	1	1	4
		NEXT FOLLOWING ITEMS ARE RELATED					
		WITH HINGED DOORS CURBSIDE INSTALLATION					
89	Call order desk	BAGGAGE DOOR ASSY 60" / W/HINGE CURBSIDE			AR		P C
89	485622	BAGGAGE DOOR ASSY 53" / W/HINGE CURBSIDE		AR	AR	AR	D
90	483787	ROD LOCK / 60"			2		
90	484004	ROD LOCK / 53"		2	2	2	
91	484075	FRAME ASSY 60"			1		
91	484078	FRAME ASSY 53"		1	1	1	
92	485444	UPPER PANEL / CURBSIDE DOOR W/HINGE 60" / B.A. To 6-8805			1		
92	484090	UPPER PANEL / CURBSIDE DOOR W/HINGE 60" / B.A. From 6-8806			1		
92	484001	UPPER PANEL / CURBSIDE DOOR W/HINGE 53" / B.A. To 6-8805		1	1	1	
92	484089	UPPER PANEL / CURBSIDE DOOR W/HINGE 53" / B.A. From 6-8806		1	1	1	
92	485457	UPPER PANEL 53" W/1.51 SQF PERFORATED AREA / B.A.		1	1	1	
93	485443	LOWER PANEL 60" / B.A.			1		
93	484000	LOWER PANEL 53" / B.A.		1	1	1	
93	485456	LOWER PANEL 53" W/1.09 SQF PERFORATED / B.A.		1	1	1	
94	483799	STRIKER CATCH L.H.		2	2	2	
95	281912	GUIDE ASSY / L.H. DOOR		1	1	1	
96	484086	HINGE curbside		1	1	1	

		Date:07/2024	PAGE:Y2-1864-91

BAGGAGE DOOR - W/"SLIDE-OUT" INSTALLATION

Item#	Part	Description	XLII 45	XLII MTH40	XLII MTH45	XLII MTH45E	NOTES
		A) DOOR ASSY W/OUT PREFORATED PANEL					
		B) SERVICE NUMBER SPECIFIED "UPPER AND LOWER PANEL". SEE CONVERTER BAGGAGE BOOK PA-1108 AT SECTION #19					
		C) SERVICE NUMBER SPECIFIED "UPPER AND LOWER PANEL". SEE CONVERTER BAGGAGE BOOK PA-1108 AT SECTION #10					
		D) MOUNTED WITH PLAIN 2 PANELS W/O VENTILATION					
		V) USE WITH "VORALD" SYSTEM					
		4) NO PARTS NUMBER					
		P) CALL ORDER DESK FOR SPECIFIC APPLICATION (V.I.N.)					

From Y-7046 To 1-7680		Date:07/2024	PAGE:Y2-1865-00
FLOOR BAGGAGE COMPARTMENT - BUS			

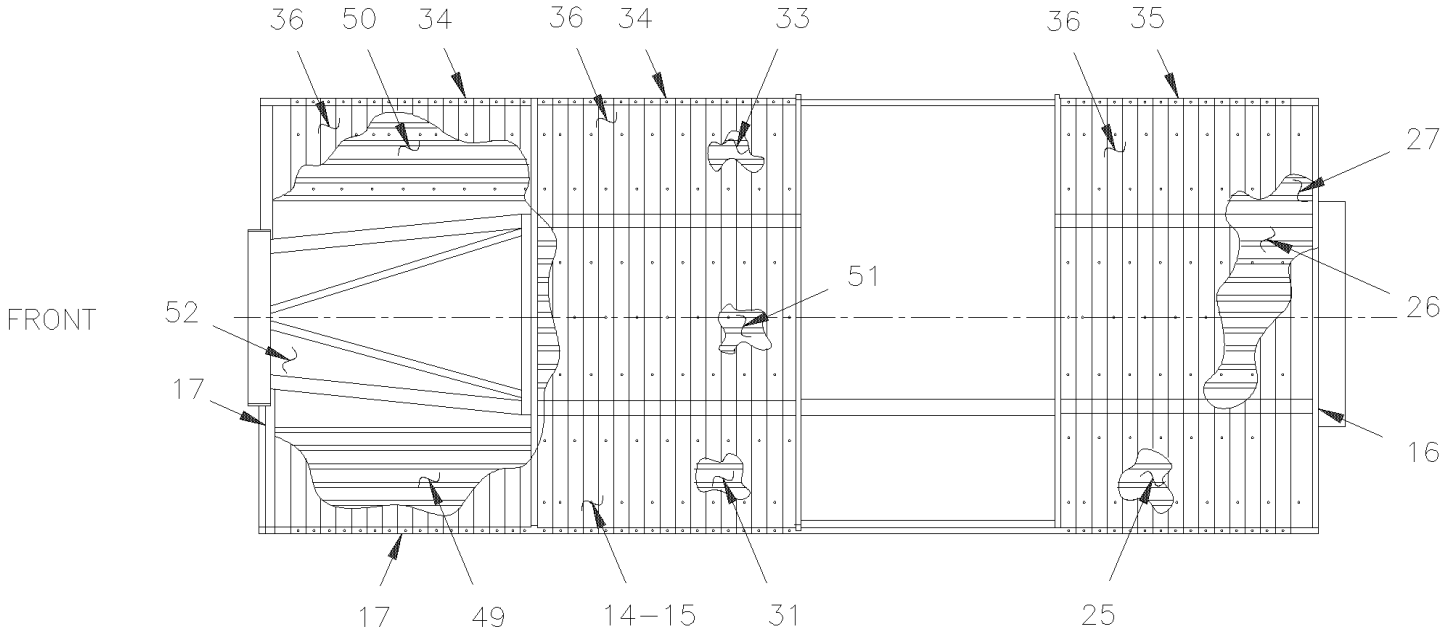

BUS – W/IND SUSPENSION

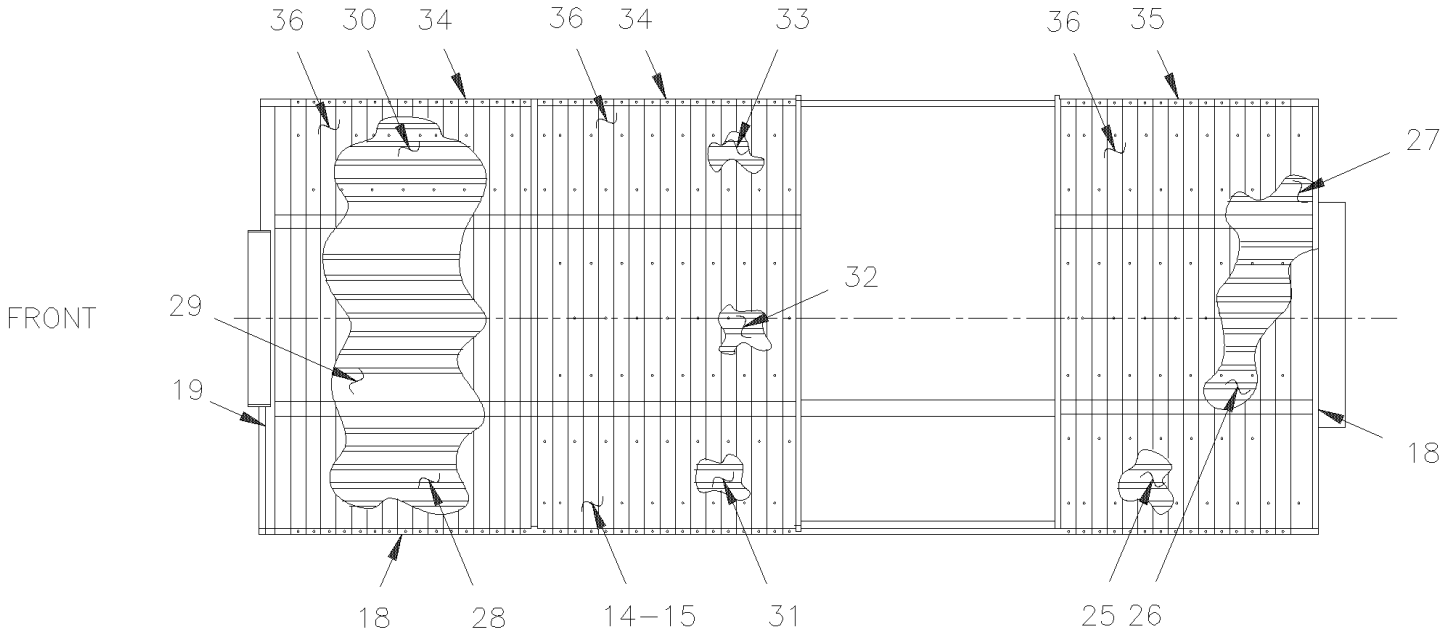

BUS – W/RIGID SUSPENSION

From Y-7046 To 1-7680		Date:07/2024	PAGE:Y2-1865-00

FLOOR BAGGAGE COMPARTMENT - BUS

Item#	Part	Description	XLII 45	XLII MTH40	XLII MTH45	XLII MTH45E	NOTES
14	505409	RIVET COLLAR HUCK 3/16	AR				
15	505408	PIN MAGNA-GRIP 3/16 SS	AR				
16	504127	RIVET POP DOME OE 3/16x3/4 AL	AR				
17	504487	RIVET MGLP PRDG 3/16x7/16 SS	AR				
18	504610	RIVET MGLP PRDG 1/4x5/8 SS	AR				
19	504459	RIVET MGLP PRDG 1/4x3/8 SS	AR				
25	483303	PANEL UNDERFLOOR REAR L.H.	1				
26	483300	PANEL UNDERFLOOR REAR CENTER	1				
27	483297	PANEL UNDERFLOOR REAR R.H.	1				
28	483082	PANEL UNDERFLOOR FRONT L.H. / 1ST BAY	1				
29	483083	PANEL UNDERFLOOR FRONT CENTER	1				
30	483081	PANEL UNDERFLOOR FRONT R.H. / 1ST BAY	1				
31	482254	PANEL UNDERFLOOR FRONT L.H. / 2ND BAY	1				
32	483216	PANEL UNDERFLOOR FRONT CENTER / 2ND BAY	1				
33	482250	PANEL UNDERFLOOR FRONT R.H. / 2ND BAY	1				
34	482248	MOULDING SS / FLOOR PANEL & STRUCTURE 1537MM	4				
35	482249	MOULDING SS / FLOOR PANEL & STRUCTURE 1530MM	2				
36	482239	PANEL FLOOR / BAGGAGE COMPARTMENT	3				
49	483231	PANEL UNDERFLOOR FRONT L.H. / 1ST BAY	1				
50	483232	PANEL UNDERFLOOR FRONT R.H. / 1ST BAY	1				
51	482386	PANEL UNDERFLOOR FRONT CENTER / 2ND BAY	14				
52	483240	PANEL UNDERFLOOR FRONT CENTER / 1ST BAY	1				
53	504339	RIVET POP DOME OE 1/8x3/8 SS	1				

From 1-7681 To 6-8906		Date:07/2024	PAGE:Y2-1865-01
FLOOR BAGGAGE COMPARTMENT - BUS			

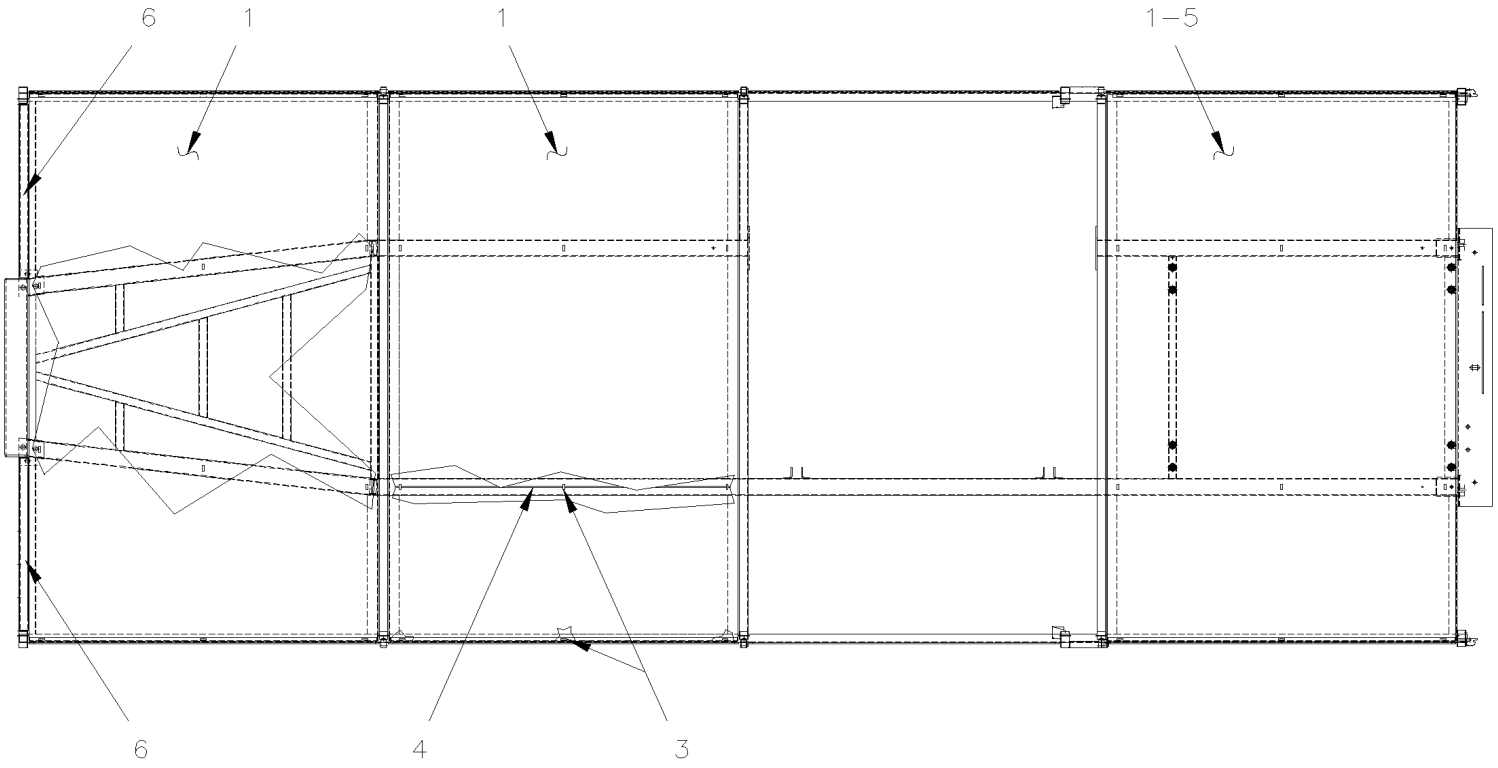

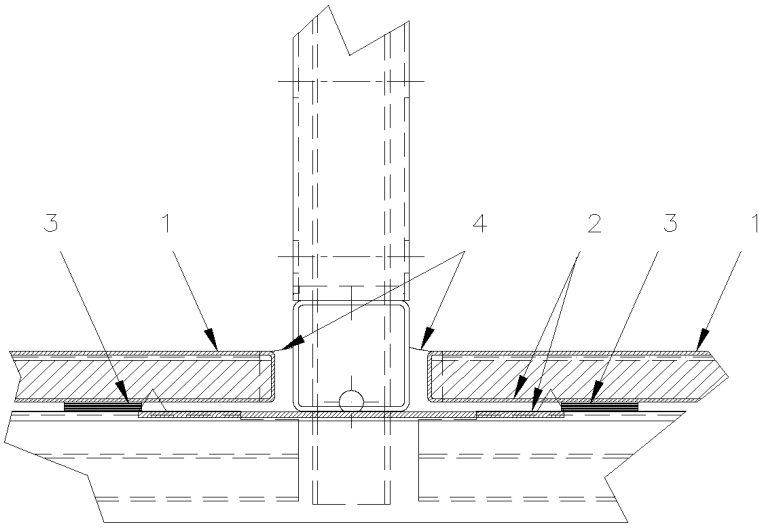

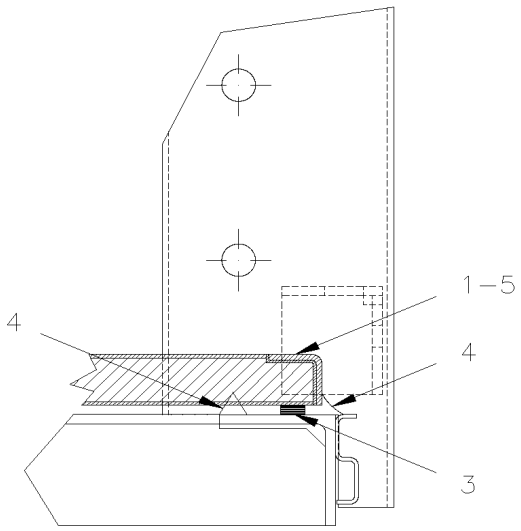

From 1-7681 To 6-8906		Date:07/2024	PAGE:Y2-1865-01

FLOOR BAGGAGE COMPARTMENT - BUS

Item#	Part	Description	XLII 45	XLII MTH40	XLII MTH45	XLII MTH45E	NOTES
1	483450	BAGGAGE FLOOR PANEL	3				
. NS	485720	. MODLING SS	2				
2	683097	CLEANER SIKA #205 / CLEAR / 1000ml	AR				
3	790392	RUBBER BLOCK ADJUSTEMENT 1" x 5/16" x 1/8" 80DURO	36				
4	683084	SEALANT SIKA #221 / GREY / 600 ml SAUSAGE	AR				
5	483451	BAGGAGE FLOOR PANEL / W/W.C.L. To 4-8278	1				W
5	483775	BAGGAGE FLOOR PANEL / W/W.C.L. From 4-8279	1				W
6	482403	CHANNEL "U" 793MM / SS	2				A
6	482404	CHANNEL "U" 704MM / SS	2				A
		A) WITH INDEPENDANT SUSPENSION					
		W) WITH W.C.L. ONLY					

From Y-7046 To 6-8906		Date:07/2024	PAGE:Y2-1865-10
SEPARATOR PANEL - BAGGAGE COMPARTMENT - BUS			

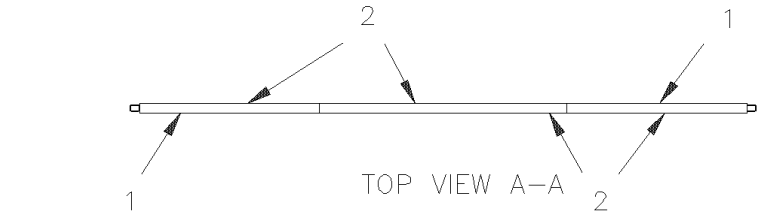

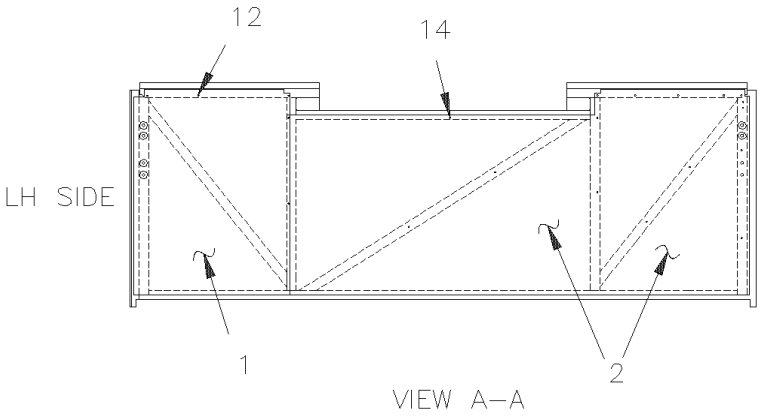

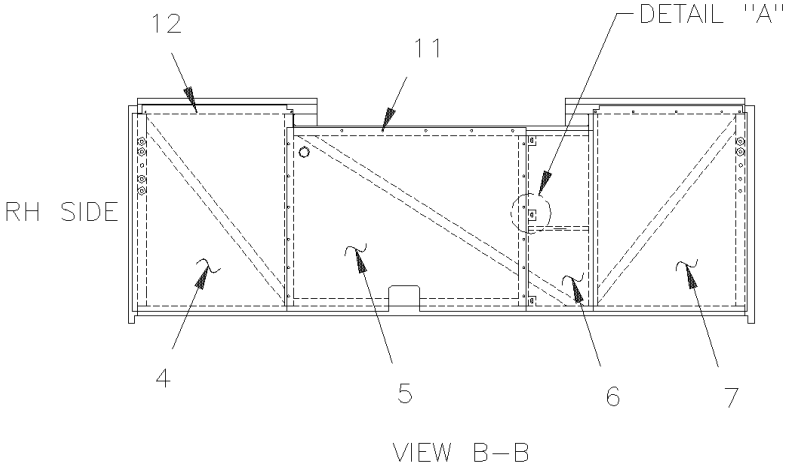

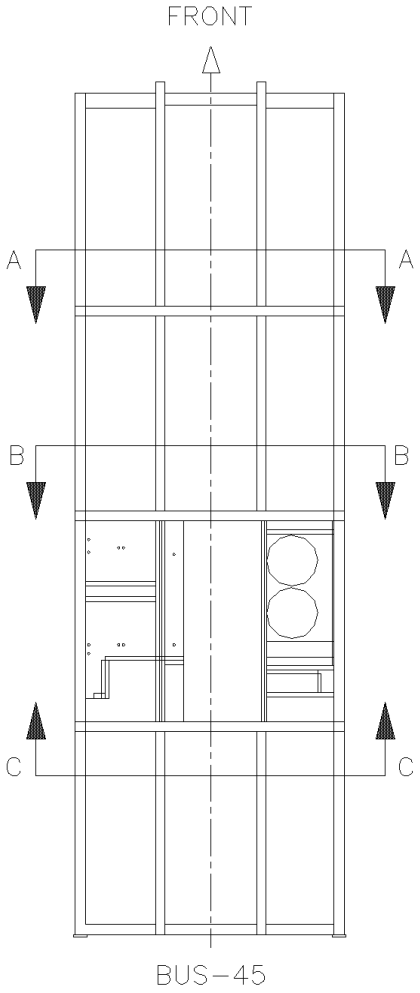

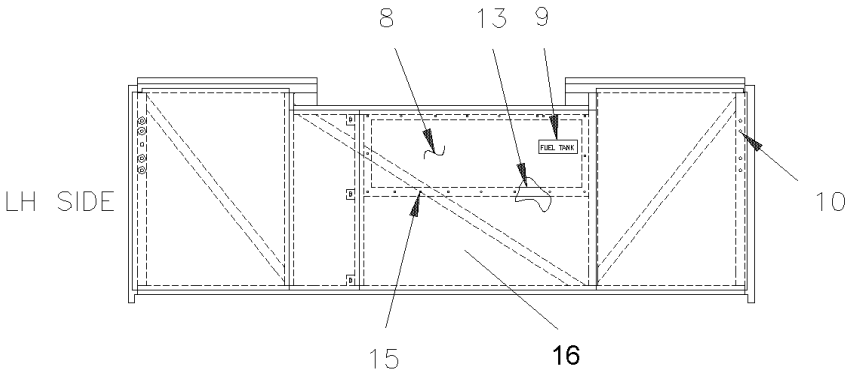

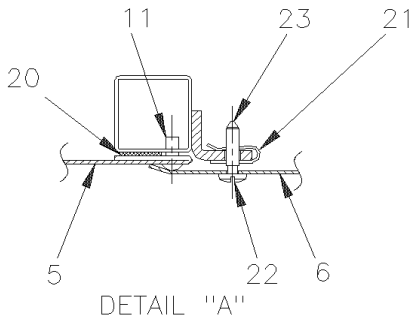

From Y-7046 To 6-8906		Date:07/2024	PAGE:Y2-1865-10

SEPARATOR PANEL - BAGGAGE COMPARTMENT - BUS

Item#	Part	Description	XLII 45	XLII MTH40	XLII MTH45	XLII MTH45E	NOTES
1	482468	PANEL SIDE SEPARATOR To 1-7680	2				
1	483421	PANEL SIDE SEPARATOR From 1-7681	1				
2	483111	PANEL SIDE & CENTER SEPARATOR To 1-7680	2				
2	483491	PANEL SIDE & CENTER SEPARATOR From 1-7681	1				
4	483096	PANEL SIDE SEPARATOR To 1-7680	1				
4	483428	PANEL SIDE SEPARATOR From 1-7681	1				
5	480927	PANEL FUEL TANK CLOSING To 5-8486	1				
5	485383	PANEL FUEL TANK CLOSING From 5-8487	1				
6	480929	PANEL DOOR ASSY W/HINGE To 1-7680	1				
6	481193	PANEL DOOR ASSY W/HINGE From 1-7681	1				
6	480928	. HINGE / DOOR PANEL 27 1/8" (689MM)	1				
7	480921	PANEL SIDE SEPARATOR To 1-7680	1				
7	483429	PANEL SIDE SEPARATOR From 1-7681	1				
8	483344	PANEL FUEL TANK ACCESS / RIVETED 270MM x 913MM	1				
8	Call order desk	PANEL FUEL TANK ACCESS	1				P
8	483400	. PANEL FUEL TANK ACCESS 251MM X 898MM	1				A
8	483399	. . HINGE	1				A
8	504363	. STUD 5/16 O.D. X 7/16 (DZUS)	7				A
8	504353	. RETAINER, 5/16"DIA. (DZUS) STUD	7				A
8	504365	SPRING HOOK / DZUS 5/16	7				A
8	504339	RIVET POP DOME OE 1/8x3/8 SS	AR				A
9	031163	DECAL / "FUEL TANK ACCESS" / ENGLISH	1				
9	032561	DECAL / "FUEL TANK ACCESS" / ENGLISH & SPANISH	1				
10	504528	HOLE PLUG BUTTON / .437 O.D. BLACK	10				
11	500657	SCREW TC TR PH #10-24x1/2 Z050	24				
12	504347	RIVET POP DOME OE 3/16x1/4 AL	AR				
13	506268	TAPE RUB ADH1 URE 3/8" x 1/2" x 25' / GREY 1820	AR				
14	506001	TAPE RUB ADH1 CC POL 1/8" x 3/4" x 50' / GREY 2520X	AR				
15	502526	SCREW TC BDG PH #12-24x3/4 Z050	17				
16	483344	PANEL FUEL TANK ACCESS / RIVETED 270MM x 913MM	1				
16	483398	PANEL LOWER	1				A
20	506071	TAPE RUB ADH1 CC POL 1/8" x 1/2" x 50' / GREY 2520X	AR				
21	504377	NUT SPR U 1 1/64x1/2x.109-.161	3				
22	504289	WASHER SPR GRIP .437x.020 AL	3				
23	504376	SCREW FST SLT #12 18x28.2 STL	3				
		A) USE WITH FUEL TANK PANEL ACCESS WITH HINGE					
		P) CALL ORDER DESK FOR SPECIFIC APPLICATION (V.I.N.)					

From Y-7046 To 8-9339		Date:07/2024	PAGE:Y2-1865-20
EVAPORATOR & CONDENSOR WALL			

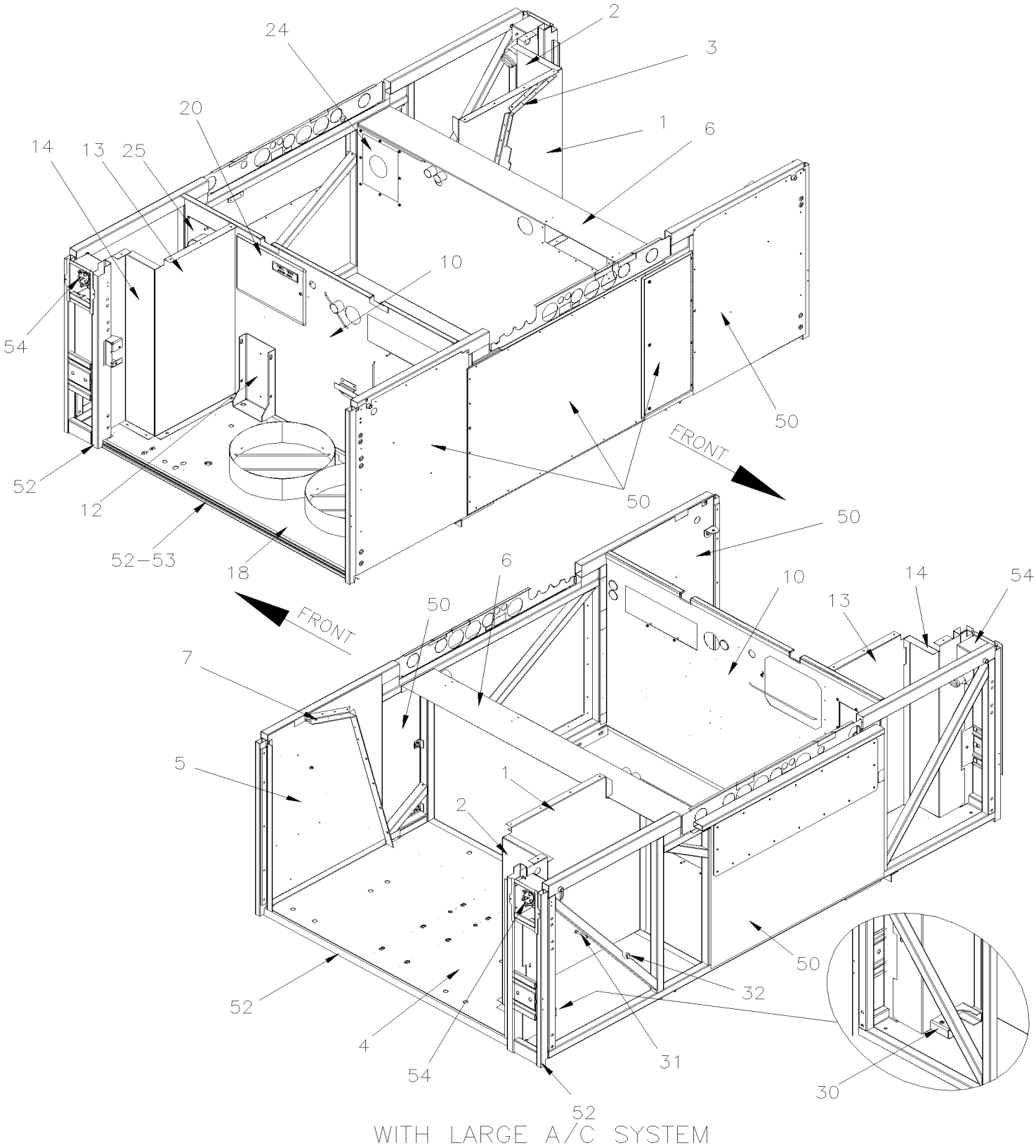

WITH LARGE A/C SYSTEM

From Y-7046 To 8-9339		Date:07/2024	PAGE:Y2-1865-20
EVAPORATOR & CONDENSOR WALL			

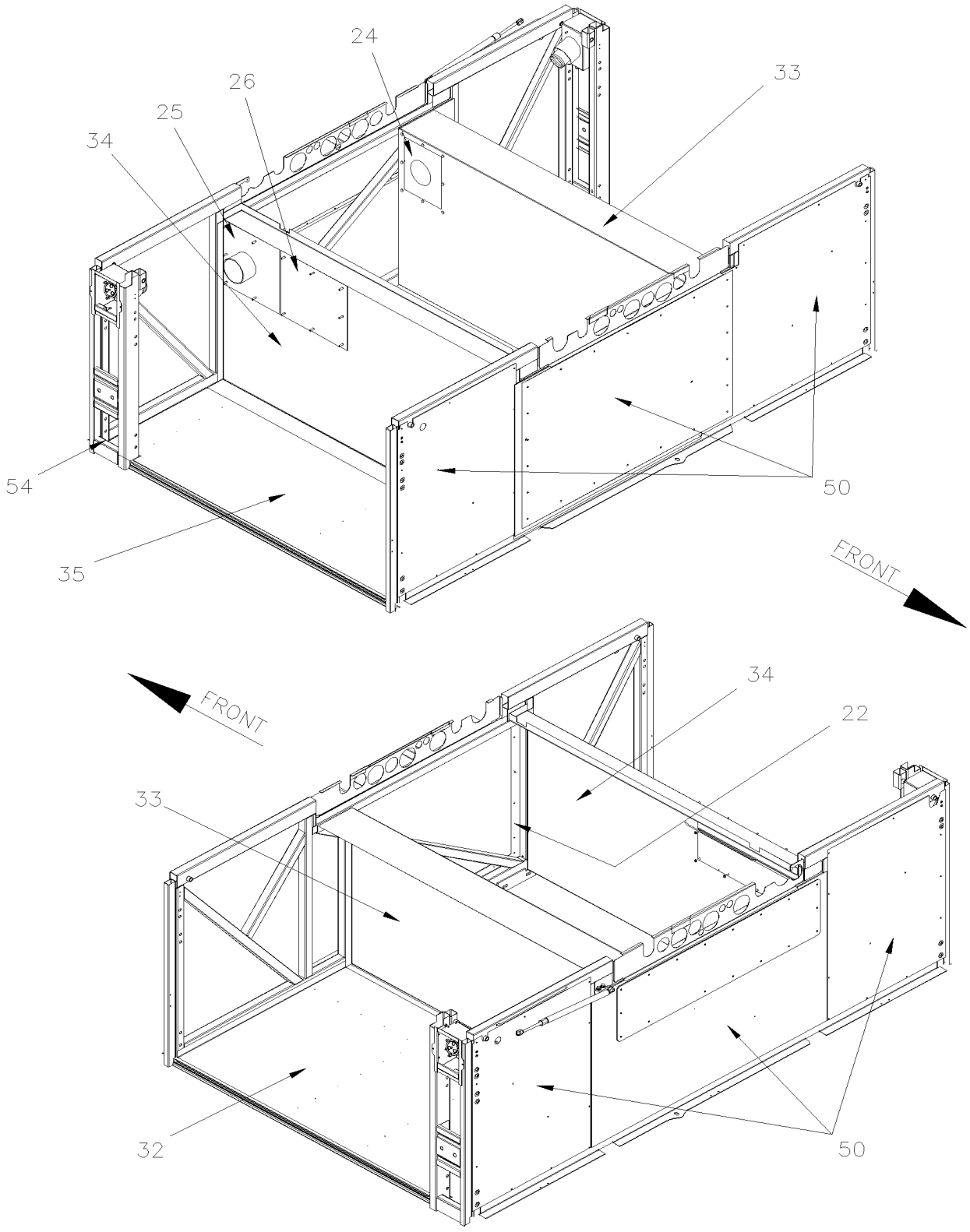

MTH WITH SMALL A/C SYSTEM

From Y-7046 To 8-9339		Date:07/2024	PAGE:Y2-1865-20

EVAPORATOR & CONDENSOR WALL

Item#	Part	Description	XLII 45	XLII MTH40	XLII MTH45	XLII MTH45E	NOTES
1	221073	PANEL EVAPORATOR SEPARATOR BACKWARD	1		1		
1	221174	PANEL EVAPORATOR SEPARATOR BACKWARD / W/W.C.L. "RICON"	1				
1	221187	PANEL EVAPORATOR SEPARATOR BACKWARD / W/"SLIDE-OUT" To 2-7908			1		
1	221265	PANEL EVAPORATOR SEPARATOR BACKWARD / W/"SLIDE-OUT" From 2-7909 To 3-8097			1		
1	221275	PANEL EVAPORATOR SEPARATOR BACKWARD / W/"SLIDE-OUT" From 3-8098			1		
1	482392	PANEL EVAPORATOR WALL BACKWARD		1		1	
2	221125	ANGLE PANEL CLOSING SEPARATOR			1		
3	480859	SUPPORT ANGLE / TO FIX HEATER & EVAPO	1				
3	482029	SUPPORT ANGLE / TO FIX HEATER & EVAPO To 6-8805		1	1	1	
4	482753	EVAPORATOR FLOOR ASSY To 1-7408	1		1		
4	483371	EVAPORATOR FLOOR ASSY From 1-7409	1		1		
4	482742	EVAPORATOR FLOOR ASSY To 1-7408		1		1	
4	483372	EVAPORATOR FLOOR ASSY From 1-7409		1		1	
5	482136	PANEL EVAPORATOR WALL FORWARD	1	1	1	1	
6	214111	REAR VERTICAL PANEL EVAPORATOR	1		1		
6	482356	REAR VERTICAL PANEL EVAPORATOR To 6-8805		1		1	
6	215874	REAR VERTICAL PANEL EVAPORATOR From 6-8806				1	
7	480858	SUPPORT ANGLE / TO FIX HEATER & EVAPO	1				
7	482028	SUPPORT ANGLE / TO FIX HEATER & EVAPO To 6-8805		1	1	1	
10	214174	REAR VERTICAL PANEL CONDENSOR To Y-7307	1		1		
10	214470	REAR VERTICAL PANEL CONDENSOR From Y-7308 To Y-7330	1		1		
NS	214469	ANGLE CLOSING PLATE 102MM From Y-7308	3		3		
10	214506	REAR VERTICAL PANEL CONDENSOR From Y-7331 To 1-7676	1		1		
10	214544	REAR VERTICAL PANEL CONDENSOR From 1-7677 To 3-8128	1		1		
10	215144	REAR VERTICAL PANEL CONDENSOR From 3-8129 To 4-8205	1		1		
10	215295	REAR VERTICAL PANEL CONDENSOR From 4-8206	1		1		
10	214322	REAR VERTICAL PANEL CONDENSOR To 1-7676		1		1	
10	214543	REAR VERTICAL PANEL CONDENSOR From 1-7677 To 3-8128		1		1	
10	215145	REAR VERTICAL PANEL CONDENSOR From 3-8129		1		1	
12	454044	SUPPORT RECEIVER TANK To 4-8205	1	1	1	1	
12	454125	SUPPORT RECEIVER TANK / WELDED TO STRUCTURE From 4-8206	1	1	1	1	
13	482755	PANEL CONDENSOR SEPARATOR BACKWARD To Y-7307	1		1		
13	214494	PANEL CONDENSOR SEPARATOR BACKWARD From Y-7308	1		1		
13	214512	PANEL CONDENSOR SEPARATOR BACKWARD / W/W.C.L. "RICON" To 1-7680	1				
13	213894	PANEL CONDENSOR SEPARATOR BACKWARD / W/W.C.L. "RICON" From 1-7681	1				
14	221124	ANGLE PANEL SEPARATOR	1		1		
14	212771	ANGLE PANEL SEPARATOR / W/W.C.L. "RICON"	1				
18	482747	CONDENSOR FLOOR ASSY 1150MM		1		1	
18	482750	CONDENSOR FLOOR ASSY 1524MM To 4-8205	1		1		
18	485413	CONDENSOR FLOOR ASSY 1524MM From 4-8206			1		

From Y-7046 To 8-9339		Date:07/2024	PAGE:Y2-1865-20

EVAPORATOR & CONDENSOR WALL

Item#	Part	Description	XLII 45	XLII MTH 40	XLII MTH 45	XLII MTH 45E	NOTES
20	032016	DOOR ACCESS PANEL / FUEL COMPONENT		1		1	
20	506268	TAPE RUB ADH1 URE 3/8" x 1/2" x 25' / GREY 1820	AR	AR	AR	AR	I
22	481191	CLOSING PANEL FUEL TANK 28 3/8" x 39" To 5-8487	1		1		
22	481471	CLOSING PANEL FUEL TANK / W/AUX TANK 28 3/8" x 39" To 5-8487		1			
24	032081	CLOSING PANEL FUEL HOSE ADAPTOR / STREETSIDE 9" x 11 3/8"	1		1		
25	032083	CLOSING PANEL FUEL HOSE ADAPTOR / CURBSIDE 293MM x 320MM			1		S
26	032076	FUEL ACCESSORIES DOOR PANEL 293MM x 308MM			1		S
26	032084	FUEL ACCESSORIES DOOR PANEL 306MM x 243MM	1		1		L
30	211540	SUPPORT JACK / FORMER DEC 2003	1				
30	215539	SUPPORT JACK / CURRENT DEC 2003	1				
30	213593	SUPPORT / JACK ACCESSORIES	1				
31	211887	SUPPORT ACCESSORIES TOOL	1				
NS	211155	ANGLE RETAINER	1				
		NEXT ARE RELATED WITH SMALL A/C SYSTEM					
32	482811	FLOOR PANEL / EVAPO COMP W/SMALL A/C SYSTEM To 1-7680		1		1	
32	483420	FLOOR PANEL / EVAPO COMP W/SMALL A/C SYSTEM From 1-7681		1		1	
32	482752	FLOOR PANEL / EVAPO COMP W/SMALL A/C SYSTEM To 1-7680			1		
32	483418	FLOOR PANEL / EVAPO COMP W/SMALL A/C SYSTEM From 1-7681			1		
33	482810	REAR VERTICAL PANEL / EVAPO COMP W/SMALL A/C SYSTEM		1		1	
33	221071	REAR VERTICAL PANEL / EVAPO COMP W/SMALL A/C SYSTEM			1		
34	482808	REAR VERTICAL PANEL / COND COMP W/SMALL A/C SYSTEM		1		1	
34	221070	REAR VERTICAL PANEL / COND COMP W/SMALL A/C SYSTEM			1		
35	482809	FLOOR PANEL / COND COMP W/SMALL A/C SYSTEM To 1-7680		1		1	
35	483419	FLOOR PANEL / COND COMP W/SMALL A/C SYSTEM From 1-7681		1		1	
35	482751	FLOOR PANEL / COND COMP W/SMALL A/C SYSTEM To 1-7680			1		
35	483417	FLOOR PANEL / COND COMP W/SMALL A/C SYSTEM From 1-7681			1		
50	**Y2-1865-10**	**SEPARATOR PANEL - BAGGAGE COMPARTMENT - BUS**					
50	**Y2-1865-55**	**SEPARATOR PANEL - BAGGAGE COMPARTMENT - MTH To 6-8805**					
50	**Y2-1865-56**	**SEPARATOR PANEL - BAGGAGE COMPARTMENT - MTH From 6-8806**					
50	**Y2-1865-60**	**SEPARATOR PANEL - BAGGAGE COMPARTMENT - MTH**					
51	**Y2-1865-00**	**FLOOR BAGGAGE COMPARTMENT - BUS To 1-7680**					
51	**Y2-1865-01**	**FLOOR BAGGAGE COMPARTMENT - BUS From 1-7681**					
52	**Y2-1893-00**	**BAGGAGE COMPARTMENT STRUCTURE**					
53	**Y2-1854-10**	**WEATHERSTRIP & RETAINER - BUS**					
53	**Y2-1854-20**	**WEATHERSTRIP & RETAINER - MTH**					
54	**Y2-1875-00**	**FUEL TANK FILLING DOOR**					

From Y-7046 To 8-9339		Date:07/2024	PAGE:Y2-1865-20

EVAPORATOR & CONDENSOR WALL

Item#	Part	Description	XLII 45	XLII MTH40	XLII MTH45	XLII MTH45E	NOTES
		I) NOT INCLUDE WITH THE ACCESS DOOR					
		L) WITH LARGE A/C SYSTEM					
		S) WITH SMALL A/C SYSTEM					

From Y-7046 To 6-8805		Date:07/2024	PAGE:Y2-1865-50
FLOOR BAGGAGE COMPARTMENT - MTH			

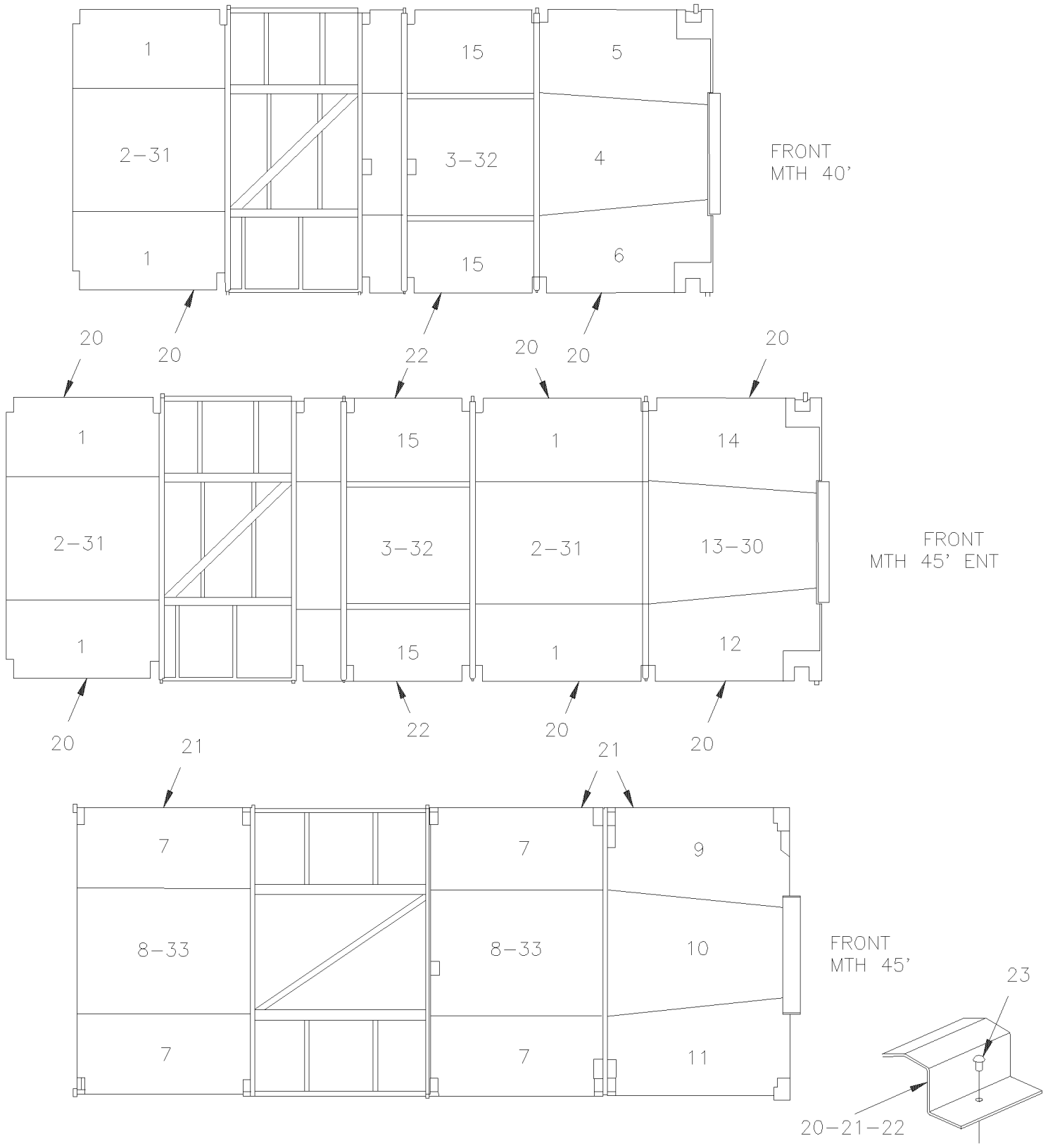

From Y-7046 To 6-8805		Date:07/2024	PAGE:Y2-1865-50

FLOOR BAGGAGE COMPARTMENT - MTH

Item#	Part	Description	XLII 45	XLII MTH 40	XLII MTH 45	XLII MTH 45E	NOTES
1	481097	PANEL FLOOR L.H. & R.H. To 1-7680		1	1	1	
1	483431	PANEL FLOOR L.H. & R.H. From 1-7681		1	1	1	
2	481098	PANEL FLOOR CENTER		2			
2	481098	PANEL FLOOR CENTER				4	
3	482613	PANEL FLOOR CENTER		1			
3	482613	PANEL FLOOR CENTER				2	
4	483058	PANEL FLOOR CENTER FRONT		1		1	
5	483060	PANEL FLOOR L.H. FRONT To 1-7680		1			
5	483432	PANEL FLOOR L.H. FRONT From 1-7681 To 2-7806		1			
5	483627	PANEL FLOOR L.H. FRONT From 2-7807		1			
6	483059	PANEL FLOOR R.H. FRONT To 1-7680		1			
6	483433	PANEL FLOOR R.H. FRONT From 1-7681 To 2-7806		1			
6	483628	PANEL FLOOR R.H. FRONT From 2-7807		1			
7	481958	PANEL FLOOR L.H. & R.H. To 1-7680			4		
7	483430	PANEL FLOOR L.H. & R.H. From 1-7681			1		
8	481959	PANEL FLOOR CENTER			2		
9	483056	PANEL FLOOR L.H. FRONT To 1-7680			1		
9	483435	PANEL FLOOR L.H. FRONT From 1-7681 To 2-7806			1		
9	483631	PANEL FLOOR L.H. FRONT From 2-7807			1		
10	483055	PANEL FLOOR CENTER FRONT			1		
11	483057	PANEL FLOOR R.H. FRONT To 1-7680			1		
11	483436	PANEL FLOOR R.H. FRONT From 1-7681 To 2-7806			1		
11	483632	PANEL FLOOR R.H. FRONT From 2-7807			1		
12	483285	PANEL FLOOR R.H. FRONT To 1-7680				1	
12	483438	PANEL FLOOR R.H. FRONT From 1-7681 To 2-7806				1	
12	483629	PANEL FLOOR R.H. FRONT From 2-7807				1	
13	483283	PANEL FLOOR CENTER / FRONT				1	
14	483284	PANEL FLOOR L.H. FRONT To 1-7680				1	
14	483437	PANEL FLOOR L.H. FRONT From 1-7681 To 2-7806				1	
14	483630	PANEL FLOOR L.H. FRONT From 2-7807				1	
15	482448	PANEL FLOOR L.H. & R.H. To 1-7680		2		2	
15	483434	PANEL FLOOR L.H. & R.H. From 1-7681		2		2	
20	481130	MOULDING FINISHING / "Z" SHAPE / 1235MM / S.B. To 1-7680		4			
20	481130	MOULDING FINISHING / "Z" SHAPE / 1235MM / S.B. To 1-7680				6	
20	483439	MOULDING FINISHING / "Z" SHAPE / 1362MM / S.B. From 1-7681 To 1-7948		4			
20	483439	MOULDING FINISHING / "Z" SHAPE / 1362MM / S.B. From 1-7681 To 1-7948				6	
20	483745	MOULDING FINISHING / "Z" SHAPE / 1342MM / S.B. From 2-7949 To 5-8468		4			
20	483933	MOULDING FINISHING / "Z" SHAPE / 1342MM / B.A. From 5-8469		4			
20	483745	MOULDING FINISHING / "Z" SHAPE / 1342MM / S.B. From 2-7949 To 5-8468				6	
20	483933	MOULDING FINISHING / "Z" SHAPE / 1342MM / B.A. From 5-8469				6	
21	481966	MOULDING FINISHING / "Z" SHAPE / 1405MM / S.B. To 1-7680			6		
21	483440	MOULDING FINISHING / "Z" SHAPE / 1533MM / S.B. From 1-7681 To 1-7948			6		

From Y-7046 To 6-8805		Date:07/2024	PAGE:Y2-1865-50

FLOOR BAGGAGE COMPARTMENT - MTH

Item#	Part	Description	XLII 45	XLII MTH40	XLII MTH45	XLII MTH45E	NOTES
21	483673	MOULDING FINISHING / "Z" SHAPE / 1529MM / S.B. From 3-8110			6		
21	483744	MOULDING FINISHING / "Z" SHAPE / 1513MM / S.B. From 2-7949 To 3-8109			6		
21	483673	MOULDING FINISHING / "Z" SHAPE / 1529MM / S.B. From 3-8110 To 5-8468			6		
21	483971	MOULDING FINISHING / "Z" SHAPE / 1529MM / B.A. From 5-8469			6		
21	483453	MOULDING FINISHING / "Z" SHAPE / 1533MM / S.B. To 3-8109			1		A
21	483743	MOULDING FINISHING / "Z" SHAPE / 1533MM / S.B. From 3-8110 To 5-8468			1		A
21	483939	MOULDING FINISHING / "Z" SHAPE / 1533MM / B.A. From 5-8469			1		A
22	482639	MOULDING FINISHING / "Z" SHAPE / 1018MM / S.B. To 1-7680		2		2	
22	483441	MOULDING FINISHING / "Z" SHAPE / 1146MM / S.B. From 1-7681 To 1-7948		2		2	
22	483746	MOULDING FINISHING / "Z" SHAPE / 1126MM / S.B. From 2-7949 To 5-8468		2		2	
22	483934	MOULDING FINISHING / "Z" SHAPE / 1126MM / B.A. From 5-8469		2		2	
23	504339	RIVET POP DOME OE 1/8x3/8 SS		40	40	40	
23	680092	SEALANT TAPE BUTYL / GREY / 1/16"x3/4x50' / 71011V1760		AR	AR	AR	
23	500844	SCREW TC FL PH #10-32x1 1/4 Z050		AR	AR	AR	
30	483362	PANEL ALLUMINUM 14GA / FLOOR COVERING To 1-7860				1	
30	483720	PANEL ALLUMINUM 14GA / FLOOR COVERING From 1-7861				1	
31	482114	PANEL ALLUMINUM 14GA / FLOOR COVERING To 1-7860				1	
31	482351	PANEL ALLUMINUM 14GA / FLOOR COVERING From 1-7861				1	
32	482719	PANEL ALLUMINUM 14GA / FLOOR COVERING To 1-7860				1	
32	482350	PANEL ALLUMINUM 14GA / FLOOR COVERING From 1-7861				1	
33	482131	PANEL ALLUMINUM 14GA / FLOOR COVERING			2		
		A) WITH HINGE DOOR WITH "SLIDE-OUT"					

From 6-8806 To 8-9339		Date:07/2024	PAGE:Y2-1865-51
FLOOR BAGGAGE COMPARTMENT - MTH			

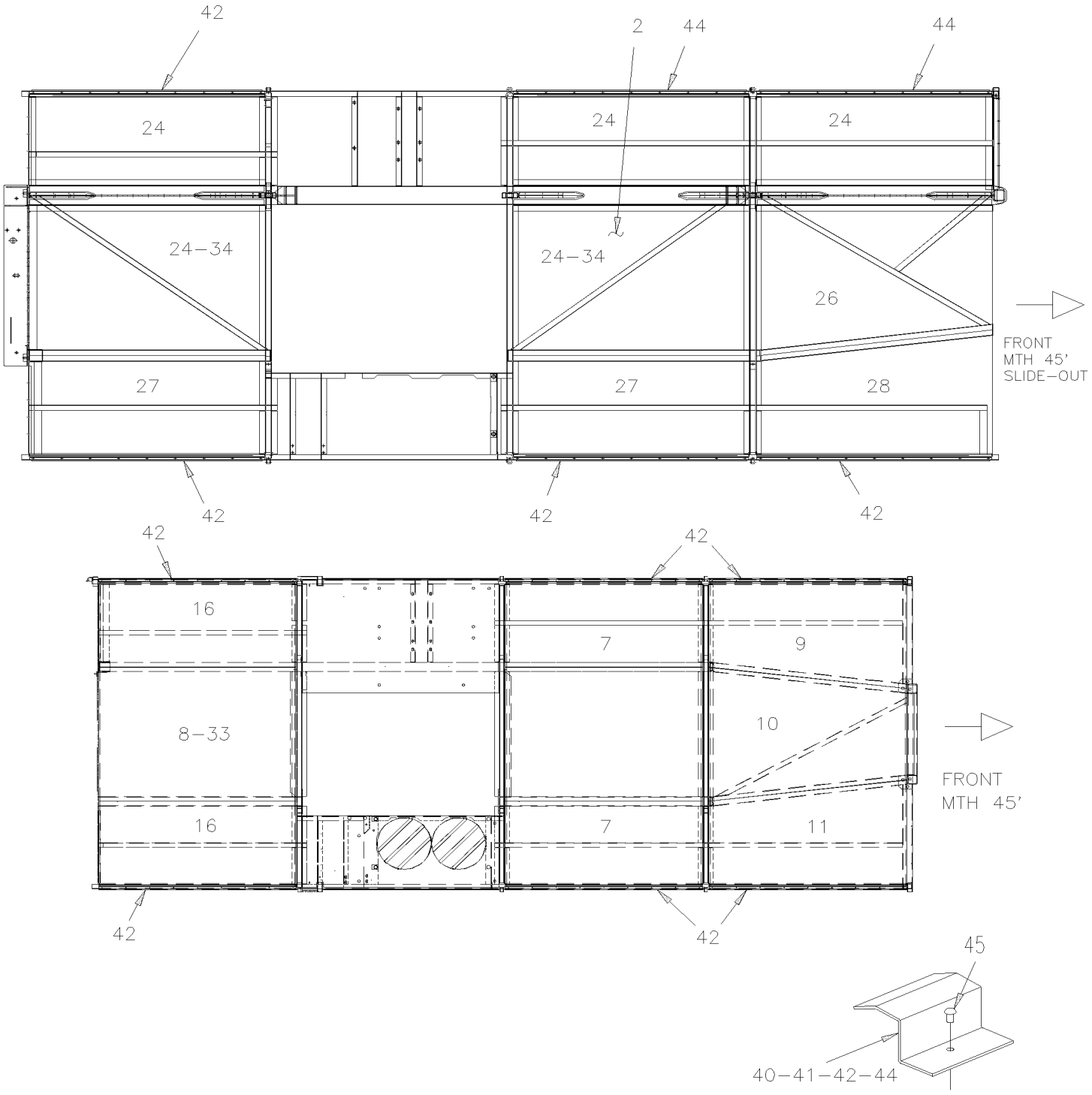

From 6-8806 To 8-9339		Date:07/2024	PAGE:Y2-1865-51
FLOOR BAGGAGE COMPARTMENT - MTH			

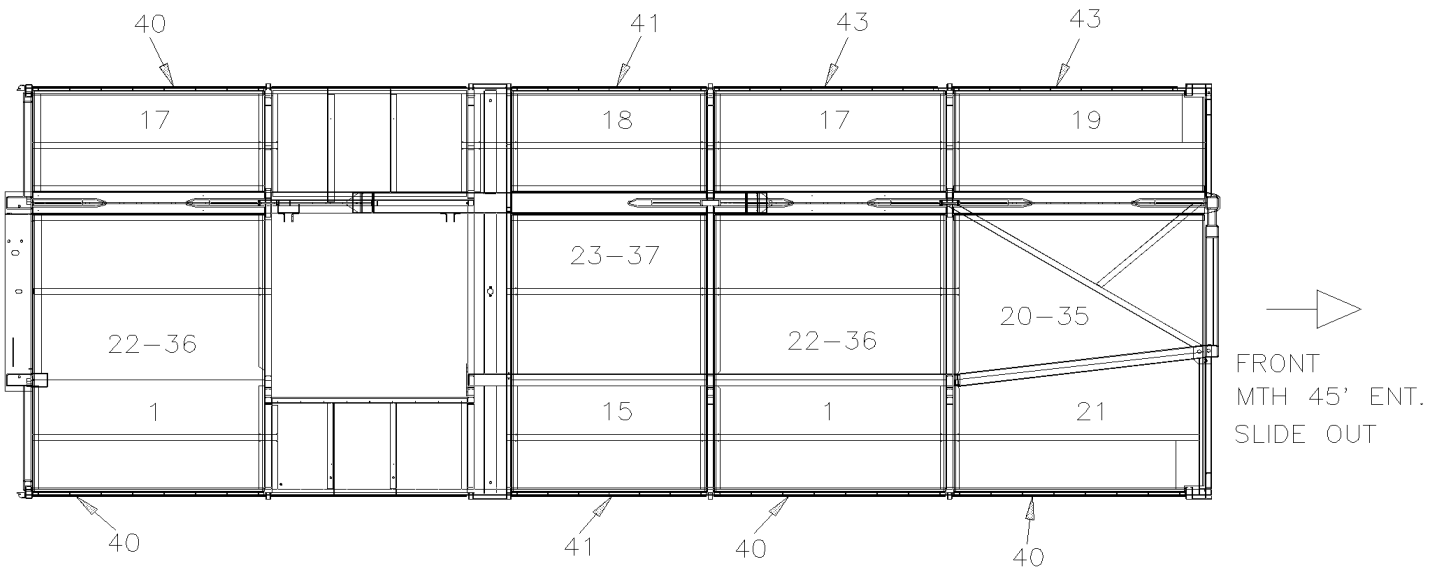

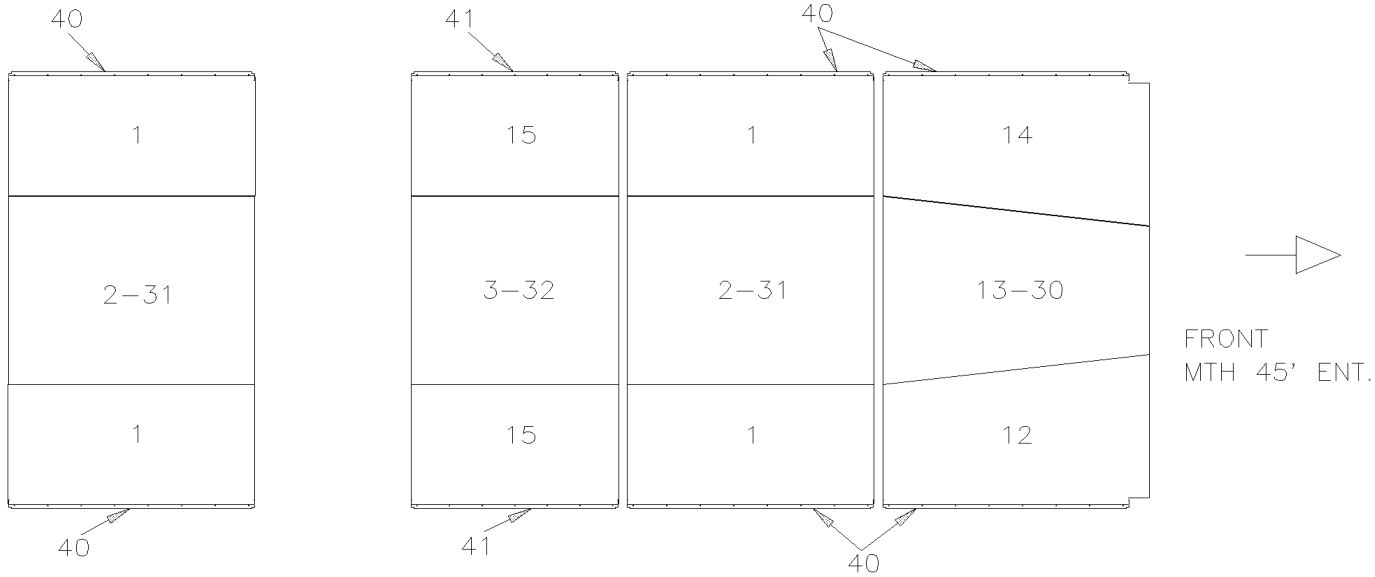

From 6-8806 To 8-9339		Date:07/2024	PAGE:Y2-1865-51
FLOOR BAGGAGE COMPARTMENT - MTH			

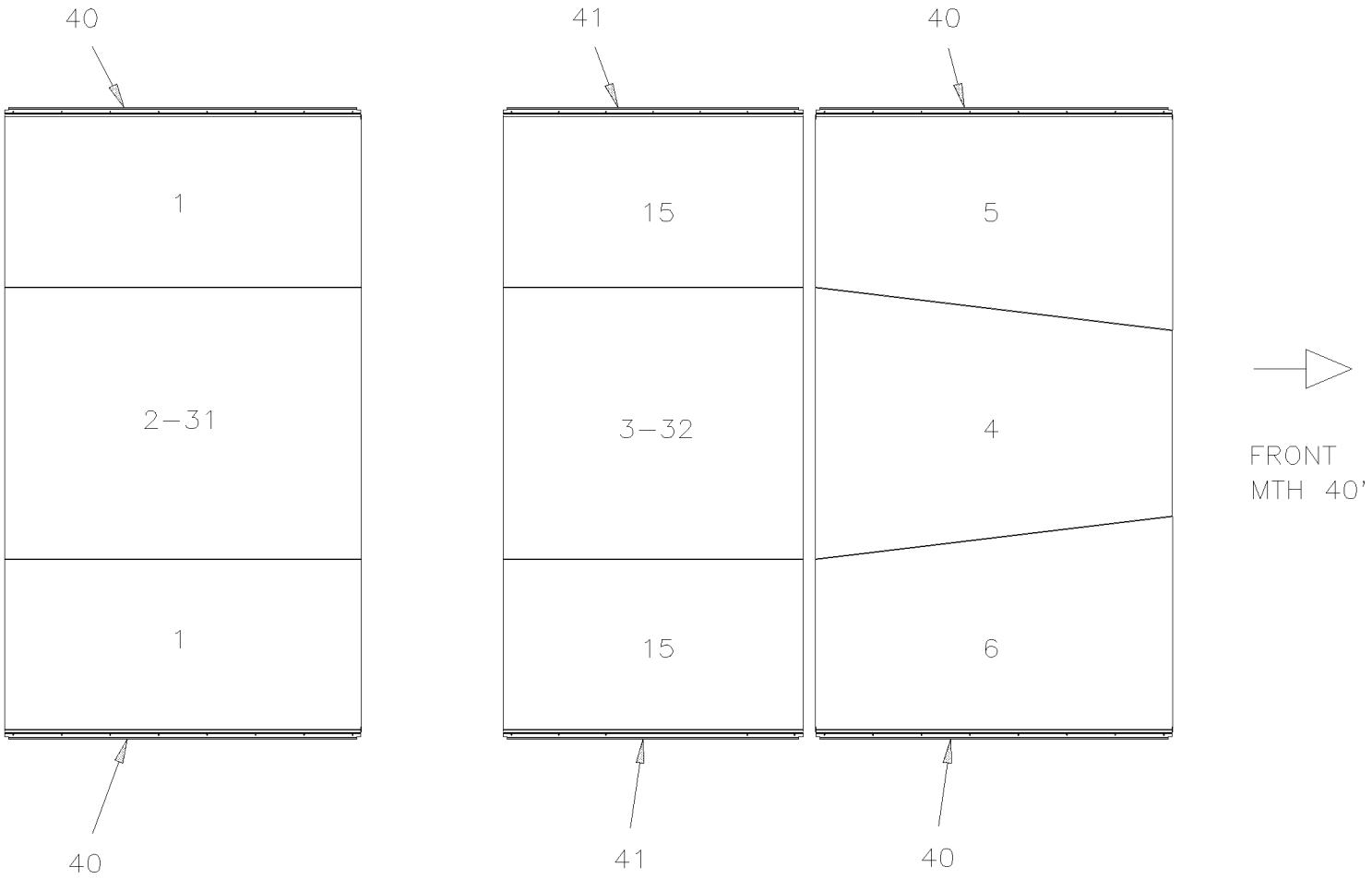

From 6-8806 To 8-9339		Date:07/2024	PAGE:Y2-1865-51

FLOOR BAGGAGE COMPARTMENT - MTH

Item#	Part	Description	XLII 45	XLII MTH40	XLII MTH45	XLII MTH45E	NOTES
1	483431	PANEL FLOOR L.H. & R.H. To 5-8813		2			
11	483431	PANEL FLOOR L.H. & R.H.				4	
2	481098	PANEL FLOOR CENTER To 5-8813		1			
21	481098	PANEL FLOOR CENTER				2	
3	482613	PANEL FLOOR CENTER		1		1	
4	483058	PANEL FLOOR CENTER FRONT To 5-8813		1			
5	483627	PANEL FLOOR L.H. FRONT To 5-8813		1			
6	483628	PANEL FLOOR R.H. FRONT To 5-8813		1			
7	483430	PANEL FLOOR L.H. & R.H.			2		
8	481959	PANEL FLOOR CENTER			2		
9	483631	PANEL FLOOR L.H. FRONT			1		
10	483055	PANEL FLOOR CENTER FRONT			1		
11	483632	PANEL FLOOR R.H. FRONT			1		
12	483629	PANEL FLOOR R.H. FRONT				1	
13	483283	PANEL FLOOR CENTER / FRONT				1	
14	483630	PANEL FLOOR L.H. FRONT				1	
15	483434	PANEL FLOOR L.H. & R.H.				2	
16	489181	MOULDING FINISHING / "Z" SHAPE / 1529MM			2		
17	489187	PANEL FLOOR L.H. / W/SLIDE OUT				2	
18	489188	PANEL FLOOR L.H. / W/SLIDE OUT				1	
19	489189	PANEL FLOOR L.H. FRONT / W/SLIDE OUT				1	
20	489186	PANEL FLOOR CENTER / FRONT / W/SLIDE OUT				1	
21	489190	MOULDING FINISHING / "Z" SHAPE / 1359MM		1		1	
22	489184	PANEL FLOOR CENTER / W/SLIDE OUT				2	
23	489185	PANEL FLOOR CENTER / W/SLIDE OUT				1	
24	489175	PANEL FLOOR L.H. / W/SLIDE OUT			3		
25	489176	PANEL FLOOR CENTER / W/SLIDE OUT			2		
26	489178	PANEL FLOOR CENTER / FRONT / W/SLIDE OUT			1		
27	489177	PANEL FLOOR R.H. / W/SLIDE OUT			2		
28	489179	PANEL FLOOR R.H. FRONT / W/SLIDE OUT			1		
30	483720	PANEL ALLUMINUM 14GA / FLOOR COVERING To 5-8813		1			
31	482351	PANEL ALLUMINUM 14GA / FLOOR COVERING To 5-8813		1			
311	482351	PANEL ALLUMINUM 14GA / FLOOR COVERING				2	
32	482350	PANEL ALLUMINUM 14GA / FLOOR COVERING		1		1	
33	482131	PANEL ALLUMINUM 14GA / FLOOR COVERING			2		
34	489194	PANEL ALLUMINUM 14GA / FLOOR COVERING / W/SLIDE OUT			2		
35	485496	PANEL ALLUMINUM 14GA / FLOOR COVERING / W/SLIDE OUT				1	
36	485498	PANEL ALLUMINUM 14GA / FLOOR COVERING / W/SLIDE OUT				2	
37	485497	PANEL ALLUMINUM 14GA / FLOOR COVERING / W/SLIDE OUT				1	
40	489190	MOULDING FINISHING / "Z" SHAPE / 1359MM To 5-8813		4			
401	489190	MOULDING FINISHING / "Z" SHAPE / 1359MM				6	
41	489191	MOULDING FINISHING / "Z" SHAPE / 1143MM		2		2	

From 6-8806 To 8-9339		Date:07/2024	PAGE:Y2-1865-51

FLOOR BAGGAGE COMPARTMENT - MTH

Item#	Part	Description	XLII 45	XLII MTH40	XLII MTH45	XLII MTH45E	NOTES
42	489181	MOULDING FINISHING / "Z" SHAPE / 1529MM		6		6	
43	489192	MOULDING FINISHING / "Z" SHAPE / W/HINGE DOOR & SLIDE OUT / 1359MM				2	
44	489182	MOULDING FINISHING / "Z" SHAPE / W/HINGE DOOR & SLIDE OUT / 1533MM			2		
44	485584	MOULDING FINISHING / "Z" SHAPE / W/HINGE DOOR & SLIDE OUT / 1533MM			1		
45	504339	RIVET POP DOME OE 1/8x3/8 SS		AR	AR	AR	
NS	685126	ADHESIVE SIMSON #ISR 70-03 / GREY / 600ml SAUSAGE		AR	AR	AR	
NS	790392	RUBBER BLOCK ADJUSTEMENT 1" x 5/16" x 1/8" 80DURO		AR	AR	AR	

From Y-7046 To 6-8805		Date:07/2024	PAGE:Y2-1865-55
SEPARATOR PANEL - BAGGAGE COMPARTMENT - MTH			

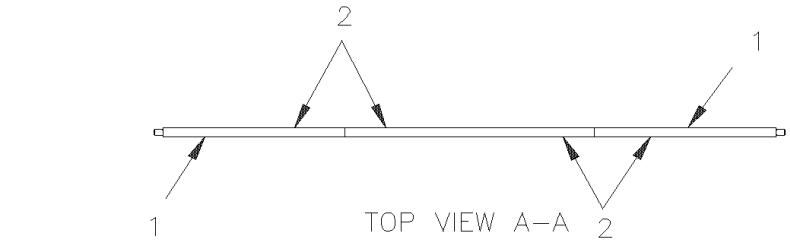

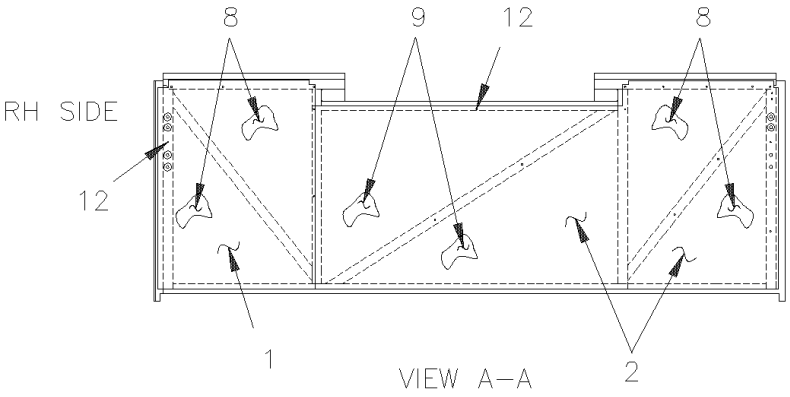

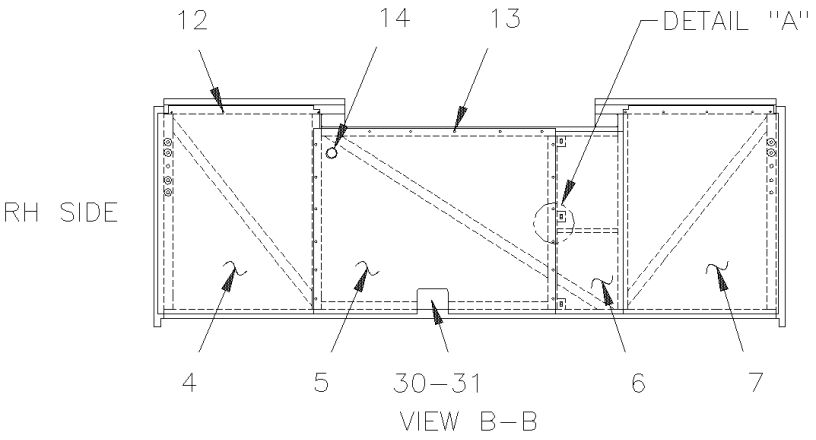

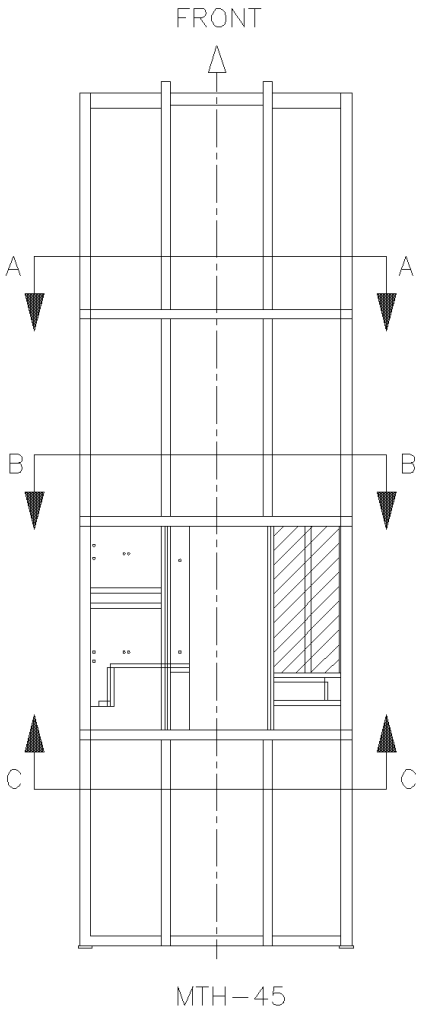

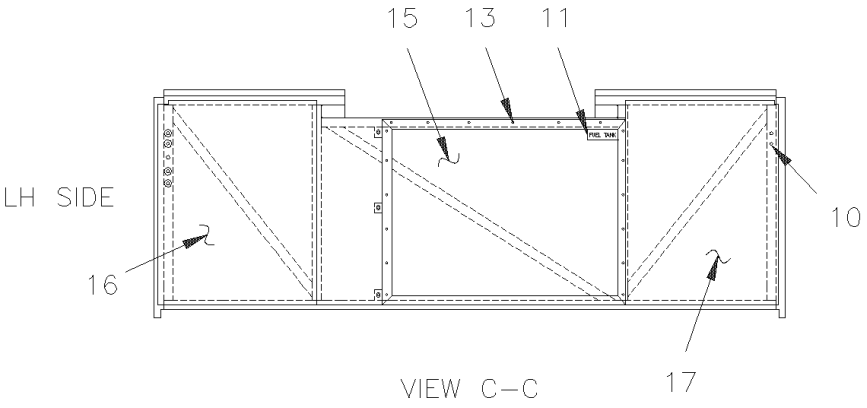

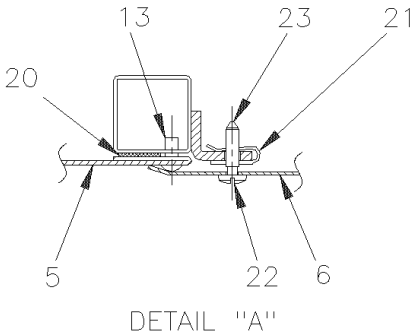

From Y-7046 To 6-8805		Date:07/2024	PAGE:Y2-1865-55

SEPARATOR PANEL - BAGGAGE COMPARTMENT - MTH

Item#	Part	Description	XLII 45	XLII MTH40	XLII MTH45	XLII MTH45E	NOTES
1	482467	PANEL SIDE SEPARATOR			2		
1	483384	PANEL			1		C
2	483111	PANEL SIDE & CENTER SEPARATOR			2		
2	483383	PANEL SIDE & CENTER SEPARATOR			2		C
4	482996	PANEL SIDE SEPARATOR			1		
5	481471	CLOSING PANEL FUEL TANK / W/AUX TANK 28 3/8" x 39" To 4-8305			1		
5	481109	. PANEL FUEL TANK CLOSING From 4-8306			1		
6	481193	PANEL DOOR ASSY W/HINGE			1		
6	480928	. HINGE / DOOR PANEL 27 1/8" (689MM)			1		
7	481194	PANEL SIDE SEPARATOR			1		
7	481241	PANEL SIDE SEPARATOR			1		B
7	483385	PANEL			1		C
8	350028	INSULATING PANEL FOAM / CONDENSOR OR EVAPORATOR & BAGGAGE			4		
9	350029	INSULATING			2		
10	504528	HOLE PLUG BUTTON / .437 O.D. BLACK			14		
11	031163	DECAL / "FUEL TANK ACCESS" / ENGLISH			1		
11	032561	DECAL / "FUEL TANK ACCESS" / ENGLISH & SPANISH			1		
12	504347	RIVET POP DOME OE 3/16x1/4 AL			AR		
13	500657	SCREW TC TR PH #10-24x1/2 Z050			48		
14	504059	GROMMET / 1.250x1.500x.094x.375x1.875			1		A
14	504443	SNAP-IN PLUG / 1.500 O.D.			1		
15	481191	CLOSING PANEL FUEL TANK 28 3/8" x 39" To 4-8293			1		
15	485381	PANEL FRAME / FORWARD FUEL TANK 990MM x 766MM From 4-8294			1		
NS	485383	PANEL FUEL TANK CLOSING From 4-8294			1		
16	482997	PANEL SIDE SEPARATOR			1		B
17	481197	PANEL SIDE SEPARATOR			1		B
17	506001	TAPE RUB ADH1 CC POL 1/8" x 3/4" x 50' / GREY 2520X			AR		
20	506071	TAPE RUB ADH1 CC POL 1/8" x 1/2" x 50' / GREY 2520X			AR		
21	504377	NUT SPR U 1 1/64x1/2x.109-.161			3		
22	504289	WASHER SPR GRIP .437x.020 AL			13		
23	504376	SCREW FST SLT #12 18x28.2 STL			3		
30	481472	PANEL CLOSING / 6 5/8" x 4 1/2"			1		
31	504272	RIVET CHY Q BRAZ 3/16x1/8 SS			7		
		A) WITH AUX. FUEL TANK					
		B) WITH SMALL A/C SYSTEM					
		C) WITH SLIDE-OUT					

From 6-8806 To 8-9339		Date:07/2024	PAGE:Y2-1865-56
SEPARATOR PANEL - BAGGAGE COMPARTMENT - MTH			

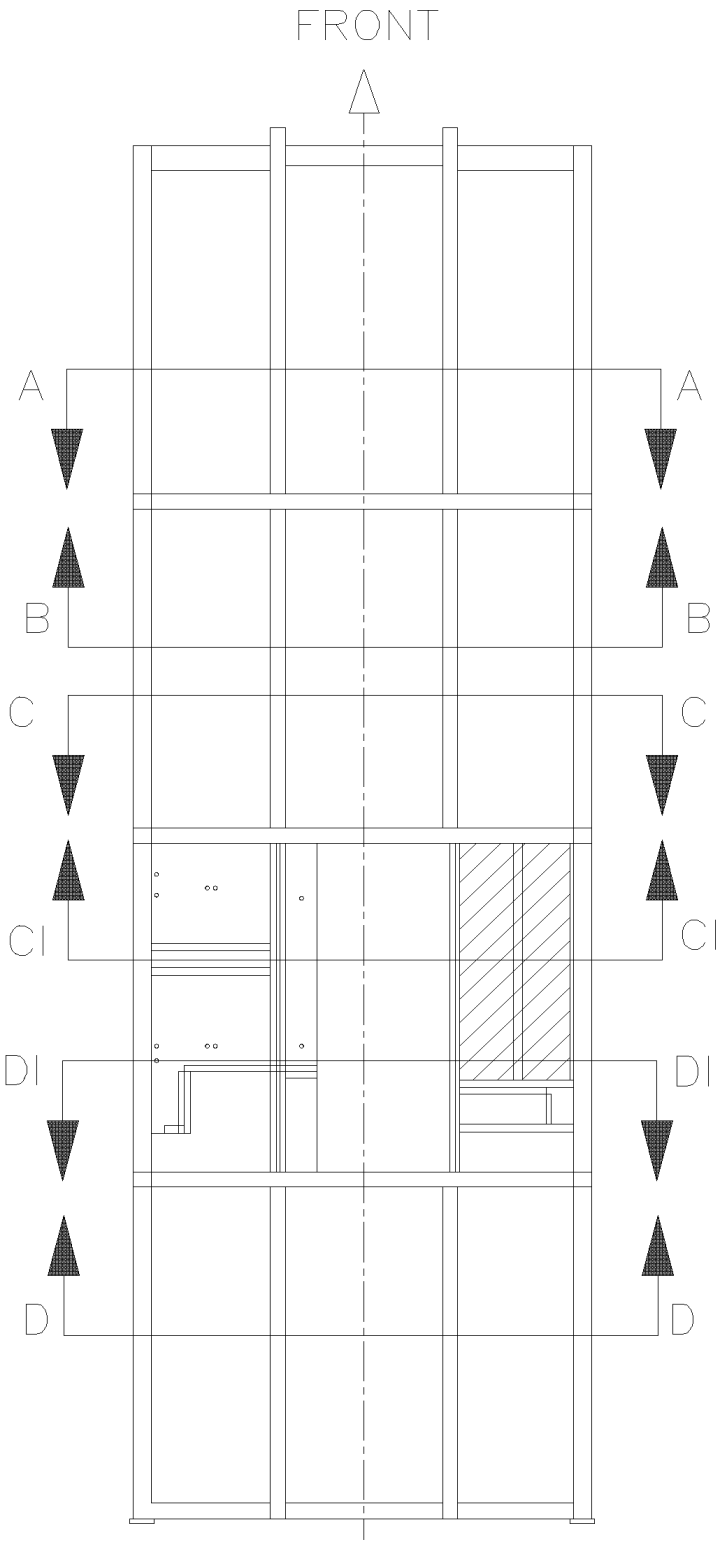

From 6-8806 To 8-9339		Date:07/2024	PAGE:Y2-1865-56
SEPARATOR PANEL - BAGGAGE COMPARTMENT - MTH			

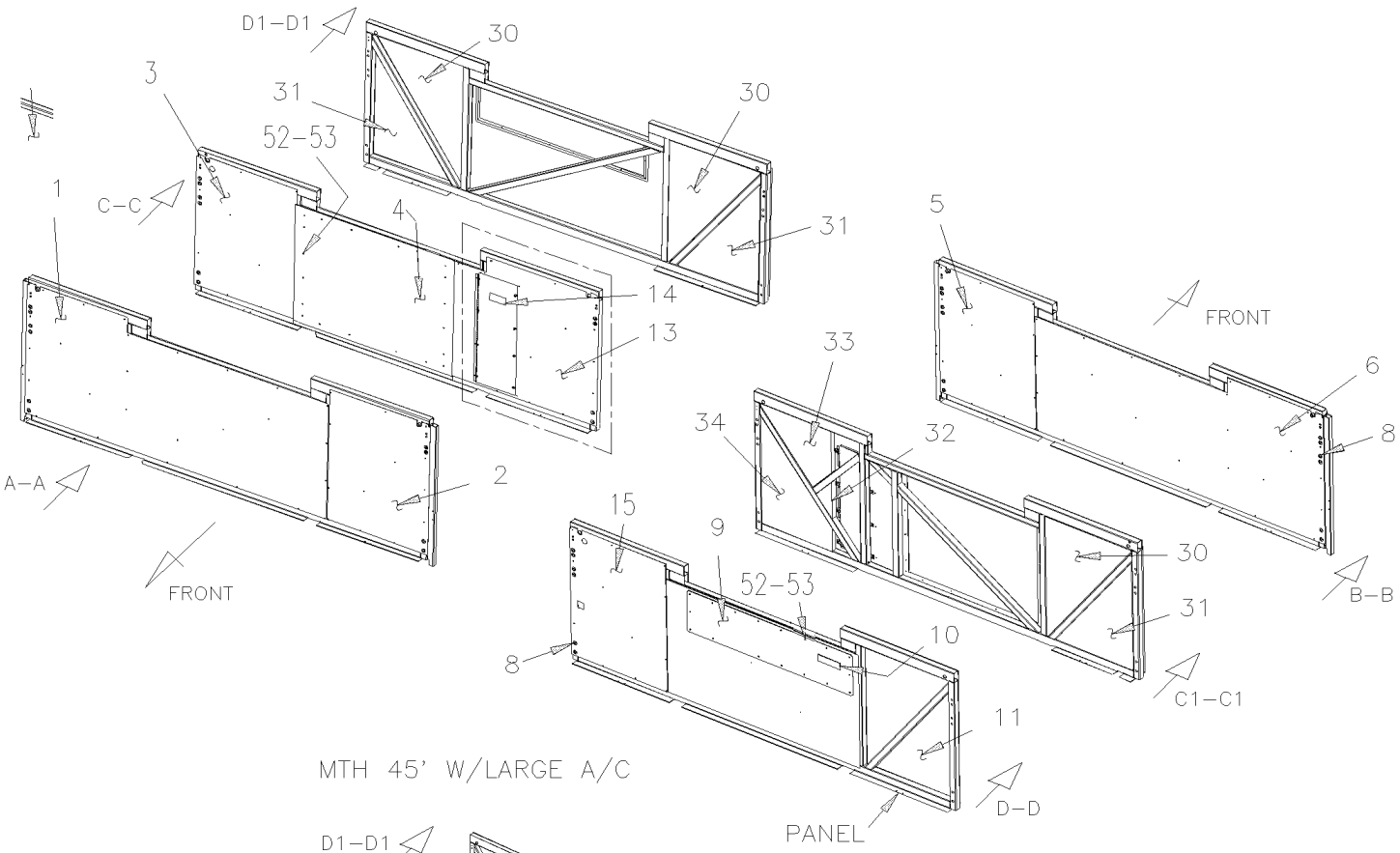

MTH 45' W/LARGE A/C

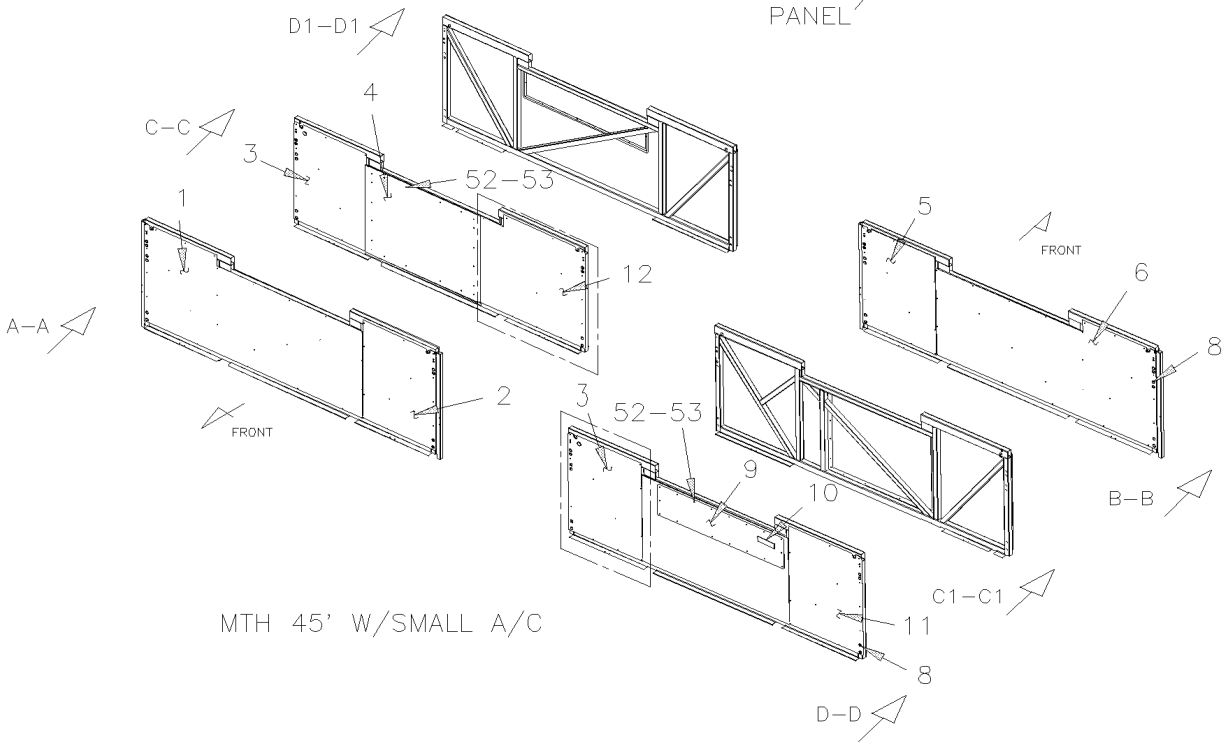

MTH 45' W/SMALL A/C

From 6-8806 To 8-9339		Date:07/2024	PAGE:Y2-1865-56
SEPARATOR PANEL - BAGGAGE COMPARTMENT - MTH			

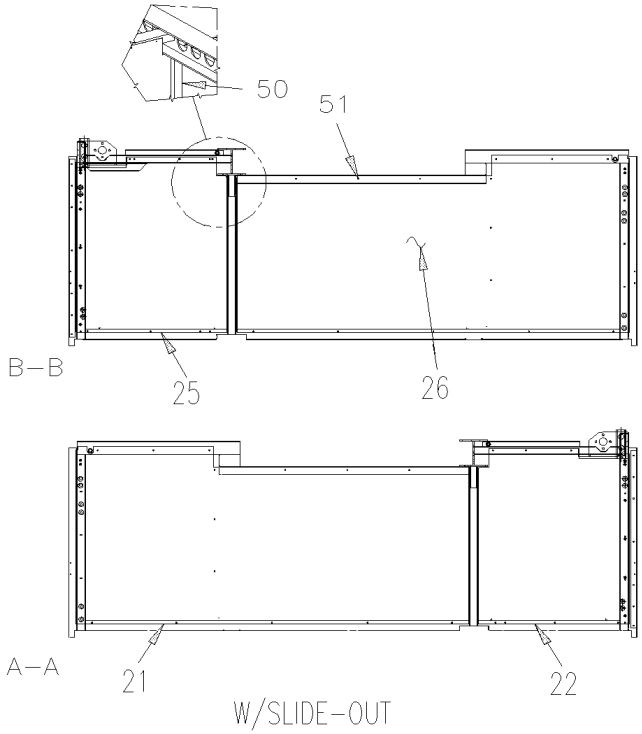

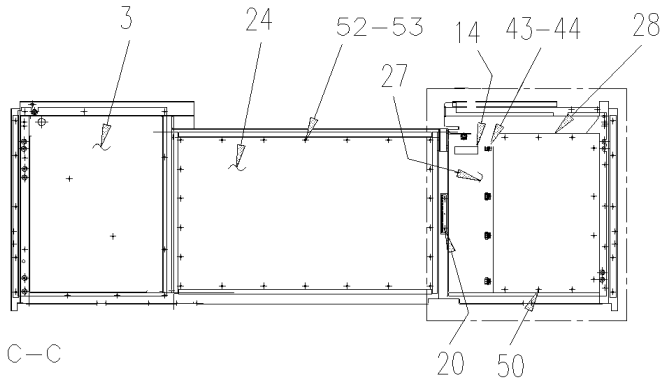

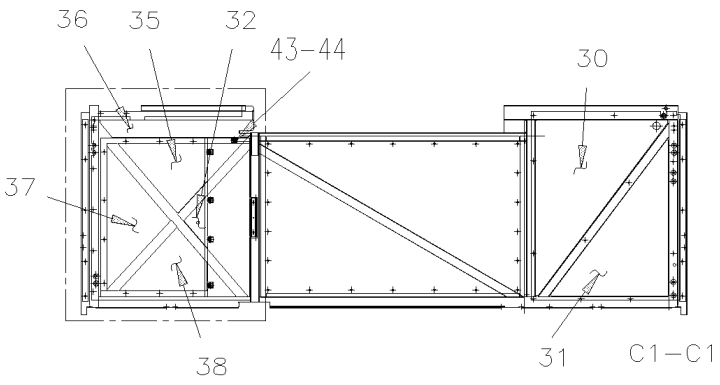

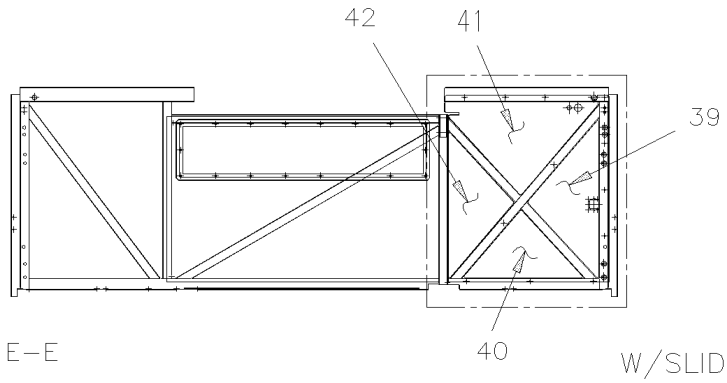

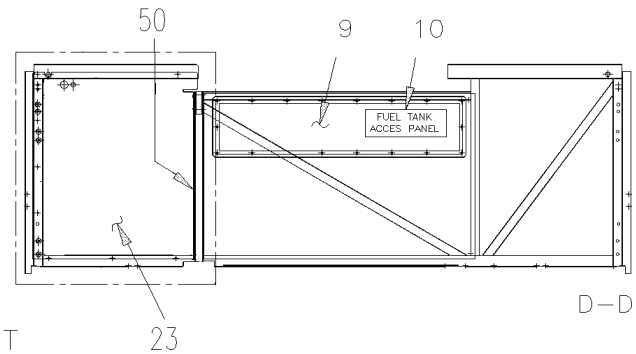

W/SLIDE–OUT
LARGE A/C

From 6-8806 To 8-9339		Date:07/2024	PAGE:Y2-1865-56

SEPARATOR PANEL - BAGGAGE COMPARTMENT - MTH

Item#	Part	Description	XLII 45	XLII MTH40	XLII MTH45	XLII MTH45E	NOTES
1	485512	PANEL SIDE & CENTER SEPARATOR To 7-9095			1		
1	484066	PANEL SIDE & CENTER SEPARATOR From 7-9096			1		
2	482427	PANEL SIDE SEPARATOR To 7-9095			1		
2	484067	PANEL SIDE SEPARATOR From 7-9096			1		
3	482471	PANEL SIDE SEPARATOR			1		
4	485517	PANEL FUEL TANK CLOSING 990MM x 746MM			1		
5	485523	PANEL SIDE SEPARATOR To 7-9095			1		
5	484068	PANEL SIDE SEPARATOR From 7-9096			1		
6	485512	PANEL SIDE & CENTER SEPARATOR To 7-9095			1		
6	484066	PANEL SIDE & CENTER SEPARATOR From 7-9096			1		
8	504528	HOLE PLUG BUTTON / .437 O.D. BLACK			1		
9	482521	PANEL FUEL TANK ACCESS			1		
10	031163	DECAL / "FUEL TANK ACCESS" / ENGLISH			1		
10	032561	DECAL / "FUEL TANK ACCESS" / ENGLISH & SPANISH			1		
11	482427	PANEL SIDE SEPARATOR			1		
11	484067	PANEL SIDE SEPARATOR From 7-9096			1		
12	485518	PANEL SIDE SEPARATOR / W/SMALL A/C			1		
13	Call order desk	ACCESS PANEL LARGE W/HINGE DOOR			1		P
NS	485519	. PANEL			1		
NS	485507	. PANEL DOOR			1		
NS	480928	. HINGE / DOOR PANEL 27 1/8" (689MM)			1		
NS	504104	. RIVET POP DOME OE 1/8x1/8 SS			8		
NS	504604	. FASTENER			4		
NS	504605	. RECEPTACLE 6 MM			4		
NS	506228	. TAPE RUB ADH1 CC POL 1/4" x 1/2" x 37.5' / GREY 2520X			AR		
NS	506225	. TAPE RUB ADH1 CC POL 1/16" x 1/4" x 100' / GREY 2520			AR		
14	370354	DECAL / AIR FILTER / ENGLISH & FRANCAIS			1		
14	374207	DECAL / AIR FILTER / ENGLISH & SPANISH			1		
15	485521	PANEL SIDE SEPARATOR			1		
20	480928	HINGE / DOOR PANEL 27 1/8" (689MM)			1		
21	482499	PANEL SIDE & CENTER SEPARATOR / W/SLIDE OUT To 7-9095			1		
21	484060	PANEL SIDE & CENTER SEPARATOR / W/SLIDE OUT From 7-9096			1		
22	484035	PANEL SIDE & CENTER SEPARATOR / W/SLIDE OUT To 7-9095			1		
22	484062	PANEL SIDE & CENTER SEPARATOR / W/SLIDE OUT From 7-9096			1		
23	482469	PANEL SIDE SEPARATOR / W/SLIDE OUT			1		
23	485458	PANEL SIDE SEPARATOR / W/SLIDE OUT & SMALL A/C			1		
24	482519	PANEL FUEL TANK CLOSING			1		S
25	482477	PANEL SIDE SEPARATOR / W/SLIDE OUT To 7-9095			1		
25	484063	PANEL SIDE SEPARATOR / W/SLIDE OUT From 7-9096			1		
26	482518	PANEL SIDE & CENTER SEPARATOR / W/SLIDE OUT To 7-9095			1		
26	484061	PANEL SIDE & CENTER SEPARATOR / W/SLIDE OUT From 7-9096			1		
27	Call order desk	ACCESS PANEL ASSY / SMALL W/DZUS / W/SLIDE OUT			1		P

From 6-8806 To 8-9339		Date:07/2024	PAGE:Y2-1865-56

SEPARATOR PANEL - BAGGAGE COMPARTMENT - MTH

Item#	Part	Description	XLII 45	XLII MTH40	XLII MTH45	XLII MTH45E	NOTES
. NS	483267	. DOOR PANEL			1		
. NS	504603	. STUD 6 MM (DZUS)			4		
. NS	504604	. FASTENER			4		
. NS	506268	. TAPE RUB ADH1 URE 3/8" x 1/2" x 25' / GREY 1820			AR		
. NS	506225	. TAPE RUB ADH1 CC POL 1/16" x 1/4" x 100' / GREY 2520			AR		
28	Call order desk	ACCESS PANEL ASSY / LARGE W/RECEPTACLE / W/SLIDE OUT			1		P
. NS	483262	. ACCESS PANEL			1		
. NS	504605	. RECEPTACLE 6 MM			4		
. NS	506268	. TAPE RUB ADH1 URE 3/8" x 1/2" x 25' / GREY 1820			AR		
30	355878	INSULATOR PANEL			1		
31	355879	INSULATOR PANEL			1		
32	351573	INSULATOR PANEL			1		
33	355902	INSULATOT PANEL			1		
34	355901	INSULATOR PANEL			1		
35	351574	INSULATOR PANEL			1		
36	351570	INSULATOR PANEL / W/SLIDE OUT			1		
37	351571	INSULATOR PANEL / W/SLIDE OUT			1		
38	351572	INSULATOR PANEL / W/SLIDE OUT			1		
39	355874	INSULATOR PANEL / W/SLIDE OUT			1		
40	355875	INSULATOR PANEL / W/SLIDE OUT			1		
41	355877	INSULATOR PANEL / W/SLIDE OUT			1		
42	355876	INSULATOR PANEL / W/SLIDE OUT			1		
43	504605	RECEPTACLE 6 MM			1		
44	504604	FASTENER			AR		
50	682348	TAPE, DOUBLE COATED ACRYLIC			AR		
51	504347	RIVET POP DOME OE 3/16x1/4 AL			AR		
52	500657	SCREW TC TR PH #10-24x1/2 Z050			AR		
53	506002	TAPE RUB ADH1 CC POL 3/16" x 1/2" x 40' / GREY 2520			AR		
		S) WITH SLIDE-OUT					
		P) CALL ORDER DESK FOR SPECIFIC APPLICATION (V.I.N.)					

From Y-7046 To 6-8805		Date:07/2024	PAGE:Y2-1865-60
SEPARATOR PANEL - BAGGAGE COMPARTMENT - MTH			

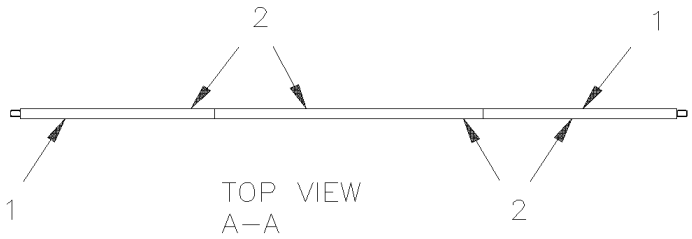

TOP VIEW
A–A

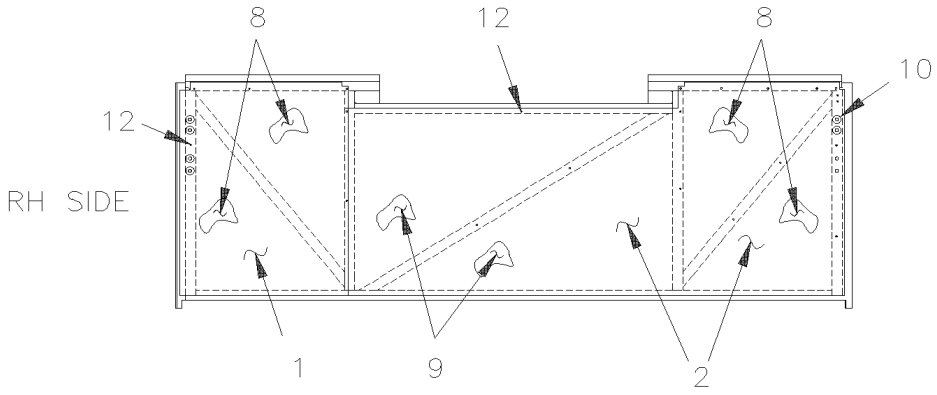

VIEW A–A

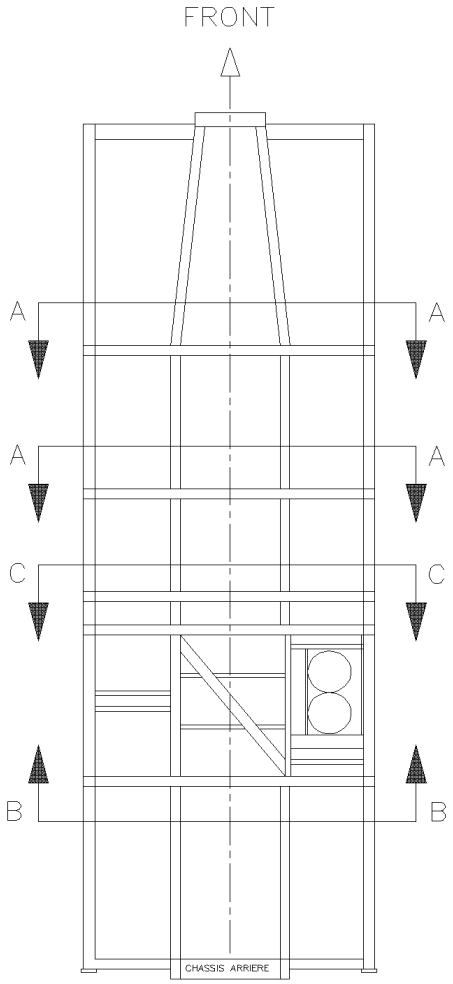

MTH 40 & MTH 45' ENT

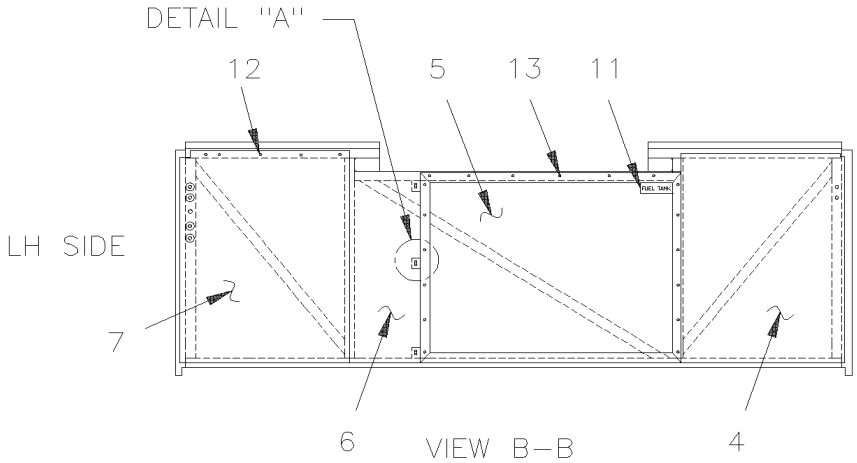

VIEW B–B

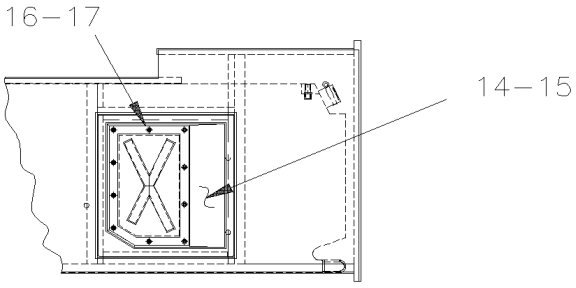

VIEW C–C

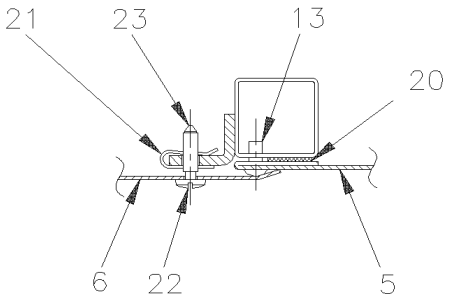

DETAIL "A"

From Y-7046 To 6-8805		Date:07/2024	PAGE:Y2-1865-60

SEPARATOR PANEL - BAGGAGE COMPARTMENT - MTH

Item#	Part	Description	XLII 45	XLII MTH40	XLII MTH45	XLII MTH45E	NOTES
1	482467	PANEL SIDE SEPARATOR		2			
1	482467	PANEL SIDE SEPARATOR				4	
2	483111	PANEL SIDE & CENTER SEPARATOR		2			
2	483111	PANEL SIDE & CENTER SEPARATOR				4	
4	482724	PANEL SIDE SEPARATOR		1		1	
4	481197	PANEL SIDE SEPARATOR		1			A
4	213573	PANEL SIDE SEPARATOR / BAGGAGE COMPARTMENT				1	B
5	481191	CLOSING PANEL FUEL TANK 28 3/8" x 39" To 4-8306		1		1	
5	485381	PANEL FRAME / FORWARD FUEL TANK 990MM x 766MM From 4-8307		1		1	
NS	485383	PANEL FUEL TANK CLOSING From 4-8307		1		1	
6	481193	PANEL DOOR ASSY W/HINGE		1		1	
NS	480928	. HINGE / DOOR PANEL 27 1/8" (689MM)		1		1	
7	482997	PANEL SIDE SEPARATOR		1		1	A
7	483251	PANEL SIDE SEPARATOR		1		1	
8	350028	INSULATING PANEL FOAM / CONDENSOR OR EVAPORATOR & BAGGAGE		4			
8	350028	INSULATING PANEL FOAM / CONDENSOR OR EVAPORATOR & BAGGAGE				8	
9	350029	INSULATING		2			
9	350029	INSULATING				4	
10	504528	HOLE PLUG BUTTON / .437 O.D. BLACK		8		8	
11	031163	DECAL / "FUEL TANK ACCESS" / ENGLISH		1		1	
11	032561	DECAL / "FUEL TANK ACCESS" / ENGLISH & SPANISH		1		1	
12	504347	RIVET POP DOME OE 3/16x1/4 AL		AR		AR	
13	500657	SCREW TC TR PH #10-24x1/2 Z050		24		24	
14	482684	ACCESS PANEL		1		1	C
15	285684	RUBBER SEAL EXTRUSION / ACCESS DOOR / 405MM X 501MM		1		1	C
15	289933	RUBBER SEAL EXTRUSION / ACCESS DOOR / 405MM X 501MM		1		1	C
15	2800147	RUBBER SEAL EXTRUSION / ACCESS DOOR / 405MM X 501MM		1		1	C
16	5001209	SCREW CAP HEX M6-1.0x25 G8.8 Z050		10		10	C
17	500411	WASHER FL .260x.697x.050 SS		10		10	C
17	506466	TAPE RUB ADH1 CC POL 1/16" x 1 1/2" x 100 / GREY 2520		AR		AR	C
20	506071	TAPE RUB ADH1 CC POL 1/8" x 1/2" x 50' / GREY 2520X		AR		AR	
21	504377	NUT SPR U 1 1/64x1/2x.109-.161		3		3	
22	504289	WASHER SPR GRIP .437x.020 AL		3		3	
23	504376	SCREW FST SLT #12 18x28.2 STL		3		3	
24	214903	PANEL SIDE SEPARATOR		1			A
		A) WITH SMALL A/C SYSTEM					
		B) WITH SMALL A/C SYSTEM & SPECIAL DOOR 38"					
		C) WITH LARGE A/C SYSTEM					

From 6-8806 To 8-9339		Date:07/2024	PAGE:Y2-1865-61
SEPARATOR PANEL - BAGGAGE COMPARTMENT - MTH			

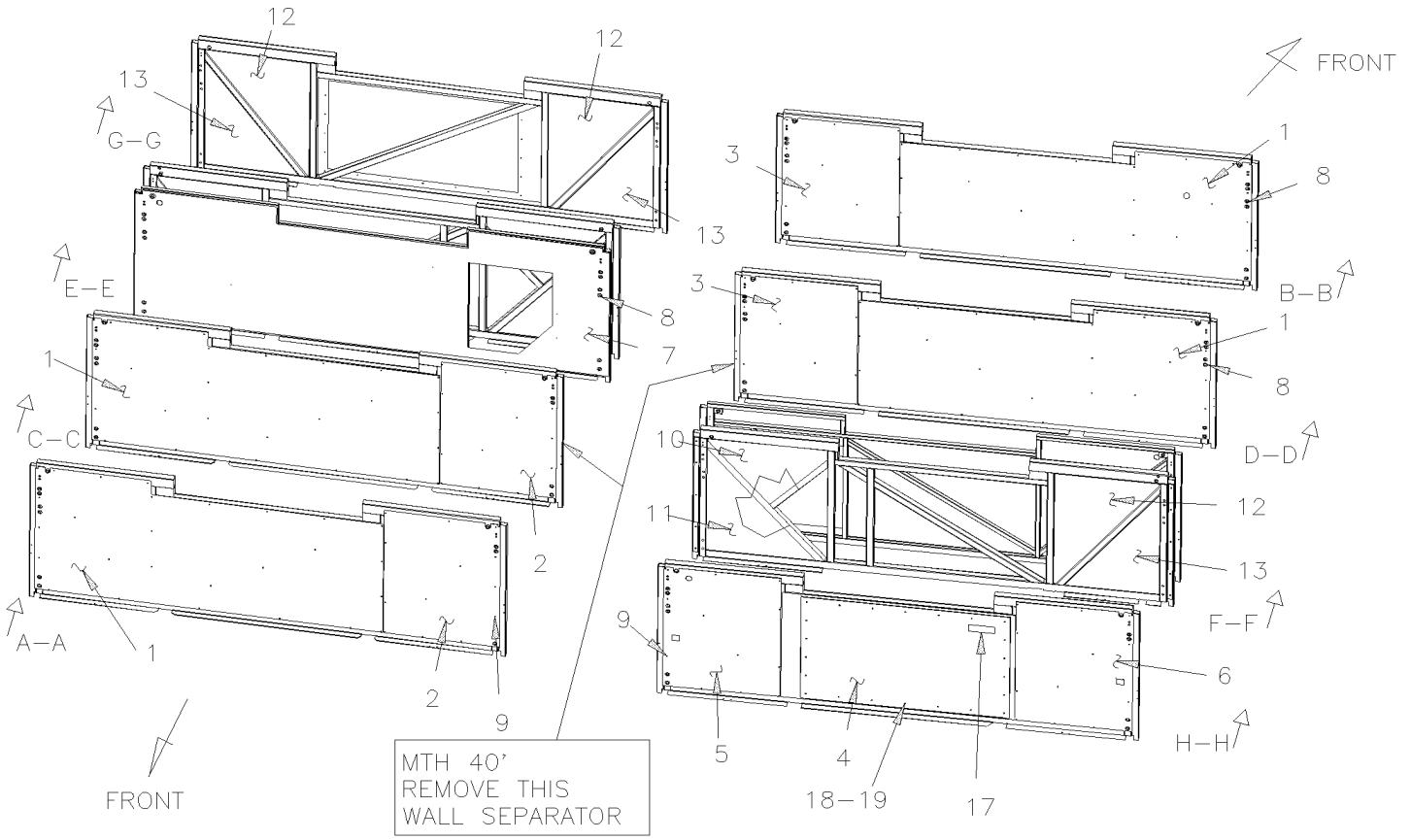

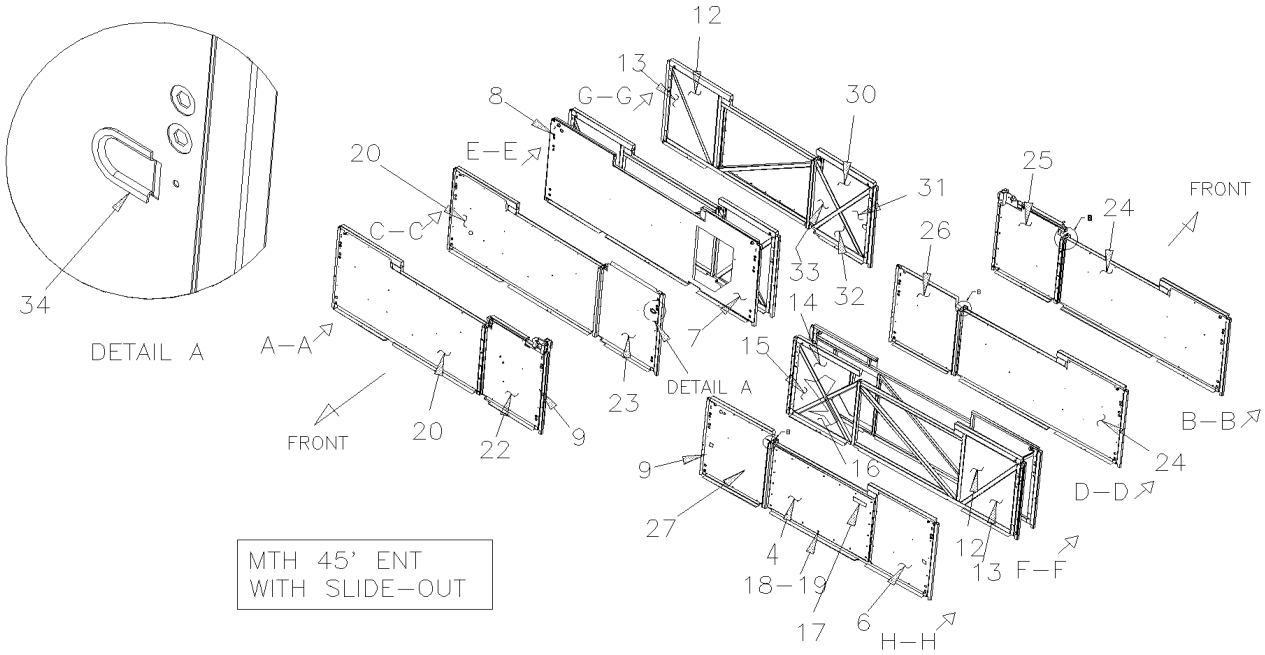

From 6-8806 To 8-9339		Date:07/2024	PAGE:Y2-1865-61
SEPARATOR PANEL - BAGGAGE COMPARTMENT - MTH			

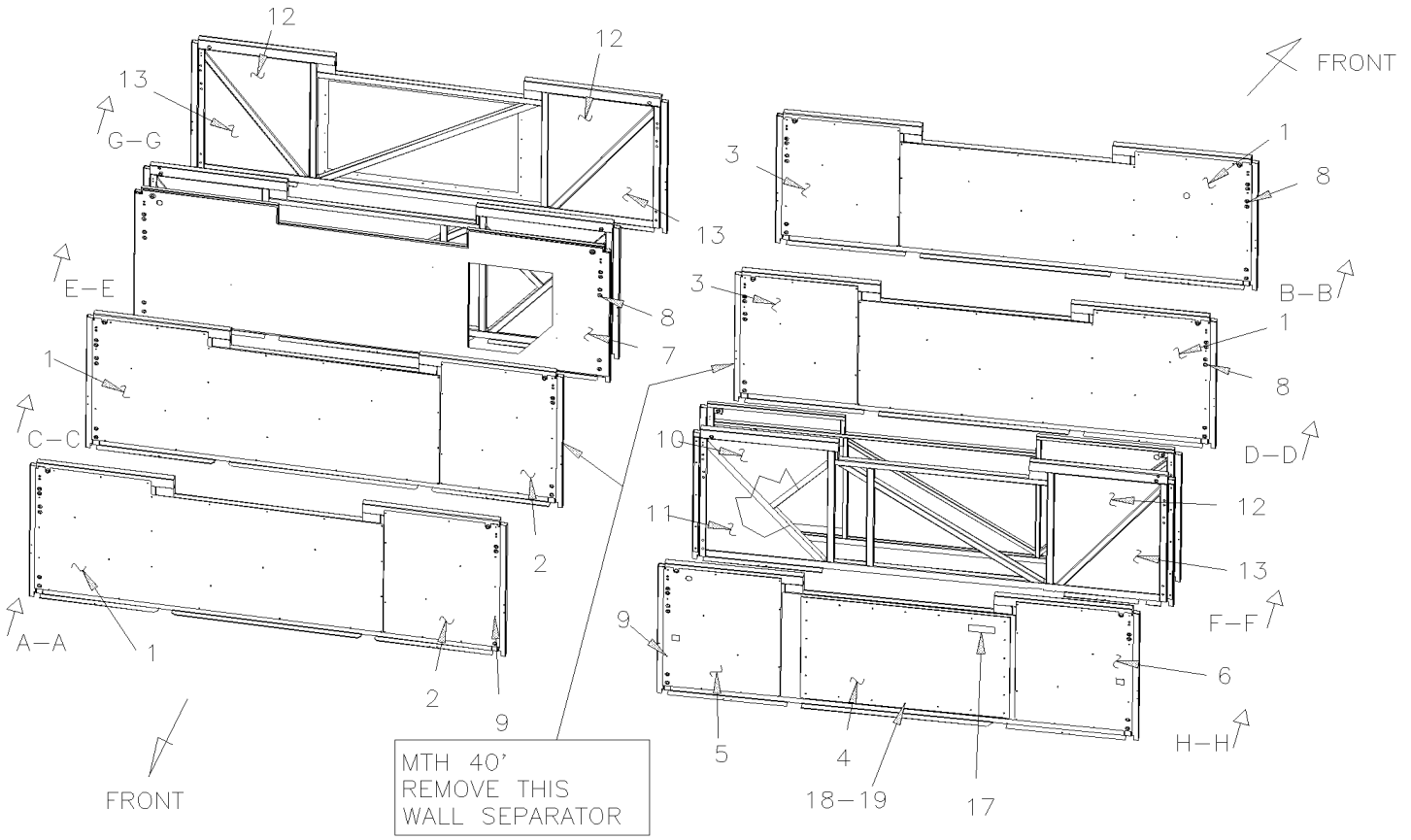

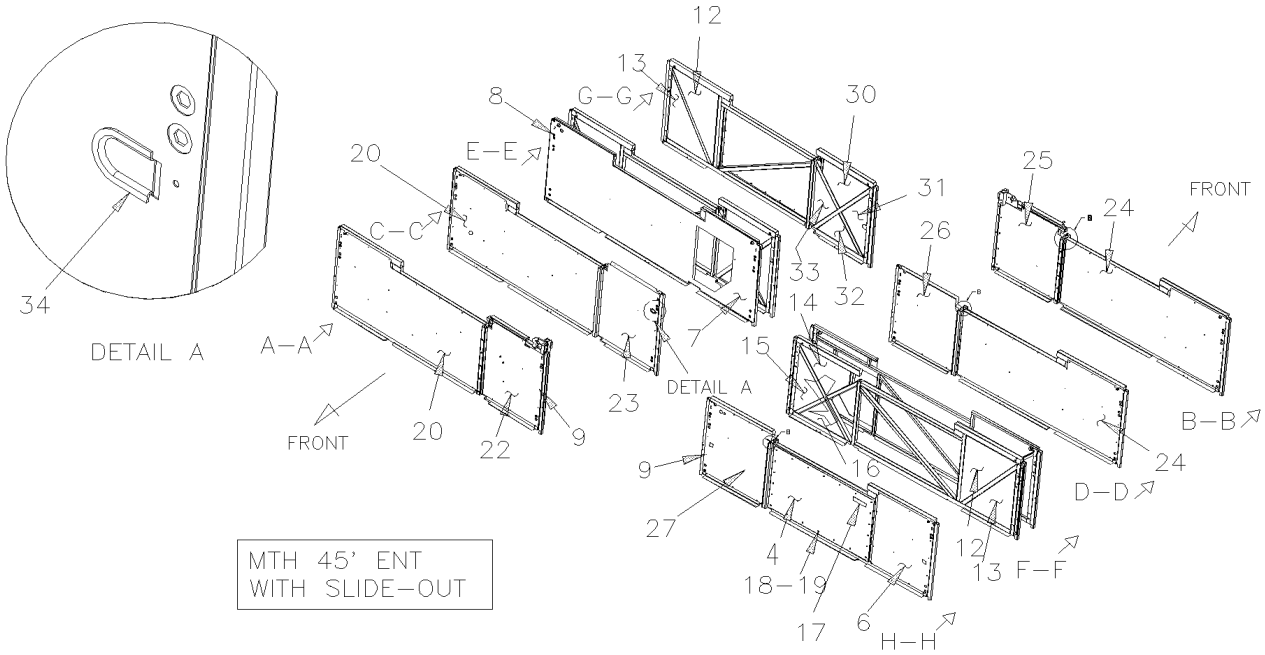

From 6-8806 To 8-9339		Date:07/2024	PAGE:Y2-1865-61

SEPARATOR PANEL - BAGGAGE COMPARTMENT - MTH

Item#	Part	Description	XLII 45	XLII MTH40	XLII MTH45	XLII MTH45E	NOTES
1	485512	PANEL SIDE & CENTER SEPARATOR To 5-8813		2			
1	485512	PANEL SIDE & CENTER SEPARATOR To 7-9095				4	
1	484066	PANEL SIDE & CENTER SEPARATOR From 7-9096				4	
2	482427	PANEL SIDE SEPARATOR To 5-8813		2			
2	482427	PANEL SIDE SEPARATOR				4	
3	485523	PANEL SIDE SEPARATOR To 5-8813		2			
3	485523	PANEL SIDE SEPARATOR To 7-9095				4	
3	484068	PANEL SIDE SEPARATOR From 7-9096				4	
4	482519	PANEL FUEL TANK CLOSING		1		1	
5	485521	PANEL SIDE SEPARATOR		1		1	
5	482471	PANEL SIDE SEPARATOR		1		1	
6	485535	PANEL SIDE SEPARATOR		1		1	
6	482427	PANEL SIDE SEPARATOR		1		1	A
7	215803	PANEL FUEL TANK CLOSING SS From 6-8806				1	
7	215868	PANEL FUEL TANK CLOSING SS W/SMALL A/C SYSTEM To 8-8805				1	
7	215877	PANEL FUEL TANK CLOSING SS From 8-8806				1	
8	504528	HOLE PLUG BUTTON / .437 O.D. BLACK		AR		AR	
9	504347	RIVET POP DOME OE 3/16x1/4 AL		AR		AR	
10	351662	INSULATOR PANEL		1		1	
11	351663	INSULATOR PANEL		1		1	
12	355878	INSULATOR PANEL		3		3	
13	355879	INSULATOR PANEL		3		3	
14	351652	INSULATOR PANEL / W/SLIDE OUT				1	
15	351653	INSULATOR PANEL / W/SLIDE OUT				1	
16	351654	INSULATOR PANEL / W/SLIDE OUT				1	
17	031163	DECAL / "FUEL TANK ACCESS" / ENGLISH		1		1	
17	032561	DECAL / "FUEL TANK ACCESS" / ENGLISH & SPANISH		1		1	
18	500657	SCREW TC TR PH #10-24x1/2 Z050		22		22	
19	506071	TAPE RUB ADH1 CC POL 1/8" x 1/2" x 50' / GREY 2520X		AR		AR	
20	482499	PANEL SIDE & CENTER SEPARATOR / W/SLIDE OUT To 7-9095				2	
20	484060	PANEL SIDE & CENTER SEPARATOR / W/SLIDE OUT From 7-9096				2	
22	484035	PANEL SIDE & CENTER SEPARATOR / W/SLIDE OUT To 7-9095				1	
22	484062	PANEL SIDE & CENTER SEPARATOR / W/SLIDE OUT From 7-9096				1	
23	485476	PANEL SIDE SEPARATOR / W/SLIDE OUT				1	
24	482518	PANEL SIDE & CENTER SEPARATOR / W/SLIDE OUT To 7-9095				2	
24	484061	PANEL SIDE & CENTER SEPARATOR / W/SLIDE OUT From 7-9096				2	
25	482477	PANEL SIDE SEPARATOR / W/SLIDE OUT To 7-9095				1	
25	484063	PANEL SIDE SEPARATOR / W/SLIDE OUT From 7-9096				1	
26	485475	PANEL SIDE SEPARATOR / W/SLIDE OUT				1	
27	482469	PANEL SIDE SEPARATOR / W/SLIDE OUT				1	
27	485458	PANEL SIDE SEPARATOR / W/SLIDE OUT & SMALL A/C		1		1	
30	355877	INSULATOR PANEL / W/SLIDE OUT				1	

From 6-8806 To 8-9339		Date:07/2024	PAGE:Y2-1865-61

SEPARATOR PANEL - BAGGAGE COMPARTMENT - MTH

Item#	Part	Description	XLII 45	XLII MTH40	XLII MTH45	XLII MTH45E	NOTES
31	355874	INSULATOR PANEL / W/SLIDE OUT				1	
32	355875	INSULATOR PANEL / W/SLIDE OUT				1	
33	355876	INSULATOR PANEL / W/SLIDE OUT				1	
34	506338	RUBBER CHANNEL / 1/16" x 1/4" INT "U" SHAPE / ROUND C.T.L.		AR		AR	
40	484013	ACCESS PANEL		1		1	
41	484015	COVER		1		1	
42	484026	FRAME		1		1	
		A) WITH SMALL A/C SYSTEM					

From Y-7046 To 6-8906		Date:07/2024	PAGE:Y2-1866-00
EVAPORATOR DOOR ASSY - BUS			

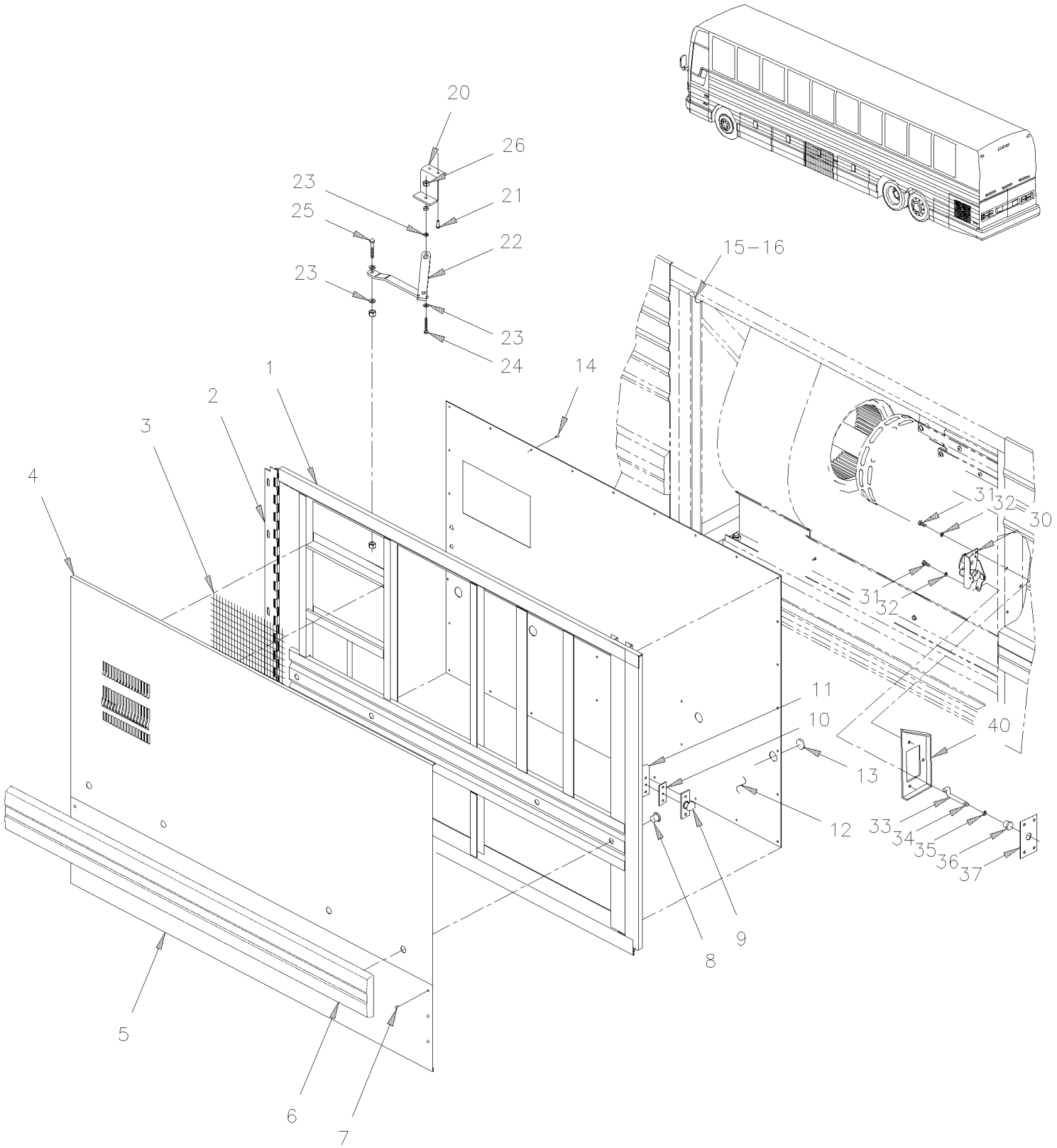

From Y-7046 To 6-8906		Date:07/2024	PAGE:Y2-1866-00

EVAPORATOR DOOR ASSY - BUS

Item#	Part	Description	XLII 45	XLII MTH40	XLII MTH45	XLII MTH45E	NOTES
		ALL EVAPORATOR DOORS ASSY DO NOT INCLUDE					
		RUB-RAIL PLEASE ORDER SEPARATELY					
	483261P	EVAPORATOR DOOR ASSY / W/FLAT PANEL To 2-7839	1				
	483554P	EVAPORATOR DOOR ASSY / W/FLAT PANEL From 2-7840	1				
1	483132	. DOOR FRAME (WELDED) To 2-7839	1				
1	483528	. DOOR FRAME (WELDED) From 2-7840	1				
NS	483580	. KIT INSULATING PANEL From 2-7840	1				
2	481840	. REINFORCEMENT OF HINGE / 31 7/8" X GA11 STRUCTURE SIDE	1				
NS	481131	. SHIM 2" X 1"1/8 / HINGE SUPPORT	9				
NS	5001184	. SCREW TP PAN PH #12x1/2 SS	7				
NS	500316	. SCREW MA FL PH 1/4-28x3/4 SS	5				
3	452987	. GRILL	1				
NS	680532	. SEALANT SIKA #221 / GREY / 310ml CARTRIDGE	1				
4	474225	. PANEL, UPPER / FLAT To 2-7839	1				
4	475413	. PANEL, UPPER / FLAT From 2-7840 To 5-8358	1				
4	477491	. PANEL, UPPER / FLAT From 5-8359	1				
4	477455	. PANEL, UPPER / FLAT / "SPECIAL OPTION" HYDRO QC	1				
4	474055	. PANEL, UPPER / S.B. To 2-7839	1				A
4	483646	. PANEL, UPPER / S.B. From 2-7840 To 5-8358	1				A
4	485423	. PANEL, UPPER / S.B. From 5-8359	1				A
4	477489	. PANEL, UPPER / S.B. From 5-8359	1				A
5	473446	. PANEL, LOWER / S.B. To 2-7839	1				
5	483600	. PANEL, LOWER / S.B. From 2-7840	1				
6	**Y2-1855-00**	**. RUB RAIL - EXTERIOR CREST & TRIMS**					
7	504272	. RIVET CHY Q BRAZ 3/16x1/8 SS	18				
8	500301	. NUT HEXF STO 3/8-16 Z050	4				
NS	473378	. SEAL WASHER / RUB RAIL & PANEL	4				
9	780278	. PIN, STRIKER STUD	1				
NS	500316	. SCREW MA FL PH 1/4-28x3/4 SS	2				
NS	502582	. WASHER LO SERR 6.1x16.2x0.9 Z050	2				
NS	500692	. NUT HEX 1/4-28 Z050	2				
10	283326	. STRIKER PLATE, MOUNTING / 60MM X 25MM	1				
11	284556	. STRIKER SUPPORT 86 x 25 x 60	1				
NS	500163	. SCREW CAP HEX 1/4-20x3/4 G5 Z050	2				
NS	502583	. WASHER LO SERR 8.15x22.3x1.0 Z050	2				
12	482828	. INTERIOR PANEL To 2-7839	1				
12	483601	. INTERIOR PANEL From 2-7840 To 5-8358	1				
12	483809	. INTERIOR PANEL From 5-8359	1				
12	485414	. INTERIOR PANEL / "SPECIAL OPTION" HYDRO QC	1				
13	504433	. SNAP-IN PLUG / 1.090 O.D.	4				

From Y-7046 To 6-8906		Date:07/2024	PAGE:Y2-1866-00

EVAPORATOR DOOR ASSY - BUS

Item#	Part	Description	XLII 45	XLII MTH40	XLII MTH45	XLII MTH45E	NOTES
14	504347	. RIVET POP DOME OE 3/16x1/4 AL	AR				
NS	064990	. CABLE ASSY / SIDE MARKER LAMP FOR DOORS To 5-8358	2				
. NS	473832	. . GROMMET 2 HOLESx1.6x11.0MMx2.0MMx8.0MMx16MM To 5-8358	1				
NS	067207	. CABLE ASSY / SIDE MARKER LAMP FOR DOORS	2				
. NS	473832	. . GROMMET 2 HOLESx1.6x11.0MMx2.0MMx8.0MMx16MM	1				
NS	504068	. GROMMET / .500x.750x.062x.312x1.062 To 5-8358	2				
NS	504397	. GROMMET / .750x1.062x.062x.375x1.375 From 5-8359	2				
15	482096	WEATHERSTRIP / EVAPORATOR DOOR To 2-7839	1				
15	483555	WEATHERSTRIP / EVAPORATOR DOOR From 2-7840	1				
16	482137	MOULDING / WEATHERSTRIP RETAINER To 2-7839	1				
16	**Y2-1854-10**	**WEATHERSTRIP & RETAINER - BUS**					
20	481839	SUPPORT ASSY / DOOR GUIDE	1				
21	500535	SCREW TP CAP HEX #14x3/4 Z050	2				
22	281445	GUIDE ASSY / R.H. DOOR To 2-7831	1				
22	288031	GUIDE ASSY / R.H. DOOR From 2-7832	1				
23	500441	WASHER FL .312x.734x.065 Z050	3				
24	500165	SCREW CAP HEX 1/4-20x1 G5 Z050	1				
25	500556	SCREW MA TR PH 1/4-20x3/4 SS	1				
26	500769	NUT HEX 1/4-20 Z050	2				
30	780282	LOCK SPAGNOLET L.H.	1				
31	502531	SCREW CAP HEX M6-1.0x16 G8.8 Z050	2				
32	502582	WASHER LO SERR 6.1x16.2x0.9 Z050	2				
33	284596	ROD OPENING 68MM	1				
34	504083	SNAP BUSHING / .250x.468.406	1				
35	500764	NUT HEX #8-32 Z050	1				
36	505504	KNOB, PULL / 8-32	1				
37	482726	CLOSING PLATE 30MM X 50MM / SS	1				
NS	504473	RIVET POP DOME OE 1/8x1/4 SS	1				
40	284555	LOCK SUPPORT / (WELDED TO STRUCTURE)	1				
		A) USE WITH BUS WITH FLUTED LOWER PANELLING					

From Y-7046 To 6-8805		Date:07/2024	PAGE:Y2-1866-50
EVAPORATOR DOOR ASSY - MTH			

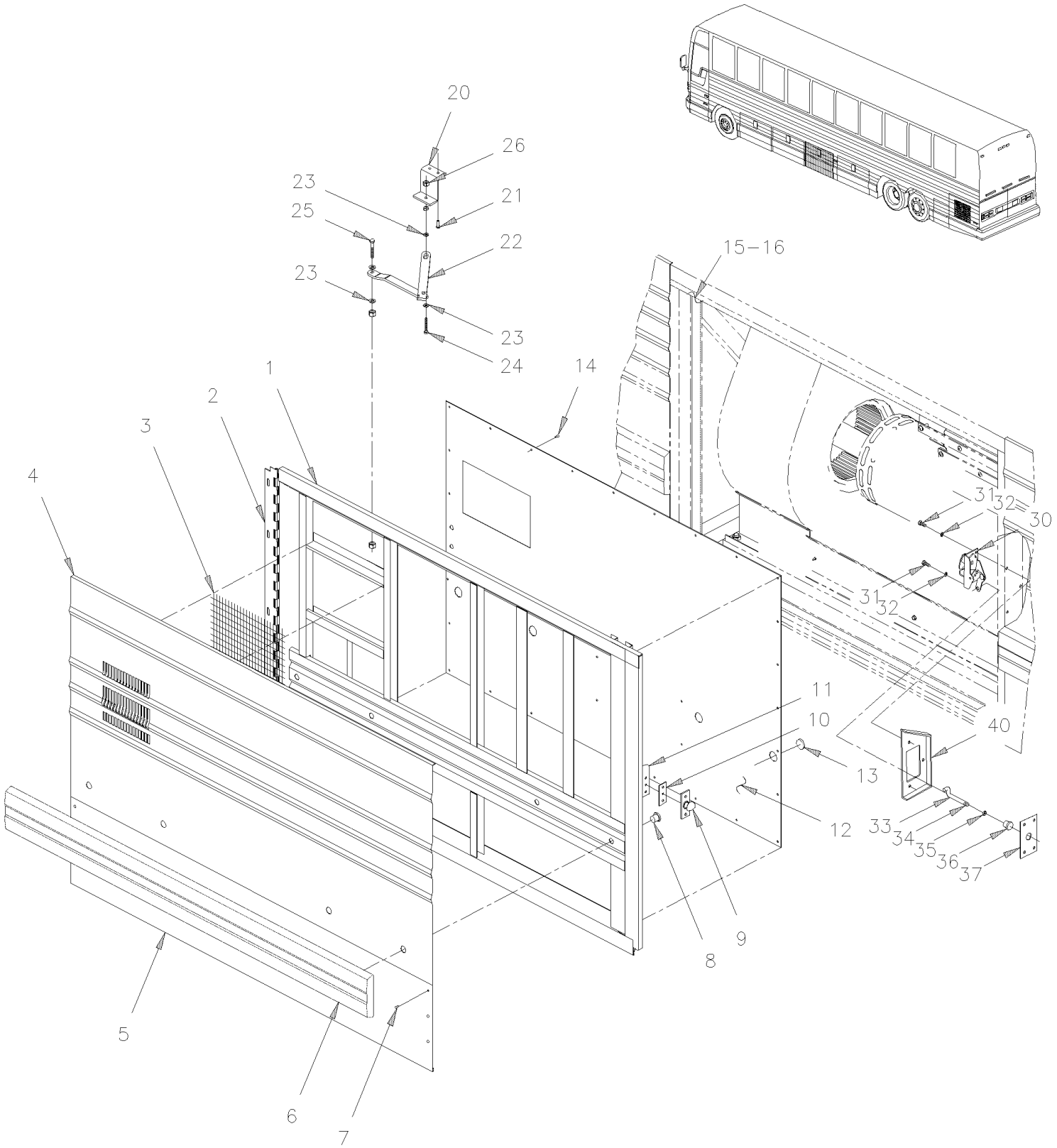

From Y-7046 To 6-8805		Date:07/2024	PAGE:Y2-1866-50

EVAPORATOR DOOR ASSY - MTH

Item#	Part	Description	XLII 45	XLII MTH40	XLII MTH45	XLII MTH45E	NOTES
		ALL EVAPORATOR DOORS ASSY DO NOT INCLUDE					
		RUB-RAIL PLEASE ORDER SEPARATELY					
	482989P	EVAPORATOR DOOR ASSY		1		1	
	482974P	EVAPORATOR DOOR ASSY			1		
1	483172	. DOOR FRAME (WELDED)		1		1	
1	483132	. DOOR FRAME (WELDED)			1		
NS	483580	. KIT INSULATING PANEL From 2-7840			1		
2	481840	. REINFORCEMENT OF HINGE / 31 7/8" X GA11 STRUCTURE SIDE		1	1	1	
NS	481131	. SHIM 2" X 1"1/8 / HINGE SUPPORT		9	9	9	
NS	5001184	. SCREW TP PAN PH #12x1/2 SS		7	7	7	
NS	500316	. SCREW MA FL PH 1/4-28x3/4 SS		5	5	5	
3	452987	. GRILL		1	1	1	
NS	680532	. SEALANT SIKA #221 / GREY / 310ml CARTRIDGE		1	1	1	
4	482985	. PANEL, UPPER / S.B. To 5-8358		1		1	
4	483801	. PANEL, UPPER / S.B. From 5-8359 To 5-8468		1		1	
4	483938	. PANEL, UPPER / B.A. From 5-8469		1		1	
4	474055	. PANEL, UPPER / S.B. To 5-8358			1		
4	477489	. PANEL, UPPER / S.B. From 5-8359 To 5-8468			1		
4	477666	. PANEL, UPPER / B.A. From 5-8469			1		
5	473445	. PANEL, LOWER / S.B. To 5-8468		1		1	
5	477668	. PANEL, LOWER / B.A. From 5-8469		1		1	
5	473446	. PANEL, LOWER / S.B. To 5-8468			1		
5	477667	. PANEL, LOWER / B.A. From 5-8469			1		
6	**Y2-1855-00**	**. RUB RAIL - EXTERIOR CREST & TRIMS**					
7	504272	. RIVET CHY Q BRAZ 3/16x1/8 SS		18	18	18	
8	500301	. NUT HEXF STO 3/8-16 Z050		4	4	4	
NS	473378	. SEAL WASHER / RUB RAIL & PANEL		4	4	4	
9	780278	. PIN, STRIKER STUD		1	1	1	
NS	500316	. SCREW MA FL PH 1/4-28x3/4 SS		2	2	2	
NS	502582	. WASHER LO SERR 6.1x16.2x0.9 Z050		2	2	2	
NS	500692	. NUT HEX 1/4-28 Z050		2	2	2	
10	283326	. STRIKER PLATE, MOUNTING / 60MM X 25MM		1	1	1	
11	284556	. STRIKER SUPPORT 86 x 25 x 60		1	1	1	
NS	500163	. SCREW CAP HEX 1/4-20x3/4 G5 Z050		2	2	2	
NS	502583	. WASHER LO SERR 8.15x22.3x1.0 Z050		2	2	2	
12	482828	. INTERIOR PANEL To 5-8358			1		
12	483802	. INTERIOR PANEL From 5-8359			1		
12	483028	. INTERIOR PANEL To 5-8358		1		1	
12	483810	. INTERIOR PANEL From 5-8359		1		1	
13	504433	. SNAP-IN PLUG / 1.090 O.D.		4	4	4	

From Y-7046 To 6-8805		Date:07/2024	PAGE:Y2-1866-50

EVAPORATOR DOOR ASSY - MTH

Item#	Part	Description	XLII 45	XLII MTH40	XLII MTH45	XLII MTH45E	NOTES
14	504347	. RIVET POP DOME OE 3/16x1/4 AL		AR	AR	AR	
NS	064990	. CABLE ASSY / SIDE MARKER LAMP FOR DOORS To 5-8358			2		
. NS	473832	. . GROMMET 2 HOLESx1.6x11.0MMx2.0MMx8.0MMx16MM To 5-8358			1		
NS	067207	. CABLE ASSY / SIDE MARKER LAMP FOR DOORS			2		
. NS	473832	. . GROMMET 2 HOLESx1.6x11.0MMx2.0MMx8.0MMx16MM			1		
NS	504068	. GROMMET / .500x.750x.062x.312x1.062 To 5-8358			2		
NS	504397	. GROMMET / .750x1.062x.062x.375x1.375 From 5-8359			2		
15	482096	WEATHERSTRIP / EVAPORATOR DOOR			1		
15	481163	WEATHERSTRIP / EVAPORATOR DOOR		1		1	
16	482137	MOULDING / WEATHERSTRIP RETAINER		1	1	1	
16	**Y2-1854-20**	**WEATHERSTRIP & RETAINER - MTH**					
20	481839	SUPPORT ASSY / DOOR GUIDE		1	1	1	
21	500535	SCREW TP CAP HEX #14x3/4 Z050		2	2	2	
22	281445	GUIDE ASSY / R.H. DOOR To 2-7831		1	1	1	
22	288031	GUIDE ASSY / R.H. DOOR From 2-7832		1	1	1	
23	500441	WASHER FL .312x.734x.065 Z050		3	3	3	
24	500165	SCREW CAP HEX 1/4-20x1 G5 Z050		1	1	1	
25	500556	SCREW MA TR PH 1/4-20x3/4 SS		1	1	1	
26	500769	NUT HEX 1/4-20 Z050		2	2	2	
30	780282	LOCK SPAGNOLET L.H.		1	1	1	
31	502531	SCREW CAP HEX M6-1.0x16 G8.8 Z050		2	2	2	
32	502582	WASHER LO SERR 6.1x16.2x0.9 Z050		2	2	2	
33	284596	ROD OPENING 68MM		1	1	1	
33	287170	ROD OPENING 228MM			1		C
34	504083	SNAP BUSHING / .250x.468.406		1	1	1	
35	500764	NUT HEX #8-32 Z050		1	1	1	
36	505504	KNOB, PULL / 8-32		1	1	1	
37	482726	CLOSING PLATE 30MM X 50MM / SS		1	1	1	
NS	504473	RIVET POP DOME OE 1/8x1/4 SS		1	1	1	
37	482453	SUPPORT			1		C
40	284555	LOCK SUPPORT / (WELDED TO STRUCTURE)		1	1	1	
		C) WITH SLIDE-OUT					

From 6-8806 To 8-9339		Date:07/2024	PAGE:Y2-1866-51
EVAPORATOR DOOR ASSY - MTH			

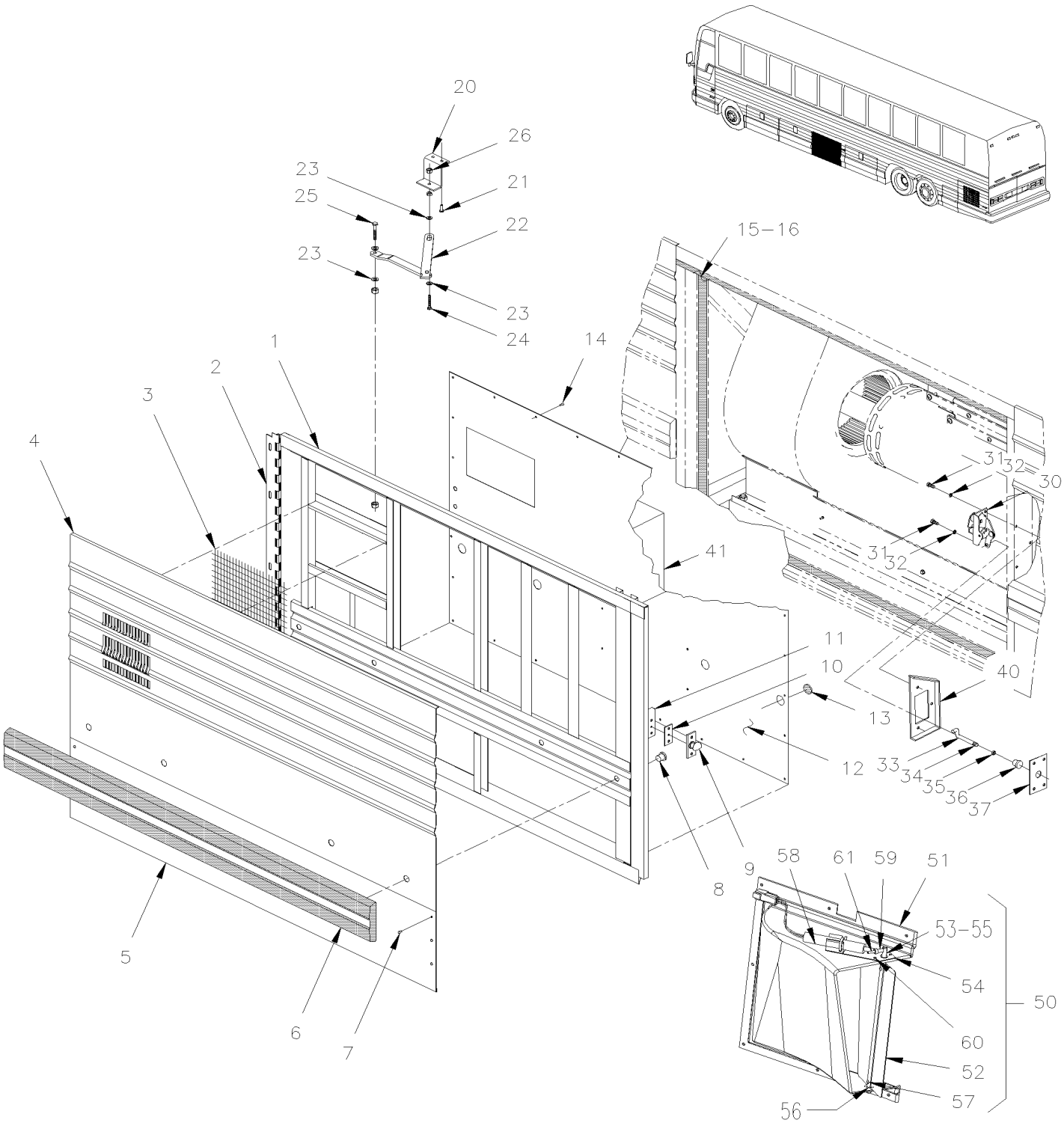

From 6-8806 To 8-9339		Date:07/2024	PAGE:Y2-1866-51

EVAPORATOR DOOR ASSY - MTH

Item#	Part	Description	XLII 45	XLII MTH40	XLII MTH45	XLII MTH45E	NOTES
		ALL EVAPORATOR DOORS ASSY DO NOT INCLUDE					
		RUB-RAIL PLEASE ORDER SEPARATELY					
	Call order desk	EVAPORATOR DOOR ASSY		1		1	P
	483645P	EVAPORATOR DOOR ASSY			1		
1	485482	. DOOR FRAME (WELDED)		1		1	
1	483995	. DOOR FRAME (WELDED)			1		
. NS	483552	. . HINGE			1		
NS	Call order desk	. KIT INSULATING PANEL			1		P
1	485491	. KIT INSULATING PANEL		1		1	
2	481840	. REINFORCEMENT OF HINGE / 31 7/8" X GA11 STRUCTURE SIDE		1	1	1	
NS	481131	. SHIM 2" X 1"1/8 / HINGE SUPPORT		9	9	9	
NS	500124	. SCREW TP TR PH #8x1/2 SS		7	7	7	
NS	500316	. SCREW MA FL PH 1/4-28x3/4 SS		5	5	5	
3	453997	. GASKET		1	1	1	
NS	871382	. FILTER SCREEN 12" x 12"		1	1	1	
NS	680532	. SEALANT SIKA #221 / GREY / 310ml CARTRIDGE		1	1	1	
4	485489	. PANEL, UPPER		1		1	
4	485447	. PANEL, UPPER			1		
5	485488	. PANEL, LOWER		1		1	
5	485446	. PANEL, LOWER			1		
6	**Y2-1855-00**	**. RUB RAIL - EXTERIOR CREST & TRIMS**					
7	504272	. RIVET CHY Q BRAZ 3/16x1/8 SS		18	18	18	
8	500301	. NUT HEXF STO 3/8-16 Z050		4	4	4	
NS	473378	. SEAL WASHER / RUB RAIL & PANEL		4	4	4	
9	780278	. PIN, STRIKER STUD		1	1	1	
NS	500316	. SCREW MA FL PH 1/4-28x3/4 SS		2	2	2	
NS	502582	. WASHER LO SERR 6.1x16.2x0.9 Z050		2	2	2	
NS	500692	. NUT HEX 1/4-28 Z050		2	2	2	
10	283326	. STRIKER PLATE, MOUNTING / 60MM X 25MM		1	1	1	
11	284556	. STRIKER SUPPORT 86 x 25 x 60		1	1	1	
NS	500163	. SCREW CAP HEX 1/4-20x3/4 G5 Z050		2	2	2	
NS	502583	. WASHER LO SERR 8.15x22.3x1.0 Z050		2	2	2	
12	483998	. INTERIOR PANEL			1		
12	485487	. INTERIOR PANEL		1		1	
13	504433	. SNAP-IN PLUG / 1.090 O.D.		4	4	4	
14	504347	. RIVET POP DOME OE 3/16x1/4 AL		AR	AR	AR	
15	483555	WEATHERSTRIP / EVAPORATOR DOOR			1		
15	485499	WEATHERSTRIP / EVAPORATOR DOOR		1		1	
16	214684	SEAL DOOR RETAINER / FORWARD DOOR		1	1	1	
16	**Y2-1854-20**	**WEATHERSTRIP & RETAINER - MTH**					

From 6-8806 To 8-9339		Date:07/2024	PAGE:Y2-1866-51

EVAPORATOR DOOR ASSY - MTH

Item#	Part	Description	XLII 45	XLII MTH40	XLII MTH45	XLII MTH45E	NOTES
20	481839	SUPPORT ASSY / DOOR GUIDE		1	1	1	
21	500535	SCREW TP CAP HEX #14x3/4 Z050		2	2	2	
22	281445	GUIDE ASSY / R.H. DOOR		1	1	1	
22	288031	GUIDE ASSY / R.H. DOOR		1	1	1	
23	502638	WASHER FL .312x.734x.065 N500		3	3	3	
24	500165	SCREW CAP HEX 1/4-20x1 G5 Z050		1	1	1	
25	500171	SCREW CAP HEX 1/4-20x1 G5 N500		1	1	1	
26	500247	NUT HEX 1/4-20 N500		2	2	2	
30	780282	LOCK SPAGNOLET L.H.		1	1	1	
31	955271	SCREW CAP HEX M6-1.0x16 G8.8 ZG603		2	2	2	
32	500356	WASHER LO SERR 6.1x16.0x0.9 N500		2	2	2	
33	284596	ROD OPENING 68MM		1	1	1	
33	287170	ROD OPENING 228MM			1		S
34	504083	SNAP BUSHING / .250x.468.406		1	1	1	
35	500764	NUT HEX #8-32 Z050		1	1	1	
36	505504	KNOB, PULL / 8-32		1	1	1	
37	482657	CLOSING PLATE 58MM X 58MM / SS		1	1	1	
NS	504473	RIVET POP DOME OE 1/8x1/4 SS		1	1	1	
37	504083	SNAP BUSHING / .250x.468.406		1	1	1	
40	284555	LOCK SUPPORT / (WELDED TO STRUCTURE)		1	1	1	
40	482453	SUPPORT			1	1	S
41	**Y2-0621-00**	**A/C JUNCTION BOX ASSY**					
41	**Y2-0621-50**	**A/C CONDENSOR MOTOR RELAY**					
50	Call order desk	DAMPER TRAP ASSY		1	1	1	P
51	374151	. DEFLECTOR PANEL		1	1	1	
52	374171	. DAMPER		1	1	1	
53	374172	. ROD		1	1	1	
54	374173	. PLATE FIXTURE		1	1	1	
55	507309	. BUSHING NYLINED .312x.375x.078x.500		1	1	1	
56	500975	. WASHER FL .378x.620x.094 NYL		1	1	1	
57	504339	. RIVET POP DOME OE 1/8x3/8 SS		1	1	1	
58	373415	. ACTUATOR ASSY		1	1	1	
59	374021	. TUBE NYLON #4 12MM		1	1	1	
60	504340	. RIVET POP DOME OE 1/8x3/16 SS		5	5	5	
61	502243	. SPRING PIN		1	1	1	
NS	064990	CABLE ASSY / SIDE MARKER LAMP FOR DOORS		1	1	1	
. NS	473832	. GROMMET 2 HOLESx1.6x11.0MMx2.0MMx8.0MMx16MM		1	1	1	
NS	067207	CABLE ASSY / SIDE MARKER LAMP FOR DOORS		1	1	1	
. NS	473832	. GROMMET 2 HOLESx1.6x11.0MMx2.0MMx8.0MMx16MM		1	1	1	

From 6-8806 To 8-9339		Date:07/2024	PAGE:Y2-1866-51

EVAPORATOR DOOR ASSY - MTH

Item#	Part	Description	XLII 45	XLII MTH40	XLII MTH45	XLII MTH45E	NOTES
		S) WITH SLIDE-OUT					
		P) CALL ORDER DESK FOR SPECIFIC APPLICATION (V.I.N.)					

From Y-7046 To 8-9339		Date:07/2024	PAGE:Y2-1867-00
KEY & CYLINDER CODE "FORD" & "NS"			

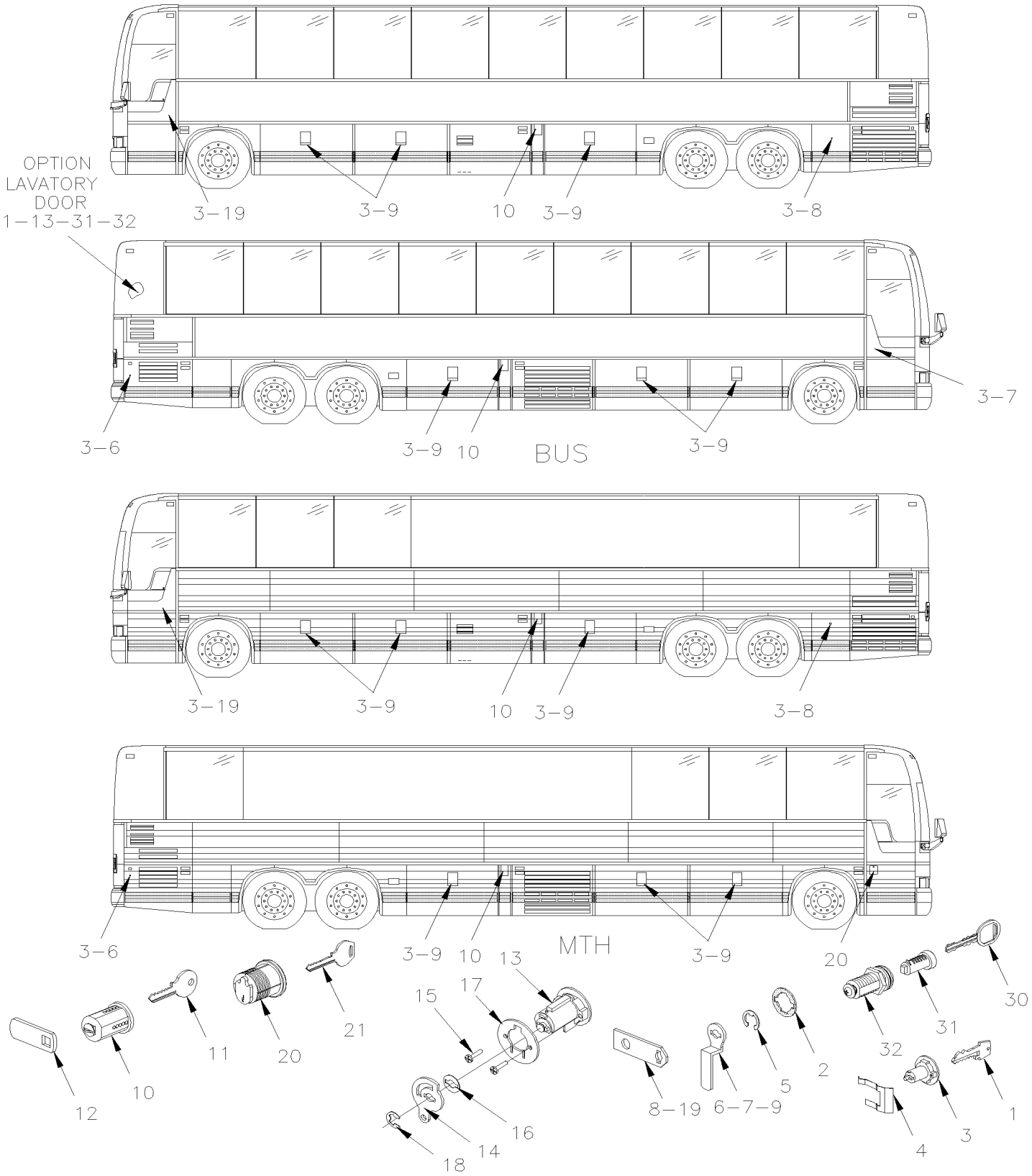

From Y-7046 To 8-9339		Date:07/2024	PAGE:Y2-1867-00

KEY & CYLINDER CODE "FORD" & "NS"

Item#	Part	Description	XLII 45	XLII MTH40	XLII MTH45	XLII MTH45E	NOTES
	780238	KEY BLANK UNCUT	AR	AR	AR	AR	
1	282179	KEY CODE / 00		1	1	1	
1	282180	KEY CODE / 01		1	1	1	
1	282181	KEY CODE / 02		1	1	1	
1	282182	KEY CODE / 03		1	1	1	
1	282183	KEY CODE / 04		1	1	1	
1	282184	KEY CODE / 05		1	1	1	
1	282185	KEY CODE / 06		1	1	1	
1	282186	KEY CODE / 07		1	1	1	
1	282187	KEY CODE / 08		1	1	1	
1	282188	KEY CODE / 09		1	1	1	
1	282189	KEY CODE / 10		1	1	1	
1	282190	KEY CODE / 11		1	1	1	
1	282191	KEY CODE / 12		1	1	1	
1	282192	KEY CODE / 13		1	1	1	
1	282193	KEY CODE / 14		1	1	1	
1	282194	KEY CODE / 15		1	1	1	
1	282195	KEY CODE / 16		1	1	1	
1	282196	KEY CODE / 17		1	1	1	
1	282197	KEY CODE / 18		1	1	1	
1	282198	KEY CODE / 19		1	1	1	
1	282199	KEY CODE / 20		1	1	1	
1	282200	KEY CODE / 21		1	1	1	
1	282201	KEY CODE / 22		1	1	1	
1	282202	KEY CODE / 23		1	1	1	
1	282203	KEY CODE / 24		1	1	1	
1	282204	KEY CODE / 25		1	1	1	
1	282205	KEY CODE / 26		1	1	1	
1	282206	KEY CODE / 27		1	1	1	
1	282207	KEY CODE / 28		1	1	1	
1	282208	KEY CODE / 29		1	1	1	
1	282209	KEY CODE / 30		1	1	1	
1	282210	KEY CODE / 31		1	1	1	
1	282211	KEY CODE / 32		1	1	1	
1	282212	KEY CODE / 33		1	1	1	
1	282213	KEY CODE / 34		1	1	1	
1	282214	KEY CODE / 35		1	1	1	
1	282215	KEY CODE / 36		1	1	1	
1	282216	KEY CODE / 37		1	1	1	
1	282217	KEY CODE / 38		1	1	1	

From Y-7046 To 8-9339		Date:07/2024	PAGE:Y2-1867-00

KEY & CYLINDER CODE "FORD" & "NS"

Item#	Part	Description	XLII 45	XLII MTH40	XLII MTH45	XLII MTH45E	NOTES
1	282218	KEY CODE / 39		1	1	1	
1	282219	KEY CODE / 40		1	1	1	
1	282220	KEY CODE / 41		1	1	1	
1	282221	KEY CODE / 42		1	1	1	
1	282222	KEY CODE / 43		1	1	1	
1	282223	KEY CODE / 44		1	1	1	
1	282224	KEY CODE / 45		1	1	1	
1	282225	KEY CODE / 46		1	1	1	
1	282226	KEY CODE / 47		1	1	1	
1	282227	KEY CODE / 48		1	1	1	
1	282228	KEY CODE / 49		1	1	1	
1	282229	KEY CODE / 50		1	1	1	
1	282230	KEY CODE / 51		1	1	1	
1	282231	KEY CODE / 52		1	1	1	
1	282232	KEY CODE / 53		1	1	1	
1	282233	KEY CODE / 54		1	1	1	
1	282234	KEY CODE / 55		1	1	1	
1	282235	KEY CODE / 56		1	1	1	
1	282236	KEY CODE / 57		1	1	1	
1	282237	KEY CODE / 58		1	1	1	
1	282238	KEY CODE / 59		1	1	1	
1	282239	KEY CODE / 60		1	1	1	
1	282240	KEY CODE / 61		1	1	1	
1	282241	KEY CODE / 62		1	1	1	
1	282242	KEY CODE / 63		1	1	1	
1	282243	KEY CODE / 64		1	1	1	
1	282244	KEY CODE / 65		1	1	1	
1	282245	KEY CODE / 66		1	1	1	
1	282246	KEY CODE / 67		1	1	1	
1	282247	KEY CODE / 68		1	1	1	
1	282248	KEY CODE / 69		1	1	1	
1	282249	KEY CODE / 70		1	1	1	
1	282250	KEY CODE / 71		1	1	1	
1	282251	KEY CODE / 72		1	1	1	
1	282252	KEY CODE / 73		1	1	1	
1	282253	KEY CODE / 74		1	1	1	
1	282254	KEY CODE / 75		1	1	1	
1	282255	KEY CODE / 76		1	1	1	
1	282256	KEY CODE / 77		1	1	1	
1	282257	KEY CODE / 78		1	1	1	
1	282258	KEY CODE / 79		1	1	1	
1	282259	KEY CODE / 80		1	1	1	

From Y-7046 To 8-9339		Date:07/2024	PAGE:Y2-1867-00

KEY & CYLINDER CODE "FORD" & "NS"

Item#	Part	Description	XLII 45	XLII MTH40	XLII MTH45	XLII MTH45E	NOTES
1	282260	KEY CODE / 81		1	1	1	
1	282261	KEY CODE / 82		1	1	1	
1	282262	KEY CODE / 83		1	1	1	
1	282263	KEY CODE / 84		1	1	1	
1	282264	KEY CODE / 85		1	1	1	
1	282265	KEY CODE / 86		1	1	1	
1	282266	KEY CODE / 87		1	1	1	
1	282267	KEY CODE / 88		1	1	1	
1	282268	KEY CODE / 89		1	1	1	
1	282269	KEY CODE / 90		1	1	1	
1	282270	KEY CODE / 91		1	1	1	
1	282271	KEY CODE / 92		1	1	1	
1	282272	KEY CODE / 93		1	1	1	
1	282273	KEY CODE / 94		1	1	1	
1	282274	KEY CODE / 95		1	1	1	
1	282275	KEY CODE / 96		1	1	1	
1	282276	KEY CODE / 97		1	1	1	
1	282277	KEY CODE / 98		1	1	1	
1	282278	KEY CODE / 99		1	1	1	
1	780217	KEY CODE / FA 0000	1				
1	780218	KEY CODE / FA 0050	1				
1	780219	KEY CODE / FA 0100	1				
1	780220	KEY CODE / FA 0221	1				
1	780221	KEY CODE / FA 0225	1				
1	780222	KEY CODE / FA 0300	1				
1	780223	KEY CODE / FA 0400	1				
1	780224	KEY CODE / FA 0500	1				
1	780225	KEY CODE / FA 0600	1				
1	780226	KEY CODE / FA 0800	1				
1	282427	KEY CODE / FA 1212	1				
1	780654	KEY CODE / FA 0001	AR				
1	780624	KEY CODE / FA 0028	AR				
1	780649	KEY CODE / FA 0055	AR				
1	780604	KEY CODE / FA 0013	AR				
1	780656	KEY CODE / FA 0109	AR				
1	780627	KEY CODE / FA 0113	AR				
1	780829	KEY CODE / FA 0150	AR				
1	780543	KEY CODE / FA 0169	AR				
1	780599	KEY CODE / FA 0190	AR				
1	780530	KEY CODE / FA 0199	AR				
1	780659	KEY CODE / FA 0208	AR				
1	780597	KEY CODE / FA 0221	AR				

From Y-7046 To 8-9339		Date:07/2024	PAGE:Y2-1867-00

KEY & CYLINDER CODE "FORD" & "NS"

Item#	Part	Description	XLII 45	XLII MTH40	XLII MTH45	XLII MTH45E	NOTES
1	780572	KEY CODE / FA 0268	AR				
1	780582	KEY CODE / FA 0368	AR				
1	780610	KEY CODE / FA 0506	AR				
1	780622	KEY CODE / FA 0528	AR				
1	780585	KEY CODE / FA 0532	AR				
1	780791	KEY CODE / FA 0563	AR				
1	780534	KEY CODE / FA 0648	AR				
1	780641	KEY CODE / FA 0704	AR				
1	780608	KEY CODE / FA 0714	AR				
1	780632	KEY CODE / FA 0692	AR				
1	780601	KEY CODE / FA 1252	AR				
1	780550	KEY CODE / FA 1320	AR				
1	780644	KEY CODE / FA 1343	AR				
1	780545	KEY CODE / FA 1486	AR				
1	780548	KEY CODE / FA 1549	AR				
2	780237	SEAL RUBBER 1/32" TH	AR	AR	AR	AR	
2	2800032	SEAL RUBBER 1/16" TH SERVICE	AR	AR	AR	AR	
3	282079	CYLINDER LOCK / CODE 00		1	1	1	
3	282080	CYLINDER LOCK / CODE 01		1	1	1	
3	282081	CYLINDER LOCK / CODE 02		1	1	1	
3	282082	CYLINDER LOCK / CODE 03		1	1	1	
3	282083	CYLINDER LOCK / CODE 04		1	1	1	
3	282084	CYLINDER LOCK / CODE 05		1	1	1	
3	282085	CYLINDER LOCK / CODE 06		1	1	1	
3	282086	CYLINDER LOCK / CODE 07		1	1	1	
3	282087	CYLINDER LOCK / CODE 08		1	1	1	
3	282088	CYLINDER LOCK / CODE 09		1	1	1	
3	282089	CYLINDER LOCK / CODE 10		1	1	1	
3	282090	CYLINDER LOCK / CODE 11		1	1	1	
3	282091	CYLINDER LOCK / CODE 12		1	1	1	
3	282092	CYLINDER LOCK / CODE 13		1	1	1	
3	282093	CYLINDER LOCK / CODE 14		1	1	1	
3	282094	CYLINDER LOCK / CODE 15		1	1	1	
3	282095	CYLINDER LOCK / CODE 16		1	1	1	
3	282096	CYLINDER LOCK / CODE 17		1	1	1	
3	282097	CYLINDER LOCK / CODE 18		1	1	1	
3	282098	CYLINDER LOCK / CODE 19		1	1	1	
3	282099	CYLINDER LOCK / CODE 20		1	1	1	
3	282100	CYLINDER LOCK / CODE 21		1	1	1	
3	282101	CYLINDER LOCK / CODE 22		1	1	1	
3	282102	CYLINDER LOCK / CODE 23		1	1	1	
3	282103	CYLINDER LOCK / CODE 24		1	1	1	

From Y-7046 To 8-9339		Date:07/2024	PAGE:Y2-1867-00

KEY & CYLINDER CODE "FORD" & "NS"

Item#	Part	Description	XLII 45	XLII MTH40	XLII MTH45	XLII MTH45E	NOTES
3	282104	CYLINDER LOCK / CODE 25		1	1	1	
3	282105	CYLINDER LOCK / CODE 26		1	1	1	
3	282106	CYLINDER LOCK / CODE 27		1	1	1	
3	282107	CYLINDER LOCK / CODE 28		1	1	1	
3	282108	CYLINDER LOCK / CODE 29		1	1	1	
3	282109	CYLINDER LOCK / CODE 30		1	1	1	
3	282110	CYLINDER LOCK / CODE 31		1	1	1	
3	282111	CYLINDER LOCK / CODE 32		1	1	1	
3	282112	CYLINDER LOCK / CODE 33		1	1	1	
3	282113	CYLINDER LOCK / CODE 34		1	1	1	
3	282114	CYLINDER LOCK / CODE 35		1	1	1	
3	282115	CYLINDER LOCK / CODE 36		1	1	1	
3	282116	CYLINDER LOCK / CODE 37		1	1	1	
3	282117	CYLINDER LOCK / CODE 38		1	1	1	
3	282118	CYLINDER LOCK / CODE 39		1	1	1	
3	282119	CYLINDER LOCK / CODE 40		1	1	1	
3	282120	CYLINDER LOCK / CODE 41		1	1	1	
3	282121	CYLINDER LOCK / CODE 42		1	1	1	
3	282122	CYLINDER LOCK / CODE 43		1	1	1	
3	282123	CYLINDER LOCK / CODE 44		1	1	1	
3	282124	CYLINDER LOCK / CODE 45		1	1	1	
3	282125	CYLINDER LOCK / CODE 46		1	1	1	
3	282126	CYLINDER LOCK / CODE 47		1	1	1	
3	282127	CYLINDER LOCK / CODE 48		1	1	1	
3	282128	CYLINDER LOCK / CODE 49		1	1	1	
3	282129	CYLINDER LOCK / CODE 50		1	1	1	
3	282130	CYLINDER LOCK / CODE 51		1	1	1	
3	282131	CYLINDER LOCK / CODE 52		1	1	1	
3	282132	CYLINDER LOCK / CODE 53		1	1	1	
3	282133	CYLINDER LOCK / CODE 54		1	1	1	
3	282134	CYLINDER LOCK / CODE 55		1	1	1	
3	282135	CYLINDER LOCK / CODE 56		1	1	1	
3	282136	CYLINDER LOCK / CODE 57		1	1	1	
3	282137	CYLINDER LOCK / CODE 58		1	1	1	
3	282138	CYLINDER LOCK / CODE 59		1	1	1	
3	282139	CYLINDER LOCK / CODE 60		1	1	1	
3	282140	CYLINDER LOCK / CODE 61		1	1	1	
3	282141	CYLINDER LOCK / CODE 62		1	1	1	
3	282142	CYLINDER LOCK / CODE 63		1	1	1	
3	282143	CYLINDER LOCK / CODE 64		1	1	1	
3	282144	CYLINDER LOCK / CODE 65		1	1	1	
3	282145	CYLINDER LOCK / CODE 66		1	1	1	

From Y-7046 To 8-9339		Date:07/2024	PAGE:Y2-1867-00

KEY & CYLINDER CODE "FORD" & "NS"

Item#	Part	Description	XLII 45	XLII MTH40	XLII MTH45	XLII MTH45E	NOTES
3	282146	CYLINDER LOCK / CODE 67		1	1	1	
3	282147	CYLINDER LOCK / CODE 68		1	1	1	
3	282148	CYLINDER LOCK / CODE 69		1	1	1	
3	282149	CYLINDER LOCK / CODE 70		1	1	1	
3	282150	CYLINDER LOCK / CODE 71		1	1	1	
3	282151	CYLINDER LOCK / CODE 72		1	1	1	
3	282152	CYLINDER LOCK / CODE 73		1	1	1	
3	282153	CYLINDER LOCK / CODE 74		1	1	1	
3	282154	CYLINDER LOCK / CODE 75		1	1	1	
3	282155	CYLINDER LOCK / CODE 76		1	1	1	
3	282156	CYLINDER LOCK / CODE 77		1	1	1	
3	282157	CYLINDER LOCK / CODE 78		1	1	1	
3	282158	CYLINDER LOCK / CODE 79		1	1	1	
3	282159	CYLINDER LOCK / CODE 80		1	1	1	
3	282160	CYLINDER LOCK / CODE 81		1	1	1	
3	282161	CYLINDER LOCK / CODE 82		1	1	1	
3	282162	CYLINDER LOCK / CODE 83		1	1	1	
3	282163	CYLINDER LOCK / CODE 84		1	1	1	
3	282164	CYLINDER LOCK / CODE 85		1	1	1	
3	282165	CYLINDER LOCK / CODE 86		1	1	1	
3	282166	CYLINDER LOCK / CODE 87		1	1	1	
3	282167	CYLINDER LOCK / CODE 88		1	1	1	
3	282168	CYLINDER LOCK / CODE 89		1	1	1	
3	282169	CYLINDER LOCK / CODE 90		1	1	1	
3	282170	CYLINDER LOCK / CODE 91		1	1	1	
3	282171	CYLINDER LOCK / CODE 92		1	1	1	
3	282172	CYLINDER LOCK / CODE 93		1	1	1	
3	282173	CYLINDER LOCK / CODE 94		1	1	1	
3	282174	CYLINDER LOCK / CODE 95		1	1	1	
3	282175	CYLINDER LOCK / CODE 96		1	1	1	
3	282176	CYLINDER LOCK / CODE 97		1	1	1	
3	282177	CYLINDER LOCK / CODE 98		1	1	1	
3	282178	CYLINDER LOCK / CODE 99		1	1	1	
3	780235	CYLINDER LOCK / CODE FA 0000	1				
3	780240	CYLINDER LOCK / CODE FA 0050	1				
3	780241	CYLINDER LOCK / CODE FA 0100	1				
3	780242	CYLINDER LOCK / CODE FA 0221	1				
3	780243	CYLINDER LOCK / CODE FA 0225	1				
3	780244	CYLINDER LOCK / CODE FA 0300	1				
3	780245	CYLINDER LOCK / CODE FA 0400	1				
3	780246	CYLINDER LOCK / CODE FA 0500	1				
3	780247	CYLINDER LOCK / CODE FA 0600	1				

From Y-7046 To 8-9339		Date:07/2024	PAGE:Y2-1867-00

KEY & CYLINDER CODE "FORD" & "NS"

Item#	Part	Description	XLII 45	XLII MTH40	XLII MTH45	XLII MTH45E	NOTES
3	780248	CYLINDER LOCK / CODE FA 0800	1				
3	282426	CYLINDER LOCK / CODE FA 1212	1				
3	780655	CYLINDER LOCK / CODE FA 0001	AR				
3	780603	CYLINDER LOCK / CODE FA 0013	AR				
3	780625	CYLINDER LOCK / CODE FA 0028	AR				
3	780650	CYLINDER LOCK / CODE FA 0055	AR				
3	780657	CYLINDER LOCK / CODE FA 0109	AR				
3	780626	CYLINDER LOCK / CODE FA 0113	AR				
3	780830	CYLINDER LOCK / CODE FA 0150	AR				
3	780542	CYLINDER LOCK / CODE FA 0169	AR				
3	780598	CYLINDER LOCK / CODE FA 0190	AR				
3	780529	CYLINDER LOCK / CODE FA 0199	AR				
3	780658	CYLINDER LOCK / CODE FA 0208	AR				
3	780596	CYLINDER LOCK / CODE FA 0221	AR				
3	780581	CYLINDER LOCK / CODE FA 0368	AR				
3	780609	CYLINDER LOCK / CODE FA 0506	AR				
3	780584	CYLINDER LOCK / CODE FA 0532	AR				
3	780621	CYLINDER LOCK / CODE FA 0528	AR				
3	780792	CYLINDER LOCK / CODE FA 0563	AR				
3	780555	CYLINDER LOCK / CODE FA 0692	AR				
3	780640	CYLINDER LOCK / CODE FA 0704	AR				
3	780590	CYLINDER LOCK / CODE FA 0721	AR				
3	780540	CYLINDER LOCK / CODE FA 1116	AR				
3	780600	CYLINDER LOCK / CODE FA 1252	AR				
3	780549	CYLINDER LOCK / CODE FA 1320	AR				
3	780643	CYLINDER LOCK / CODE FA 1343	AR				
3	780544	CYLINDER LOCK / CODE FA 1486	AR				
3	780547	CYLINDER LOCK / CODE FA 1549	AR				
4	780236	. RETAINER CLIP	1	1	1	1	
5	504477	. RING RETAINER / EXT 14.0 X 13.4 X 1.0MM	1	1	1	1	
6	281498	PIVOT LOCK 3/8" OFFSET To 4-8297	1	1	1	1	
6	287406	PIVOT LOCK 9.5MM OFFSET From 4-8298	1	1	1	1	
7	286553	PIVOT LOCK 18.7MM OFFSET	1				
8	284531	PIVOT LOCK ROD	1		1		
9	281498	PIVOT LOCK 3/8" OFFSET	AR	AR	AR	AR	
10	780180	LOCK CYLINDER W/KEY / "VIRO"	AR	AR	AR	AR	
. NS	780501	. KEY	1	1	1	1	
10	780806	LOCK CYLINDER W/KEY / "VIRO"	AR	AR	AR	AR	
. NS	780501	. KEY	1	1	1	1	
11	780501	. KEY	AR	AR	AR	AR	
12		. PIVOT LEVER INCLUDE WITH #780180	AR	AR	AR	AR	
12	289549	PIVOT LOCK ACTUATOR 42.4MM / W/11MM OFFSET	AR	AR	AR	AR	S

From Y-7046 To 8-9339		Date:07/2024	PAGE:Y2-1867-00

KEY & CYLINDER CODE "FORD" & "NS"

Item#	Part	Description	XLII 45	XLII MTH40	XLII MTH45	XLII MTH45E	NOTES
		NEXT CYLINDER LOCK ARE MODIFIED					
		WITH 2 THREADED HOLES SCREW 4-40					
		AND THEY USE ON "W.C.L." PASENGER'S SIDE DOOR					
		SEE PAGE X3-1862-80					
13	284561	CYLINDER LOCK MODIFIED / CODE A	1				
13	282286	CYLINDER LOCK / CODE B / FA 0050	1				
13	282287	CYLINDER LOCK / CODE C / FA 0100	1				
13	282288	CYLINDER LOCK / CODE D / FA 0221	1				
13	282289	CYLINDER LOCK / CODE E / FA 0225	1				
13	282290	CYLINDER LOCK / CODE F / FA 0300	1				
13	282291	CYLINDER LOCK / CODE G / FA 0400	1				
13	282292	CYLINDER LOCK / CODE H / FA 0500	1				
13	282293	CYLINDER LOCK / CODE I / FA 0600	1				
13	282294	CYLINDER LOCK / CODE J / FA 0800	1				
13	282426	CYLINDER LOCK / CODE FA 1212	1				
13	Call order desk	CYLINDER LOCK MODIFIED / CODE FA 0001	1				P
13	287379	CYLINDER LOCK / CODE BA / FA 0001	1				
13	286156	CYLINDER LOCK / CODE M / FA 0013	1				
13	Call order desk	CYLINDER LOCK MODIFIED / CODE FA 0020	1				P
13	287079	CYLINDER LOCK / CODE O / FA 0028	1				
13	287335	CYLINDER LOCK / CODE P / FA 0055	1				
13	Call order desk	CYLINDER LOCK MODIFIED / CODE FA 0107	1				P
13	287926	CYLINDER LOCK / CODE Q / FA 0107	1				
13	287460	CYLINDER LOCK / CODE R / FA 0109	1				
13	Call order desk	CYLINDER LOCK MODIFIED / CODE FA 0109	1				P
13	287100	CYLINDER LOCK / CODE S / FA 0113	1				
13	287736	CYLINDER LOCK / CODE AY / FA 0150	1				
13	285021	CYLINDER LOCK / CODE U / FA 0169	1				
13	285946	CYLINDER LOCK / CODE V / FA 0190	1				
13	284513	CYLINDER LOCK / CODE W / FA 0199	1				
13	Call order desk	CYLINDER LOCK MODIFIED / CODE FA 0206	1				P
13	288154	CYLINDER LOCK / CODE Y / FA 0208	1				
13	Call order desk	CYLINDER LOCK MODIFIED / CODE FA 0208	1				P
13	285496	CYLINDER LOCK / CODE Z / FA 0268	1				
13	Call order desk	CYLINDER LOCK MODIFIED / CODE FA 0268	1				P
13	285932	CYLINDER LOCK MODIFIED / CODE FA 0221	1				
13	285584	CYLINDER LOCK / CODE AA / FA 0368	1				
13	284841	CYLINDER LOCK MODIFIED / CODE FA 0368	1				
13	287633	CYLINDER LOCK MODIFIED / WITH 2 HOLES #4-40 / CODE L / FA 0329	1				
13	286459	CYLINDER LOCK / CODE AC / FA 0506	1				

From Y-7046 To 8-9339		Date:07/2024	PAGE:Y2-1867-00

KEY & CYLINDER CODE "FORD" & "NS"

Item#	Part	Description	XLII 45	XLII MTH40	XLII MTH45	XLII MTH45E	NOTES
13	285264	CYLINDER LOCK / CODE AB / FA 0443	1				
13	286983	CYLINDER LOCK / CODE AD / FA 0528	1				
13	285577	CYLINDER LOCK MODIFIED / CODE FA 0528	1				
13	285670	CYLINDER LOCK / CODE AE / FA 0532	1				
13	Call order desk	CYLINDER LOCK MODIFIED / CODE FA 0563	1				P
13	285545	CYLINDER LOCK / CODE AG / FA 0625	1				
13	284373	CYLINDER LOCK / CODE AH / FA 0648	1				
13	287920	CYLINDER LOCK / CODE AJ / FA 0692	1				
13	285276	CYLINDER LOCK / CODE AI / FA 0668	1				
13	287247	CYLINDER LOCK / CODE AK / FA 0704	1				
13	286418	CYLINDER LOCK / CODE AL / FA 0714	1				
13	285861	CYLINDER LOCK / CODE AM / FA 0721	1				
13	287654	CYLINDER LOCK MODIFIED / WITH 2 HOLES #4-40 / CODE AN / FA 0726	1				
13	287701	CYLINDER LOCK MODIFIED / WITH 2 HOLES #4-40 / CODE AX / FA 0899	1				
13	284935	CYLINDER LOCK / CODE AO / FA 1116	1				
13	286049	CYLINDER LOCK / CODE AP / FA 1252	1				
13	285572	CYLINDER LOCK / CODE AQ / FA 1316	1				
13	780549	CYLINDER LOCK / CODE FA 1320	1				
13	287250	CYLINDER LOCK / CODE AS / FA 1343	1				
13	287653	CYLINDER LOCK MODIFIED / WITH 2 HOLES #4-40 / CODE AW / FA 1465	1				
13	780547	CYLINDER LOCK / CODE FA 1549	1				
14	288839	PIVOT LOCK ROD / W/W.C.L. DOOR	1				
14	280128	PIVOT LOCK ROD / W/W.C.L. DOOR 54MM O.D.	1				
15	500518	SCREW MA BDG PH #4-40x1/2 Z050	2				
16	283853	SPACER / WASHER 9/16" O.D. X 1/4" I.D.	1				
17	285811	WASHER / CYLINDER LOCK RETAINER	1				
18	504402	RING RETAINER / EXT .250 x .210 x .025"	1				
19	287087	PIVOT	1				
20	780430	CYLINDER LOCK ASSY W/2 KEYS / "CORBIN"		1	1	1	SS
. NS	780562	. KEY / "CORBIN" BLANK		2	2	2	SS
20	780803	CYLINDER LOCK ASSY W/2 KEYS / "SCHLAGE" SERVICE		1	1	1	
. NS	780902	. KEY / "SCHLAGE" BLANK		1	1	1	
21	780562	KEY / "CORBIN" BLANK		AR	AR	AR	
30	780780	KEY, UNCUT / NS SERIE NS SERIES From 5-8522	AR				
30	780660	KEY / NS 8888 From 5-8522	AR				
30	780661	KEY / NS 8701 From 5-8522	AR				
30	780662	KEY / NS 8702 From 5-8522	AR				
30	780663	KEY / NS 8703 From 5-8522	AR				
30	780664	KEY / NS 8704 From 5-8522	AR				
30	780665	KEY / NS 8705 From 5-8522	AR				
30	780667	KEY / NS 8707 From 5-8522	AR				
30	780668	KEY / NS 8708 From 5-8522	AR				

From Y-7046 To 8-9339		Date:07/2024	PAGE:Y2-1867-00

KEY & CYLINDER CODE "FORD" & "NS"

Item#	Part	Description	XLII 45	XLII MTH40	XLII MTH45	XLII MTH45E	NOTES
30	780669	KEY / NS 8709 From 5-8522	AR				
30	780670	KEY / NS 8710 From 5-8522	AR				
30	780671	KEY / NS 8711 From 5-8522	AR				
30	780672	KEY / NS 8712 From 5-8522	AR				
30	780673	KEY / NS 8713 From 5-8522	AR				
30	780674	KEY / NS 8714 From 5-8522	AR				
30	780675	KEY / NS 8715 From 5-8522	AR				
30	780676	KEY / NS 8716 From 5-8522	AR				
30	780677	KEY / NS 8717 From 5-8522	AR				
30	780678	KEY / NS 8718 From 5-8522	AR				
30	780679	KEY / NS 8719 From 5-8522	AR				
30	780680	KEY / NS 8720 From 5-8522	AR				
30	780681	KEY / NS 8721 From 5-8522	AR				
30	780682	KEY / NS 8722 From 5-8522	AR				
30	780683	KEY / NS 8723 From 5-8522	AR				
30	780684	KEY / NS 8724 From 5-8522	AR				
30	780685	KEY / NS 8725 From 5-8522	AR				
30	780686	KEY / NS 8726 From 5-8522	AR				
30	780687	KEY / NS 8727 From 5-8522	AR				
30	780688	KEY / NS 8728 From 5-8522	AR				
30	780689	KEY / NS 8729 From 5-8522	AR				
30	780690	KEY / NS 8730 From 5-8522	AR				
30	780716	KEY / NS 8731 From 5-8522	AR				
30	780717	KEY / NS 8732 From 5-8522	AR				
30	780718	KEY / NS 8733 From 5-8522	AR				
30	780719	KEY / NS 8734 From 5-8522	AR				
30	780720	KEY / NS 8735 From 5-8522	AR				
30	780721	KEY / NS 8736 From 5-8522	AR				
30	780722	KEY / NS 8737 From 5-8522	AR				
30	780723	KEY / NS 8738 From 5-8522	AR				
30	780724	KEY / NS 8739 From 5-8522	AR				
30	780725	KEY / NS 8740 From 5-8522	AR				
31	780691	CYLINDER LOCK / NS 8888 From 5-8522	AR				
. NS	780660	. KEY / NS 8888 From 5-8522	1				
31	780692	CYLINDER LOCK / NS 8701 From 5-8522	AR				
. NS	780661	. KEY / NS 8701 From 5-8522	1				
31	780693	CYLINDER LOCK / NS 8702 From 5-8522	AR				
. NS	780662	. KEY / NS 8702 From 5-8522	1				
31	780694	CYLINDER LOCK / NS 8703 From 5-8522	AR				
. NS	780663	. KEY / NS 8703 From 5-8522	1				
31	780695	CYLINDER LOCK / NS 8704 From 5-8522	AR				
. NS	780664	. KEY / NS 8704 From 5-8522	1				

From Y-7046 To 8-9339		Date:07/2024	PAGE:Y2-1867-00

KEY & CYLINDER CODE "FORD" & "NS"

Item#	Part	Description	XLII 45	XLII MTH40	XLII MTH45	XLII MTH45E	NOTES
31	780696	CYLINDER LOCK / NS 8705 From 5-8522	AR				
. NS	780665	. KEY / NS 8705 From 5-8522	1				
31	780697	CYLINDER LOCK / NS 8707 From 5-8522	AR				
. NS	780667	. KEY / NS 8707 From 5-8522	1				
31	780698	CYLINDER LOCK / NS 8708 From 5-8522	AR				
. NS	780668	. KEY / NS 8708 From 5-8522	1				
31	780699	CYLINDER LOCK / NS 8709 From 5-8522	AR				
. NS	780669	. KEY / NS 8709 From 5-8522	1				
31	780700	CYLINDER LOCK / NS 8710 From 5-8522	AR				
. NS	780670	. KEY / NS 8710 From 5-8522	1				
31	780701	CYLINDER LOCK / NS 8711 From 5-8522	AR				
. NS	780671	. KEY / NS 8711 From 5-8522	1				
31	780702	CYLINDER LOCK / NS 8712 From 5-8522	AR				
. NS	780672	. KEY / NS 8712 From 5-8522	1				
31	780703	CYLINDER LOCK / NS 8713 From 5-8522	AR				
. NS	780673	. KEY / NS 8713 From 5-8522	1				
31	780704	CYLINDER LOCK / NS 8714 From 5-8522	AR				
. NS	780674	. KEY / NS 8714 From 5-8522	1				
31	780705	CYLINDER LOCK / NS 8715 From 5-8522	AR				
. NS	780675	. KEY / NS 8715 From 5-8522	1				
31	780706	CYLINDER LOCK / NS 8716 From 5-8522	AR				
. NS	780676	. KEY / NS 8716 From 5-8522	1				
31	780707	CYLINDER LOCK / NS 8717 From 5-8522	AR				
. NS	780677	. KEY / NS 8717 From 5-8522	1				
31	780708	CYLINDER LOCK / NS 8718 From 5-8522	AR				
. NS	780678	. KEY / NS 8718 From 5-8522	1				
31	780709	CYLINDER LOCK / NS 8719 From 5-8522	AR				
. NS	780679	. KEY / NS 8719 From 5-8522	1				
31	780710	CYLINDER LOCK / NS 8720 From 5-8522	AR				
. NS	780680	. KEY / NS 8720 From 5-8522	1				
31	780666	CYLINDER LOCK / NS 8721 From 5-8522	AR				
. NS	780681	. KEY / NS 8721 From 5-8522	1				
31	780726	CYLINDER LOCK / NS 8722 From 5-8522	AR				
. NS	780682	. KEY / NS 8722 From 5-8522	1				
31	780727	CYLINDER LOCK / NS 8723 From 5-8522	AR				
. NS	780683	. KEY / NS 8723 From 5-8522	1				
31	780728	CYLINDER LOCK / NS 8724 From 5-8522	AR				
. NS	780684	. KEY / NS 8724 From 5-8522	1				
31	780729	CYLINDER LOCK / NS 8725 From 5-8522	AR				
. NS	780685	. KEY / NS 8725 From 5-8522	1				
31	780730	CYLINDER LOCK / NS 8726 From 5-8522	AR				
. NS	780686	. KEY / NS 8726 From 5-8522	1				

From Y-7046 To 8-9339		Date:07/2024	PAGE:Y2-1867-00

KEY & CYLINDER CODE "FORD" & "NS"

Item#	Part	Description	XLII 45	XLII MTH40	XLII MTH45	XLII MTH45E	NOTES
31	780731	CYLINDER LOCK / NS 8727 From 5-8522	AR				
. NS	780687	. KEY / NS 8727 From 5-8522	1				
31	780732	CYLINDER LOCK / NS 8728 From 5-8522	AR				
. NS	780688	. KEY / NS 8728 From 5-8522	1				
31	780733	CYLINDER LOCK / NS 8729 From 5-8522	AR				
. NS	780689	. KEY / NS 8729 From 5-8522	1				
31	780734	CYLINDER LOCK / NS 8730 From 5-8522	AR				
. NS	780690	. KEY / NS 8730 From 5-8522	1				
31	780735	CYLINDER LOCK / NS 8731 From 5-8522	AR				
. NS	780716	. KEY / NS 8731 From 5-8522	1				
31	780736	CYLINDER LOCK / NS 8732 From 5-8522	AR				
. NS	780717	. KEY / NS 8732 From 5-8522	1				
31	780737	CYLINDER LOCK / NS 8733 From 5-8522	AR				
. NS	780718	. KEY / NS 8733 From 5-8522	1				
31	780738	CYLINDER LOCK / NS 8734 From 5-8522	AR				
. NS	780719	. KEY / NS 8734 From 5-8522	1				
31	780739	CYLINDER LOCK / NS 8735 From 5-8522	AR				
. NS	780720	. KEY / NS 8735 From 5-8522	1				
31	780740	CYLINDER LOCK / NS 8736 From 5-8522	AR				
. NS	780721	. KEY / NS 8736 From 5-8522	1				
31	780741	CYLINDER LOCK / NS 8737 From 5-8522	AR				
. NS	780722	. KEY / NS 8737 From 5-8522	1				
31	780742	CYLINDER LOCK / NS 8738 From 5-8522	AR				
. NS	780723	. KEY / NS 8738 From 5-8522	1				
31	780743	CYLINDER LOCK / NS 8739 From 5-8522	AR				
. NS	780724	. KEY / NS 8739 From 5-8522	1				
31	780744	CYLINDER LOCK / NS 8740 From 5-8522	AR				
. NS	780725	. KEY / NS 8740 From 5-8522	1				
32	780745	CYLINDER LOCK BODY From 5-8522	AR				
		S) REQUIERED ONLY IN SERVICE IF YOU NEED TO CHANGE YOUR OLD CYLINDER LOCK # 780180					
		SS) THIS MODEL IT OBSOLETED REPLACE BY 780803 WITH NEW LEVER # 289031					
		P) CALL ORDER DESK FOR SPECIFIC APPLICATION (V.I.N.)					

From Y-7046 To 3-8164		Date:07/2024	PAGE:Y2-1868-00
A/C COMPRESSOR DOOR ASSY			

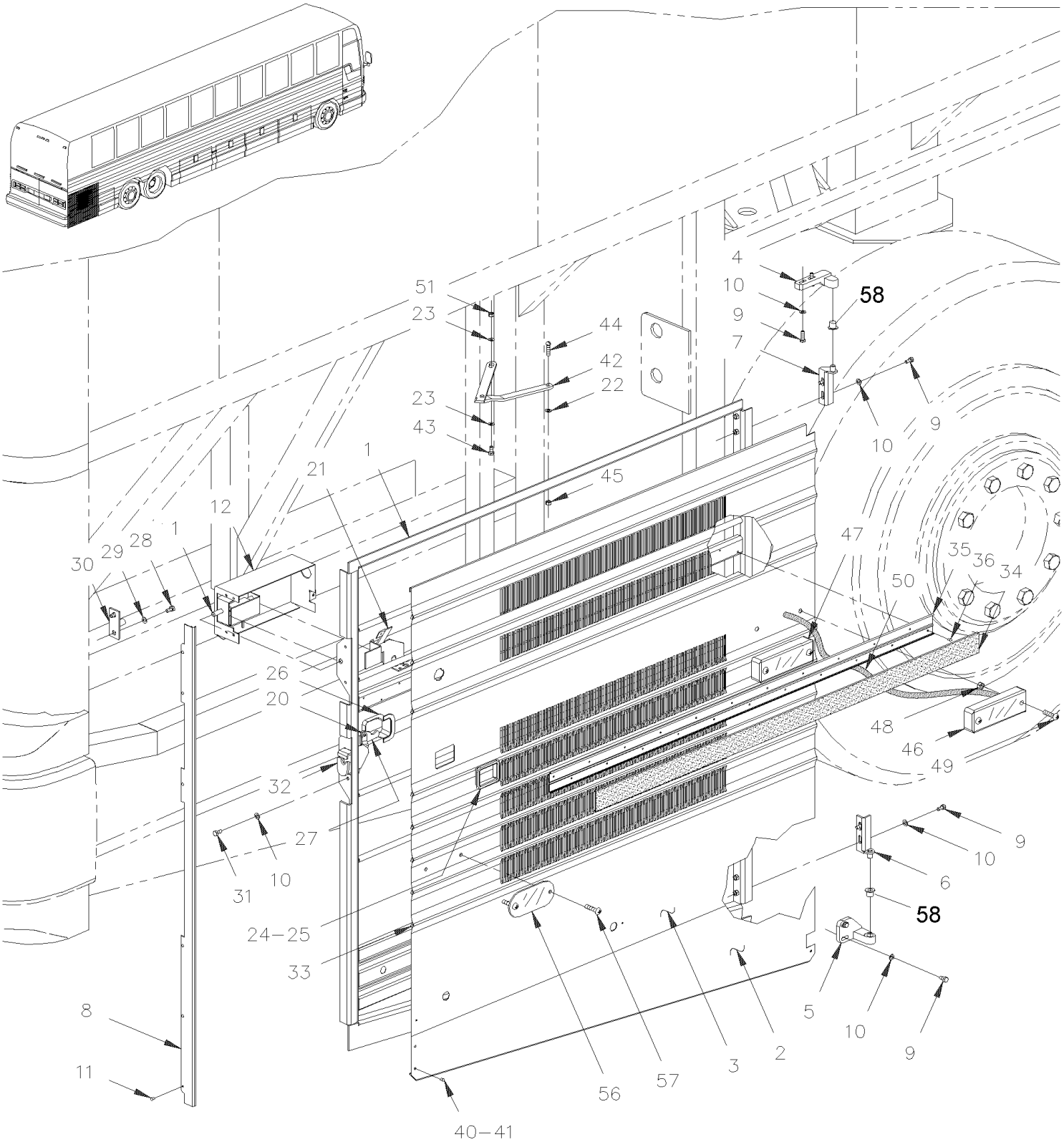

From Y-7046 To 3-8164		Date:07/2024	PAGE:Y2-1868-00

A/C COMPRESSOR DOOR ASSY

Item#	Part	Description	XLII 45	XLII MTH40	XLII MTH45	XLII MTH45E	NOTES
		ALL COMPRESSOR DOORS ASSY DO NOT INCLUDE					
		RUB-RAIL PLEASE ORDER SEPARATELY					
	286437P	COMPRESSOR DOOR ASSY / W/FLAT PANEL	1				
	286643P	COMPRESSOR DOOR ASSY / W/FLAT PANEL / AND ELECTRICAL LOCK	1				
	287349	COMPRESSOR DOOR ASSY / W/FLUTED LOWER MOULDING	1				A
	286433P	COMPRESSOR DOOR ASSY / W/FLUTED PANEL		1	1		
	286433P	COMPRESSOR DOOR ASSY / W/FLUTED PANEL To 1-7435				1	
	287933P	COMPRESSOR DOOR ASSY / W/FLUTED LOWER MOULDING From 1-7436				1	B
1	286083	FRAME ASSY / COMPRESSOR DOOR	1	1	1	1	
. NS	483749	. SUPPORT ACTUATOR / WELDED AT FRAME FORMER ACTUATOR 780428	1	1	1	1	
. NS	288989	. SUPPORT ACTUATOR / WELDED AT FRAME CURRENT ACTUATOR 780814	1	1	1	1	
2	474235	PANEL, LOWER To 1-7726	1				
2	475370	PANEL, LOWER From 1-7727	1				
2	473948	PANEL, LOWER / S.B.	AR				A
2	473948	PANEL, LOWER / S.B.		1	1	1	
3	474208	PANEL, UPPER / FLAT	1				
3	474862	PANEL, UPPER / W/FLUTED LOWER MOULDING	AR				A
3	473946	PANEL, UPPER / W/FLUTED		1	1		
3	473946	PANEL, UPPER / W/FLUTED To 1-7435				1	
3	474862	PANEL, UPPER / W/FLUTED LOWER MOULDING From 1-7436				1	A B
3	477490	PANEL, UPPER / W/FLUTED LOWER MOULDING / SERVICE	1			1	A B
4	286085	HINGE / UPPER	1	1	1	1	
5	286103	LOWER HINGE	1	1	1	1	
6	286102	ARM ASSY	1	1	1	1	
6	289150	ARM ASSY	1	1	1	1	
7	286098	ARM ASSY	1	1	1	1	
7	289149	ARM ASSY	1	1	1	1	
8	286225	FINISHING MOULDING 1110MM	1				
8	288527	FINISHING MOULDING 1110MM / B.A.		1	1	1	
9	502737	SCREW CAP HEX M6-1.0x25 SS BK	4	4	4	4	
10	430406	WASHER FLAT	4	4	4	4	
11	504339	RIVET POP DOME OE 1/8x3/8 SS	6	6	6	6	
12	286223	CAP	1	1	1	1	
13	502577	SCREW MA PAN PH M3-0.5x16 ZP	2	2	2	2	
14	502579	NUT HEX M3-0.5 NP	2	2	2	2	
15	562096	MICRO SWITCH	1	1	1	1	
16	504477	RING RETAINER / EXT 14.0 X 13.4 X 1.0MM	1	1	1	1	
17	281498	PIVOT LOCK 3/8" OFFSET	1	1	1	1	
18	481564	ROD GUIDE	2	2	2	2	
19	502151	SPRING COMPRESSION / .300 O.D. x 1 x .032	2	2	2	2	

From Y-7046 To 3-8164		Date:07/2024	PAGE:Y2-1868-00

A/C COMPRESSOR DOOR ASSY

Item#	Part	Description	XLII 45	XLII MTH40	XLII MTH45	XLII MTH45E	NOTES
20	504379	RIVET POP DOME OE 3/16x1/4 SS	4	4	4	4	
21	780428	LOCK ACTUATOR / 12V	1	1	1	1	
. NS	562076	. CONNECTOR / PACK-CON I / FEMALE HOUSING / 2C / PED 8911772	1	1	1	1	
21	**2810382**	**ACTUATOR SERVICE KIT**	1	1	1	1	
22	502573	WASHER FL 6.4x12.5x1.6 SS	1	1	1	1	
23	500270	WASHER FL .406x1.000x.063 SS	2	2	2	2	
24	286171	PROTECTOR	1	1	1	1	
25	683083	ADHESIVE SIKA #252 / BLACK / 600 ml SAUSAGE	AR	AR	AR	AR	
26	286280	PROTECTOR	1	1	1	1	
27	284749	LEVER	1	1	1	1	
28	502780	SCREW CAP HEX M8-1.25x25 SS BK	2	2	2	2	
29	502584	WASHER LO SERR 8.2x26.3x1.8 Z050	2	2	2	2	
30	286203	STOPPER	1	1	1	1	
31	502563	SCREW CAP HEX M6-1.0x12 G8.8 Z050	2	2	2	2	
32	780587	LOCK SPAGNOLET L.H. / W/G-FITTING To 2-7755	1	1	1	1	
. NS	507607	. GREASE FITTING / M6-1.00 To 2-7755	1	1	1	1	
32	780652	LOCK SPAGNOLET L.H. / W/G-FITTING From 2-7756	1	1	1	1	
. NS	780340	. CLIP, RETAINER ROD From 2-7756	1	1	1	1	
. NS	507607	. GREASE FITTING / M6-1.00 From 2-7756	1	1	1	1	
33	682972	BLACK TAPE BUTYL 3/16"X3/8"X25'	AR	AR	AR	AR	
34	473830	FINISHING MOULDING SS / 1123MM		1	1	1	
34	474389	FINISHING MOULDING PLASTIC 1123MM	1			1	B
. NS	506769	. TAPE RUB ADH2 CC POL 1/8" x 1/4" x 60' / BLACK H1CC-N-#14	AR			AR	B
35	473826	MOULDING RETAINER / 1125MM		1	1	1	
36	504488	RIVET MGLP PRDG 3/16x17/64 SS		10	10	10	
37	064894	CABLE ASSY / COMPRESSOR DOOR LOCK	1	1	1	1	
38	502637	WASHER FL .200x.437x.037 SS	4	4	4	4	
39	504013	TIE MOUNT / 1/4" X 1/4" I.D.	4	4	4	4	
40	504334	BUMPER RUBBER / .625 OD x .406 TH x .156 HOLE	2	2	2	2	
41	504339	RIVET POP DOME OE 1/8x3/8 SS	2	2	2	2	
NS	504272	RIVET CHY Q BRAZ 3/16x1/8 SS	6	6	6	6	
42	281445	GUIDE ASSY / R.H. DOOR To 2-7831	1	1	1	1	
42	288031	GUIDE ASSY / R.H. DOOR From 2-7832	1	1	1	1	
43	502780	SCREW CAP HEX M8-1.25x25 SS BK	1	1	1	1	
44	502568	SCREW MA PAN PH M6-1.0x20 EMN	1	1	1	1	
45	502511	NUT HEX NYRT M6-1.0 Z050	1	1	1	1	
46	**Y2-0662-00**	**CLEARANCE & MARKER LIGHT**					
47	**Y2-0662-00**	**CLEARANCE & MARKER LIGHT**					
48	502774	NUT WELL #10-32x.625	4	4	4	4	
49	5001042	SCREW MA RND PH #10-32x1 1/4 SS	4	4	4	4	
50	064990	CABLE ASSY / SIDE MARKER LAMP FOR DOORS	2	2	2	2	
. NS	473832	. GROMMET 2 HOLESx1.6x11.0MMx2.0MMx8.0MMx16MM	1	1	1	1	

From Y-7046 To 3-8164		Date:07/2024	PAGE:Y2-1868-00

A/C COMPRESSOR DOOR ASSY

Item#	Part	Description	XLII 45	XLII MTH40	XLII MTH45	XLII MTH45E	NOTES
50	067207	CABLE ASSY / SIDE MARKER LAMP FOR DOORS	2	2	2	2	
. NS	473832	. GROMMET 2 HOLESx1.6x11.0MMx2.0MMx8.0MMx16MM	1	1	1	1	
51	5001188	NUT HEX M8-1.25 SS	1	1	1	1	
52	683448	ACCELERATOR SIKA / 600ml SAUSAGE	AR	AR	AR	AR	
53	683447	ADHESIVE SIKATACK PLUS / BLACK / 23 Liters	AR	AR	AR	AR	
54	683097	CLEANER SIKA #205 / CLEAR / 1000ml	AR	AR	AR	AR	
55	683446	PRIMER SIKA #206 / BLACK / 1000ml	AR	AR	AR	AR	
56	930320	REFLECTOR RED 1 3/16" x 4 7/16"	1	1	1	1	
57	500606	SCREW MA TR PH #10-24x3/4 SS	2	2	2	2	
58	284607	BUSHING, NYLON / (NOT INCLUDE W/HINGE)	2	2	2	2	
59	504637	CABLE TIE / 3/16" x 13"	4	4	4	4	
60	500786	NUT HEX #10-24 Z050	2	2	2	2	
65	5001030	WASHER LO EXTC 5.3x9.8x0.3 BK	4	4	4	4	
66	502698	SCREW MA PAN PH M4-0.7x16 SS BK	4	4	4	4	
67	500470	WASHER LO SPT .193x.334x.047 Z050	2	2	2	2	
		A) BUS WITH "OPTION" FLUTED LOWER PANELLING					
		B) MTH ENT WITH UPPER FLAT SIDE PANELLING					

From 4-8165 To 8-9339		Date:07/2024	PAGE:Y2-1868-01
A/C COMPRESSOR DOOR ASSY			

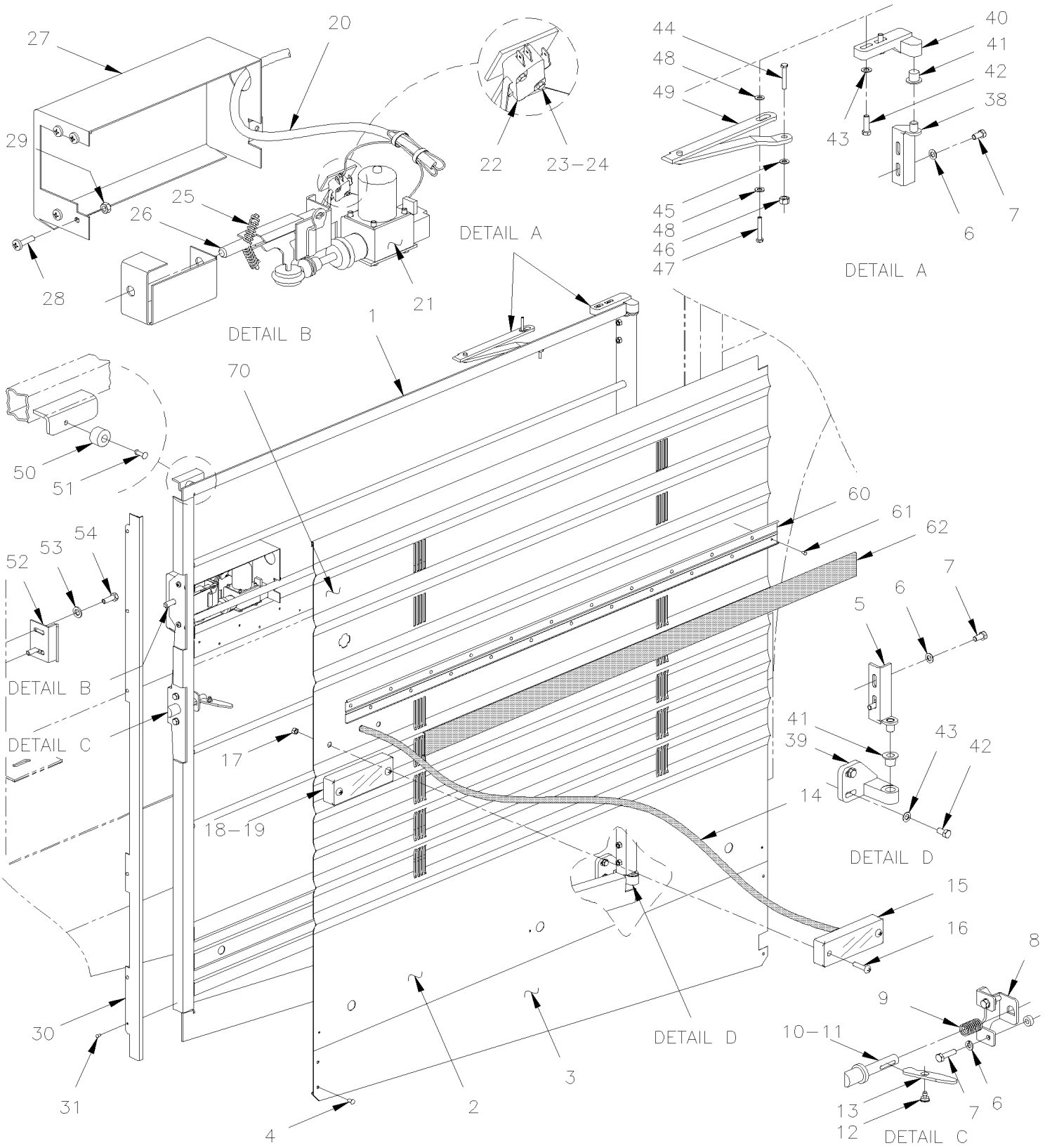

From 4-8165 To 8-9339		Date:07/2024	PAGE:Y2-1868-01

A/C COMPRESSOR DOOR ASSY

Item#	Part	Description	XLII 45	XLII MTH40	XLII MTH45	XLII MTH45E	NOTES
	288334	COMPRESSOR DOOR ASSY / W/FLAT PANEL To 6-8906	1				
	288335	COMPRESSOR DOOR ASSY / W/FLAT PANEL / AND ELECTRICAL LOCK To 6-8906	1				
	288336	COMPRESSOR DOOR ASSY / W/FLUTED PANEL To 6-8906	1				A
	288337	COMPRESSOR DOOR ASSY / W/FLUTED PANEL / AND ELECTRICAL LOCK To 6-8906	1				A
	288338	COMPRESSOR DOOR ASSY / W/FLUTED PANEL		1	1		
	288339	COMPRESSOR DOOR ASSY / W/FLUTED LOWER MOULDING				1	
1	286230	. FRAME ASSY / COMPRESSOR DOOR To 7-8932	1	1	1	1	
1	286474	. FRAME ASSY / COMPRESSOR DOOR From 7-8933		1	1	1	
. NS	483749	. . SUPPORT ACTUATOR / WELDED AT FRAME FORMER ACTUATOR 780428 From 7-8933		1	1	1	
. NS	288989	. . SUPPORT ACTUATOR / WELDED AT FRAME CURRENT ACTUATOR 780814 From 7-8933		1	1	1	
2	473651	. PANEL, UPPER / FLAT To 4-8358	1				
2	477484	. PANEL, UPPER / FLAT From 4-8359 To 6-8906	1				
2	475696	. PANEL, UPPER / W/FLUTED / S.B. To 4-8358		1	1		
2	477492	. PANEL, UPPER / W/FLUTED / S.B. From 4-8359 To 5-8468		1	1		
2	477665	. PANEL, UPPER / W/FLUTED / B.A. From 5-8469		1	1		
2	473734	. PANEL, UPPER / W/FLUTED / S.B. To 4-8358				1	
2	473734	. PANEL, UPPER / W/FLUTED / S.B. To 4-8358	1				A
2	477485	. PANEL, UPPER / W/FLUTED / S.B. From 4-8359 To 5-8468				1	
2	477485	. PANEL, UPPER / W/FLUTED / S.B. From 4-8359 To 6-8906	1				A
2	477680	. PANEL, UPPER / W/FLUTED / B.A. From 5-8469				1	
3	475370	. PANEL, LOWER To 6-8906	1				
3	473948	. PANEL, LOWER / S.B. To 5-8468				1	A
3	473948	. PANEL, LOWER / S.B. To 6-8906	1				A
3	477664	. PANEL, LOWER / B.A. From 5-8469		1	1	1	
4	504272	. RIVET CHY Q BRAZ 3/16x1/8 SS	5	5	5	5	
5	286102	. ARM ASSY	1	1	1	1	
5	289150	. ARM ASSY	1	1	1	1	
6	500356	. WASHER LO SERR 6.1x16.0x0.9 N500	4	4	4	4	
7	502737	. SCREW CAP HEX M6-1.0x25 SS BK	4	4	4	4	
8	288006	. GUIDE PIN HOLDER	1	1	1	1	
9	502910	. SPRING COMPRESSION / .720 O.D. 1.75 x .055	1	1	1	1	
10	284313	. CATCH PIN SS / 90MM	1	1	1	1	
10	289585	. CATCH PIN ACETAL / 90MM	1	1	1	1	
11	507212	. O-RING	1	1	1	1	
12	287271	. RIVET SHR FL 9.95x3.6{4.8x4.8 SS	1	1	1	1	
13	286612	. PIVOT	1	1	1	1	
14	064990	. CABLE ASSY / SIDE MARKER LAMP FOR DOORS	2	2	2	2	
. NS	473832	. . GROMMET 2 HOLESx1.6x11.0MMx2.0MMx8.0MMx16MM	1	1	1	1	
14	067207	. CABLE ASSY / SIDE MARKER LAMP FOR DOORS	2	2	2	2	
. NS	473832	. . GROMMET 2 HOLESx1.6x11.0MMx2.0MMx8.0MMx16MM	1	1	1	1	
NS	504273	. CABLE TIE / 1/8" X 3"1/2	2	2	2	2	
15	**Y2-0662-00**	**CLEARANCE & MARKER LIGHT**					

From 4-8165 To 8-9339		Date:07/2024	PAGE:Y2-1868-01

A/C COMPRESSOR DOOR ASSY

Item#	Part	Description	XLII 45	XLII MTH40	XLII MTH45	XLII MTH45E	NOTES
16	5001042	. SCREW MA RND PH #10-32x1 1/4 SS	4	4	4	4	
17	502774	. NUT WELL #10-32x.625	4	4	4	4	
18	930320	. REFLECTOR RED 1 3/16" x 4 7/16"	1	1	1	1	
19	500510	. SCREW MA BDG PH #10-32x3/4 SS EMN	2	2	2	2	
19	500423	. NUT HEX NYRT #10-32 SS	2	2	2	2	
19	500787	. NUT HEX #10-24 SS	2	2	2	2	
20	064894	. CABLE ASSY / COMPRESSOR DOOR LOCK To 7-9095	1	1	1	1	
20	067119	. CABLE ASSY / COMPRESSOR DOOR LOCK From 7-9096	1	1	1	1	
21	780428	. LOCK ACTUATOR / 12V	1	1	1	1	
. NS	562076	. . CONNECTOR / PACK-CON I / FEMALE HOUSING / 2C / PED 8911772	1	1	1	1	
21	**2810382**	**. ACTUATOR SERVICE KIT**	1	1	1	1	
22	562096	. MICRO SWITCH	1	1	1	1	
23	502577	. SCREW MA PAN PH M3-0.5x16 ZP	2	2	2	2	
24	502579	. NUT HEX M3-0.5 NP	2	2	2	2	
NS	502691	. WASHER LO SPT 3.6x6.7x0.8 Z050	2	2	2	2	
25	502151	. SPRING COMPRESSION / .300 O.D. x 1 x .032	2	2	2	2	
26	481564	. ROD GUIDE	1	1	1	1	
27	287400	. COVER / ACTUATOR PROTECTOR	1	1	1	1	
28	502698	. SCREW MA PAN PH M4-0.7x16 SS BK	2	2	2	2	
29	5001544	. WASHER LO EXT .195x.410x.025 SS	2	2	2	2	
30	286225	. FINISHING MOULDING 1110MM To 6-8906	1				
30	288527	. FINISHING MOULDING 1110MM / B.A.		1	1	1	
31	504339	. RIVET POP DOME OE 1/8x3/8 SS	4	4	4	4	
38	286098	. ARM ASSY	1	1	1	1	
38	289149	. ARM ASSY	1	1	1	1	
39	286103	LOWER HINGE	1	1	1	1	
40	286085	HINGE / UPPER	1	1	1	1	
41	284607	BUSHING, NYLON / (NOT INCLUDE W/HINGE)	1	1	1	1	
42	502737	SCREW CAP HEX M6-1.0x25 SS BK	4	4	4	4	
43	430406	WASHER FLAT	8	8	8	8	
44	502568	SCREW MA PAN PH M6-1.0x20 EMN	1	1	1	1	
45	502573	WASHER FL 6.4x12.5x1.6 SS	1	1	1	1	
46	502511	NUT HEX NYRT M6-1.0 Z050	1	1	1	1	
47	502686	SCREW CAP HEX M6-1.0x30 SS BK	1	1	1	1	
48	5001448	WASHER FL .343x.875x.062 SS18-8	2	2	2	2	
49	288031	GUIDE ASSY / R.H. DOOR	1	1	1	1	
50	504334	BUMPER RUBBER / .625 OD x .406 TH x .156 HOLE	1	1	1	1	
51	504339	RIVET POP DOME OE 1/8x3/8 SS	1	1	1	1	
52	287286	CATCH PIN / RETAINER 45MMx21MM 90°	1	1	1	1	
NS	287452	SHIM SPACER 70MM X 25 X 14GA	AR	AR	AR	AR	
53	502857	WASHER LO SERR 8.2x26.3x1.8 N500	4	4	4	4	
54	502780	SCREW CAP HEX M8-1.25x25 SS BK	4	4	4	4	

From 4-8165 To 8-9339		Date:07/2024	PAGE:Y2-1868-01

A/C COMPRESSOR DOOR ASSY

Item#	Part	Description	XLII 45	XLII MTH40	XLII MTH45	XLII MTH45E	NOTES
60	473826	MOULDING RETAINER / 1125MM		1	1		
61	504488	RIVET MGLP PRDG 3/16x17/64 SS		10	10		
62	473830	FINISHING MOULDING SS / 1123MM		1	1		
62	474389	FINISHING MOULDING PLASTIC 1123MM	1			1	
. NS	506769	. TAPE RUB ADH2 CC POL 1/8" x 1/4" x 60' / BLACK H1CC-N-#14	AR			AR	
70	**Y2-1867-00**	**KEY & CYLINDER CODE "FORD" & "NS"**					
		A) BUS WITH "OPTION" FLUTED LOWER PANELLING					
		Z) NO ENGLISH DESCRIPTION					

From Y-7046 To 3-8164		Date:07/2024	PAGE:Y2-1869-00
RADIATOR DOOR ASSY			

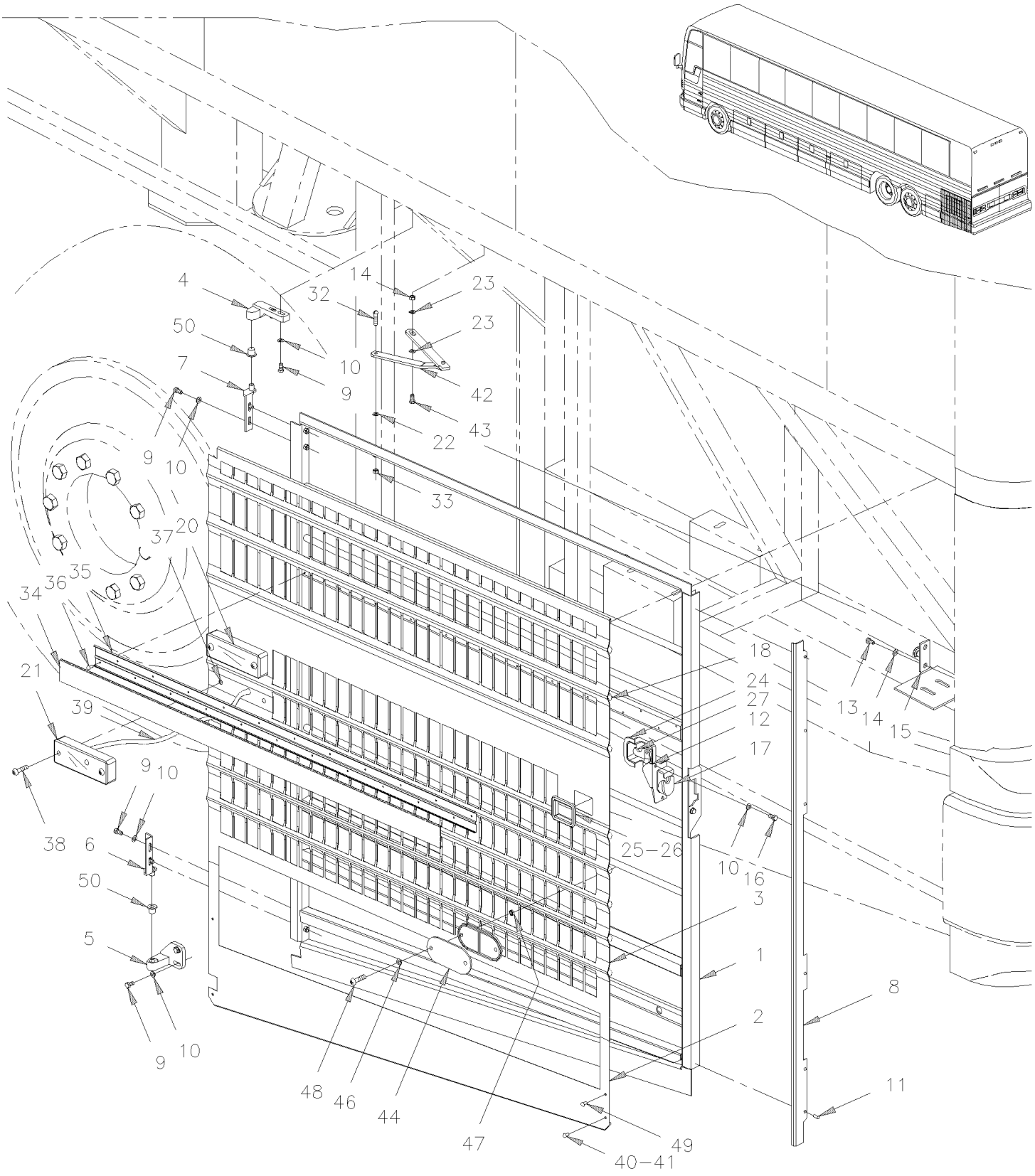

From Y-7046 To 3-8164		Date:07/2024	PAGE:Y2-1869-00

RADIATOR DOOR ASSY

Item#	Part	Description	XLII 45	XLII MTH40	XLII MTH45	XLII MTH45E	NOTES
		ALL RADIATOR DOORS ASSY DO NOT INCLUDE					
		RUB-RAIL PLEASE ORDER SEPARATELY					
	286645P	RADIATOR DOOR ASSY / W/FLAT PANEL	1				
	287936P	RADIATOR DOOR ASSY / W/FLUTED LOWER MOULDING	1				A
	286453P	RADIATOR DOOR ASSY / W/FLUTED PANEL		1	1		
	286453P	RADIATOR DOOR ASSY / W/FLUTED PANEL To 1-7435				1	
	287936P	RADIATOR DOOR ASSY / W/FLUTED LOWER MOULDING From 1-7436				1	
1	286134	FRAME ASSY / RADIATOR DOOR	1	1	1	1	
2	474236	PANEL, LOWER To 1-7726	1				
2	475360	PANEL, LOWER From 1-7727	1				
2	473947	PANEL, LOWER / SB	AR				A
2	473947	PANEL, LOWER / SB		1	1	1	
3	474228	PANEL, UPPER / FLAT	1				
3	474856	PANEL, UPPER / W/FLUTED LOWER MOULDING	AR				A
3	473949	PANEL, UPPER / W/FLUTED		1	1		
3	473949	PANEL, UPPER / W/FLUTED To 1-7435				1	
3	474856	PANEL, UPPER / W/FLUTED LOWER MOULDING From 1-7436				1	B
4	286129	HINGE / UPPER	1	1	1	1	
5	286128	LOWER HINGE	1	1	1	1	
6	286098	ARM ASSY	1	1	1	1	
6	289149	ARM ASSY	1	1	1	1	
7	286102	ARM ASSY	1	1	1	1	
7	289150	ARM ASSY	1	1	1	1	
8	286225	FINISHING MOULDING 1110MM	1				
8	288527	FINISHING MOULDING 1110MM / B.A.		1	1	1	
9	502737	SCREW CAP HEX M6-1.0x25 SS BK	4	4	4	4	
10	430406	WASHER FLAT	4	4	4	4	
11	504339	RIVET POP DOME OE 1/8x3/8 SS	6	6	6	6	
12	504379	RIVET POP DOME OE 3/16x1/4 SS	1	1	1	1	
13	502780	SCREW CAP HEX M8-1.25x25 SS BK	2	2	2	2	
14	502584	WASHER LO SERR 8.2x26.3x1.8 Z050	2	2	2	2	
15	286203	STOPPER	1	1	1	1	
16	502563	SCREW CAP HEX M6-1.0x12 G8.8 Z050	2	2	2	2	
17	780588	LOCK SPAGNOLET R.H. / W/G-FITTING To 2-7755	1	1	1	1	
. NS	780340	. CLIP, RETAINER ROD To 2-7755	1	1	1	1	
. NS	507607	. GREASE FITTING / M6-1.00 To 2-7755	1	1	1	1	
17	780653	LOCK SPAGNOLET R.H. / W/G-FITTING From 2-7756	1	1	1	1	
. NS	780340	. CLIP, RETAINER ROD From 2-7756	1	1	1	1	
. NS	507607	. GREASE FITTING / M6-1.00 From 2-7756	1	1	1	1	
18	682972	BLACK TAPE BUTYL 3/16"X3/8"X25'	AR	AR	AR	AR	

From Y-7046 To 3-8164		Date:07/2024	PAGE:Y2-1869-00

RADIATOR DOOR ASSY

Item#	Part	Description	XLII 45	XLII MTH40	XLII MTH45	XLII MTH45E	NOTES
19	5001188	NUT HEX M8-1.25 SS	1	1	1	1	
20	**Y2-0662-00**	**CLEARANCE & MARKER LIGHT**					
21	**Y2-0662-00**	**CLEARANCE & MARKER LIGHT**					
22	502573	WASHER FL 6.4x12.5x1.6 SS	1	1	1	1	
23	500270	WASHER FL .406x1.000x.063 SS	2	2	2	2	
24	286280	PROTECTOR	1	1	1	1	
25	683083	ADHESIVE SIKA #252 / BLACK / 600 ml SAUSAGE	AR	AR	AR	AR	
26	286171	PROTECTOR	1	1	1	1	
27	284749	LEVER	1	1	1	1	
28	683448	ACCELERATOR SIKA / 600ml SAUSAGE	AR	AR	AR	AR	
29	683447	ADHESIVE SIKATACK PLUS / BLACK / 23 Liters	AR	AR	AR	AR	
30	683097	CLEANER SIKA #205 / CLEAR / 1000ml	AR	AR	AR	AR	
31	683446	PRIMER SIKA #206 / BLACK / 1000ml	AR	AR	AR	AR	
32	502568	SCREW MA PAN PH M6-1.0x20 EMN	1	1	1	1	
33	502511	NUT HEX NYRT M6-1.0 Z050	1	1	1	1	
34	473830	FINISHING MOULDING SS / 1123MM		1	1	1	
34	474389	FINISHING MOULDING PLASTIC 1123MM	1			1	B
. NS	506769	. TAPE RUB ADH2 CC POL 1/8" x 1/4" x 60' / BLACK H1CC-N-#14	AR			AR	B
35	473826	MOULDING RETAINER / 1125MM		1	1	1	
36	504488	RIVET MGLP PRDG 3/16x17/64 SS		10	10	10	
37	502774	NUT WELL #10-32x.625	4	4	4	4	
38	5001042	SCREW MA RND PH #10-32x1 1/4 SS	4	4	4	4	
39	064990	CABLE ASSY / SIDE MARKER LAMP FOR DOORS	2	2	2	2	
. NS	473832	. GROMMET 2 HOLESx1.6x11.0MMx2.0MMx8.0MMx16MM	1	1	1	1	
40	504334	BUMPER RUBBER / .625 OD x .406 TH x .156 HOLE	2	2	2	2	
41	504339	RIVET POP DOME OE 1/8x3/8 SS	2	2	2	2	
42	281444	GUIDE ASSY / L.H. DOOR To 2-7831	1	1	1	1	
42	281912	GUIDE ASSY / L.H. DOOR From 2-7832	1	1	1	1	
43	502780	SCREW CAP HEX M8-1.25x25 SS BK	1	1	1	1	
44	930320	REFLECTOR RED 1 3/16" x 4 7/16"	1	1	1	1	
46	500470	WASHER LO SPT .193x.334x.047 Z050	2	2	2	2	
47	500786	NUT HEX #10-24 Z050	2	2	2	2	
48	500606	SCREW MA TR PH #10-24x3/4 SS	2	2	2	2	
49	504272	RIVET CHY Q BRAZ 3/16x1/8 SS	4	4	4	4	
50	284607	BUSHING, NYLON / (NOT INCLUDE W/HINGE)	2	2	2	2	
		A) BUS WITH "OPTION" FLUTED LOWER PANELLING					
		B) MTH ENT WITH UPPER FLAT SIDE PANELLING					

From 4-8165 To 6-8906		Date:07/2024	PAGE:Y2-1869-01
RADIATOR DOOR ASSY - BUS			

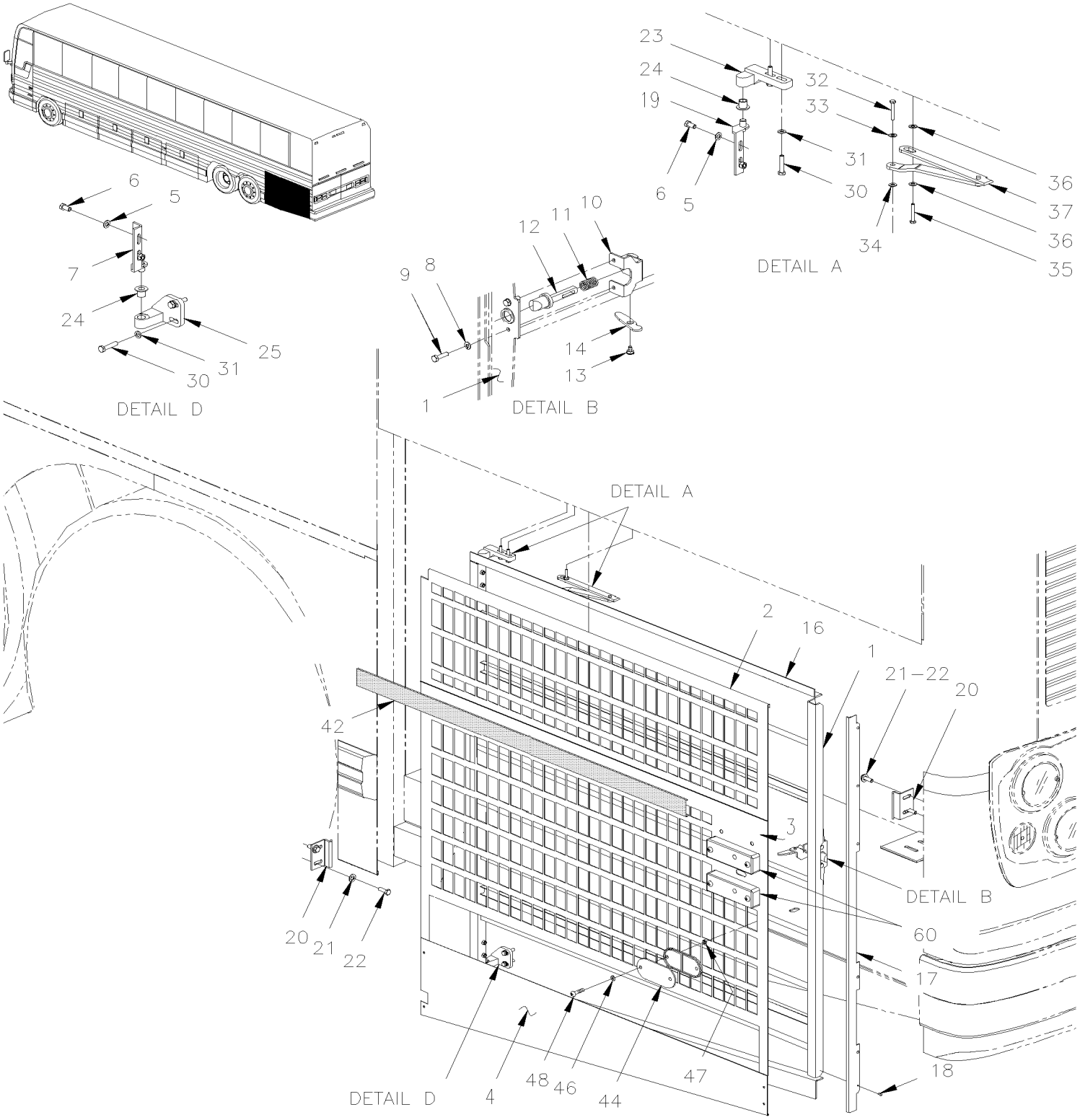

From 4-8165 To 6-8906		Date:07/2024	PAGE:Y2-1869-01

RADIATOR DOOR ASSY - BUS

Item#	Part	Description	XLII 45	XLII MTH40	XLII MTH45	XLII MTH45E	NOTES
	288332	RADIATOR DOOR ASSY / W/FLAT PANEL	1				
	288333	RADIATOR DOOR ASSY / W/FLUTED LOWER MOULDING	1				A
1	284778	FRAME ASSY / RADIATOR DOOR	1				
2	473796	PANEL, UPPER / FLAT To 4-8358	1				
2	477488	PANEL, UPPER / FLAT From 4-8359	1				
2	473794	PANEL, UPPER / W/FLAT UPPER MOULDING / S.B. To 4-8358	AR				A
2	477487	PANEL, UPPER / W/FLAT UPPER MOULDING / S.B. From 4-8359	AR				A
4	475360	PANEL, LOWER	1				
4	474457	PANEL, LOWER / S.B.	AR				A
4	504272	RIVET CHY Q BRAZ 3/16x1/8 SS	4				
5	502737	SCREW CAP HEX M6-1.0x25 SS BK	4				
NS	430406	WASHER FLAT	4				
6	502686	SCREW CAP HEX M6-1.0x30 SS BK	4				
7	286098	ARM ASSY	1				
7	289149	ARM ASSY	1				
8	500356	WASHER LO SERR 6.1x16.0x0.9 N500	6				
9	502737	SCREW CAP HEX M6-1.0x25 SS BK	6				
10	288006	GUIDE PIN HOLDER	1				
11	502910	SPRING COMPRESSION / .720 O.D. 1.75 x .055	1				
12	284313	CATCH PIN SS / 90MM	1				
12	289585	CATCH PIN ACETAL / 90MM	1				
NS	507212	O-RING	1				
13	287271	RIVET SHR FL 9.95x3.6{4.8x4.8 SS	1				
14	286612	PIVOT	1				
16	504334	BUMPER RUBBER / .625 OD x .406 TH x .156 HOLE	1				
16	504339	RIVET POP DOME OE 1/8x3/8 SS	1				
17	286225	FINISHING MOULDING 1110MM	1				
18	504339	RIVET POP DOME OE 1/8x3/8 SS	AR				
19	286102	ARM ASSY	1				
19	289150	ARM ASSY	1				
20	287286	CATCH PIN / RETAINER 45MMx21MM 90°	1				
NS	287452	SHIM SPACER 70MM X 25 X 14GA	AR				
21	502857	WASHER LO SERR 8.2x26.3x1.8 N500	4				
22	502780	SCREW CAP HEX M8-1.25x25 SS BK	4				
23	286129	HINGE / UPPER	1				
24	284607	BUSHING, NYLON / (NOT INCLUDE W/HINGE)	2				
25	286128	LOWER HINGE	1				
30	502737	SCREW CAP HEX M6-1.0x25 SS BK	4				
31	430406	WASHER FLAT	4				
32	502568	SCREW MA PAN PH M6-1.0x20 EMN	1				
33	502573	WASHER FL 6.4x12.5x1.6 SS	1				
34	502511	NUT HEX NYRT M6-1.0 Z050	1				

From 4-8165 To 6-8906		Date:07/2024	PAGE:Y2-1869-01

RADIATOR DOOR ASSY - BUS

Item#	Part	Description	XLII 45	XLII MTH40	XLII MTH45	XLII MTH45E	NOTES
35	502780	SCREW CAP HEX M8-1.25x25 SS BK	1				
36	500270	WASHER FL .406x1.000x.063 SS	2				
37	281912	GUIDE ASSY / L.H. DOOR	1				
42	474389	FINISHING MOULDING PLASTIC 1123MM	1				
. NS	506769	. TAPE RUB ADH2 CC POL 1/8" x 1/4" x 60' / BLACK H1CC-N-#14	AR				
NS	683083	ADHESIVE SIKA #252 / BLACK / 600 ml SAUSAGE	AR				
NS	5060044	TAPE RUB ADH2 CC POL 1/4" X 1/4" X 50' / BLACK I1C-N-A	AR				
44	930320	REFLECTOR RED 1 3/16" x 4 7/16"	1				
46	500914	WASHER LO SPT .193x.334x.047 N500	2				
47	500787	NUT HEX #10-24 SS	2				
48	500606	SCREW MA TR PH #10-24x3/4 SS	2				
60	**Y2-0662-00**	**CLEARANCE & MARKER LIGHT**					
		A) BUS WITH "OPTION" FLUTED LOWER PANELLING					

From 4-8165 To 8-9339		Date:07/2024	PAGE:Y2-1869-50
RADIATOR DOOR ASSY - MTH-45' SMALL			

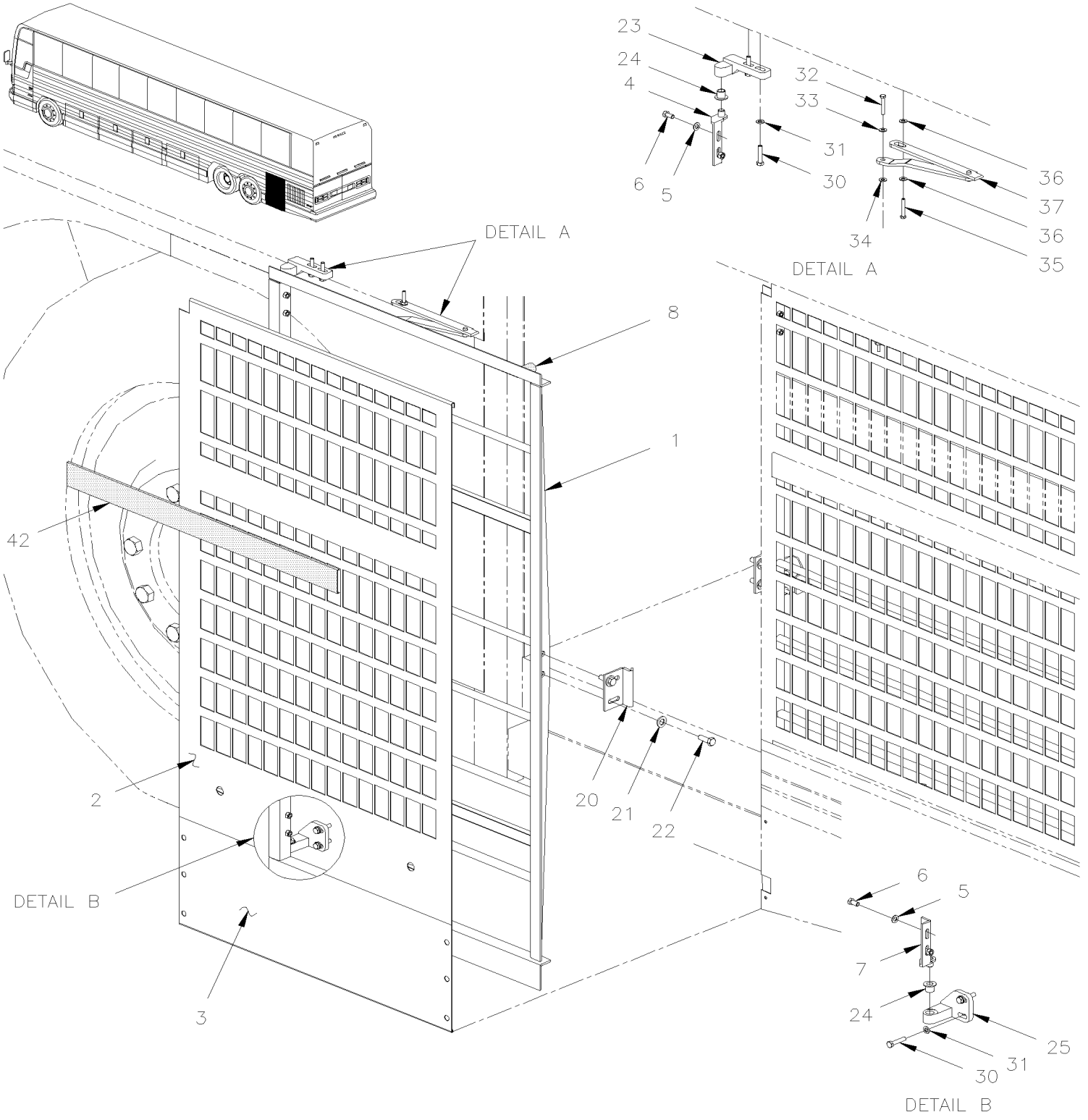

From 4-8165 To 8-9339		Date:07/2024	PAGE:Y2-1869-50

RADIATOR DOOR ASSY - MTH-45' SMALL

Item#	Part	Description	XLII 45	XLII MTH40	XLII MTH45	XLII MTH45E	NOTES
	288331	RADIATOR DOOR ASSY / W/FLUTED PANEL / SMALL			1		
1	285527	FRAME ASSY / RADIATOR DOOR / SMALL			1		
2	472997	PANEL, UPPER / W/FLUTED / S.B.			1		
2	477661	PANEL, UPPER / W/FLUTED / B.A. From 5-8469			1		
3	473508	PANEL, LOWER / S.B. To 5-8468			1		
3	477660	PANEL, LOWER / B.A. From 5-8469			1		
NS	504272	RIVET CHY Q BRAZ 3/16x1/8 SS			6		
4	286102	ARM ASSY			1		
4	289150	ARM ASSY			1		
5	502570	WASHER LO SPT 6.1x11.8x1.6 SS			4		
6	502686	SCREW CAP HEX M6-1.0x30 SS BK			4		
7	286098	ARM ASSY			1		
7	289149	ARM ASSY			1		
8	500356	WASHER LO SERR 6.1x16.0x0.9 N500			2		
9	502737	SCREW CAP HEX M6-1.0x25 SS BK			2		
20	287286	CATCH PIN / RETAINER 45MMx21MM 90°			1		
NS	287452	SHIM SPACER 70MM X 25 X 14GA			AR		
21	502857	WASHER LO SERR 8.2x26.3x1.8 N500			2		
22	502780	SCREW CAP HEX M8-1.25x25 SS BK			2		
23	286129	HINGE / UPPER			1		
24	284607	BUSHING, NYLON / (NOT INCLUDE W/HINGE)			2		
25	286128	LOWER HINGE			1		
30	502737	SCREW CAP HEX M6-1.0x25 SS BK			4		
31	430406	WASHER FLAT			4		
32	502568	SCREW MA PAN PH M6-1.0x20 EMN			1		
33	502573	WASHER FL 6.4x12.5x1.6 SS			1		
34	502511	NUT HEX NYRT M6-1.0 Z050			1		
35	502780	SCREW CAP HEX M8-1.25x25 SS BK			1		
36	500270	WASHER FL .406x1.000x.063 SS			2		
37	281912	GUIDE ASSY / L.H. DOOR			1		
42	473800	FINISHING MOULDING SS / 630MM			1		
NS	683083	ADHESIVE SIKA #252 / BLACK / 600 ml SAUSAGE			AR		
NS	5060044	TAPE RUB ADH2 CC POL 1/4" X 1/4" X 50' / BLACK I1C-N-A			AR		

From 4-8165 To 8-9339		Date:07/2024	PAGE:Y2-1869-55
RADIATOR DOOR ASSY - MTH-40' & MTH-45' ENT			

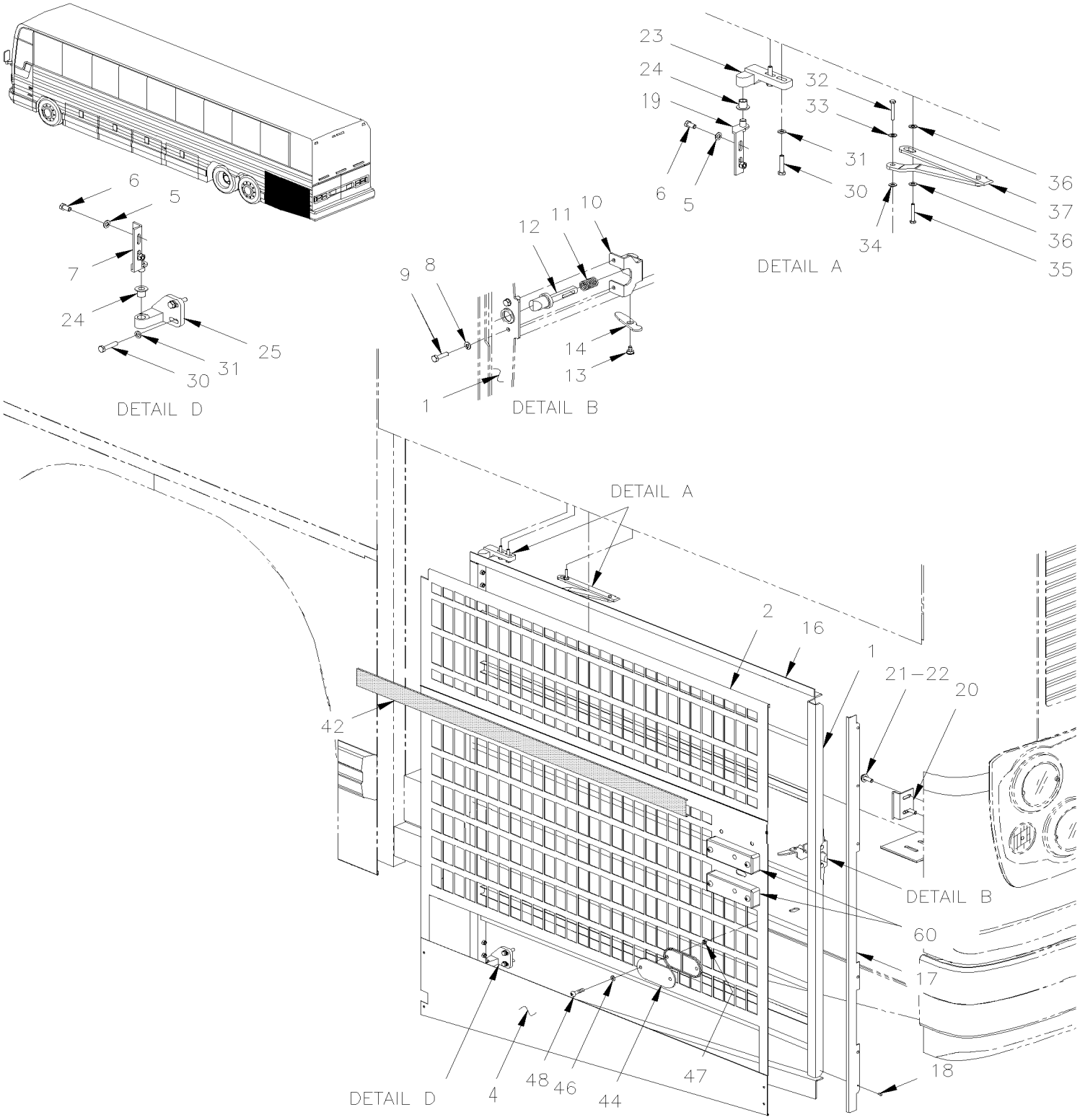

From 4-8165 To 8-9339		Date:07/2024	PAGE:Y2-1869-55

RADIATOR DOOR ASSY - MTH-40' & MTH-45' ENT

Item#	Part	Description	XLII 45	XLII MTH40	XLII MTH45	XLII MTH45E	NOTES
	288329	RADIATOR DOOR ASSY / W/FLUTED PANEL To 5-8813		1			
	288333	RADIATOR DOOR ASSY / W/FLUTED LOWER MOULDING				1	
1	284778	FRAME ASSY / RADIATOR DOOR		1		1	
2	473792	PANEL, UPPER / W/FLUTED / S.B. To 4-8358		1			
2	477486	PANEL, UPPER / W/FLUTED / S.B. From 4-8359 To 5-8468		1			
2	477663	PANEL, UPPER / W/FLUTED / B.A. From 5-8469 To 6-8813		1			
2	473794	PANEL, UPPER / W/FLAT UPPER MOULDING / S.B. To 4-8358				1	
2	477487	PANEL, UPPER / W/FLAT UPPER MOULDING / S.B. From 4-8359 To 5-8468				1	
2	477662	PANEL, UPPER / W/FLAT UPPER MOULDING / B.A. From 5-8469				1	
4	474457	PANEL, LOWER / S.B. To 5-8468		1		1	
4	477659	PANEL, LOWER / B.A. From 5-8469		1		1	
4	504272	RIVET CHY Q BRAZ 3/16x1/8 SS		4		4	
5	502737	SCREW CAP HEX M6-1.0x25 SS BK		4		4	
NS	430406	WASHER FLAT		4		4	
6	502686	SCREW CAP HEX M6-1.0x30 SS BK		4		4	
7	286098	ARM ASSY		1		1	
7	289149	ARM ASSY		1		1	
8	500356	WASHER LO SERR 6.1x16.0x0.9 N500		6		6	
9	502737	SCREW CAP HEX M6-1.0x25 SS BK		6		6	
10	288006	GUIDE PIN HOLDER		1		1	
11	502910	SPRING COMPRESSION / .720 O.D. 1.75 x .055		1		1	
12	284313	CATCH PIN SS / 90MM		1		1	
12	289585	CATCH PIN ACETAL / 90MM		1		1	
NS	507212	O-RING		1		1	
13	287271	RIVET SHR FL 9.95x3.6{4.8x4.8 SS		1		1	
14	286612	PIVOT		1		1	
16	504334	BUMPER RUBBER / .625 OD x .406 TH x .156 HOLE		1		1	
16	504339	RIVET POP DOME OE 1/8x3/8 SS		1		1	
16	504340	RIVET POP DOME OE 1/8x3/16 SS		7		7	
17	288527	FINISHING MOULDING 1110MM / B.A. From 5-8469		1		1	
18	504339	RIVET POP DOME OE 1/8x3/8 SS		AR		AR	
19	286102	ARM ASSY		1		1	
19	289150	ARM ASSY		1		1	
20	287286	CATCH PIN / RETAINER 45MMx21MM 90°		1		1	
NS	287452	SHIM SPACER 70MM X 25 X 14GA		AR		AR	
21	502857	WASHER LO SERR 8.2x26.3x1.8 N500		4		4	
22	502780	SCREW CAP HEX M8-1.25x25 SS BK		4		4	
23	286129	HINGE / UPPER		1		1	
24	284607	BUSHING, NYLON / (NOT INCLUDE W/HINGE)		2		2	
25	286128	LOWER HINGE		1		1	
30	502737	SCREW CAP HEX M6-1.0x25 SS BK		4		4	
31	430406	WASHER FLAT		4		4	

From 4-8165 To 8-9339		Date:07/2024	PAGE:Y2-1869-55

RADIATOR DOOR ASSY - MTH-40' & MTH-45' ENT

Item#	Part	Description	XLII 45	XLII MTH40	XLII MTH45	XLII MTH45E	NOTES
32	502568	SCREW MA PAN PH M6-1.0x20 EMN		1		1	
33	502573	WASHER FL 6.4x12.5x1.6 SS		1		1	
34	502511	NUT HEX NYRT M6-1.0 Z050		1		1	
35	502780	SCREW CAP HEX M8-1.25x25 SS BK		1		1	
36	500270	WASHER FL .406x1.000x.063 SS		2		2	
37	281912	GUIDE ASSY / L.H. DOOR		1		1	
42	473830	FINISHING MOULDING SS / 1123MM To 5-8813		1			
42	474389	FINISHING MOULDING PLASTIC 1123MM				1	
. NS	506769	. TAPE RUB ADH2 CC POL 1/8" x 1/4" x 60' / BLACK H1CC-N-#14				AR	
NS	683083	ADHESIVE SIKA #252 / BLACK / 600 ml SAUSAGE		AR		AR	
NS	5060044	TAPE RUB ADH2 CC POL 1/4" X 1/4" X 50' / BLACK I1C-N-A		AR		AR	
44	930320	REFLECTOR RED 1 3/16" x 4 7/16"		1		1	
46	500914	WASHER LO SPT .193x.334x.047 N500		2		2	
47	500787	NUT HEX #10-24 SS		2		2	
48	500606	SCREW MA TR PH #10-24x3/4 SS		2		2	
60	**Y2-0662-00**	**CLEARANCE & MARKER LIGHT**					

From 4-8165 To 8-9339		Date:07/2024	PAGE:Y2-1869-60
RADIATOR DOOR ASSY - MTH-45' LARGE			

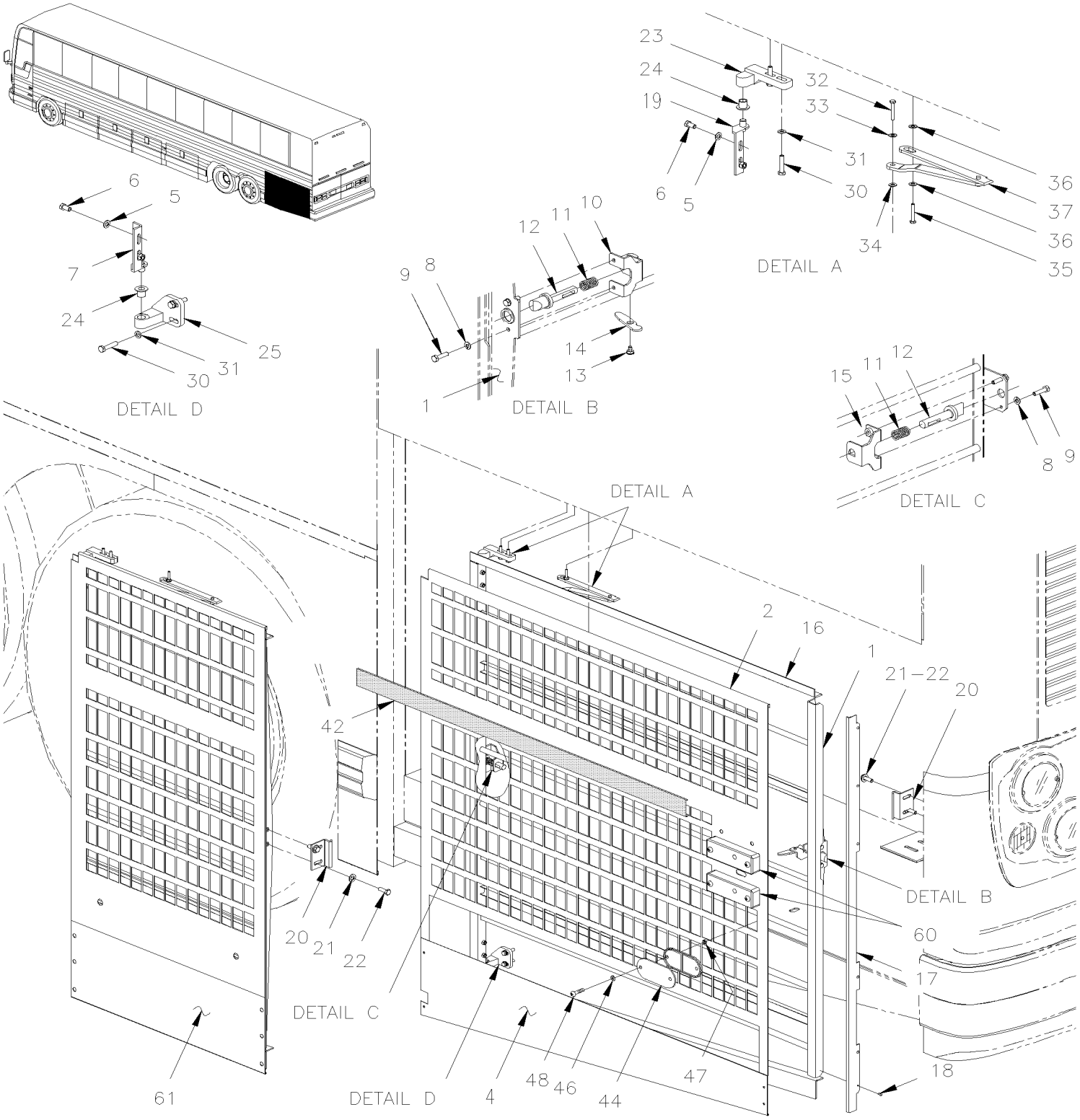

From 4-8165 To 8-9339		Date:07/2024	PAGE:Y2-1869-60

RADIATOR DOOR ASSY - MTH-45' LARGE

Item#	Part	Description	XLII 45	XLII MTH40	XLII MTH45	XLII MTH45E	NOTES
	288330	RADIATOR DOOR ASSY / W/FLUTED PANEL / LARGE			1		
1	284312	FRAME ASSY / RADIATOR DOOR / LARGE			1		
2	472638	PANEL, UPPER / W/FLUTED / S.B. To 4-8358			1		
2	477483	PANEL, UPPER / W/FLUTED / S.B. To 5-8468			1		
2	477658	PANEL, UPPER / W/FLUTED / B.A. From 5-8469			1		
4	474457	PANEL, LOWER / S.B.			1		
4	477659	PANEL, LOWER / B.A.			1		
NS	504272	RIVET CHY Q BRAZ 3/16x1/8 SS			4		
5	502737	SCREW CAP HEX M6-1.0x25 SS BK			4		
NS	430406	WASHER FLAT			4		
6	502686	SCREW CAP HEX M6-1.0x30 SS BK			4		
7	286098	ARM ASSY			1		
7	289149	ARM ASSY			1		
8	500356	WASHER LO SERR 6.1x16.0x0.9 N500			6		
9	502737	SCREW CAP HEX M6-1.0x25 SS BK			6		
10	288006	GUIDE PIN HOLDER			1		
11	502910	SPRING COMPRESSION / .720 O.D. 1.75 x .055			2		
12	284313	CATCH PIN SS / 90MM			2		
12	289585	CATCH PIN ACETAL / 90MM			1		
NS	507212	O-RING			2		
13	287271	RIVET SHR FL 9.95x3.6{4.8x4.8 SS			1		
14	286612	PIVOT			1		
15	284625	GUIDE PIN HOLDER			1		
16	504334	BUMPER RUBBER / .625 OD x .406 TH x .156 HOLE			1		
16	504339	RIVET POP DOME OE 1/8x3/8 SS			1		
17	288527	FINISHING MOULDING 1110MM / B.A.			1		
18	504339	RIVET POP DOME OE 1/8x3/8 SS			AR		
19	286102	ARM ASSY			1		
19	289150	ARM ASSY			1		
20	287286	CATCH PIN / RETAINER 45MMx21MM 90°			2		
NS	287452	SHIM SPACER 70MM X 25 X 14GA			AR		
21	502857	WASHER LO SERR 8.2x26.3x1.8 N500			4		
22	502780	SCREW CAP HEX M8-1.25x25 SS BK			4		
23	286129	HINGE / UPPER			1		
24	284607	BUSHING, NYLON / (NOT INCLUDE W/HINGE)			2		
25	286128	LOWER HINGE			1		
30	502737	SCREW CAP HEX M6-1.0x25 SS BK			4		
31	430406	WASHER FLAT			4		
32	502568	SCREW MA PAN PH M6-1.0x20 EMN			1		
33	502573	WASHER FL 6.4x12.5x1.6 SS			1		
34	502511	NUT HEX NYRT M6-1.0 Z050			1		
35	502780	SCREW CAP HEX M8-1.25x25 SS BK			1		

From 4-8165 To 8-9339		Date:07/2024	PAGE:Y2-1869-60

RADIATOR DOOR ASSY - MTH-45' LARGE

Item#	Part	Description	XLII 45	XLII MTH40	XLII MTH45	XLII MTH45E	NOTES
36	500270	WASHER FL .406x1.000x.063 SS			2		
37	281912	GUIDE ASSY / L.H. DOOR			1		
42	473830	FINISHING MOULDING SS / 1123MM			1		
NS	683083	ADHESIVE SIKA #252 / BLACK / 600 ml SAUSAGE			AR		
NS	5060044	TAPE RUB ADH2 CC POL 1/4" X 1/4" X 50' / BLACK I1C-N-A			AR		
44	930320	REFLECTOR RED 1 3/16" x 4 7/16"			1		
46	500914	WASHER LO SPT .193x.334x.047 N500			2		
47	500787	NUT HEX #10-24 SS			2		
48	500606	SCREW MA TR PH #10-24x3/4 SS			2		
60	**Y2-0662-00**	**CLEARANCE & MARKER LIGHT**					
61	**Y2-1869-50**	**RADIATOR DOOR ASSY - MTH-45' SMALL**					
		Z) NO ENGLISH DESCRIPTION					

From Y-7046 To 3-8164		Date:07/2024	PAGE:Y2-1870-00
ENGINE DOOR ASSY L.H.			

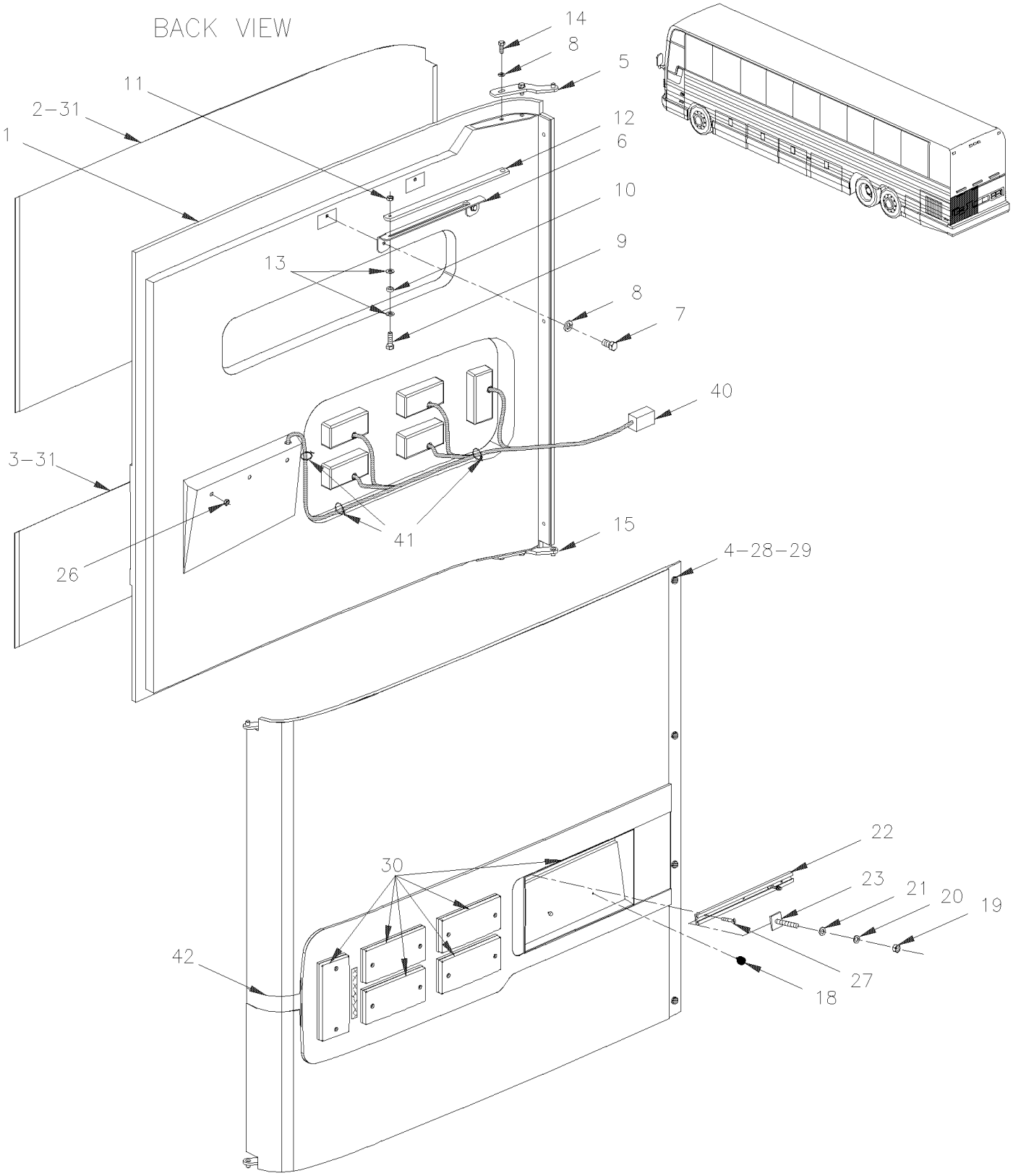

From Y-7046 To 3-8164		Date:07/2024	PAGE:Y2-1870-00
ENGINE DOOR ASSY L.H.			

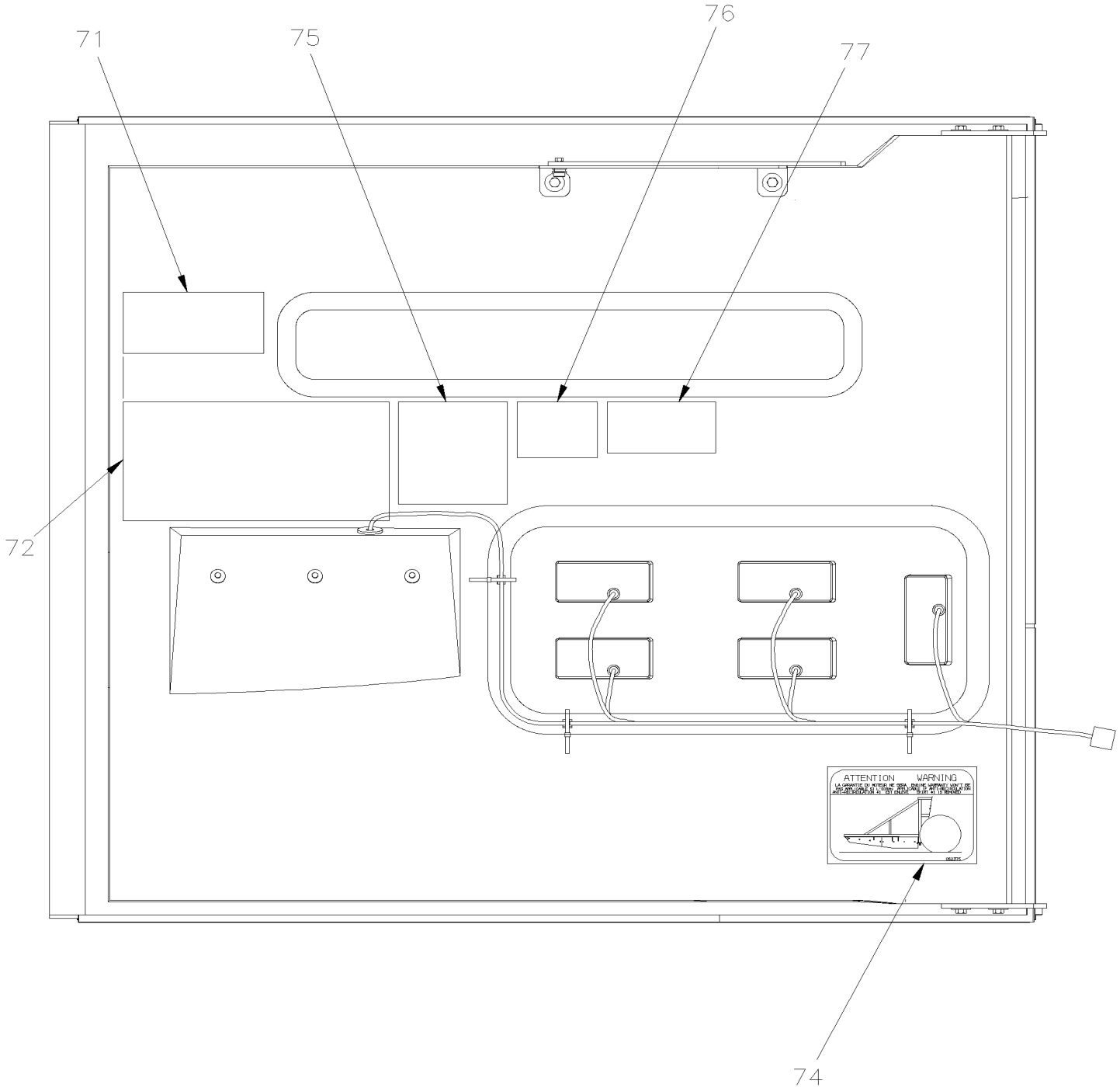

From Y-7046 To 3-8164		Date:07/2024	PAGE:Y2-1870-00

ENGINE DOOR ASSY L.H.

Item#	Part	Description	XLII 45	XLII MTH40	XLII MTH45	XLII MTH45E	NOTES
	286244P	ENGINE DOOR LH ASSY	1				
	287932P	ENGINE DOOR LH ASSY	AR				A
	286062P	ENGINE DOOR LH ASSY	AR				B
	288340	ENGINE DOOR LH ASSY / W"LED"	1				L
	286062P	ENGINE DOOR LH ASSY		1	1		
	286062P	ENGINE DOOR LH ASSY To 1-7435				1	
	287932P	ENGINE DOOR LH ASSY From 1-7436				1	C
1	285897	. ENGINE DOOR LH MOULDED		1	1	1	
1	287236	. ENGINE DOOR LH MOULDED	1				
1	287365	. ENGINE DOOR LH MOULDED / W/"LED"	1				L
2	285935	. UPPER PANEL	AR				B
2	285935	. UPPER PANEL		1	1		
2	285935	. UPPER PANEL To 1-7435				1	
3	285934	. LOWER PANEL	AR				A B
3	285934	. LOWER PANEL		1	1	1	
4	504334	. BUMPER RUBBER / .625 OD x .406 TH x .156 HOLE	4	4	4	4	
5	285913	. ARM ASSY To 3-8106	1	1	1	1	
5	287430	. ARM ASSY From 3-8107	1	1	1	1	
6	283776	. GUIDE RETAINING ARM	1	1	1	1	
7	502790	. SCREW CAP HEX M8-1.25x20 G8.8 Z050	2	2	2	2	
8	502584	. WASHER LO SERR 8.2x26.3x1.8 Z050	6	6	6	6	
9	502625	. SCREW SHR HEXS 5/16x3/8 {1/4-20	1	1	1	1	
10	502768	. WASHER FL RUB .312x.625x.125 NEO	1	1	1	1	
11	502819	. NUT HEX JAM 1/4-20 Z050	1	1	1	1	
12	283772	. ARM RETAINING	1	1	1	1	
13	500441	. WASHER FL .312x.734x.065 Z050	2	2	2	2	
14	502589	. SCREW CAP HEX M8-1.25x25 G8.8 Z050	4	4	4	4	
15	285907	. ARM ASSY To 3-8106	1	1	1	1	
15	287429	. ARM ASSY From 3-8107	1	1	1	1	
18	504498	. BUMPER PLUG / .406ODx.218THx.250HOLEx.125	2	2	2	2	
19	500787	. NUT HEX #10-24 SS	2	2	2	2	
20	502570	. WASHER LO SPT 6.1x11.8x1.6 SS	2	2	2	2	
21	502637	. WASHER FL .200x.437x.037 SS	2	2	2	2	
22	286053	. TRACK / LICENCE PLATE HOLDER 326MM	1	1	1	1	
23	504286	. T SCREW 10-24 X 3/4" / SS / PLATE HOLDER	2	2	2	2	
26	500286	. NUT WELL #6-32	3	3	3	3	
27	502666	. SCREW MA FL PH #6-32x3/4 SS BK	3	3	3	3	
28	504339	. RIVET POP DOME OE 1/8x3/8 SS	4	4	4	4	
29	5001008	. WASHER FL .218x.437x.062 RUB BK	4	4	4	4	
30	**Y2-0664-00**	**. REAR EXTERIOR LIGHTS & PLATE HOLDER**					
31	683097	. CLEANER SIKA #205 / CLEAR / 1000ml		AR	AR	AR	
40	064809	. CABLE / ENGINE DOOR REAR LAMP W/BULB	1	1	1	1	

From Y-7046 To 3-8164		Date:07/2024	PAGE:Y2-1870-00

ENGINE DOOR ASSY L.H.

Item#	Part	Description	XLII 45	XLII MTH40	XLII MTH45	XLII MTH45E	NOTES
NS	065712	. CABLE / ENGINE DOOR REAR LAMP W/LEDS	1	1	1	1	
41	504637	. CABLE TIE / 3/16" x 13"	5	5	5	5	
41	065655	CABLE / ENGINE DOOR REAR LAMP W/LEDS From 2-7889	1				L
42	286664	. FINISHING MOULDING SS		1	1	1	
42	286655	. FINISHING MOULDING L.H. / PLASTIC	1				
42	287888	. FINISHING MOULDING L.H. / PLASTIC / (LOWER 3MM THINER THAN UPPER	1			1	B
42	285899	FINISHING MOULDING L.H. / PLASTIC / (LOWER 3MM THINER THAN UPPER	1			1	D
NS	506769	. TAPE RUB ADH2 CC POL 1/8" x 1/4" x 60' / BLACK H1CC-N-#14	AR	AR	AR	AR	
50	506790	. TAPE RUB ADH2 CC POL 1/16" x 1/2" x 200' / BLACK I1C-N-A	AR	AR	AR	AR	
50	683084	. SEALANT SIKA #221 / GREY / 600 ml SAUSAGE	AR	AR	AR	AR	
60	**Y2-1870-10**	**ENGINE DOOR ASSY - INSTALLATION**					
71	070945	DECAL "DEXRON III OIL ONLY" To 2-7825	1	1	1	1	
71	071249	DECAL "TranSynd OIL ONLY" / ENGLISH & FRANCAIS From 2-7826	1	1	1	1	
71	071216	DECAL "EATON FULLER TRANSMISSIONS"	1				E
72	065187	DECAL / REAR JCT BOX COMPONENTS To 1-7524	1				
72	065453	DECAL / REAR JCT BOX COMPONENTS From 1-7525 To 2-7764	1				
72	065574	DECAL / REAR JCT BOX COMPONENTS From 2-7765 To 2-7823	1				
72	065601	DECAL / REAR JCT BOX COMPONENTS From 2-7824	1				
72	064912	DECAL / REAR JCT BOX COMPONENTS To 1-7531		1	1	1	
72	065454	DECAL / REAR JCT BOX COMPONENTS From 1-7532		1	1	1	
74	052375	DECAL / "WARNING WARANTY....." / ENGLISH & FRANCAIS	1	1	1	1	
74	052576	DECAL / "WARNING WARANTY....." / ENGLISH & SPANISH	1	1	1	1	
75	063711	DECAL / "WELDING..." / W/SERIES 60 & "WORLD TRANSMISSION / ENGLISH	1	1	1	1	
75	066046	DECAL / "WELDING..." / W/SERIES 60 & "WORLD TRANSMISSION / ENGLISH & SPANISH	1	1	1	1	
76	141064	DECAL / COLOR CODE / PNEUMATIC SYSTEM / ENGLISH & FRANCAIS	1	1	1	1	
77	453064	DECAL R-134A WITH NOMINALE CHARGE 6LBS 2 OZ	1	1			S T
77	453065	DECAL R-134A WITH NOMINALE CHARGE 6LBS 10 OZ			1	1	S
		A) BUS WITH "OPTION" FLUTED LOWER PANELLING					
		B) BUS WITH "OPTION" UPPER & LOWER SS REAR PANELLING					
		C) MTH ENT WITH UPPER FLAT SIDE PANELLING					
		D) BUS & MTH ENT WITH LOWER SS PANEL					
		E) WITH EATON TRANSMISSION ONLY					
		L) BUS EQUIPPED WITH "LED" OBLONG LAMP					
		S) WITH SMALL A/C SYSTEM					
		T) WITH A/C SYSTEM IN ARCEL RAC					

From 4-8165 To 8-9339		Date:07/2024	PAGE:Y2-1870-01
ENGINE DOOR ASSY L.H.			

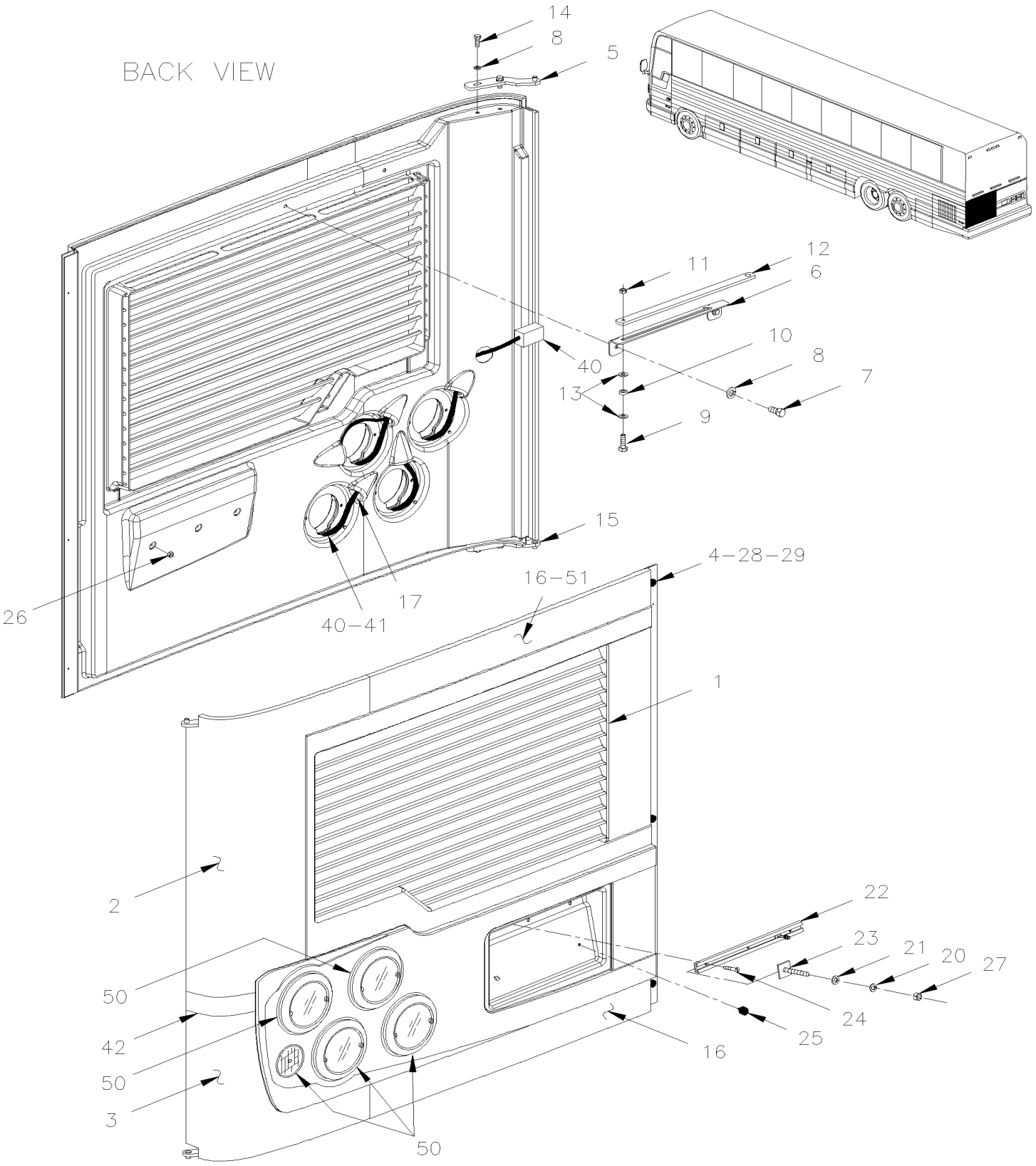

From 4-8165 To 8-9339		Date:07/2024	PAGE:Y2-1870-01
ENGINE DOOR ASSY L.H.			

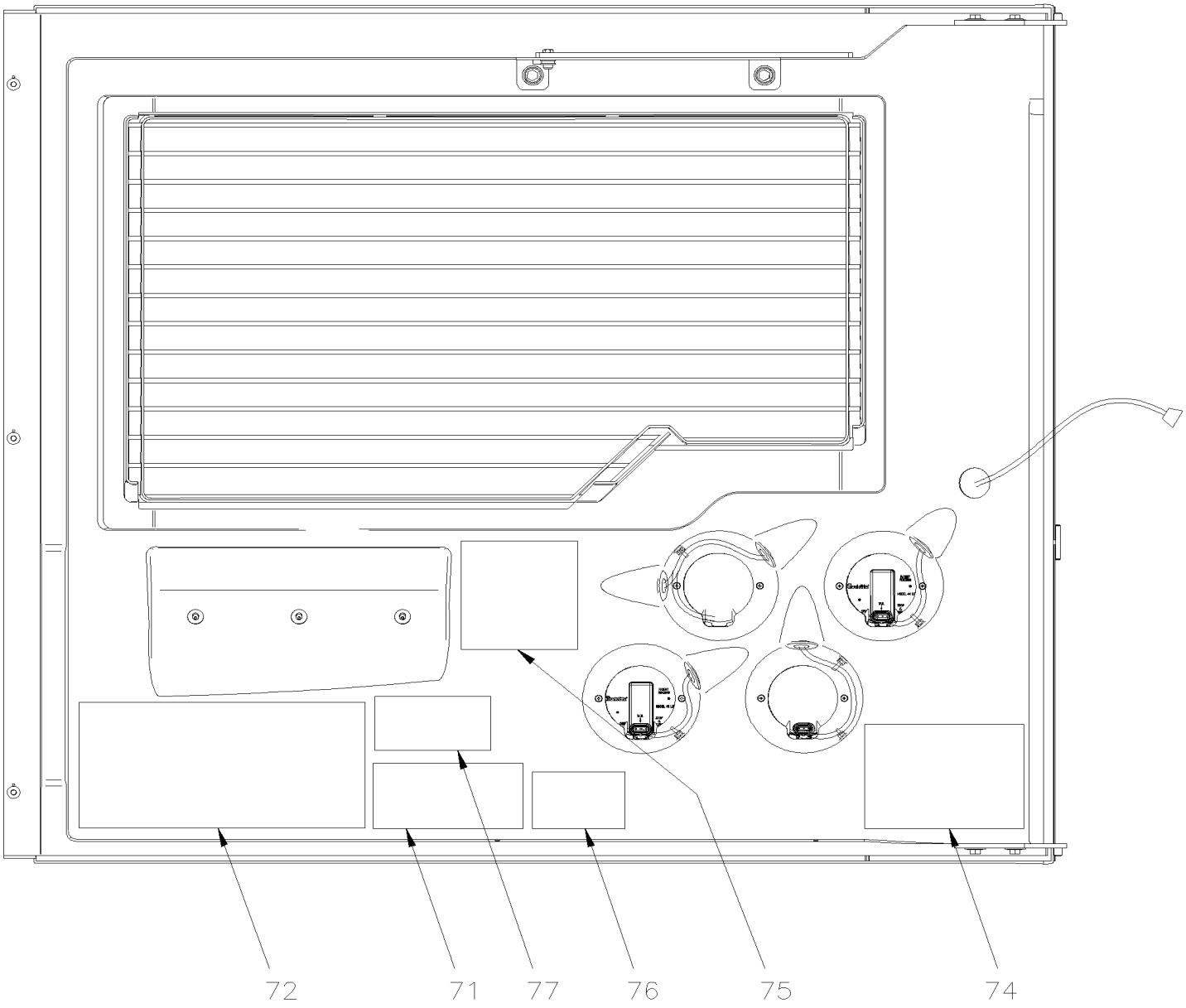

From 4-8165 To 8-9339		Date:07/2024	PAGE:Y2-1870-01

ENGINE DOOR ASSY L.H.

Item#	Part	Description	XLII 45	XLII MTH40	XLII MTH45	XLII MTH45E	NOTES
	288341	ENGINE DOOR LH ASSY To 6-8906	1				D
	288326	ENGINE DOOR LH ASSY To 6-8906	AR				A
	288325	ENGINE DOOR LH ASSY To 6-8906	AR				B D
	288325	ENGINE DOOR LH ASSY		1	1		D
	288326	ENGINE DOOR LH ASSY				1	
1	285774	. ENGINE DOOR LH MOULDED VENTED To 5-8471		1	1	1	
1	289306	. ENGINE DOOR LH MOULDED VENTED From 5-8472		1	1	1	
1	289431	. ENGINE DOOR LH MOULDED VENTED SERVICE		1	1	1	
1	286517	. ENGINE DOOR LH MOULDED VENTED To 5-8471	1			1	
1	289308	. ENGINE DOOR LH MOULDED VENTED From 5-8472	1			1	
1	289433	. ENGINE DOOR LH MOULDED VENTED SERVICE	1			1	
2	285375	. UPPER PANEL / S.B. To 6-8906	AR				B
2	285375	. UPPER PANEL / S.B. To 5-8468		1	1		
2	288528	. UPPER PANEL / B.A. From 5-8469		1	1		
3	286046	. LOWER PANEL / S.B. To 6-8906	AR				A
3	286046	. LOWER PANEL / S.B. To 5-8468		1	1	1	
3	288529	. LOWER PANEL / B.A. From 5-8469		1	1	1	
4	509828	. BUMPER RUBBER / .750 OD x .312 TH x .125 HOLE	6	6	6	6	
5	287430	. ARM ASSY	1	1	1	1	
6	283776	. GUIDE RETAINING ARM	1	1	1	1	
7	955295	. SCREW CAP HEX M8-1.25x20 G8.8 ZG603	2	2	2	2	
8	502857	. WASHER LO SERR 8.2x26.3x1.8 N500	6	6	6	6	
9	5001560	. SCREW SHR HEXS 5/16x3/8 {1/4-20 SS	1	1	1	1	
10	502768	. WASHER FL RUB .312x.625x.125 NEO	1	1	1	1	
11	500384	. NUT HEX JAM 1/4-20 G500	1	1	1	1	
12	283772	. ARM RETAINING	1	1	1	1	
13	502638	. WASHER FL .312x.734x.065 N500	2	2	2	2	
14	955297	. SCREW CAP HEX M8-1.25x25 G8.8 ZG603	4	4	4	4	
15	287429	. ARM ASSY	1	1	1	1	
16	285378	. PANEL UPPER & LOWER DOOR / S.B. To 5-8468		2	2		
16	288530	. PANEL UPPER & LOWER DOOR / B.A. From 5-8469		2	2		
16	285378	. PANEL UPPER & LOWER DOOR / S.B. To 5-8468				1	A
16	288530	. PANEL UPPER & LOWER DOOR / B.A. From 5-8469				1	
16	285378	. PANEL UPPER & LOWER DOOR / S.B. To 6-8906	1				A B
17	504530	. GROMMET / .750x1.250x.125x.312x1.625	5	5	5	5	
20	502570	. WASHER LO SPT 6.1x11.8x1.6 SS	2	2	2	2	
21	502637	. WASHER FL .200x.437x.037 SS	2	2	2	2	
22	286053	. TRACK / LICENCE PLATE HOLDER 326MM	1	1	1	1	
22	491572	. TRACK / LICENCE PLATE HOLDER 321 MM	1	1	1	1	
23	504286	. T SCREW 10-24 X 3/4" / SS / PLATE HOLDER	2	2	2	2	
24	502666	. SCREW MA FL PH #6-32x3/4 SS BK	3	3	3	3	
25	504498	. BUMPER PLUG / .406ODx.218THx.250HOLEx.125	2	2	2	2	

From 4-8165 To 8-9339		Date:07/2024	PAGE:Y2-1870-01

ENGINE DOOR ASSY L.H.

Item#	Part	Description	XLII 45	XLII MTH40	XLII MTH45	XLII MTH45E	NOTES
26	500286	. NUT WELL #6-32	3	3	3	3	
27	500787	. NUT HEX #10-24 SS	2	2	2	2	
28	509827	. SCREW MA RND PH M4-0.7x20 SS	3	3	3	3	
29	502557	. NUT HEX NYRT M4-0.7 SS	3	3	3	3	
31	683097	. CLEANER SIKA #205 / CLEAR / 1000ml		AR	AR	AR	
40	065712	. CABLE / ENGINE DOOR REAR LAMP W/LEDS To 7-9095	1	1	1	1	
40	066491	. CABLE / ENGINE DOOR REAR LAMP W/LEDS From 7-9096			1	1	
41	504637	. CABLE TIE / 3/16" x 13"	5	5	5	5	
42	285377	. FINISHING MOULDING SS / S.B. To 6-8906	AR				B
42	285377	. FINISHING MOULDING SS / S.B. To 5-8468		1	1		B
42	288531	. FINISHING MOULDING SS / B.A. From 5-8469		1	1		
42	285899	. FINISHING MOULDING L.H. / PLASTIC / (LOWER 3MM THINER THAN UPPER				1	
42	285365	. FINISHING MOULDING / PLASTIC To 6-8906	1				
42	285899	. FINISHING MOULDING L.H. / PLASTIC / (LOWER 3MM THINER THAN UPPER To 6-8906	1				B
NS	506769	. TAPE RUB ADH2 CC POL 1/8" x 1/4" x 60' / BLACK H1CC-N-#14	AR	AR	AR	AR	
50	**Y2-0664-01**	**. REAR EXTERIOR LIGHTS & PLATE HOLDER**					
51	506790	. TAPE RUB ADH2 CC POL 1/16" x 1/2" x 200' / BLACK I1C-N-A	AR	AR	AR	AR	
51	683084	. SEALANT SIKA #221 / GREY / 600 ml SAUSAGE	AR	AR	AR	AR	
51	683083	. ADHESIVE SIKA #252 / BLACK / 600 ml SAUSAGE	AR	AR	AR	AR	
60	**Y2-1870-10**	**ENGINE DOOR ASSY - INSTALLATION**					
71	071249	DECAL "TranSynd OIL ONLY" / ENGLISH & FRANCAIS	1	1	1	1	
72	065601	DECAL / REAR JCT BOX COMPONENTS To 4-8270	1				
72	065946	DECAL / REAR JCT BOX COMPONENTS From 4-8271 To 7-9095	1				
72	065454	DECAL / REAR JCT BOX COMPONENTS To 4-8251		1	1	1	
72	065948	DECAL / REAR JCT BOX COMPONENTS From 4-8252 To 7-9095		1	1	1	
74	052375	DECAL / "WARNING WARANTY....." / ENGLISH & FRANCAIS	1	1	1	1	
74	052576	DECAL / "WARNING WARANTY....." / ENGLISH & SPANISH	1	1	1	1	
75	063711	DECAL / "WELDING..." / W/SERIES 60 & "WORLD TRANSMISSION / ENGLISH To 7-9095	1				
75	066046	DECAL / "WELDING..." / W/SERIES 60 & "WORLD TRANSMISSION / ENGLISH & SPANISH To 7-9095	1				
75	063711	DECAL / "WELDING..." / W/SERIES 60 & "WORLD TRANSMISSION / ENGLISH To 7-9095		1	1	1	
75	066046	DECAL / "WELDING..." / W/SERIES 60 & "WORLD TRANSMISSION / ENGLISH & SPANISH To 7-9095		1	1	1	
75	067072	DECAL / "CAUTION" BEFORE WELDING…." / / ENGLISH From 7-9096		1	1	1	
76	141064	DECAL / COLOR CODE / PNEUMATIC SYSTEM / ENGLISH & FRANCAIS	1	1	1	1	
77	454105	DECAL "R-134A NOMINAL CHARGE...." / ENGLISH & FRANCAIS		1	1	1	
77	454100	DECAL "R-134A NOMINAL CHARGE...." / ENGLISH & FRANCAIS	1				
		A) BUS WITH "OPTION" FLUTED LOWER PANELLING					
		B) BUS WITH "OPTION" UPPER & LOWER SS REAR PANELLING					
		D) THIS DOOR ASSEMBLY DO NOT INCLUDE ITEM #40					

From Y-7046 To 3-8164		Date:07/2024	PAGE:Y2-1870-05
ENGINE DOOR ASSY R.H.			

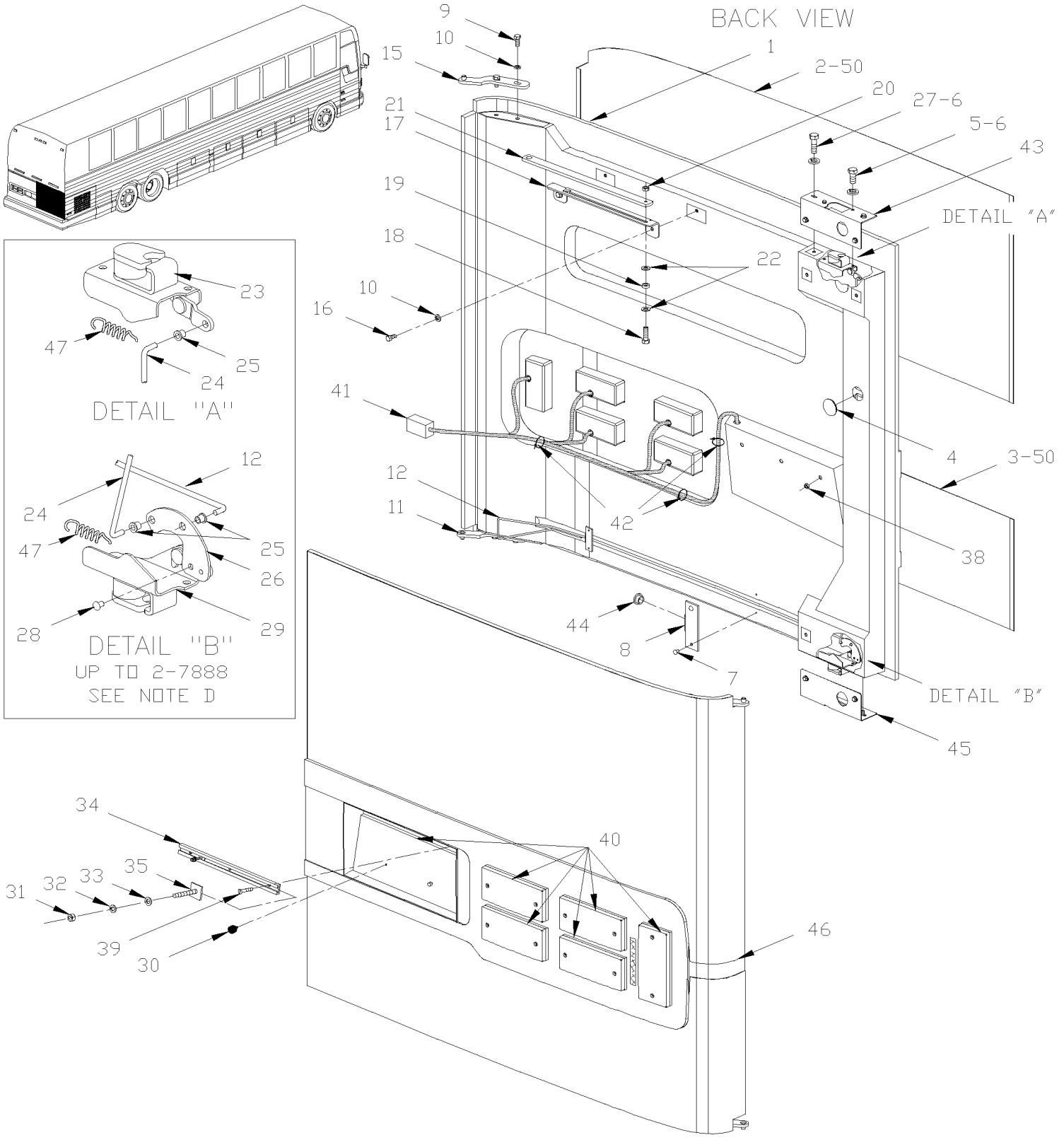

From Y-7046 To 3-8164		Date:07/2024	PAGE:Y2-1870-05
ENGINE DOOR ASSY R.H.			

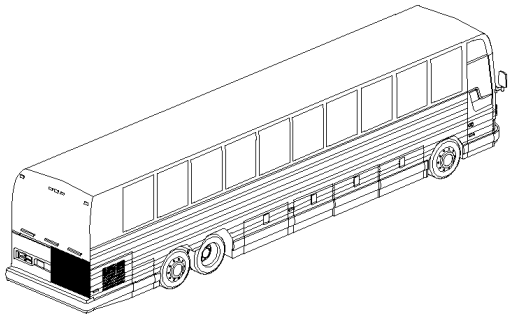

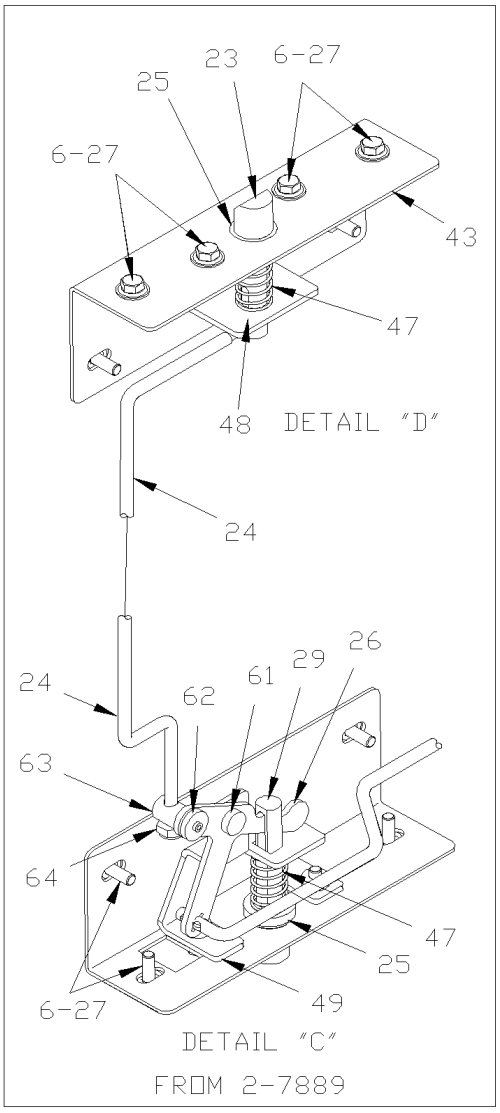

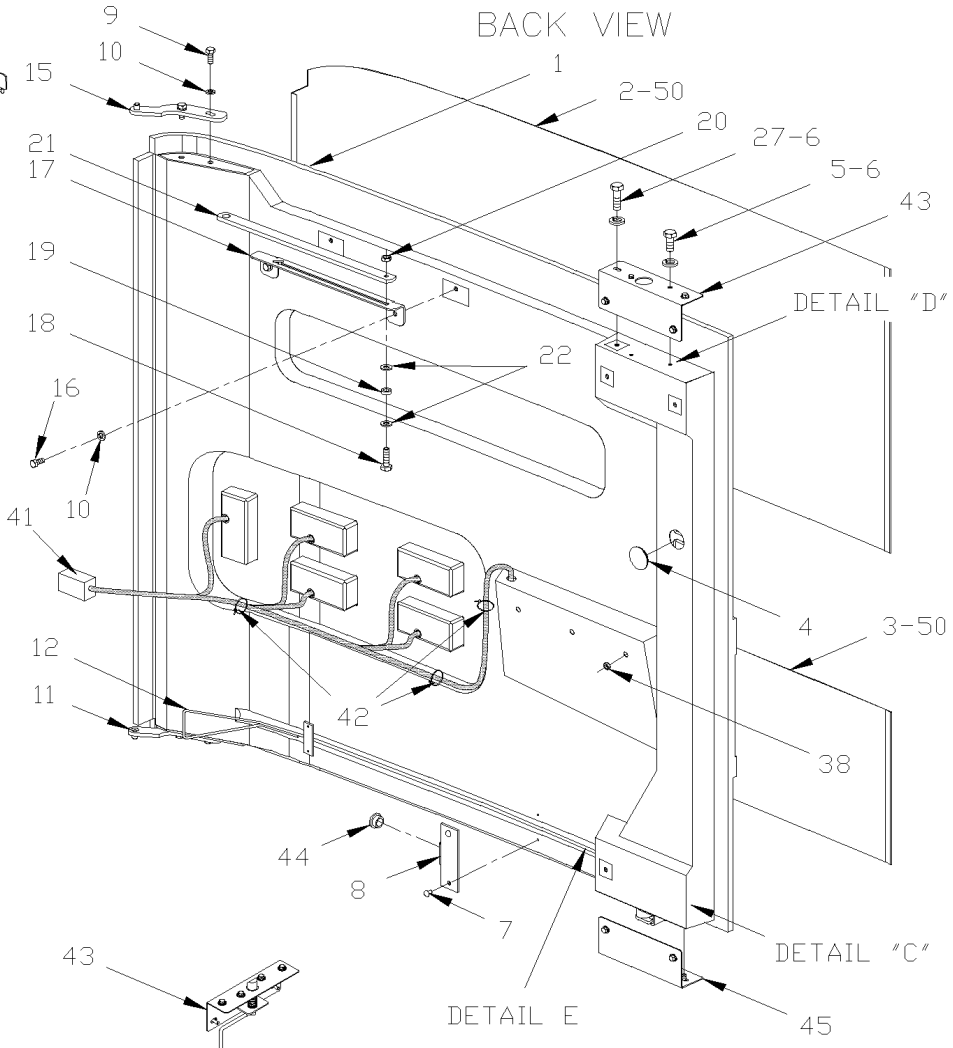

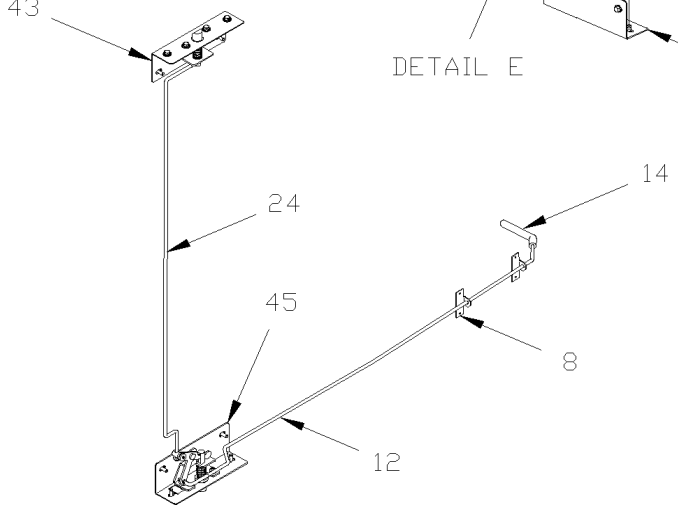

From Y-7046 To 3-8164		Date:07/2024	PAGE:Y2-1870-05

ENGINE DOOR ASSY R.H.

Item#	Part	Description	XLII 45	XLII MTH40	XLII MTH45	XLII MTH45E	NOTES
	286245P	ENGINE DOOR RH ASSY To 2-7888	1				
	287931P	ENGINE DOOR RH ASSY To 2-7888	AR				A
	288344	ENGINE DOOR RH ASSY From 2-7889	AR				A
	286059P	ENGINE DOOR RH ASSY To 2-7888	AR				B
	288816	ENGINE DOOR RH ASSY From 2-7889	AR				B
	286059P	ENGINE DOOR RH ASSY To 2-7888		1	1		
	288816	ENGINE DOOR RH ASSY From 2-7889		1	1		
	286059P	ENGINE DOOR RH ASSY To 1-7435				1	
	287931P	ENGINE DOOR RH ASSY From 1-7436 To 2-7888				1	C
	288344	ENGINE DOOR RH ASSY From 2-7889				1	C
	288342	ENGINE DOOR RH ASSY / W"LED"	1				L
1	287235	. ENGINE DOOR RH MOULDED	1				
1	287364	. ENGINE DOOR RH MOULDED / W"LED"	1				L
1	285896	. ENGINE DOOR RH MOULDED		1	1	1	
2	285886	. UPPER PANEL	AR				B
2	285886	. UPPER PANEL		1	1		
2	285886	. UPPER PANEL To 1-7435				1	
3	285885	. LOWER PANEL	AR				A B
3	285885	. LOWER PANEL		1	1	1	
4	507295	. HOLE PLUG BUTTON / 1.375 O.D. BLACK	3	3	3	3	
5	502563	. SCREW CAP HEX M6-1.0x12 G8.8 Z050 To 2-7888	4	4	4	4	D
6	502582	. WASHER LO SERR 6.1x16.2x0.9 Z050	12	12	12	12	
7	504339	. RIVET POP DOME OE 1/8x3/8 SS	4	4	4	4	
8	285882	. FIXTURE To 2-7888	2	2	2	2	D
8	280143	. FIXTURE / W/HOLE FOR ROD From 2-7889	2	2	2	2	E
9	502589	. SCREW CAP HEX M8-1.25x25 G8.8 Z050	4	4	4	4	
10	502584	. WASHER LO SERR 8.2x26.3x1.8 Z050	6	6	6	6	
11	285913	. ARM ASSY To 3-8106	1	1	1	1	
11	287430	. ARM ASSY From 3-8107	1	1	1	1	
12	285922	. CONTROL ROD To 2-7888	1	1	1	1	D
12	287314	. CONTROL ROD From 2-7889	1	1	1	1	E
14	506018	. HANDLE PLASTIC / 1/4" I.D. X 4" From 2-7889	1	1	1	1	E
15	285907	. ARM ASSY To 3-8106	1	1	1	1	
15	287429	. ARM ASSY From 3-8107	1	1	1	1	
16	502790	. SCREW CAP HEX M8-1.25x20 G8.8 Z050	2	2	2	2	
17	283771	. GUIDE RETAINING ARM	1	1	1	1	
18	502625	. SCREW SHR HEXS 5/16x3/8 {1/4-20	1	1	1	1	
19	502768	. WASHER FL RUB .312x.625x.125 NEO	1	1	1	1	
20	502819	. NUT HEX JAM 1/4-20 Z050	1	1	1	1	
21	283772	. ARM RETAINING	1	1	1	1	
22	500441	. WASHER FL .312x.734x.065 Z050	2	2	2	2	
23	780587	. LOCK SPAGNOLET L.H. / W/G-FITTING To 2-7888	1	1	1	1	D

From Y-7046 To 3-8164		Date:07/2024	PAGE:Y2-1870-05

ENGINE DOOR ASSY R.H.

Item#	Part	Description	XLII 45	XLII MTH40	XLII MTH45	XLII MTH45E	NOTES
. NS	507607	. . GREASE FITTING / M6-1.00 To 2-7888	1	1	1	1	D
23	287381	. CATCH PIN SS / 80.5MM From 2-7889	1	1	1	1	E
24	285923	. ROD / JUNCTION To 2-7888	1	1	1	1	D
24	287276	. ROD / JUNCTION From 2-7889	1	1	1	1	E
25	504456	. CLIP / RETAINER ROD / WHITE OR RED To 2-7888	3	3	3	3	D
25	507212	. O-RING From 2-7889	2	2	2	2	E
26	285941	. PIVOT To 2-7755	1	1	1	1	D
26	288022	. PIVOT From 2-7756 To 2-7888	1	1	1	1	D
26	287277	. PIVOT From 2-7889	1	1	1	1	E
27	502531	. SCREW CAP HEX M6-1.0x16 G8.8 Z050	8	8	8	8	
28	504379	. RIVET POP DOME OE 3/16x1/4 SS	1	1	1	1	
29	780588	. LOCK SPAGNOLET R.H. / W/G-FITTING To 2-7755	1	1	1	1	D
. NS	780340	. . CLIP, RETAINER ROD To 2-7755	1	1	1	1	D
. NS	507607	. . GREASE FITTING / M6-1.00 To 2-7755	1	1	1	1	D
29	780653	. LOCK SPAGNOLET R.H. / W/G-FITTING From 2-7756 To 2-7888	1	1	1	1	D
. NS	780340	. . CLIP, RETAINER ROD From 2-7756 To 2-7888	1	1	1	1	D
. NS	507607	. . GREASE FITTING / M6-1.00 From 2-7756 To 2-7888	1	1	1	1	D
29	287391	. CATCH PIN SS / 90.5MM From 2-7889	1	1	1	1	E
30	504498	. BUMPER PLUG / .406ODx.218THx.250HOLEx.125	2	2	2	2	
31	500787	. NUT HEX #10-24 SS	2	2	2	2	
32	502570	. WASHER LO SPT 6.1x11.8x1.6 SS	2	2	2	2	
33	502637	. WASHER FL .200x.437x.037 SS	2	2	2	2	
34	286053	. TRACK / LICENCE PLATE HOLDER 326MM	1	1	1	1	
35	504286	. T SCREW 10-24 X 3/4" / SS / PLATE HOLDER	2	2	2	2	
38	500286	. NUT WELL #6-32	3	3	3	3	
39	502666	. SCREW MA FL PH #6-32x3/4 SS BK	3	3	3	3	
40	**Y2-0664-00**	**REAR EXTERIOR LIGHTS & PLATE HOLDER**					
41	064809	. CABLE / ENGINE DOOR REAR LAMP W/BULB	1	1	1	1	
41	065655	. CABLE / ENGINE DOOR REAR LAMP W/LEDS From 2-7889	1				L
42	504637	. CABLE TIE / 3/16" x 13"	5	5	5	5	
43	285764	. SUPPORT LOCK / UPPER To 2-7888	1	1	1	1	D
43	287270	. SUPPORT LOCK / UPPER From 2-7889	1	1	1	1	E
44	504083	. SNAP BUSHING / .250x.468.406 To 2-7888	2	2	2	2	D
45	285914	. SUPPORT LOCK / LOWER To 2-7888	1	1	1	1	D
45	287275	. SUPPORT LOCK / LOWER From 2-7889	1	1	1	1	E
46	286664	. FINISHING MOULDING SS		1	1	1	
46	286656	. FINISHING MOULDING R.H. / PLASTIC	1				
46	287887	. FINISHING MOULDING R.H. / PLASTIC / (LOWER 3MM THINER THAN UPPER	1			1	F
47	284914	. SPRING EXTENSION / .305 O.D. x 1.562 x .051 To 2-7888	2	2	2	2	D
47	502910	. SPRING COMPRESSION / .720 O.D. 1.75 x .055 From 2-7889	2	2	2	2	E
48	287382	. GUIDE PIN HOLDER UPPER From 2-7889	1	1	1	1	E
49	287291	. GUIDE PIN HOLDER LOWER From 2-7889	1	1	1	1	E

From Y-7046 To 3-8164		Date:07/2024	PAGE:Y2-1870-05

ENGINE DOOR ASSY R.H.

Item#	Part	Description	XLII 45	XLII MTH40	XLII MTH45	XLII MTH45E	NOTES
50	683097	. CLEANER SIKA #205 / CLEAR / 1000ml	AR	AR	AR	AR	
50	683084	. SEALANT SIKA #221 / GREY / 600 ml SAUSAGE	AR	AR	AR	AR	
50	506769	. TAPE RUB ADH2 CC POL 1/8" x 1/4" x 60' / BLACK H1CC-N-#14	AR	AR	AR	AR	
50	682176	. SEALANT SIKA #221 / BLACK / 310ml CARTRIDGE	AR	AR	AR	AR	
60	**Y2-1870-10**	**ENGINE DOOR ASSY - INSTALLATION**					
61	287271	. RIVET SHR FL 9.95x3.6{4.8x4.8 SS	1	1	1	1	E
62	280140	. RETAINING WASHER	1	1	1	1	E
63	280142	. ROD HOLDER	1	1	1	1	E
64	5001251	. NUT HEX NYRT 1/4-20 SS	1	1	1	1	E
NS	287225	KIT, R.H. ENGINE DOOR LOCK IMPROVEMENT To 2-7888	1	1	1	1	
. NS	WB02-01	. SEE WARRANTY BULLETIN To 2-7888	1	1	1	1	
		A) BUS WITH "OPTION" FLUTED LOWER PANELLING					
		B) BUS WITH "OPTION" UPPER & LOWER SS REAR PANELLING					
		C) MTH ENT WITH UPPER FLAT SIDE PANELLING					
		D) FOR PRODUCT IMPROVEMENT DOOR LOCK MECHANISM ASK FOR KIT #287225 Up to 2-7888					
		E) THOSE PART ARE INCLUDED IN KIT #287225					
		F) BUS & MTH ENT WITH LOWER SS PANEL					
		L) BUS EQUIPPED WITH "LED" OBLONG LAMP					

From 4-8165 To 8-9339		Date:07/2024	PAGE:Y2-1870-06
ENGINE DOOR ASSY R.H.			

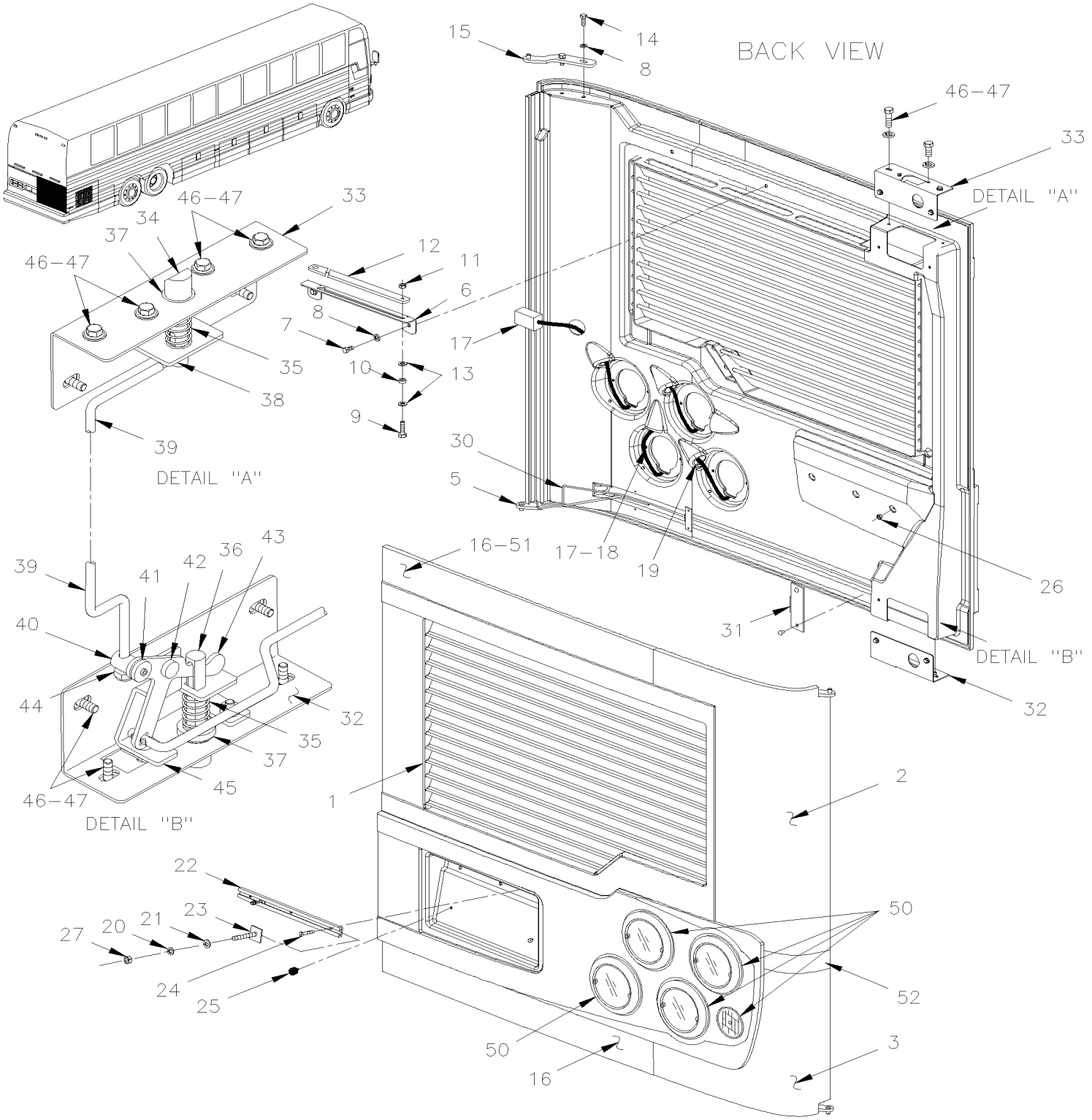

From 4-8165 To 8-9339		Date:07/2024	PAGE:Y2-1870-06

ENGINE DOOR ASSY R.H.

Item#	Part	Description	XLII 45	XLII MTH40	XLII MTH45	XLII MTH45E	NOTES
	288343	ENGINE DOOR RH ASSY To 6-8906	1				D
	288328	ENGINE DOOR RH ASSY To 6-8906	AR				A
	288327	ENGINE DOOR RH ASSY To 6-8906	AR				B D
	288327	ENGINE DOOR RH ASSY		1	1		D
	288328	ENGINE DOOR RH ASSY				1	
1	286518	. ENGINE DOOR RH MOULDED VENTED To 5-8471	1			1	
1	289307	. ENGINE DOOR RH MOULDED VENTED From 5-8472	1			1	
1	289432	. ENGINE DOOR RH MOULDED VENTED SERVICE	1			1	
1	285541	. ENGINE DOOR RH MOULDED VENTED To 5-8471		1	1		
1	289305	. ENGINE DOOR RH MOULDED VENTED From 5-8472		1	1		
1	289430	. ENGINE DOOR RH MOULDED VENTED SERVICE		1	1		
2	285376	. UPPER PANEL / S.B. To 6-8906	AR				B
2	285376	. UPPER PANEL / S.B. To 5-8468		1	1		
2	288532	. UPPER PANEL / B.A. From 5-8469		1	1		
3	286047	. LOWER PANEL / S.B. To 6-8906	AR				A B
3	286047	. LOWER PANEL / S.B. To 5-8468		1	1	1	
3	288533	. LOWER PANEL / B.A. From 5-8469		1	1	1	
5	287430	. ARM ASSY	1	1	1	1	
6	283771	. GUIDE RETAINING ARM	1	1	1	1	
7	955295	. SCREW CAP HEX M8-1.25x20 G8.8 ZG603	2	2	2	2	
8	502857	. WASHER LO SERR 8.2x26.3x1.8 N500	6	6	6	6	
9	5001560	. SCREW SHR HEXS 5/16x3/8 {1/4-20 SS	1	1	1	1	
10	502768	. WASHER FL RUB .312x.625x.125 NEO	1	1	1	1	
11	500384	. NUT HEX JAM 1/4-20 G500	1	1	1	1	
12	283772	. ARM RETAINING	1	1	1	1	
13	502638	. WASHER FL .312x.734x.065 N500	2	2	2	2	
14	955297	. SCREW CAP HEX M8-1.25x25 G8.8 ZG603	4	4	4	4	
15	287429	. ARM ASSY	1	1	1	1	
16	285378	. PANEL UPPER & LOWER DOOR / S.B. To 5-8468				1	
16	288530	. PANEL UPPER & LOWER DOOR / B.A. From 5-8469				1	
16	285378	. PANEL UPPER & LOWER DOOR / S.B. To 5-8468		2	2		
16	288530	. PANEL UPPER & LOWER DOOR / B.A. From 5-8469		2	2		
16	285378	. PANEL UPPER & LOWER DOOR / S.B. To 6-8906	1				A B
17	065712	. CABLE / ENGINE DOOR REAR LAMP W/LEDS To 7-9095	1	1	1	1	
17	066491	. CABLE / ENGINE DOOR REAR LAMP W/LEDS From 7-9096			1	1	
18	504637	. CABLE TIE / 3/16" x 13"	AR	AR	AR	AR	
19	504530	. GROMMET / .750x1.250x.125x.312x1.625	5	5	5	5	
20	502570	. WASHER LO SPT 6.1x11.8x1.6 SS	2	2	2	2	
21	502637	. WASHER FL .200x.437x.037 SS	2	2	2	2	
22	286053	. TRACK / LICENCE PLATE HOLDER 326MM	1	1	1	1	
22	491572	. TRACK / LICENCE PLATE HOLDER 321 MM	1	1	1	1	
23	504286	. T SCREW 10-24 X 3/4" / SS / PLATE HOLDER	2	2	2	2	

From 4-8165 To 8-9339		Date:07/2024	PAGE:Y2-1870-06

ENGINE DOOR ASSY R.H.

Item#	Part	Description	XLII 45	XLII MTH40	XLII MTH45	XLII MTH45E	NOTES
24	502666	. SCREW MA FL PH #6-32x3/4 SS BK	3	3	3	3	
25	504498	. BUMPER PLUG / .406ODx.218THx.250HOLEx.125	2	2	2	2	
26	500286	. NUT WELL #6-32	3	3	3	3	
27	500787	. NUT HEX #10-24 SS	2	2	2	2	
30	287314	. CONTROL ROD	1	1	1	1	
NS	506018	. HANDLE PLASTIC / 1/4" I.D. X 4"	1	1	1	1	
31	280143	. FIXTURE / W/HOLE FOR ROD	2	2	2	2	
NS	504339	. RIVET POP DOME OE 1/8x3/8 SS	4	4	4	4	
32	285018	. SUPPORT LOCK / LOWER	1	1	1	1	
33	286581	. SUPPORT LOCK / UPPER	1	1	1	1	
34	287381	. CATCH PIN SS / 80.5MM	1	1	1	1	
NS	506225	. TAPE RUB ADH1 CC POL 1/16" x 1/4" x 100' / GREY 2520	AR	AR	AR	AR	
35	502910	. SPRING COMPRESSION / .720 O.D. 1.75 x .055	2	2	2	2	
36	287391	. CATCH PIN SS / 90.5MM	1	1	1	1	
37	507212	. O-RING	2	2	2	2	
38	287382	. GUIDE PIN HOLDER UPPER	1	1	1	1	
39	287276	. ROD / JUNCTION	1	1	1	1	
40	280142	. ROD HOLDER	1	1	1	1	
41	280140	. RETAINING WASHER	1	1	1	1	
42	287271	. RIVET SHR FL 9.95x3.6{4.8x4.8 SS	1	1	1	1	
43	287277	. PIVOT	1	1	1	1	
44	5001251	. NUT HEX NYRT 1/4-20 SS	1	1	1	1	
45	287291	. GUIDE PIN HOLDER LOWER	1	1	1	1	
46	955271	. SCREW CAP HEX M6-1.0x16 G8.8 ZG603	12	12	12	12	
47	500356	. WASHER LO SERR 6.1x16.0x0.9 N500	12	12	12	12	
50	**Y2-0664-01**	**. REAR EXTERIOR LIGHTS & PLATE HOLDER**					
51	506790	. TAPE RUB ADH2 CC POL 1/16" x 1/2" x 200' / BLACK I1C-N-A	AR	AR	AR	AR	
51	683084	. SEALANT SIKA #221 / GREY / 600 ml SAUSAGE	AR	AR	AR	AR	
51	683083	. ADHESIVE SIKA #252 / BLACK / 600 ml SAUSAGE	AR	AR	AR	AR	
52	285365	. FINISHING MOULDING / PLASTIC To 6-8906	1				
52	285377	. FINISHING MOULDING SS / S.B. To 6-8906	AR				A
52	285377	. FINISHING MOULDING SS / S.B. To 5-8468		1	1		A
52	288531	. FINISHING MOULDING SS / B.A. From 5-8469		1	1		
52	285900	. FINISHING MOULDING R.H. / PLASTIC / (LOWER 3MM THINER THAN UPPER	1			1	C
60	**Y2-1870-10**	**ENGINE DOOR ASSY - INSTALLATION**					
		A) BUS WITH "OPTION" FLUTED LOWER PANELLING					
		B) BUS WITH "OPTION" UPPER & LOWER SS REAR PANELLING					
		C) BUS & MTH ENT WITH LOWER SS PANEL					
		D) THIS DOOR ASSEMBLY DO NOT INCLUDE ITEM #17					

From Y-7046 To 8-9339		Date:07/2024	PAGE:Y2-1870-10
ENGINE DOOR ASSY - INSTALLATION			

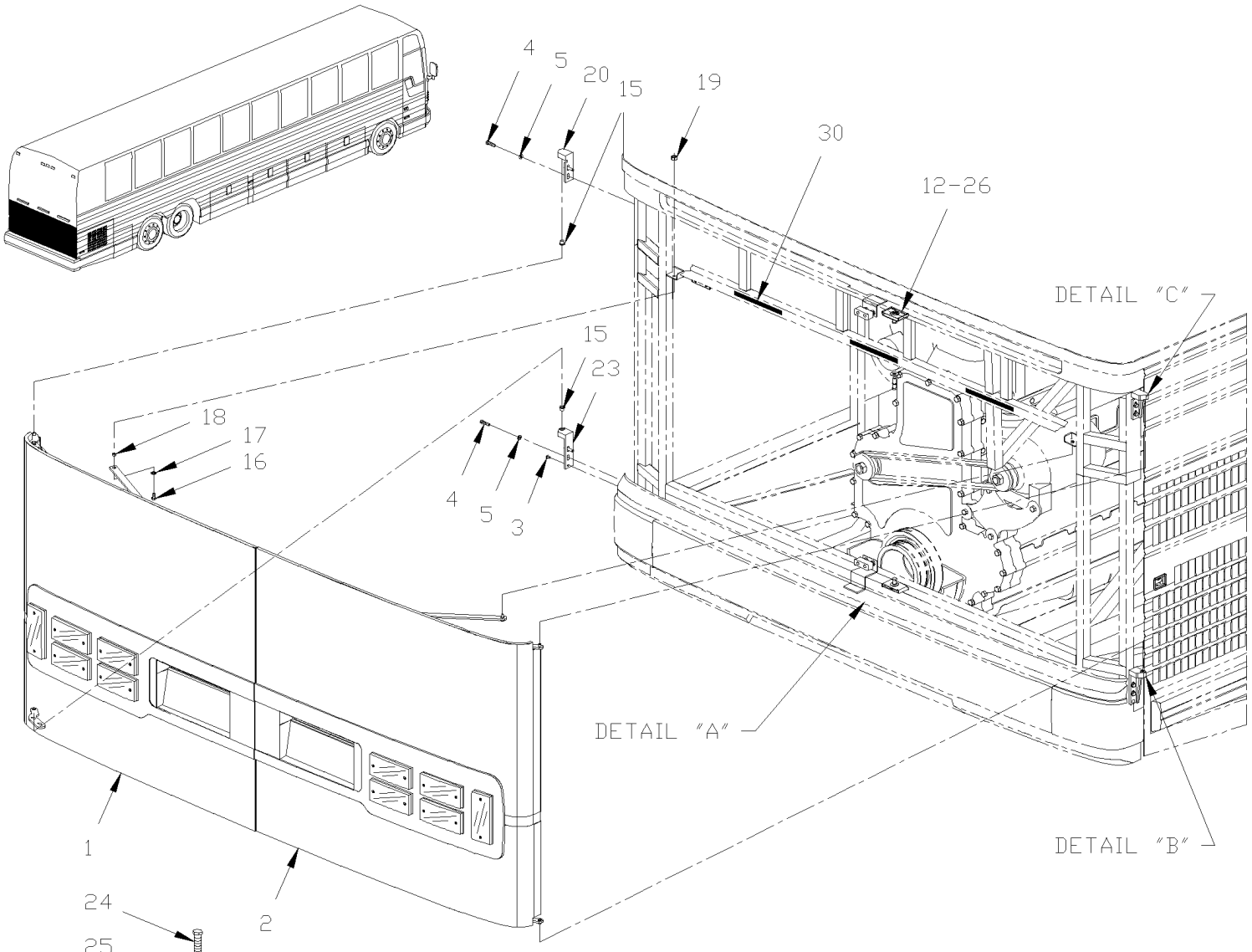

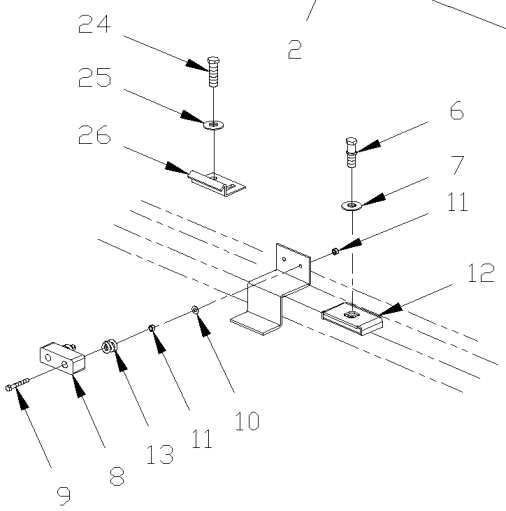

DETAIL "A"

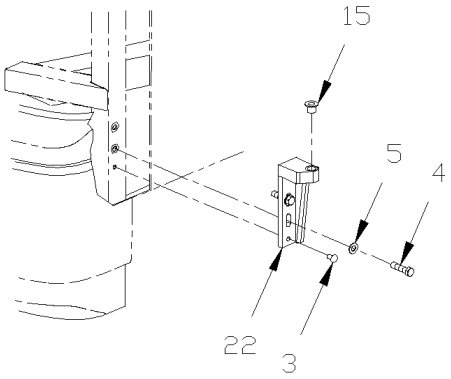

DETAIL "B"

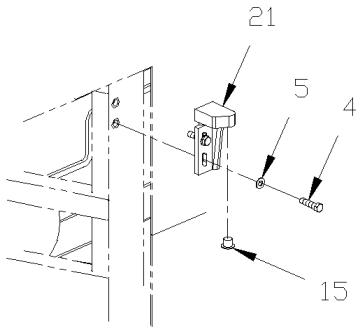

DETAIL "C"

From Y-7046 To 8-9339		Date:07/2024	PAGE:Y2-1870-10

ENGINE DOOR ASSY - INSTALLATION

Item#	Part	Description	XLII 45	XLII MTH40	XLII MTH45	XLII MTH45E	NOTES
1	**Y2-1870-00**	**ENGINE DOOR ASSY L.H. To 3-8164**					
1	**Y2-1870-01**	**ENGINE DOOR ASSY L.H. From 4-8165**					
2	**Y2-1870-05**	**ENGINE DOOR ASSY R.H. To 3-8164**					
2	**Y2-1870-06**	**ENGINE DOOR ASSY R.H. From 4-8165**					
3	504122	RIVET POP DOME OE 1/4x3/8 AL	2	2	2	2	
4	502780	SCREW CAP HEX M8-1.25x25 SS BK	5	5	5	5	
5	502584	WASHER LO SERR 8.2x26.3x1.8 Z050	8	8	8	8	
6	284438	PIN STRIKER To 2-7888	1	1	1	1	A
7	284447	WASHERS BELLEVILLE To 2-7888	1	1	1	1	A
8	506250	RUBBER BUMPER	1	1	1	1	
9	502708	SCREW CAP HEX M5-0.8x35 SS	2	2	2	2	
10	500411	WASHER FL .260x.697x.050 SS	2	2	2	2	
11	5001449	NUT HEX M5-0.8 SS	4	4	4	4	
12	282869	FLOATING NUT ASSY WITH CASE To 1-7627	2	2	2	2	A
12	287943	FLOATING NUT ASSY WITH CASE From 1-7628 To 2-7888	2	2	2	2	A
13	502205	SPRING COMPRESSION / .850 O.D. x .750 x .072	2	2	2	2	
15	284607	BUSHING, NYLON / (NOT INCLUDE W/HINGE)	4	4	4	4	
16	502780	SCREW CAP HEX M8-1.25x25 SS BK	10	10	10	10	
17	502583	WASHER LO SERR 8.15x22.3x1.0 Z050	2	2	2	2	
18	283770	SPACER / TO FIX RETAINING ARM	2	2	2	2	
19	966171	NUT HEX NYRT M8x1.25 SS	2	2	2	2	
20	285930	HINGE UPPER L.H.	1	1	1	1	
21	285854	HINGE UPPER R.H.	1	1	1	1	
22	285855	HINGE LOWER R.H.	1	1	1	1	
23	285931	HINGE LOWER L.H.	1	1	1	1	
24	500204	SCREW CAP HEX 7/16-14X1 1/4 SS To 2-7888	2	2	2	2	B
24	502780	SCREW CAP HEX M8-1.25x25 SS BK From 2-7889	4	4	4	4	
25	502582	WASHER LO SERR 6.1x16.2x0.9 Z050 To 2-7888	2	2	2	2	B
25	5001161	WASHER LO SPT 8.1x14.8x2.0 SS-304 From 2-7889	4	4	4	4	
26	280141	CATCH PIN / RETAINER To 2-7888	2	2	2	2	B
26	287286	CATCH PIN / RETAINER 45MMx21MM 90° From 2-7889	2	2	2	2	
30	920009	REFLECTOR STRIP RED	AR	AR	AR	AR	
NS	286688	DECAL DOOR OPEN	1	1	1	1	
NS	287225	KIT, R.H. ENGINE DOOR LOCK IMPROVEMENT To 2-7888	AR	AR	AR	AR	
. NS	WB02-01	. SEE WARRANTY BULLETIN To 2-7888	1	1	1	1	
		A) FOR PRODUCT IMPROVEMENT DOOR LOCK MECHANISM ASK FOR KIT #287225					
		B) PART ARE INCLUDE IN KIT #287225					

From Y-7046 To 8-9339		Date:07/2024	PAGE:Y2-1875-00
FUEL TANK FILLING DOOR			

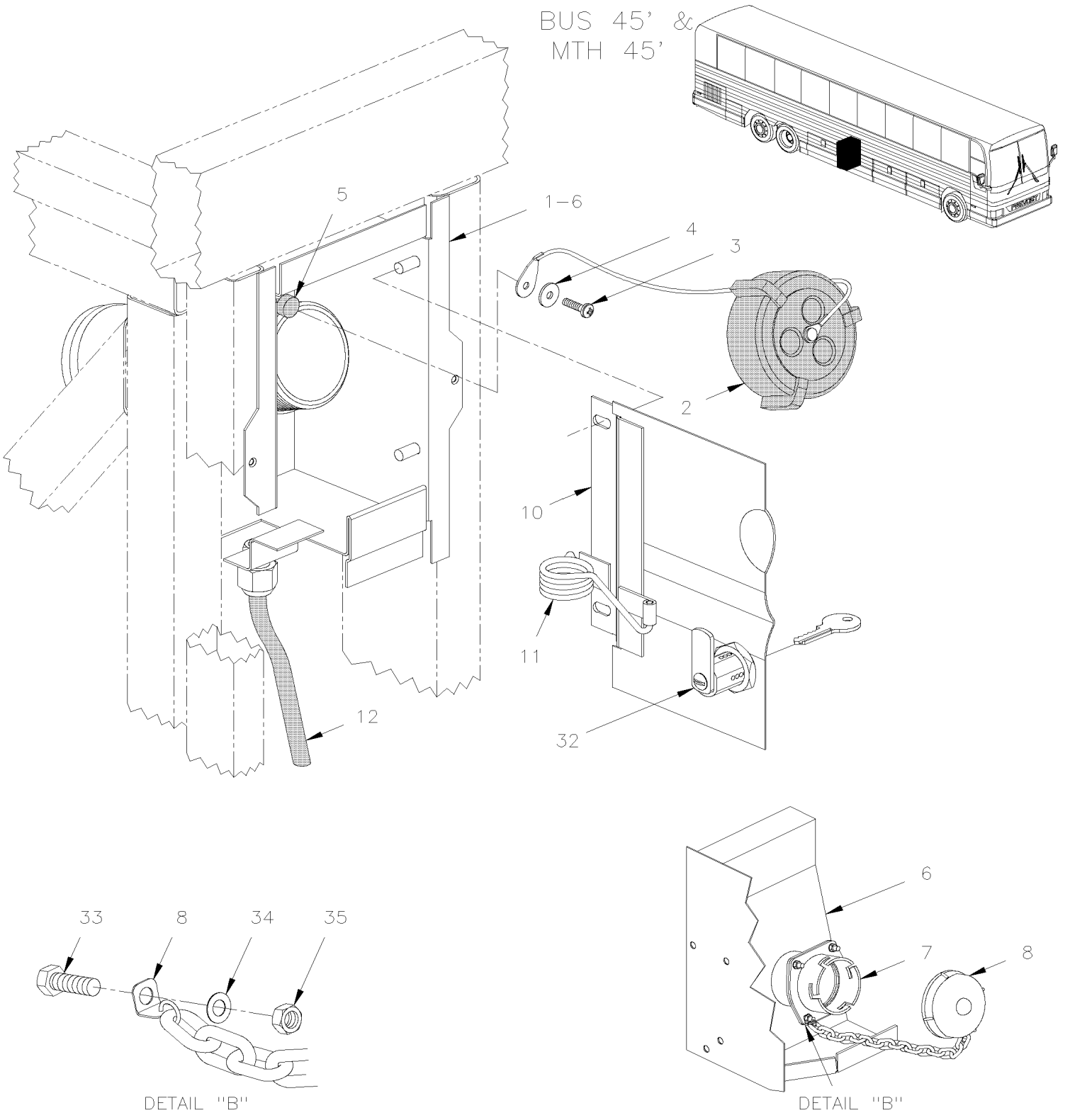

From Y-7046 To 8-9339		Date:07/2024	PAGE:Y2-1875-00
FUEL TANK FILLING DOOR			

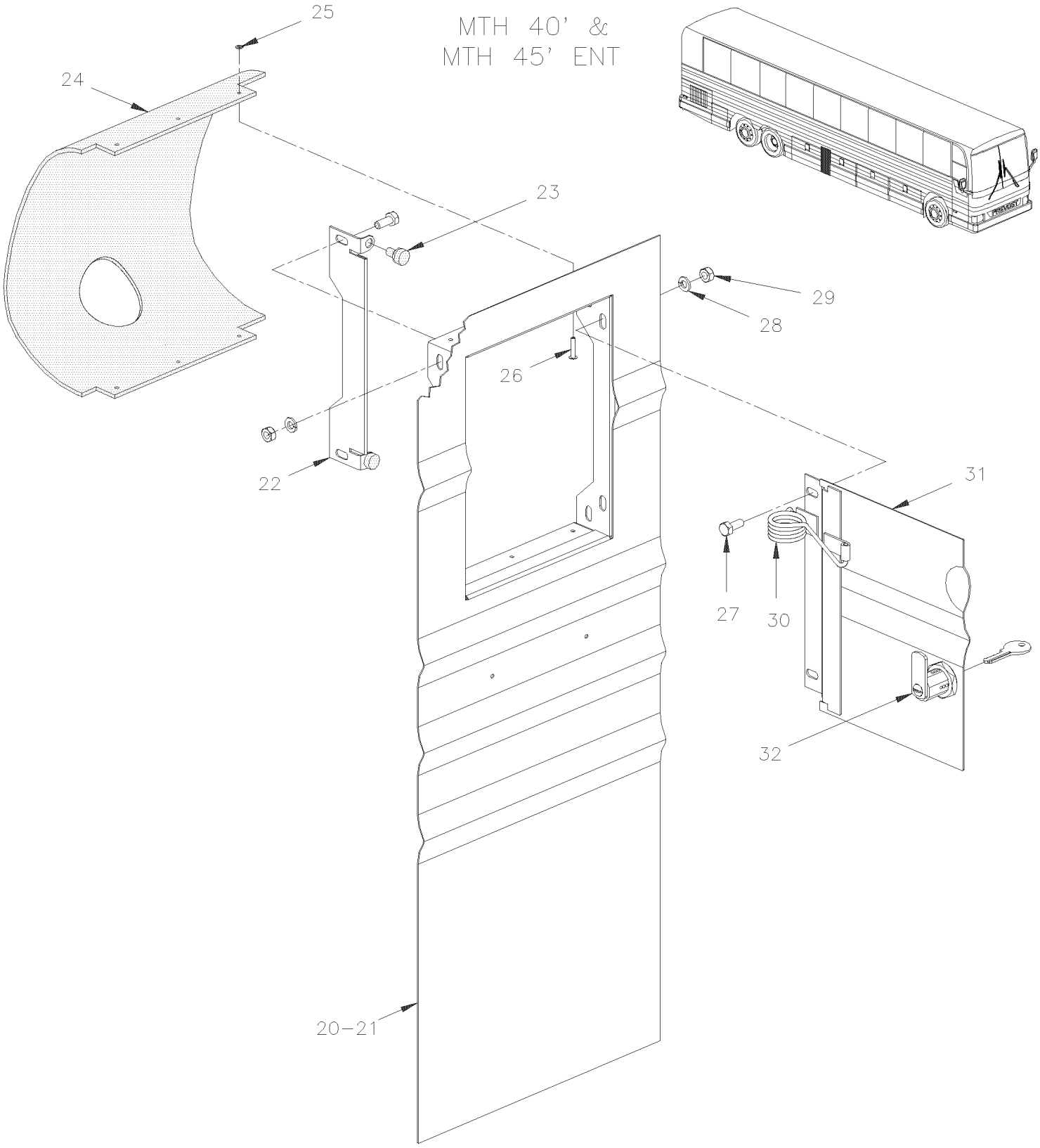

From Y-7046 To 8-9339		Date:07/2024	PAGE:Y2-1875-00

FUEL TANK FILLING DOOR

Item#	Part	Description	XLII 45	XLII MTH40	XLII MTH45	XLII MTH45E	NOTES
1	032232	BOX ASSY, L.H. To 1-7605	1		1		
1	032418	BOX ASSY, L.H. From 1-7606	1		1		
1	032230	BOX ASSY, R.H. To 1-7605	1		1		
1	032416	BOX ASSY, R.H. From 1-7606	1		1		
2	531424	FUEL FILLING CAP / SCREW TYPE CAP	1	1	1	1	
. NS	530133	. REPLACEMENT GASKET FOR 2" FEMALE CAP	1	1	1	1	
3	500572	SCREW MA TR PH #10-24x1/2 SS BK	1	1	1	1	
4	500470	WASHER LO SPT .193x.334x.047 Z050	1	1	1	1	
5	470949	SPACER RUBBER 3/4" O.D. / S.Q.	1	1	1	1	
6	032389	BOX ASSY, R.H. To 6-8906	1				B
6	032390	BOX ASSY, L.H. To 6-8906	1				B
7	531413	. ADAPTOR To 6-8906	1				B
8	531412	. FUEL FILLING CAP / "EMCO WHEATON" TYPE To 6-8906	1				B
10	473356	DOOR ASSY, R.H. / W/LOCK / S.B. To Y-7379			1		A
10	473356	DOOR ASSY, R.H. / W/LOCK / S.B. To Y-7379	AR				A
10	474983	DOOR ASSY, R.H. / W/LOCK / S.B. From Y-7380 To 5-8468			1		A
10	477544	DOOR ASSY, R.H. / W/LOCK / B.A. From 5-8469			1		
10	474983	DOOR ASSY, R.H. / W/LOCK / S.B. From Y-7380 To 6-8906	AR				A
10	473358	DOOR ASSY, L.H. / W/LOCK / S.B. To Y-7379			1		A
10	473358	DOOR ASSY, L.H. / W/LOCK / S.B. To Y-7379	AR				A
10	474984	DOOR ASSY, L.H. / W/LOCK / S.B. From Y-7380 To 5-8468			1		A
10	477553	DOOR ASSY, L.H. / W/LOCK / B.A. From 5-8469			1		
10	474984	DOOR ASSY, L.H. / W/LOCK / S.B. From Y-7380 To 6-8906	AR				A
10	474394	DOOR ASSY, R.H. / W/LOCK To Y-7376	1				
10	474981	DOOR ASSY, R.H. / W/LOCK From Y-7377 To 6-8906	1				
10	474395	DOOR ASSY, L.H. / W/LOCK To Y-7376	1				
10	474986	DOOR ASSY, L.H. / W/LOCK From Y-7377 To 6-8906	1				
10	474397	DOOR ASSY, R.H. To Y-7376	1				
10	474980	DOOR ASSY, R.H. From Y-7377 To 6-8906	1				
10	474396	DOOR ASSY, L.H. To Y-7376	1				
10	474987	DOOR ASSY, L.H. From Y-7377 To 6-8906	1				
11	031175	SPRING, TORSION / 1 O.D. x .634 x .125	1		1		
12	503472	TUBE, NYLON 3/8 O.D. / GREY S.L.	AR		AR		
20	474430	PANEL R.H. UPPER ASSY W/FUEL DOOR RH / S.B. To Y-7439		1		1	
20	474979	PANEL R.H. UPPER ASSY W/FUEL DOOR RH / S.B. From Y-7440 To 5-8468		1		1	
20	477538	PANEL R.H. UPPER ASSY W/FUEL DOOR RH / B.A. From 5-8469		1		1	
21	474429	PANEL L.H. UPPER ASSY W/FUEL DOOR LH / S.B. To Y-7439		1		1	
21	474646	PANEL L.H. UPPER ASSY W/FUEL DOOR LH / S.B. From Y-7440 To 5-8468		1		1	
21	477549	PANEL L.H. UPPER ASSY W/FUEL DOOR LH / B.A. From 5-8469		1		1	
NS	473469	. DOOR STOPPER		1		1	
22	474428	. PANEL 257MM X 690MM / S.B. To 5-8468		1		1	
22	477539	. PANEL 257MM X 690MM / B.A. From 5-8469		1		1	

From Y-7046 To 8-9339		Date:07/2024	PAGE:Y2-1875-00

FUEL TANK FILLING DOOR

Item#	Part	Description	XLII 45	XLII MTH40	XLII MTH45	XLII MTH45E	NOTES
23	504654	. BUMPER PLUG / 7/8" X 15/32 X 3/64		2		2	
24	032175	. SPLASHGUARD / RUBBER		1		1	
25	5001067	. WASHER FL .128x.312x.032 SS		6		6	
26	504473	. RIVET POP DOME OE 1/8x1/4 SS		6		6	
27	5001181	SCREW CAP HEX M6-1.0x12 SS	4	4	4	4	
28	502570	WASHER LO SPT 6.1x11.8x1.6 SS	4	4	4	4	
29	502565	NUT HEX M6-1.0 SS	4	4	4	4	
30	031175	. SPRING, TORSION / 1 O.D. x .634 x .125		1		1	
31	474434	. DOOR ASSY, R.H. / W/LOCK / S.B. To Y-7439		1		1	
31	474982	. DOOR ASSY, R.H. / W/LOCK / S.B. From Y-7440 To 5-8468		1		1	
31	477541	. DOOR ASSY, R.H. / W/LOCK / B.A. From 5-8469		1		1	
31	474433	. DOOR ASSY, L.H. / W/LOCK / S.B. To Y-7439		1		1	
31	474985	. DOOR ASSY, L.H. / W/LOCK / S.B. From Y-7440 To 5-8468		1		1	
31	477550	. DOOR ASSY, L.H. / W/LOCK / B.A. From 5-8469		1		1	
32	780180	LOCK CYLINDER W/KEY / "VIRO"	1	1	1	1	
. NS	780501	. KEY	1	1	1	1	
32	780806	LOCK CYLINDER W/KEY / "VIRO"	1	1	1	1	
. NS	780501	. KEY	1	1	1	1	
NS	289549	PIVOT LOCK ACTUATOR 42.4MM / W/11MM OFFSET	1	1	1	1	S
33	5001433	SCREW CAP HEX M6-1.0x25 SS To 6-8906	4				B
34	502573	WASHER FL 6.4x12.5x1.6 SS To 6-8906	4				B
35	502511	NUT HEX NYRT M6-1.0 Z050 To 6-8906	4				B
		A) COACH WITH STAINLESS STEEL SIDE LOWER PANELLING					
		B) COACH WITH "EMCO WHEATON"					
		S) REQUIERED ONLY IN SERVICE IF YOU NEED TO CHANGE YOUR OLD CYLINDER LOCK # 780180					

From Y-7046 To 8-9339		Date:07/2024	PAGE:Y2-1879-00
FRONT SERVICE DOOR ASSY			

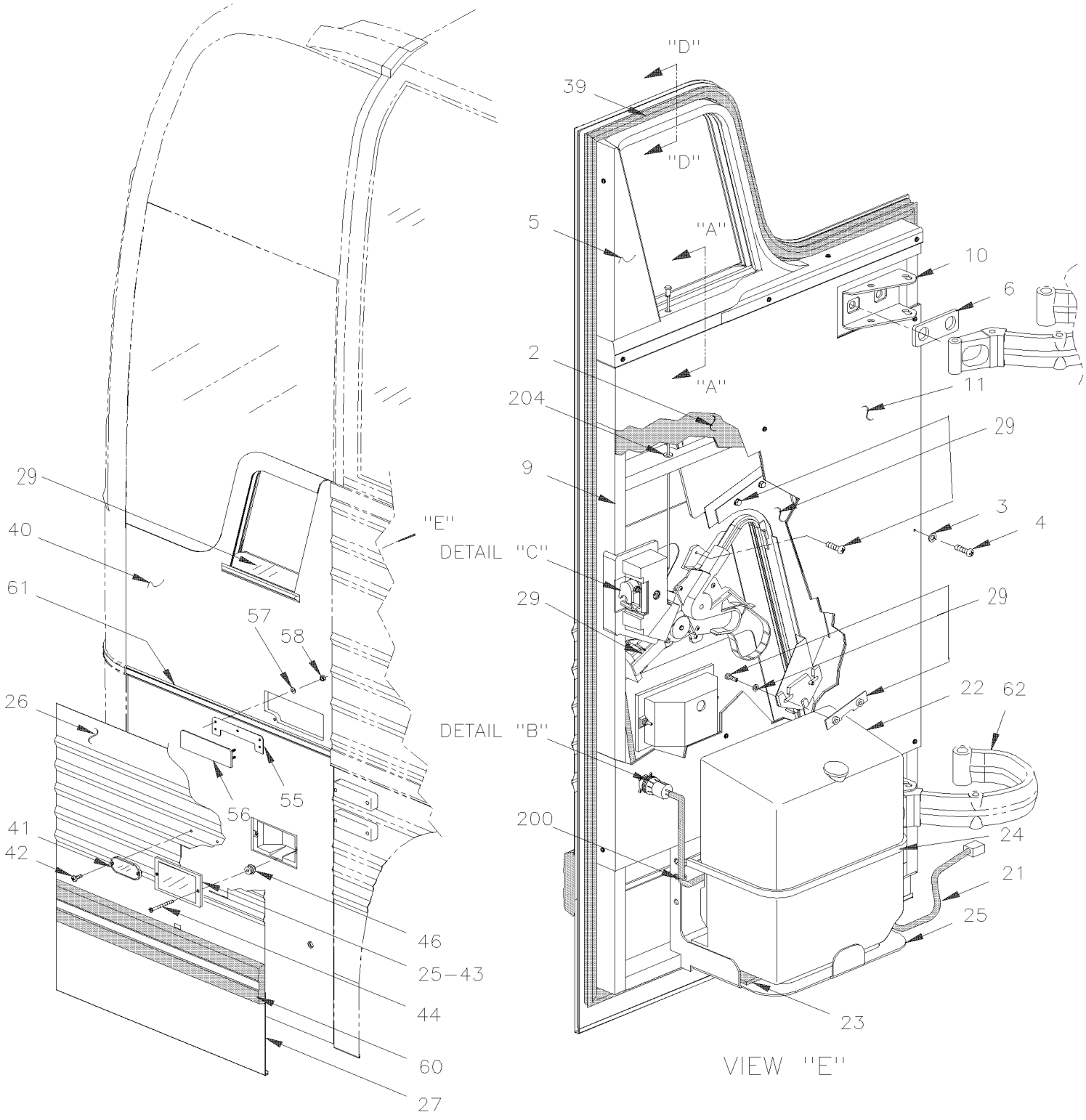

From Y-7046 To 8-9339		Date:07/2024	PAGE:Y2-1879-00
FRONT SERVICE DOOR ASSY			

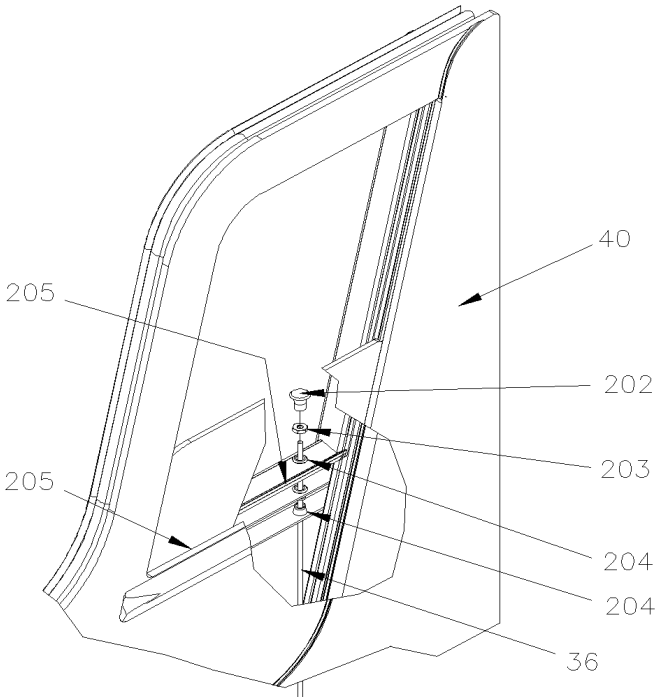

SECTION ''A–A''

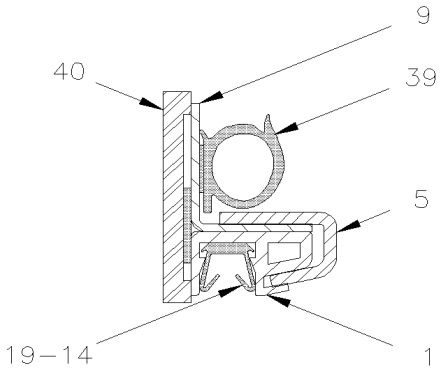

SECTION '' D–D ''

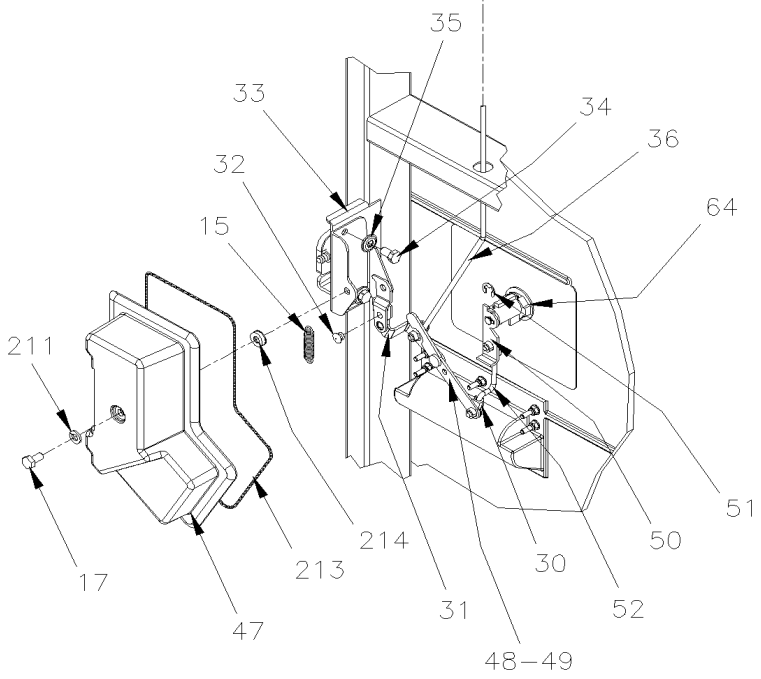

DETAIL ''C''

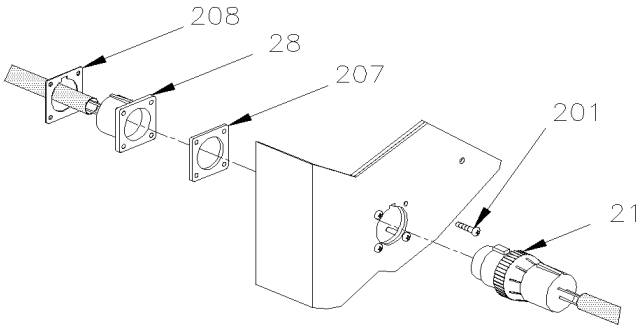

DETAIL ''B''

From Y-7046 To 8-9339		Date:07/2024	PAGE:Y2-1879-00

FRONT SERVICE DOOR ASSY

Item#	Part	Description	XLII 45	XLII MTH40	XLII MTH45	XLII MTH45E	NOTES
		ALL FRONT SERVICE DOORS DO NOT INCLUDE					
		RUB-RAIL PLEASE ORDER SEPARATELY					
	287914P	FRONT SERVICE DOOR ASSY MTH 89"				1	
	286490P	FRONT SERVICE DOOR ASSY MTH 86"		1	1	1	
	285786P	FRONT SERVICE DOOR ASSY MTH 83" To Y-7128		1	1		
	286614P	FRONT SERVICE DOOR ASSY To 6-8906	1				
	287358	FRONT SERVICE DOOR ASSY W/FLUTED PANEL / S.B. To 4-8335	1				A
	287149P	FRONT SERVICE DOOR ASSY W/FLUTED PANEL / S.B. From 4-8336 To 6-8906	1				A
	287359	FRONT SERVICE DOOR ASSY W/FLUTED PANEL / S.B. To 4-8335	1				B
	287162P	FRONT SERVICE DOOR ASSY W/FLUTED PANEL / S.B. From 4-8336 To 6-8906	1				B
1	285983	WINDOW TRACK	1	1	1	1	
2	286601	INSULATING / 86"		1	1	1	
2	286426	INSULATING / 83" To Y-7128		1	1		
2	286606	INSULATING / COACH To 6-8906	1				
2	287906	INSULATING / 89"				1	
3	500463	WASHER FN CKF .187x.500x.090 BR Z050	17	17	17	17	
4	502673	SCREW TC PAN PH #6-32x1/2 SS	2	2	2	2	
5	286491	INTERIOR FINISHING / 86" & 89"		1	1	1	
5	286451	INTERIOR FINISHING / 83"	1	1	1		
6	283402	SUPPORT PLATE		2	2	2	
6	286998	SUPPORT PLATE 134MM X 48MM To 6-8906	1				
7	502731	SCREW CAP HEX M12-1.75x40 G8.8 Z050	4	4	4	4	
8	500810	WASHER LO SPT 12.2x21.1x2.5 Z050	4	4	4	4	
9	286605P	DOOR FRAME ASSY / COACH To 6-8906	1				
9	Call order desk	DOOR FRAME ASSY / 83" To Y-7128		1	1		P
9	286488P	DOOR FRAME ASSY / 86"		1	1	1	
9	287478	DOOR FRAME ASSY / 89"				1	
10	286014	HINGE SUPPORT	2	2	2	2	
11	286607	INTERIOR PANEL / COACH To 6-8906	1				
11	287890	INTERIOR PANEL / COACH To 6-8906	1				B F
11	286425	INTERIOR PANEL / 83" To Y-7128		1	1		
11	286602	INTERIOR PANEL / 86"		1	1	1	
11	287905	INTERIOR PANEL / 89"				1	
NS	506790	TAPE RUB ADH2 CC POL 1/16" x 1/2" x 200' / BLACK I1C-N-A	4	4	4	4	
13	5001182	NUT HEX NYRT M6-1.0 SS	4	4	4	4	
13	502570	WASHER LO SPT 6.1x11.8x1.6 SS	2	2	2	2	
14	286440	FELT SLIDING 677MM	1	1	1	1	
15	284914	SPRING EXTENSION / .305 O.D. x 1.562 x .051	1	1	1	1	
16	286087	DIAGONNAL SUPPORT To 6-8901	1	1	1	1	
17	5001433	SCREW CAP HEX M6-1.0x25 SS	1	1	1	1	

From Y-7046 To 8-9339		Date:07/2024	PAGE:Y2-1879-00

FRONT SERVICE DOOR ASSY

Item#	Part	Description	XLII 45	XLII MTH40	XLII MTH45	XLII MTH45E	NOTES
19	286439	FELT SLIDING 930MM	1	1	1	1	
21	064828	CABLE ASSY / WINDSHIELD WASHER PUMP To 7-9095	1	1	1	1	
21	066516	CABLE ASSY / WINDSHIELD WASHER PUMP From 7-9096	1	1	1	1	
21	067948	CABLE ASSY / ADAPTOR / NEW LEVEL (SERVICE ONLY)	1	1	1	1	
22	**Y2-2305-20**	**WINDSHIELD WASHER - INSTALLATION**					
23	506339	TAPE RUB ADH1 NIT 1/4" x 1" x 35' / BLACK 1220	1	1	1	1	
24	504694	TIE RUBBER BELT, W/HOOK 21" To Y-7237	2	2	2	2	
24	287097	STRAP RETAINING SS / 330MM x 196MM From Y-7238	1				
24	288919	STRAP RETAINING SS / 330MM x 218MM	1				F
25	286422	SUPPORT / WINDSHIELD WASHER TANK / WELDED TO STRUCTURE	1	1	1	1	
25	288920	SUPPORT / WINDSHIELD WASHER TANK	1				A F
26	286038	PANEL UPPER / S.B. To 5-8468		1	1	1	
26	288525	PANEL UPPER / B.A. From 5-8469		1	1	1	
26	287889	PANEL UPPER / S.B. To 4-8335	1				A
26	281039	PANEL UPPER / S.B. From 4-8336 To 6-8906	1				A
26	287916	PANEL UPPER / S.B. To 4-8335	1				B
26	281038	PANEL UPPER / S.B. From 4-8336 To 6-8906	1				B
27	286130	PANEL LOWER / S.B. To 5-8468		1	1	1	
27	288524	PANEL LOWER / B.A. From 5-8469		1	1	1	
27	287144	PANEL LOWER / S.B. To 6-8906	1				A
28	065005	CABLE ASSY / SERVICE DOOR To 6-8901	1	1	1	1	
28	066626	WIRING HARNESS SERVICE DOOR From 6-8902	1	1	1	1	
29	**Y2-1886-00**	**POWER WINDOW - ELECTRICAL INSTALLATION To 6-8901**					
29	**Y2-1886-01**	**POWER WINDOW - ELECTRICAL INSTALLATION From 6-8902**					
30	504456	CLIP / RETAINER ROD / WHITE OR RED To Y-7237	3	3	3	3	
30	780340	CLIP, RETAINER ROD From Y-7238	3	3	3	3	
31	286040	PIVOT To Y-7237	1	1	1	1	
31	287077	PIVOT From Y-7238	1	1	1	1	
32	504379	RIVET POP DOME OE 3/16x1/4 SS	1	1	1	1	
33	780587	LOCK SPAGNOLET L.H. / W/G-FITTING To 2-7755	1	1	1	1	
. NS	507607	. GREASE FITTING / M6-1.00 To 2-7755	1	1	1	1	
33	780652	LOCK SPAGNOLET L.H. / W/G-FITTING From 2-7756	1	1	1	1	
. NS	780340	. CLIP, RETAINER ROD From 2-7756	1	1	1	1	
. NS	507607	. GREASE FITTING / M6-1.00 From 2-7756	1	1	1	1	
34	502563	SCREW CAP HEX M6-1.0x12 G8.8 Z050	2	2	2	2	
35	502582	WASHER LO SERR 6.1x16.2x0.9 Z050	2	2	2	2	
36	286489	OPENING ROD / 86" To Y-7237		1	1	1	
36	287086	OPENING ROD / 86" From Y-7238		1	1	1	
36	286424	OPENING ROD / 83" To Y-7128		1	1		
36	287085	OPENING ROD / 83"		1	1		
36	286610	OPENING ROD / COACH To Y-7237	1				
36	287084	OPENING ROD / COACH From Y-7238 To 6-8906	1				

From Y-7046 To 8-9339		Date:07/2024	PAGE:Y2-1879-00

FRONT SERVICE DOOR ASSY

Item#	Part	Description	XLII 45	XLII MTH40	XLII MTH45	XLII MTH45E	NOTES
36	287907	OPENING ROD / 89"				1	
39	286071	RUBBER SEAL EXTRUSION / SERVICE DOOR To 5-8650	1				
39	287493	RUBBER SEAL EXTRUSION / SERVICE DOOR From 5-8651 To 6-8906	1				
39	288910	RUBBER SEAL EXTRUSION / SERVICE DOOR	1				
39	2800125	RUBBER SEAL EXTRUSION / SERVICE DOOR	1				
39	286068	RUBBER SEAL EXTRUSION / SERVICE DOOR MTH-83" To Y-7128		1	1		
39	289939	RUBBER SEAL EXTRUSION / SERVICE DOOR MTH-83" To Y-7128		1	1		
39	288940	RUBBER SEAL EXTRUSION / SERVICE DOOR MTH-83" To Y-7128		1	1		
39	2800177	RUBBER SEAL EXTRUSION / SERVICE DOOR MTH-83" To Y-7128		1	1		
39	286070	RUBBER SEAL EXTRUSION / SERVICE DOOR MTH-86" To 5-8650		1	1	1	
39	289999	RUBBER SEAL EXTRUSION / SERVICE DOOR MTH-86" From 5-8651		1	1	1	
39	288943	RUBBER SEAL EXTRUSION / SERVICE DOOR MTH-86"		1	1	1	
39	2800180	RUBBER SEAL EXTRUSION / SERVICE DOOR MTH-86"		1	1	1	
39	286072	RUBBER SEAL EXTRUSION / SERVICE DOOR MTH-89" To 5-8650				1	
39	289930	RUBBER SEAL EXTRUSION / SERVICE DOOR MTH-89" From 5-8651				1	
39	288914	RUBBER SEAL EXTRUSION / SERVICE DOOR MTH-89"				1	
39	2800128	RUBBER SEAL EXTRUSION / SERVICE DOOR MTH-89"				1	
40	286073	PANEL FIBERGLASS / 86"		1	1	1	
40	286037	PANEL FIBERGLASS / 83" To Y-7128		1	1		
40	286074	PANEL FIBERGLASS / COACH To 4-8335	1				
40	281020	PANEL FIBERGLASS / COACH From 4-8336 To 6-8906	1				
40	289896	PANEL FIBERGLASS / COACH To 4-8335	1				A
40	281034	PANEL FIBERGLASS / COACH From 4-8336	1				A
40	288627	PANEL FIBERGLASS / COACH	1				F
40	287164	PANEL FIBERGLASS / COACH To 4-8335	1				B
40	281035	PANEL FIBERGLASS / COACH From 4-8336 To 6-8906	1				B
40	286075	PANEL FIBERGLASS / 89"				1	
41	930212	REFLECTOR AMBER 1 1/8" x 4 3/8"	1	1	1	1	
42	500124	SCREW TP TR PH #8x1/2 SS	2	2	2	2	
43	286400	BEZEL	1	1	1	1	
44	502530	SCREW MA OV PH M4-0.7x40 SS	2	2	2	2	
45	504473	RIVET POP DOME OE 1/8x1/4 SS	2	2	2	2	
46	500589	NUT WELL M4-0.7x13.5	2	2	2	2	
47	286456	LOCK CAP	1	1	1	1	
48	504542	RIVET SHR FL 9/32x3/32 STL	1	1	1	1	
49	287073	ROD	1	1	1	1	
50	286705	LOCK PIVOT To Y-7237	1	1	1	1	
50	287087	PIVOT From Y-7238	1	1	1	1	
51	504402	RING RETAINER / EXT .250 x .210 x .025"	1	1	1	1	
52	286713	ROD ASSY To Y-7237	1	1	1	1	
52	286714	WASHER To Y-7237	1	1	1	1	
52	502094	PIN, COTTER 1/16 x 1/2 SS To Y-7237	1	1	1	1	

From Y-7046 To 8-9339		Date:07/2024	PAGE:Y2-1879-00

FRONT SERVICE DOOR ASSY

Item#	Part	Description	XLII 45	XLII MTH40	XLII MTH45	XLII MTH45E	NOTES
52	286709	ROD From Y-7238	1	1	1	1	
55	283956	HANDLE ASSY / W/5 STUDS From 4-8336 To 6-8906	1				
56	283954	GASKET / HANDLE & BODY From 4-8336 To 6-8906	1				
57	502656	SCREW CAP HEX M6-1.0x50 SS From 4-8336 To 6-8906	5				
58	502557	NUT HEX NYRT M4-0.7 SS From 4-8336 To 6-8906	5				
60	**Y2-1855-00**	**RUB RAIL - EXTERIOR CREST & TRIMS**					
61	286084	FINISHING MOULDING SS 800MM / S.B. To 5-8468		1	1	1	
61	288522	FINISHING MOULDING 800MM / B.A. From 5-8469		1	1	1	
61	287146	FINISHING MOULDING 800MM To 6-8906	1				A
NS	681051	TAPE RUB ADH2 URE .045" x 1/2" x 108' / WHITE 4085	AR	AR	AR	AR	A
NS	682462	ADHESIVE SIKA #252 / BLACK / 310ml CARTRIDGE	AR	AR	AR	AR	A
62	**Y2-1879-10**	**FRONT SERVICE DOOR - INSTALLATION**					
64	**Y2-1867-00**	**KEY & CYLINDER CODE "FORD" & "NS"**					
200	504637	CABLE TIE / 3/16" x 13"	2	2	2	2	
201	5001454	SCREW MA BDG PH #4-40x1/2 SS	4	4	4	4	
202	505504	KNOB, PULL / 8-32	1	1	1	1	
203	500764	NUT HEX #8-32 Z050	1	1	1	1	
204	504083	SNAP BUSHING / .250x.468.406	3	3	3	3	
NS	509808	HOLE PLUG BUTTON / .375 O.D. BLACK To 6-8906	1				C
205	286419	FLAP SEAL / 25MM x 260MM	2	2	2	2	
206	506866	FLAP SEAL 3/4" x 7/8" / PVC / C.T.L. / RAW MATERIAL	AR	AR	AR	AR	
NS	680030	ADHESIVE ADCHEM #EC847 / 1 Liter	AR	AR	AR	AR	
207	562946	GASKET MOUNTING / HD10 SERIES / 5C / DEUTSCH HD10-5-GKT	1	1	1	1	
208	561820	NUT, RING #13 / 1.125" I.D. W/4 4-40	1	1	1	1	
211	502570	WASHER LO SPT 6.1x11.8x1.6 SS	1	1	1	1	
213	506002	TAPE RUB ADH1 CC POL 3/16" x 1/2" x 40' / GREY 2520	AR	AR	AR	AR	
214	504399	WASHER RETAINER SNAP CAP #10	1	1	1	1	
300	683083	ADHESIVE SIKA #252 / BLACK / 600 ml SAUSAGE	AR	AR	AR	AR	
301	683097	CLEANER SIKA #205 / CLEAR / 1000ml	AR	AR	AR	AR	
302	683446	PRIMER SIKA #206 / BLACK / 1000ml	AR	AR	AR	AR	
303	683084	SEALANT SIKA #221 / GREY / 600 ml SAUSAGE	AR	AR	AR	AR	
304	683885	ADHESIVE SIKA TACK ULTRA FAST 2 / BLACK / 325ml	2	2	2	2	
		A) USE WITH BUS WITH FLUTED LOWER PANELLING WITH DOCKING LIGHT					
		B) USE WITH BUS WITH FLUTED LOWER PANELLING W/OUT DOCKING LIGHT					
		C) COACH W/OUT ROD OPENING SYSTEM					
		F) USE WITH BUS WITH FLAT LOWER PANELLING WITH DOCKING LIGHT					
		P) CALL ORDER DESK FOR SPECIFIC APPLICATION (V.I.N.)					

From Y-7046 To 8-9339		Date:07/2024	PAGE:Y2-1879-10
FRONT SERVICE DOOR - INSTALLATION			

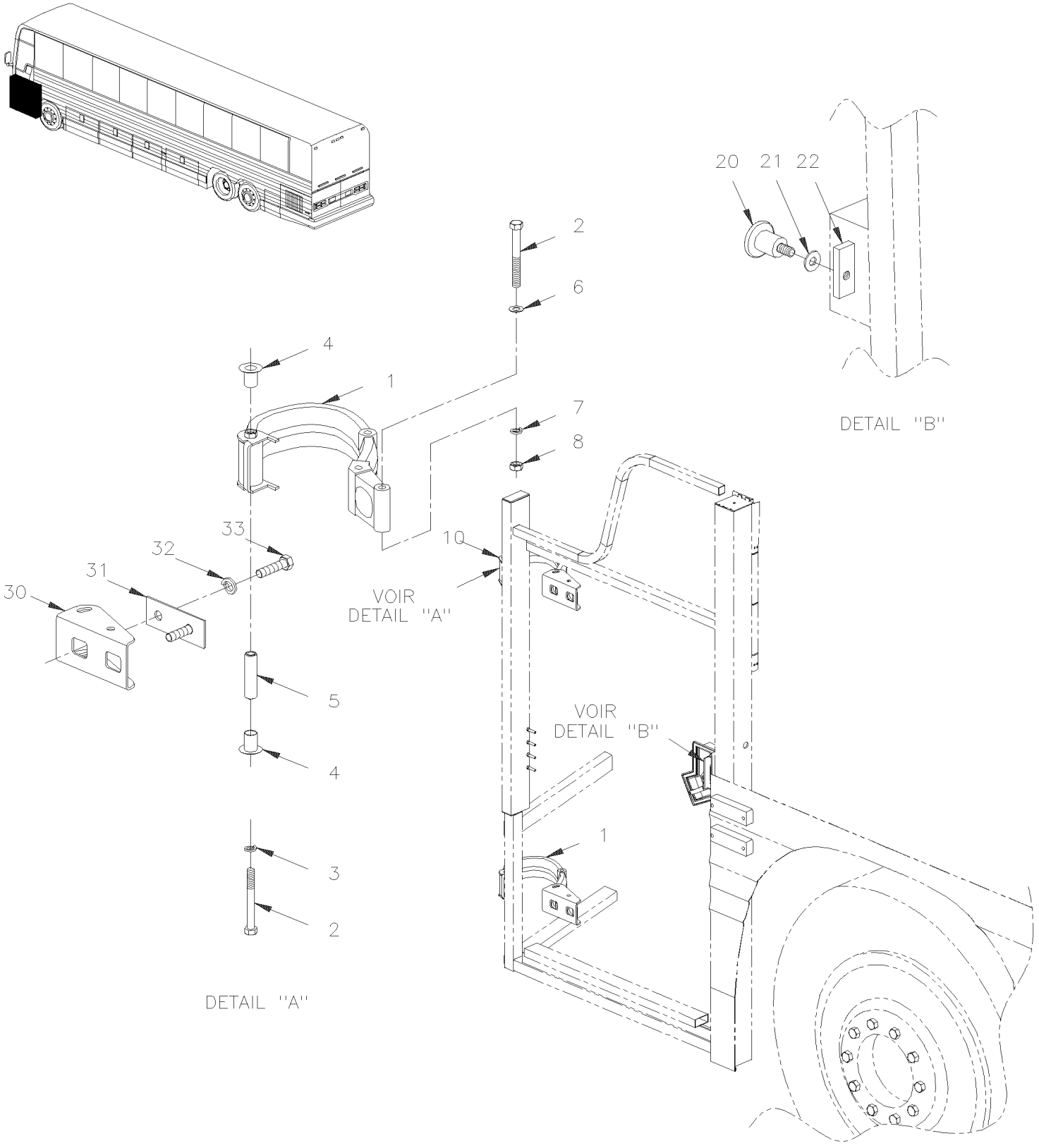

From Y-7046 To 8-9339		Date:07/2024	PAGE:Y2-1879-10

FRONT SERVICE DOOR - INSTALLATION

Item#	Part	Description	XLII 45	XLII MTH40	XLII MTH45	XLII MTH45E	NOTES
1	286477	HINGE To 2-7815	2	2	2	2	
1	287341	HINGE From 2-7816	2	2	2	2	
2	5001016	SCREW CAP HEX M10-1.5x90 G8.8 Z050	4	4	4	4	
3	500257	WASHER LO SPT 10.2x18.1x2.2 Z050	2	2	2	2	
4	507326	BEARING FLANGE	2	2	2	2	
5	284285	SPACER / BEARING FLANGE To 2-7815	1	1	1	1	
5	287337	SPACER / BEARING FLANGE From 2-7816	1	1	1	1	
6	500445	WASHER FL .437x1.000x.083 Z050	4	4	4	4	
7	502585	WASHER LO SERR 10.2x26.3x1.4 ZP	4	4	4	4	
8	500256	NUT HEX M10-1.5 Z050	4	4	4	4	
10	251186	STOPPER SERVICE DOOR	1	1	1	1	
NS	502622	SCREW CAP HEX M6-1.0x20 SS BK	2	2	2	2	
NS	502570	WASHER LO SPT 6.1x11.8x1.6 SS	2	2	2	2	
20	284438	PIN STRIKER	1	1	1	1	
21	284447	WASHERS BELLEVILLE	1	1	1	1	
30	286014	HINGE SUPPORT	2	2	2	2	
31	283402	SUPPORT PLATE	2	2	2	2	
32	500810	WASHER LO SPT 12.2x21.1x2.5 Z050	4	4	4	4	
33	502731	SCREW CAP HEX M12-1.75x40 G8.8 Z050	4	4	4	4	

From Y-7046 To 3-8164		Date:07/2024	PAGE:Y2-1879-50
REAR SERVICE DOOR - L.H. SIDE			

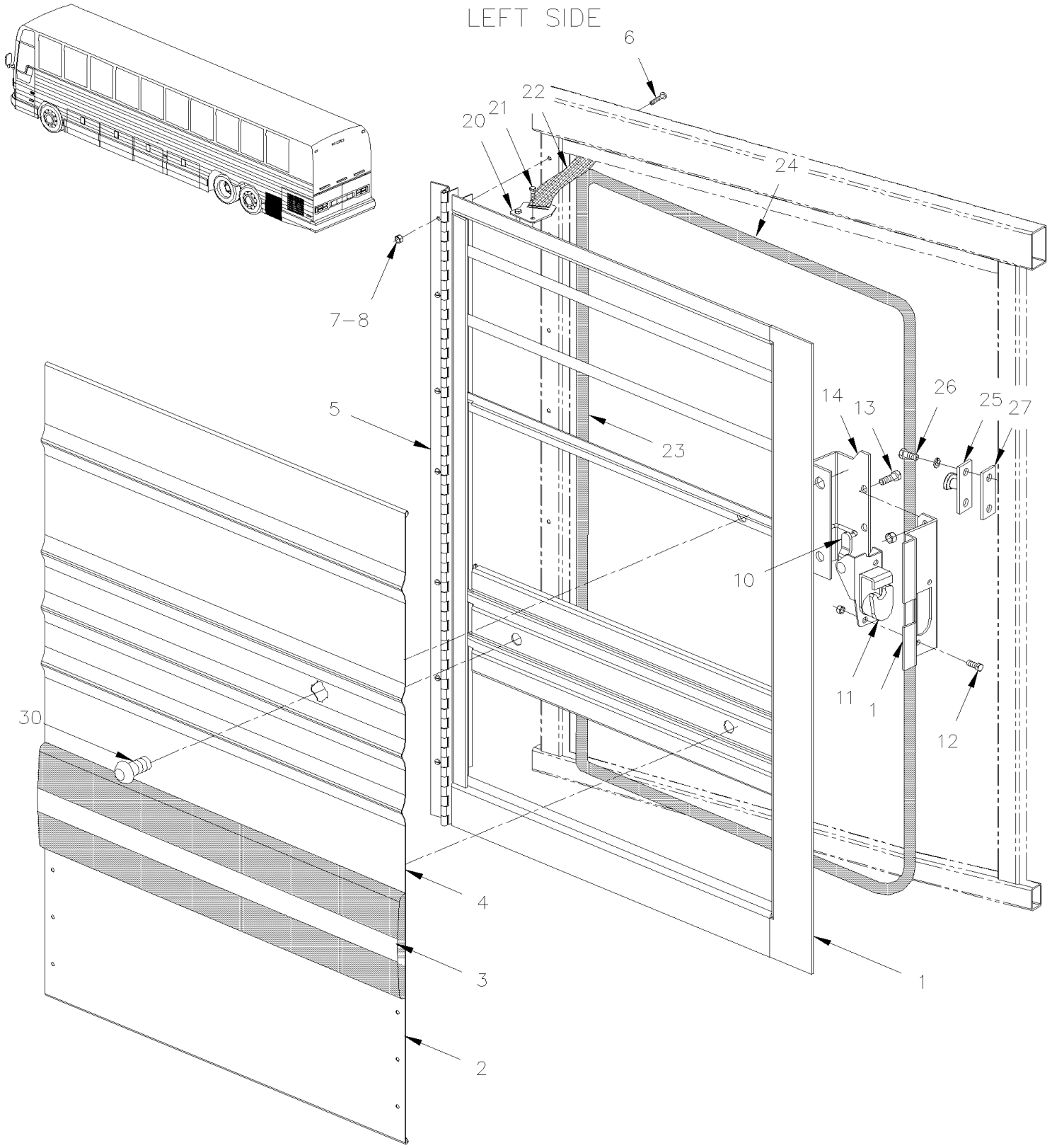

From Y-7046 To 3-8164		Date:07/2024	PAGE:Y2-1879-50

REAR SERVICE DOOR - L.H. SIDE

Item#	Part	Description	XLII 45	XLII MTH40	XLII MTH45	XLII MTH45E	NOTES
		ALL SERVICE DOORS LH ASSY DO NOT INCLUDE					
		RUB-RAIL PLEASE ORDER SEPARATELY					
		THE FOLLOWING DOORS ARE STANDARD WITH					
		PANEL W/O PERFORATED PANELS.					
		FOR SPECIAL PURPOSE DOOR ASSY REFER TO					
		PERFORATED & SPECIAL PANELS (BOOK PA-1108)					
	286633P	REAR SERVICE DOOR ASSY L.H / W/FLAT PANEL	1				
	287345	REAR SERVICE DOOR ASSY L.H / W/FLUTED PANEL / S.B.	1		1		A
1	286125	. FRAME ASSY L.H.	1		1		
2	473885	. LOWER PANEL SERVICE DOOR / S.B.	1		1		
2	473888	. LOWER PANEL SERVICE DOOR W/0.29 SQF / S.B.			AR		
NS	504272	. RIVET CHY Q BRAZ 3/16x1/8 SS	6		6		
3	**Y2-1855-00**	**. RUB RAIL - EXTERIOR CREST & TRIMS**					
4	473890	. UPPER PANEL SERVICE DOOR L.H. W/0.79 SQF / S.B.			AR		
4	473889	. UPPER PANEL SERVICE DOOR L.H. / FLAT / S.B.	AR		AR		A
4	474207	. UPPER PANEL SERVICE DOOR L.H. / FLAT	1				
5	286152	. HINGE ASSY	1		1		
6	500148	. SCREW MA RND PH #6-32x1/2 SS	8		8		
7	500689	. NUT HEX #6-32 Z050	8		8		
NS	500470	. WASHER LO SPT .193x.334x.047 Z050	8		8		
8	284529	. ROD, 1 1/4" C/C / W/L.H. DOOR	1		1		
10	284531	. PIVOT LOCK ROD	1		1		
11	780588	. LOCK SPAGNOLET R.H. / W/G-FITTING To 2-7755	1		1		
. NS	780340	. . CLIP, RETAINER ROD To 2-7755	1		1		
. NS	507607	. . GREASE FITTING / M6-1.00 To 2-7755	1		1		
11	780653	. LOCK SPAGNOLET R.H. / W/G-FITTING From 2-7756	1		1		
. NS	780340	. . CLIP, RETAINER ROD From 2-7756	1		1		
. NS	507607	. . GREASE FITTING / M6-1.00 From 2-7756	1		1		
12	502531	. SCREW CAP HEX M6-1.0x16 G8.8 Z050	2		2		
NS	502582	. WASHER LO SERR 6.1x16.2x0.9 Z050	2		2		
13	500163	. SCREW CAP HEX 1/4-20x3/4 G5 Z050	3		3		
NS	502583	. WASHER LO SERR 8.15x22.3x1.0 Z050	3		3		
14	284533	. SUPPORT, LOCK SPAGNOLET / W/L.H. DOOR	1		1		
20	284440	SUPPORT	1		1		
21	504379	RIVET POP DOME OE 3/16x1/4 SS	2		2		
22	505507	STRAP NYLON 1" WIDE / S.L.	AR		AR		
NS	284439	PLATE, STRAP RETAINING / OBLONG 16.5MM x 25.4MM W/2 HOLES	1		1		
23	506004	TAPE RUB ADH1 CC POL 3/8" x 1/2" x 20' / GREY 2520X	AR		AR		

From Y-7046 To 3-8164		Date:07/2024	PAGE:Y2-1879-50

REAR SERVICE DOOR - L.H. SIDE

Item#	Part	Description	XLII 45	XLII MTH40	XLII MTH45	XLII MTH45E	NOTES
24	286141	RUBBER SEAL EXTRUSION / REAR SERVICE DOOR	1		1		
24	289941	RUBBER SEAL EXTRUSION / REAR SERVICE DOOR	1		1		
24	288942	RUBBER SEAL EXTRUSION / REAR SERVICE DOOR	1		1		
24	2800179	RUBBER SEAL EXTRUSION / REAR SERVICE DOOR	1		1		
25	780278	PIN, STRIKER STUD	1		1		
26	500316	SCREW MA FL PH 1/4-28x3/4 SS	2		2		
27	283326	STRIKER PLATE, MOUNTING / 60MM X 25MM	1		1		
30	**Y2-1867-00**	**KEY & CYLINDER CODE "FORD" & "NS"**					
		A) ALSO USE WITH COACH WITH FLUTED LOWER PANELLING					

From 4-8165 To 8-9339		Date:07/2024	PAGE:Y2-1879-51
REAR SERVICE DOOR - L.H. SIDE			

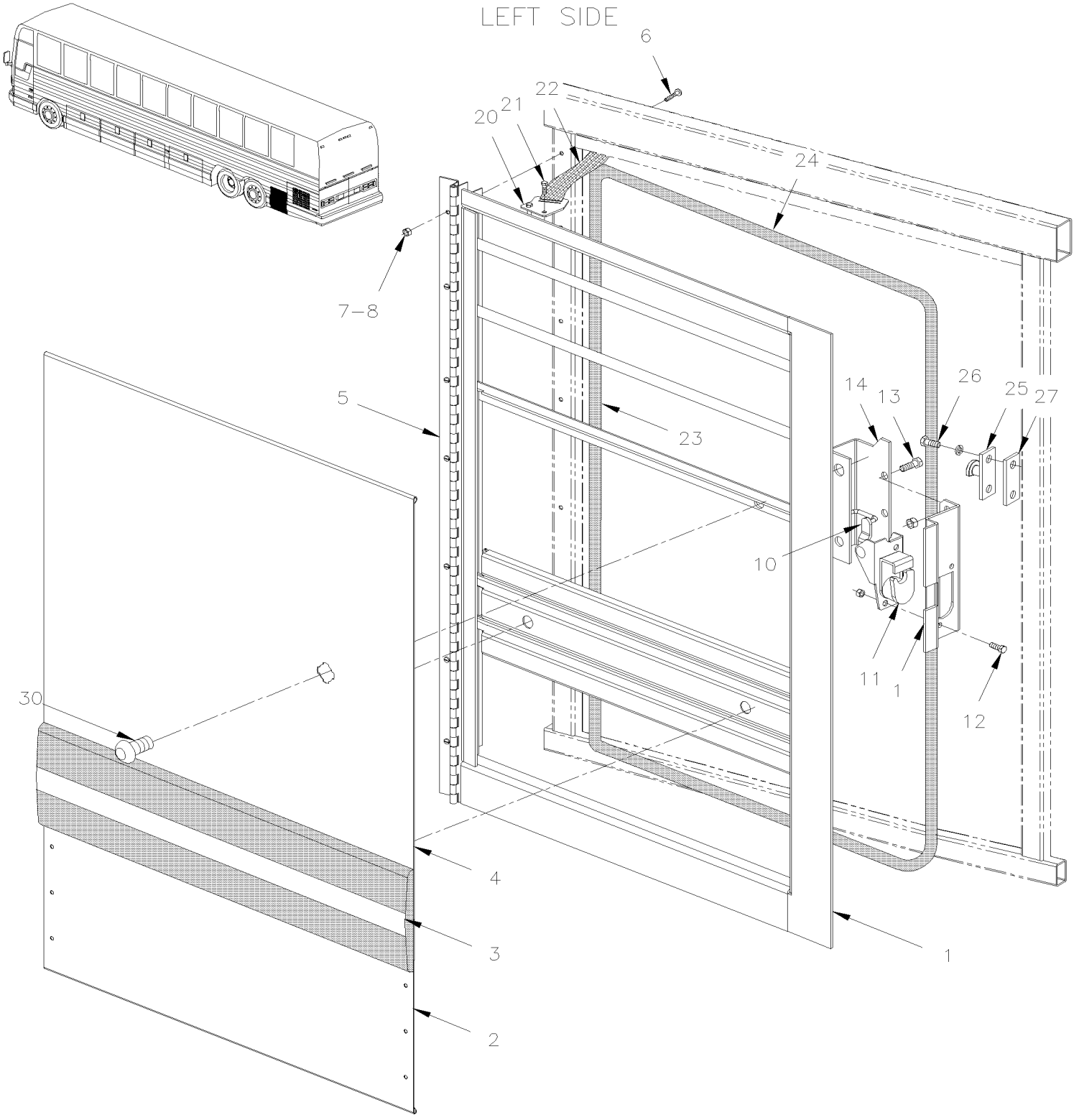

From 4-8165 To 8-9339		Date:07/2024	PAGE:Y2-1879-51

REAR SERVICE DOOR - L.H. SIDE

Item#	Part	Description	XLII 45	XLII MTH40	XLII MTH45	XLII MTH45E	NOTES
	286633P	REAR SERVICE DOOR ASSY L.H / W/FLAT PANEL	1				
	287345	REAR SERVICE DOOR ASSY L.H / W/FLUTED PANEL / S.B.	1				A
1	286125	. FRAME ASSY L.H. To 4-8273	1				
1	289287	. FRAME ASSY L.H. From 4-8274	1				
2	473885	. LOWER PANEL SERVICE DOOR / S.B.	1				
NS	504272	. RIVET CHY Q BRAZ 3/16x1/8 SS	6				
3	**Y2-1855-00**	**. RUB RAIL - EXTERIOR CREST & TRIMS**					
4	473889	UPPER PANEL SERVICE DOOR L.H. / FLAT / S.B.	AR				A
4	474207	UPPER PANEL SERVICE DOOR L.H. / FLAT	1				
5	286152	. HINGE ASSY	1				
6	500148	. SCREW MA RND PH #6-32x1/2 SS	8				
7	500689	. NUT HEX #6-32 Z050	8				
8	500470	. WASHER LO SPT .193x.334x.047 Z050	8				
10	284531	. PIVOT LOCK ROD	1				
10	284529	. ROD, 1 1/4" C/C / W/L.H. DOOR	1				
11	780653	. LOCK SPAGNOLET R.H. / W/G-FITTING	1				
. NS	780340	. . CLIP, RETAINER ROD	1				
. NS	507607	. . GREASE FITTING / M6-1.00	1				
12	502531	. SCREW CAP HEX M6-1.0x16 G8.8 Z050	2				
NS	502582	. WASHER LO SERR 6.1x16.2x0.9 Z050	2				
13	500163	. SCREW CAP HEX 1/4-20x3/4 G5 Z050	3				
NS	502583	. WASHER LO SERR 8.15x22.3x1.0 Z050	3				
14	284533	. SUPPORT, LOCK SPAGNOLET / W/L.H. DOOR	1				
20	284440	SUPPORT	1				
21	504379	RIVET POP DOME OE 3/16x1/4 SS	2				
22	505507	STRAP NYLON 1" WIDE / S.L.	AR				
NS	284439	PLATE, STRAP RETAINING / OBLONG 16.5MM x 25.4MM W/2 HOLES	1				
23	506004	TAPE RUB ADH1 CC POL 3/8" x 1/2" x 20' / GREY 2520X	AR				
24	286141	RUBBER SEAL EXTRUSION / REAR SERVICE DOOR To 5-8650	1				
24	289941	RUBBER SEAL EXTRUSION / REAR SERVICE DOOR From 5-8651	1				
24	288942	RUBBER SEAL EXTRUSION / REAR SERVICE DOOR	1				
24	2800179	RUBBER SEAL EXTRUSION / REAR SERVICE DOOR	1				
25	780278	PIN, STRIKER STUD	1				
26	500316	SCREW MA FL PH 1/4-28x3/4 SS	2				
27	283326	STRIKER PLATE, MOUNTING / 60MM X 25MM	1				
30	**Y2-1867-00**	**KEY & CYLINDER CODE "FORD" & "NS"**					
		A) USE WITH COACH WITH FLUTED LOWER PANELLING					

From Y-7046 To 8-9339		Date:07/2024	PAGE:Y2-1879-60
REAR SERVICE DOOR - R.H. SIDE			

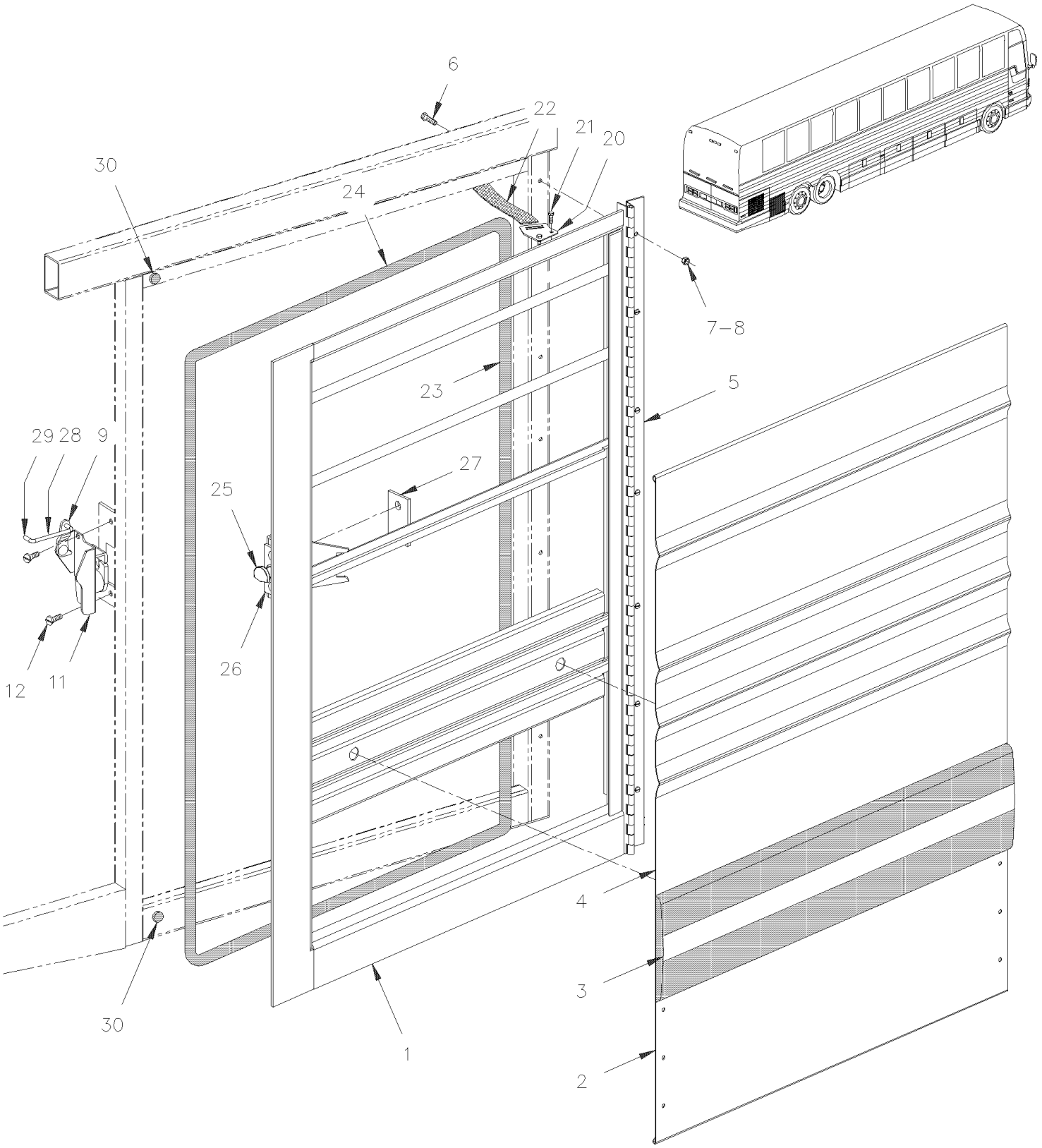

From Y-7046 To 8-9339		Date:07/2024	PAGE:Y2-1879-60

REAR SERVICE DOOR - R.H. SIDE

Item#	Part	Description	XLII 45	XLII MTH40	XLII MTH45	XLII MTH45E	NOTES
		ALL SERVICE DOORS RH ASSY DO NOT INCLUDE					
		RUB-RAIL PLEASE ORDER SEPARATELY					
		THE FOLLOWING DOORS ARE STANDARD WITH					
		PANEL W/O PERFORATED PANELS.					
		FOR SPECIAL PURPOSE DOOR ASSY REFER TO					
		PERFORATED & SPECIAL PANELS (BOOK PA-1108)					
	287360	REAR SERVICE DOOR ASSY R.H To 6-8906	1				C
	287346	REAR SERVICE DOOR ASSY R.H / W/FLAT PANEL To 6-8906	1				
	287320	REAR SERVICE DOOR ASSY R.H / W/FLAT PANEL To 6-8906	1				B
	287347	REAR SERVICE DOOR ASSY R.H To 6-8906	1				A
	287348	REAR SERVICE DOOR ASSY R.H			1		
1	286112	. FRAME ASSY R.H. To 4-8273	1		1		
1	289288	. FRAME ASSY R.H. From 4-8274	1		1		
2	473885	. LOWER PANEL SERVICE DOOR / S.B. To 6-8906	1				A
2	473885	. LOWER PANEL SERVICE DOOR / S.B. To 5-8468			1		A
2	477655	. LOWER PANEL SERVICE DOOR / B.A. From 5-8469			1		
2	473888	. LOWER PANEL SERVICE DOOR W/0.29 SQF / S.B.			1		
NS	504272	. RIVET CHY Q BRAZ 3/16x1/8 SS	6		6		
3	**Y2-1855-00**	**. RUB RAIL - EXTERIOR CREST & TRIMS**					
4	474209	. UPPER PANEL SERVICE DOOR / R.H. FLAT To 6-8906	1				
4	475056	. UPPER PANEL SERVICE DOOR / R.H. FLAT / W/100V OUTLET To 6-8906	1				B
4	473884	. UPPER PANEL SERVICE DOOR R.H. / S.B. To 6-8906	AR				A
4	473884	. UPPER PANEL SERVICE DOOR R.H. / S.B. To 5-8468			1		
4	477656	. UPPER PANEL SERVICE DOOR R.H. / B.A. From 5-8469			1		
4	473887	. UPPER PANEL SERVICE DOOR W/0.84 SQF / S.B. To 5-8468			1		
4	477657	. UPPER PANEL SERVICE DOOR L.H. W/0.79 SQF / B.A. From 5-8469			1		
5	286143	. HINGE ASSY	1		1		
6	500148	. SCREW MA RND PH #6-32x1/2 SS	8		8		
7	500689	. NUT HEX #6-32 Z050	8		8		
8	500470	. WASHER LO SPT .193x.334x.047 Z050	1		1		
9	780340	CLIP, RETAINER ROD	1		1		
11	780282	LOCK SPAGNOLET L.H. To 2-7755	1		1		
11	780587	LOCK SPAGNOLET L.H. / W/G-FITTING From 2-7756 To 9-9095	1		1		
. NS	507607	. GREASE FITTING / M6-1.00 From 2-7756 To 9-9095	1		1		
11	780652	LOCK SPAGNOLET L.H. / W/G-FITTING From 9-9096			1		
. NS	780340	. CLIP, RETAINER ROD From 9-9096			1		
. NS	507607	. GREASE FITTING / M6-1.00 From 9-9096			1		
NS	287256	LEVER PIVOT To 9-9095	1		1		
11	288892	LEVER PIVOT From 9-9096			1		

From Y-7046 To 8-9339		Date:07/2024	PAGE:Y2-1879-60

REAR SERVICE DOOR - R.H. SIDE

Item#	Part	Description	XLII 45	XLII MTH40	XLII MTH45	XLII MTH45E	NOTES
NS	504379	RIVET POP DOME OE 3/16x1/4 SS From 9-9096	1		1		
12	502531	SCREW CAP HEX M6-1.0x16 G8.8 Z050	1		1		
NS	502582	WASHER LO SERR 6.1x16.2x0.9 Z050	2		2		
20	284440	SUPPORT	1		1		
21	504379	RIVET POP DOME OE 3/16x1/4 SS	1		1		
22	505507	STRAP NYLON 1" WIDE / S.L.	1		1		
NS	284439	PLATE, STRAP RETAINING / OBLONG 16.5MM x 25.4MM W/2 HOLES	1		1		
NS	504379	RIVET POP DOME OE 3/16x1/4 SS	2		2		
23	506004	TAPE RUB ADH1 CC POL 3/8" x 1/2" x 20' / GREY 2520X	AR		AR		
24	286141	RUBBER SEAL EXTRUSION / REAR SERVICE DOOR To 5-8650	1		1		
24	289941	RUBBER SEAL EXTRUSION / REAR SERVICE DOOR From 5-8651	1		1		
24	288942	RUBBER SEAL EXTRUSION / REAR SERVICE DOOR	1		1		
24	2800179	RUBBER SEAL EXTRUSION / REAR SERVICE DOOR	1		1		
25	780278	PIN, STRIKER STUD	1		1		
26	500316	SCREW MA FL PH 1/4-28x3/4 SS	1		1		
27	283326	STRIKER PLATE, MOUNTING / 60MM X 25MM	1		1		
28	282683	ROD / W/R.H. DOOR / 72MM C/C To 9-9095	1		1		
28	288824	ROD / W/R.H. DOOR / 290.3MM C/C From 9-9096			1		
29	507331	PROTECTOR CAP / BLACK / .137 I.D. x .500	1		1		
30	504334	BUMPER RUBBER / .625 OD x .406 TH x .156 HOLE	2		2		
		A) ALSO USE WITH COACH WITH FLUTED LOWER PANELLING					
		B) COACH WITH BATTERIES CHARGER 110V OUTLET					
		C) COACH WITH BATTERIES CHARGER 110V OUTLET & FLUTED LOWER PANELLING					

From Y-7046 To 2-7913		Date:07/2024	PAGE:Y2-1880-00
WINDSHIELD & CHANNEL - W/1 LOCK			

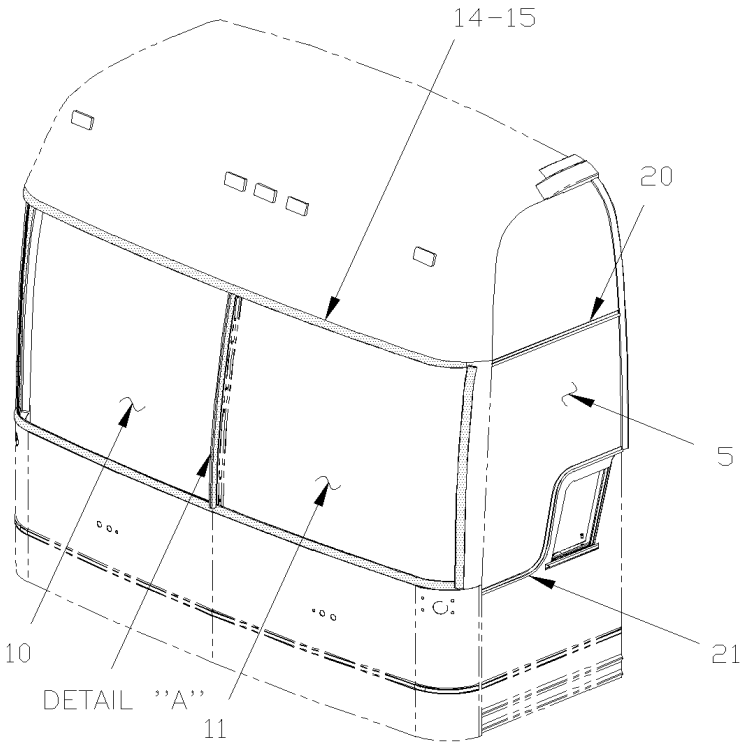

MTH

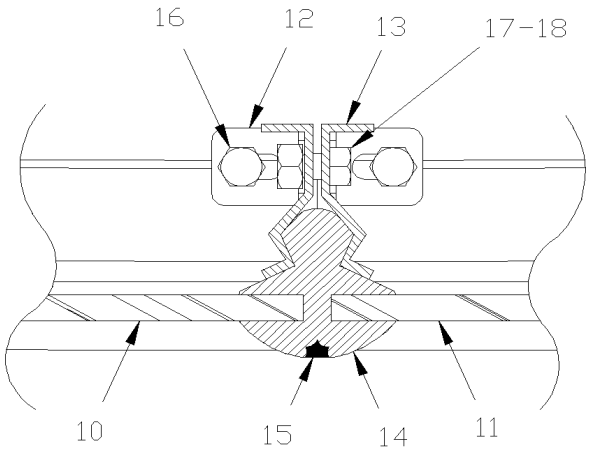

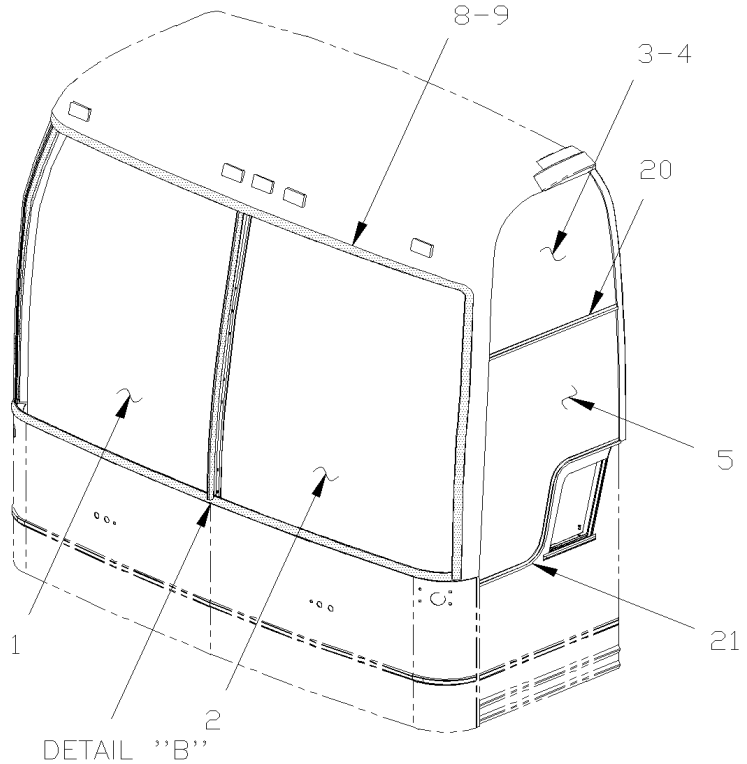

BUS + MTH

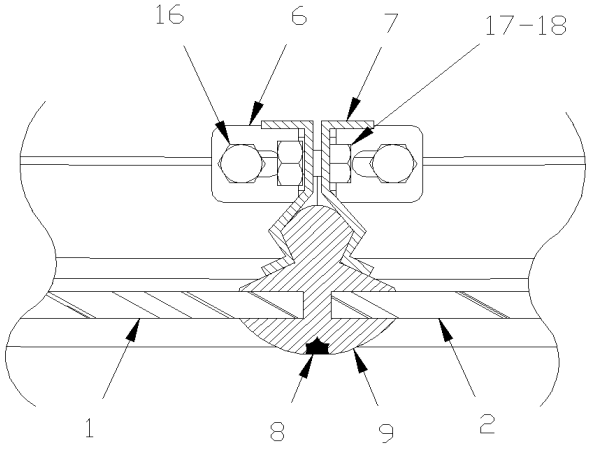

From Y-7046 To 2-7913		Date:07/2024	PAGE:Y2-1880-00

WINDSHIELD & CHANNEL - W/1 LOCK

Item#	Part	Description	XLII 45	XLII MTH40	XLII MTH45	XLII MTH45E	NOTES
1	300386	WINDSHIELD R.H.	1			1	A
1	300393	WINDSHIELD R.H. MTH83" LARGE To Y-7128		1	1		
. NS	293059	. STRIP, LOCKING / S.L. To Y-7128		18FT	18FT		
1	300395	WINDSHIELD R.H. MTH86" LARGE		1	1	1	
. NS	293059	. STRIP, LOCKING / S.L.		18FT	18FT	18FT	
2	300387	WINDSHIELD L.H.	1			1	A
. NS	293059	. STRIP, LOCKING / S.L.	18			18	A
2	300392	WINDSHIELD L.H. MTH83" LARGE To Y-7128		1	1		
. NS	293059	. STRIP, LOCKING / S.L. To Y-7128		18FT	18FT		
2	300394	WINDSHIELD L.H. MTH86" LARGE		1	1	1	
. NS	293059	. STRIP, LOCKING / S.L.		18FT	18FT	18FT	
3	293241	GLASS UPPER L.H. THERMOS	1				
3	293242	GLASS UPPER L.H. SINGLE	1				
3	293260	GLASS UPPER L.H. THERMOS		1	1	1	
3	293258	GLASS UPPER L.H. SINGLE		1	1	1	
4	293240	GLASS UPPER R.H. THERMOS	1				
4	293239	GLASS UPPER R.H. SINGLE	1				
4	293261	GLASS UPPER R.H. THERMOS		1	1	1	
4	293259	GLASS UPPER R.H. SINGLE		1	1	1	
5	293076	GLASS DRIVER`S WINDOW	1	1	1		
5	293081	GLASS DRIVER'S WINDOW / MTH 86" & 89"		1	1	1	
NS	506962	RUB POL 1/4 X 7/16 X 1 LG	AR	AR	AR	AR	
6	293237	POST R.H. WINDSHIELD / WITH LARGE	1	1	1	1	
7	293236	POST L.H. WINDSHIELD / WITH LARGE	1	1	1	1	
8	293059	STRIP, LOCKING / S.L.	AR	AR	AR	AR	
9	293243	WINDSHIELD RUBBER SEAL / WITH LARGE / SINGLE LOCK To 1-7583	1	1	1	1	
. NS	293059	. STRIP, LOCKING / S.L. To 1-7583	31	31	31	31	
9	293394	WINDSHIELD RUBBER SEAL / WITH LARGE / SINGLE LOCK From 1-7584	1	1	1	1	
. NS	293059	. STRIP, LOCKING / S.L. From 1-7584	31	31	31	31	
10	473614	WINDSHIELD R.H. MTH83" SMALL To Y-7128		1	1		
. NS	293059	. STRIP, LOCKING / S.L. To Y-7128		16FT	16FT		
10	300388	WINDSHIELD R.H. MTH86" SMALL To 1-7609		1	1	1	
. NS	293059	. STRIP, LOCKING / S.L. To 1-7609		16	16	16	
11	473613	WINDSHIELD L.H. MTH83" SMALL To Y-7128		1	1		
11	300389	WINDSHIELD L.H. MTH86" SMALL To 1-7609		1	1	1	
12	293058	POST L.H. WINDSHIELD / WITH SMALL		1	1	1	
13	293057	POST R.H. WINDSHIELD / WITH SMALL		1	1	1	
14	292914	WINDSHIELD RUBBER SEAL / WITH SMALL / SINGLE LOCK		1	1	1	
. NS	293059	. STRIP, LOCKING / S.L.		28	28	28	
15	293059	STRIP, LOCKING / S.L.		AR	AR	AR	
16	500948	SCREW TC CAP HEX 1/4-20x1 Z050	4	4	4	4	
17	5001106	SCREW CAP HEX M6-1.0x10 G8.8 Z050	8	8	8	8	

From Y-7046 To 2-7913		Date:07/2024	PAGE:Y2-1880-00

WINDSHIELD & CHANNEL - W/1 LOCK

Item#	Part	Description	XLII 45	XLII MTH40	XLII MTH45	XLII MTH45E	NOTES
18	502570	WASHER LO SPT 6.1x11.8x1.6 SS	8	8	8	8	
20	286454	DRIP MOULDING OVER DRIVER'S WINDOW	1	1	1	1	
20	474082	DRIP MOULDING OVER ENTRANCE DOOR / S.B.	1	1	1	1	
21	286448	DRIP MOULDING "S" BUS & MTH83"	1	1	1		
21	286646	DRIP MOULDING "S" MTH86" & MTH89"		1	1	1	
NS	293842	HANDLE ASSY (TO FIX FRONT GLASS CHANNEL)	1	1	1	1	
. NS	293843	. END TIP "PRÉVOST"	AR	AR	AR	AR	
		A) ALSO USE WITH MTH 89"					

From 2-7914 To 8-9339		Date:07/2024	PAGE:Y2-1880-01
WINDSHIELD & CHANNEL - W/2 LOCK			

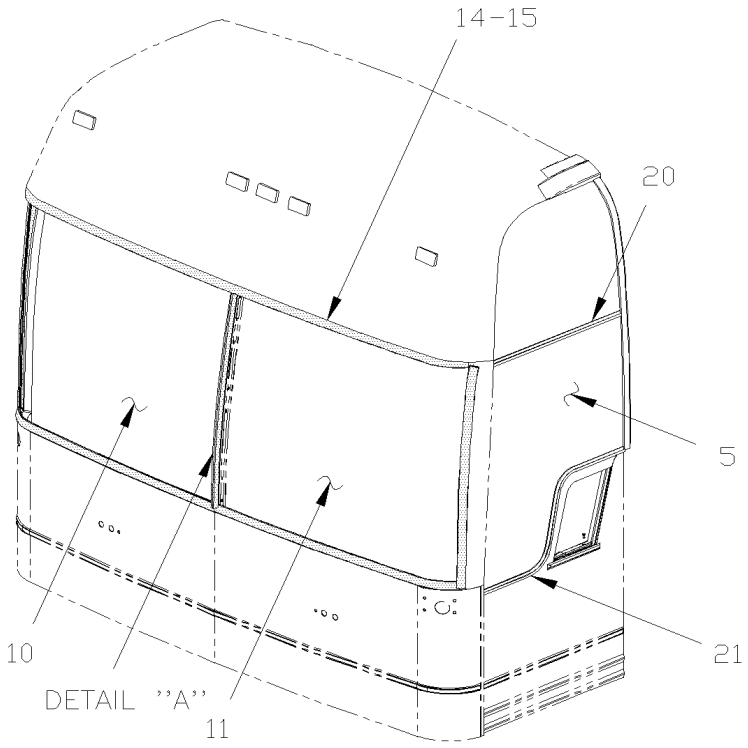

MTH

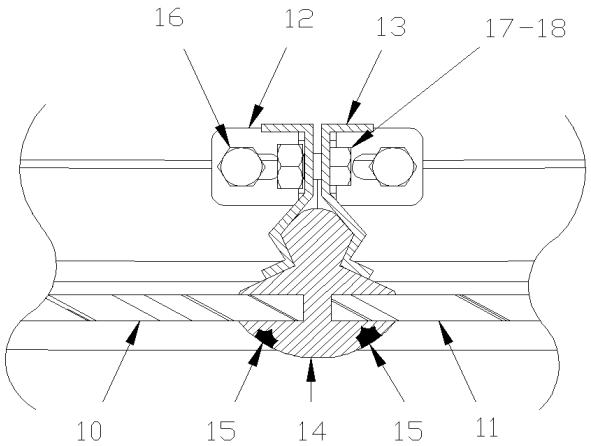

DETAIL ''A''

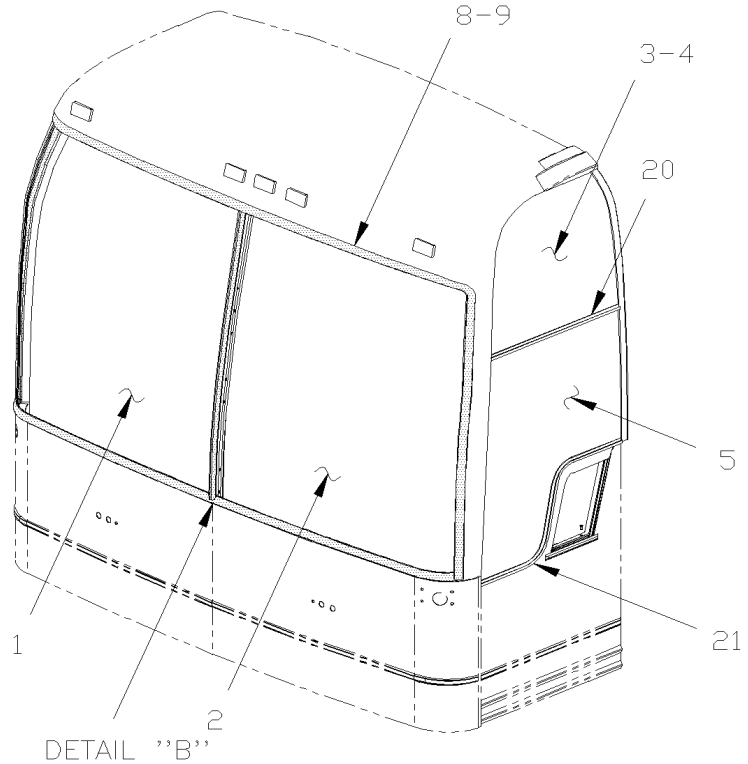

BUS + MTH

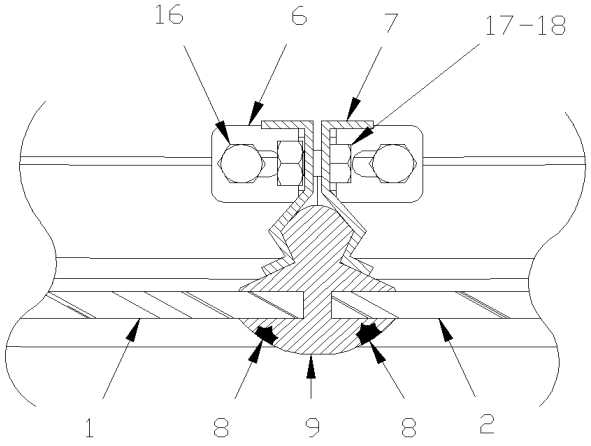

DETAIL ''B''

From 2-7914 To 8-9339		Date:07/2024	PAGE:Y2-1880-01

WINDSHIELD & CHANNEL - W/2 LOCK

Item#	Part	Description	XLII 45	XLII MTH40	XLII MTH45	XLII MTH45E	NOTES
1	300476	WINDSHIELD R.H.	1			1	A
1	300490	WINDSHIELD R.H MTH86" LARGE		1	1		
. NS	293059	. STRIP, LOCKING / S.L.		35FT	35FT		
2	300475	WINDSHIELD L.H.	1			1	A
2	300489	WINDSHIELD L.H MTH86" LARGE		1	1		
3	293241	GLASS UPPER L.H. THERMOS To 6-8906	1				
3	293242	GLASS UPPER L.H. SINGLE To 6-8906	1				
3	293258	GLASS UPPER L.H. SINGLE To 4-8358		1	1	1	
3	293260	GLASS UPPER L.H. THERMOS To 4-8358		1	1	1	
3	293241	GLASS UPPER L.H. THERMOS From 4-8359		1	1	1	
4	293240	GLASS UPPER R.H. THERMOS To 6-8906	1				
4	293239	GLASS UPPER R.H. SINGLE To 6-8906	1				
4	293259	GLASS UPPER R.H. SINGLE To 4-8358		1	1	1	
4	293261	GLASS UPPER R.H. THERMOS To 4-8358		1	1	1	
4	293240	GLASS UPPER R.H. THERMOS From 4-8359		1	1	1	
5	293076	GLASS DRIVER`S WINDOW To 6-8906	1				
5	293081	GLASS DRIVER'S WINDOW / MTH 86" & 89"		1	1	1	
6	293070	POST R.H. WINDSHIELD / WITH LARGE	1	1	1	1	
7	293689	POST L.H. WINDSHIELD / WITH LARGE	1	1	1	1	
8	293059	STRIP, LOCKING / S.L.	AR	AR	AR	AR	
9	293393	WINDSHIELD RUBBER SEAL / WITH LARGE / DOUBLE LOCK	1	1	1	1	
. NS	MI03-22	. SEE MAINTENANCE INFORMATION	1	1	1	1	
10	300491	WINDSHIELD R.H MTH86" SMALL To 4-8167		1	1		
. NS	293059	. STRIP, LOCKING / S.L. To 4-8167		30FT	30FT		
11	300492	WINDSHIELD L.H MTH86" SMALL To 4-8167		1	1		
. NS	293059	. STRIP, LOCKING / S.L. To 4-8167		30FT	30FT		
12	293691	POST L.H. WINDSHIELD / WITH SMALL		1	1		
13	293690	POST R.H. WINDSHIELD / WITH SMALL		1	1		
14	293641	WINDSHIELD RUBBER SEAL / WITH SMALL / DOUBLE LOCK		1	1		
. NS	MI03-22	. SEE MAINTENANCE INFORMATION		1	1		
15	293059	STRIP, LOCKING / S.L.		AR	AR	AR	
16	500948	SCREW TC CAP HEX 1/4-20x1 Z050	4	4	4	4	
17	5001106	SCREW CAP HEX M6-1.0x10 G8.8 Z050	8	8	8	8	
18	502570	WASHER LO SPT 6.1x11.8x1.6 SS	8	8	8	8	
20	286454	DRIP MOULDING OVER DRIVER'S WINDOW	1	1	1	1	
20	474082	DRIP MOULDING OVER ENTRANCE DOOR / S.B. To 5-8468	1	1	1	1	
20	477516	DRIP MOULDING OVER ENTRANCE DOOR / B.A. From 5-8469	1	1	1	1	
21	286448	DRIP MOULDING "S" BUS & MTH83"	1	1	1	1	
NS	293842	HANDLE ASSY (TO FIX FRONT GLASS CHANNEL)	1	1	1	1	
. NS	293843	. END TIP "PRÉVOST"	AR	AR	AR	AR	

From 2-7914 To 8-9339		Date:07/2024	PAGE:Y2-1880-01

WINDSHIELD & CHANNEL - W/2 LOCK

Item#	Part	Description	XLII 45	XLII MTH40	XLII MTH45	XLII MTH45E	NOTES
		A) ALSO USE WITH MTH 89"					

From Y-7046 To 6-8906		Date:07/2024	PAGE:Y2-1884-00
SIDE WINDOW - BUS			

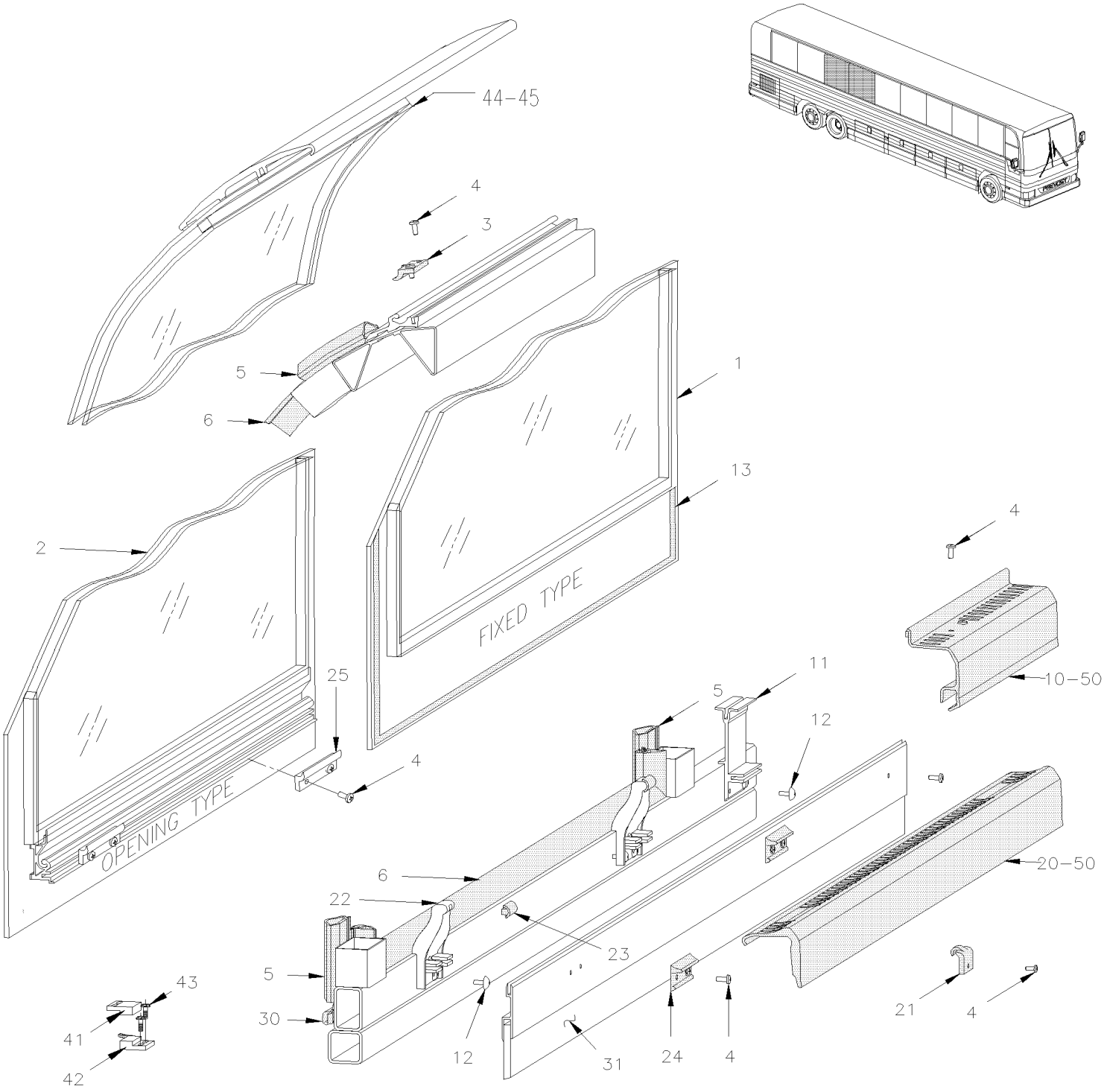

From Y-7046 To 6-8906		Date:07/2024	PAGE:Y2-1884-00

SIDE WINDOW - BUS

Item#	Part	Description	XLII 45	XLII MTH40	XLII MTH45	XLII MTH45E	NOTES
1	293272	GLASS ASSY, SINGLE 13% / FIX TYPE / 1287.4MM To 4-8270	11				
1	293711	GLASS ASSY, SINGLE 13% / FIX TYPE / PRODUCTION ONLY / 1287.4MM From 4-8271 To 4-8320	11				
1	293829	GLASS ASSY, SINGLE 13% / FIX TYPE / SERVICE ONLY / 1287.4MM From 4-8321	11				
1	293274	GLASS ASSY, THERMOS 13% / FIX TYPE / 1287.4MM To 4-8270	11				
1	293706	GLASS ASSY, THERMOS 13% / FIX TYPE / PRODUCTION ONLY / 1287.4MM From 4-8271 To 4-8320	11				
1	297082	GLASS ASSY, THERMOS 13% / FIX TYPE / SERVICE ONLY / 1287.4MM From 4-8321	11				
2	293271	GLASS ASSY, SINGLE 13% / OPEN TYPE / 1287.4MM To 4-8270	7				
2	293710	GLASS ASSY, SINGLE 13% / OPEN TYPE / 1287.4MM From 4-8271 To 4-8320	7				
2	293827	GLASS ASSY, SINGLE 13% / OPEN TYPE / 1287.4MM From 4-8321	7				
2	293273	GLASS ASSY, THERMOS 13% / OPEN TYPE / 1287.4MM To 4-8270	7				
2	293708	GLASS ASSY, THERMOS 13% / OPEN TYPE / 1287.4MM From 4-8271 To 4-8320	7				
2	293828	GLASS ASSY, THERMOS 13% / OPEN TYPE / 1287.4MM From 4-8321	7				
NS	405143	DECAL / BLACK STRIP W/DOTTED 1117MM x 118MM	1				B
NS	405067	DECAL / BLACK STRIP 3 1/2" x 46"	1				B
3	293124	STOPPER BLOCK	4				
3	293125	STOPPER BLOCK SEPARATOR / 2 GLASS	16				
4	500611	SCREW TC PAN PH #10-24x1/2 Z050	94				
5	293250	RUBBER SEAL 1292MM / EACH WINDOW	16				
5	293135	RUBBER SEAL 1315MM / W/83"	2				
NS	507000	TAPE RUB ADH2 POL 3/16" x 1/4" x 50' / BLACK V2206	AR				
6	293488	WINDOW SEAL / WITH OPEN TYPE ONLY / 1249MM X 1219MM	7				
6	294048	KIT, WINDOW RETAINER SEAL INSTALLATION / WITH OPEN TYPE ONLY	7				
. NS	IS-07028	. SEE INSTRUCTION SHEET	1				
6	Call order desk	FRAME W/WINDOW SEAL ASSY / WITH OPEN TYPE ONLY SERVICE	7				P
. NS	293941	. FRAME FIBERGLASS SEAL SUPPORT	1				
. NS	293927	. WINDOW SEAL / WITH OPEN TYPE ONLY 1249MM X 1219MM	1				
. NS	290060	. WINDOW SEAL / WITH OPEN TYPE ONLY 1249MM X 1219MM	1				
. NS	297267	. WINDOW SEAL / WITH OPEN TYPE ONLY 1249MM X 1219MM	1				
. NS	506643	. TAPE RUB ADH1 CC NEO 1/8" x 1/2" x 60' / BLACK 2011	AR				
10	293286	HANDLES FIXE WINDOW W/SINGLE GLASS / 1098MM	10				
10	293285	HANDLES FIXE WINDOW W/THERMOS GLASS / 1098MM	10				
10	293314	HANDLES FIXE WINDOW W/SINGLE GLASS / 227MM	1				
10	293313	HANDLES FIXE WINDOW W/THERMOS GLASS / 227MM	1				
10	293388	HANDLES FIXE WINDOW W/SINGLE GLASS / W.C.L. SEAT LOCATION / 1098MM	1				
10	293387	HANDLES FIXE WINDOW W/THERMOS GLASS / 1098MM / P.W.T.	1				
11	293276	SUPPORT MOULDING	21				
12	504249	RIVET CHY Q PRDG 3/16x3/8 SS	84				
13	683447	ADHESIVE SIKATACK PLUS / BLACK / 23 Liters	AR				
13	683448	ACCELERATOR SIKA / 600ml SAUSAGE	AR				
13	683097	CLEANER SIKA #205 / CLEAR / 1000ml	AR				
13	683446	PRIMER SIKA #206 / BLACK / 1000ml	AR				
13	684685	ADHESIVE SIMSON #ISR 70-03 / 310ml CARTRIDGE	AR				

From Y-7046 To 6-8906		Date:07/2024	PAGE:Y2-1884-00

SIDE WINDOW - BUS

Item#	Part	Description	XLII 45	XLII MTH40	XLII MTH45	XLII MTH45E	NOTES
13	683083	ADHESIVE SIKA #252 / BLACK / 600 ml SAUSAGE	AR				
20	293284	HANDLE WINDOW OPENING 1098MM	7				
21	293353	SUPPORT "J" FORM / ALLUMINUM	14				
21	791007	SUPPORT W/STOPPER (ONE PIECE) SERVICE	14				
22	293235	SUPPORT	14				
23	292837	CUSHION 2.0MM TH / BLACK PLASTIC	14				
23	298215	CUSHION / BLACK PLASTIC / 1.5MM TH	AR				
23	298225	CUSHION / BLACK PLASTIC / 2.5MM TH	AR				
23	680066	ADHESIVE / ADBOND #5014 / 23.6ML BOTTLE	AR				
24	293299	PROTECTOR	14				
25	293124	STOPPER BLOCK	14				
25	791007	SUPPORT W/STOPPER (ONE PIECE) SERVICE	14				
30	293281	RUBBER SEAL EXTRUSION / ADHESIVE / LOWER WINDOW	AR				
31	**Y2-1833-00**	**WINDOW FINISHING CAP & WALL**					
41	064679	MAGNET SENSOR ASSY W/TAPE DUAL LOCK	7				
42	064678	SWITCH MAGNETIC ASSY W/TAPE DUAL LOCK	7				
NS	293345	SUPPORT / SWITCH MAGNETIC	7				
43	504248	RIVET CHY Q PRDG 3/16x1/4 SS	14				
44	293647	INSILATING STRIP ASSY / ALUMINUM "OPTION"	7				O
45	5060037	TAPE RUB ADH1 CC POL 1/4" x 1/2" x 35' / BLACK H1C	AR				O
50	**Y2-1829-00**	**ACCESSORIES PASSENGER'S SEAT - "PREVOST"**					
		B) THIS ITEM IS LOCATED ON SIDE WINDOW FORWARD W.C.L. DOOR					
		O) "OPTION" UPPER WINDOW					
		P) CALL ORDER DESK FOR SPECIFIC APPLICATION (V.I.N.)					

From Y-7046 To 8-9339		Date:07/2024	PAGE:Y2-1884-50
SIDE WINDOW - MTH			

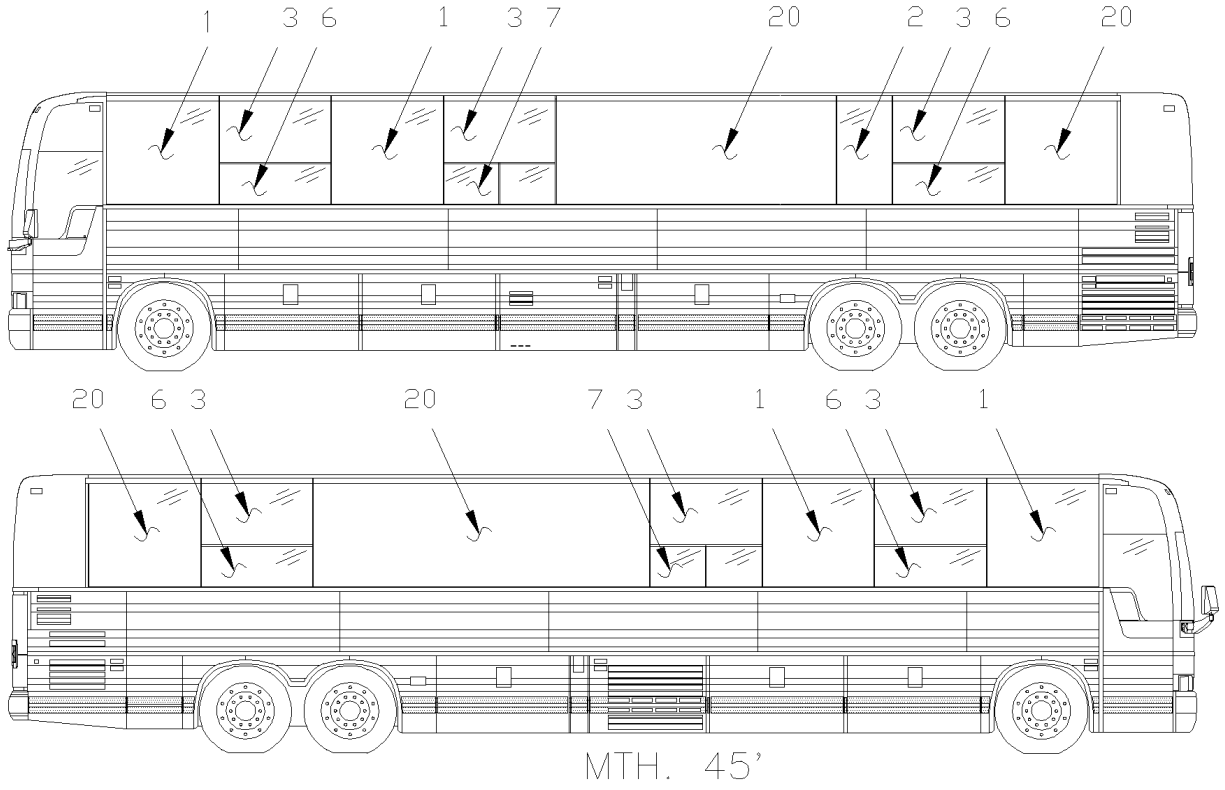

MTH. 45'

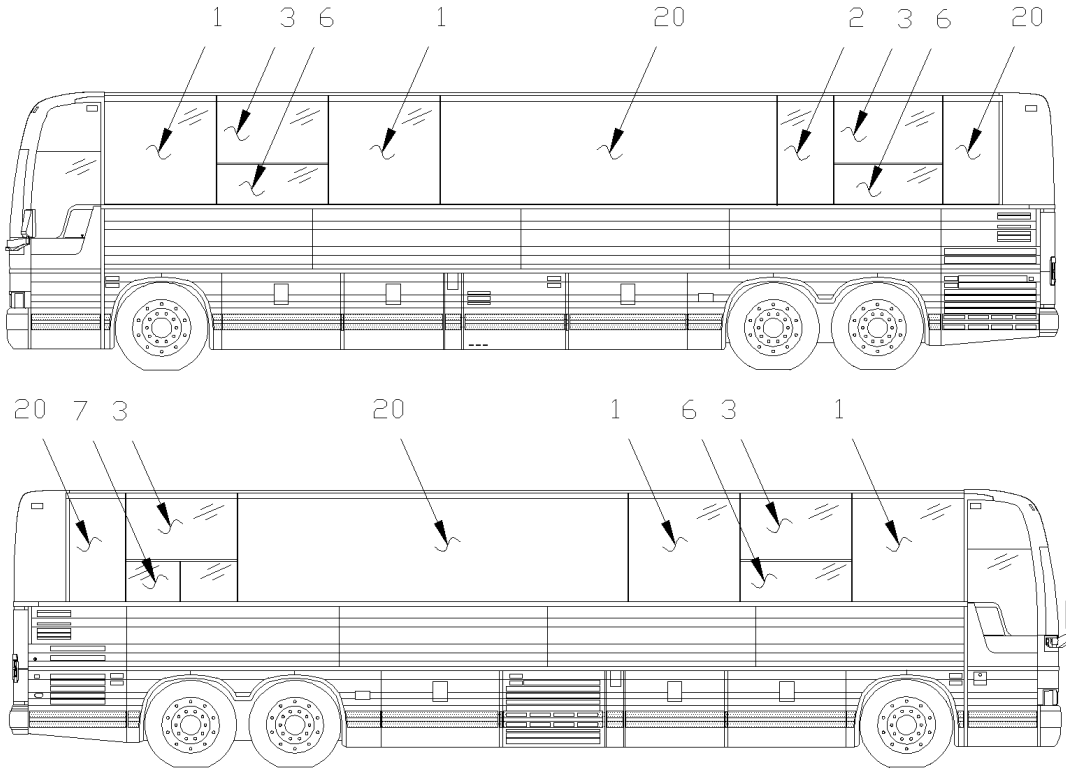

MTH. 40'

From Y-7046 To 8-9339		Date:07/2024	PAGE:Y2-1884-50
SIDE WINDOW - MTH			

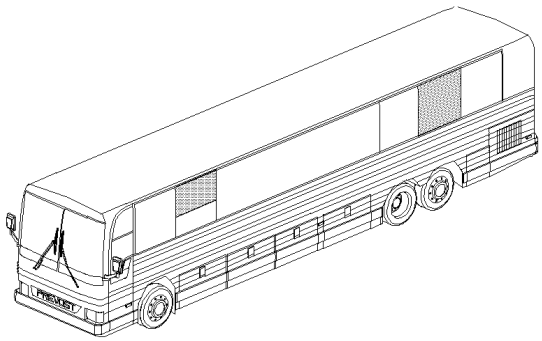

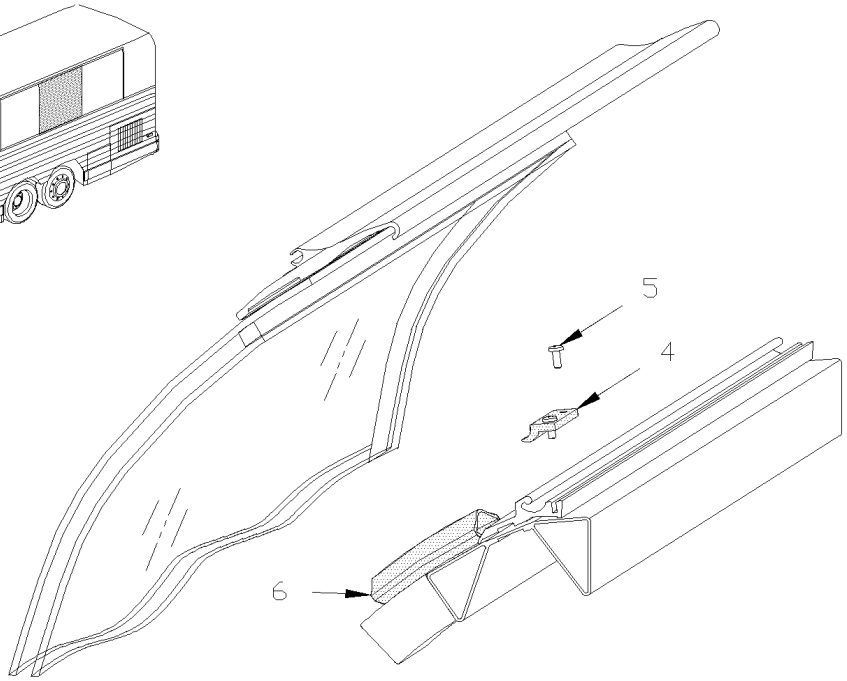

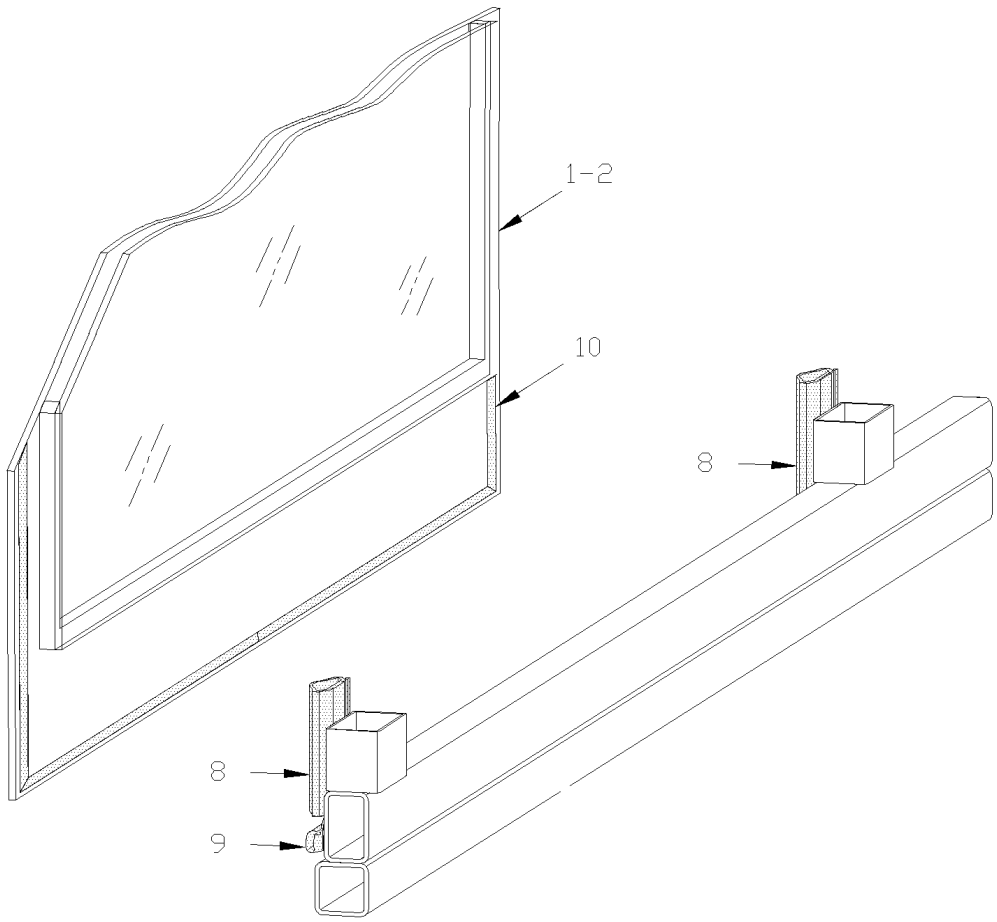

From Y-7046 To 8-9339		Date:07/2024	PAGE:Y2-1884-50
SIDE WINDOW - MTH			

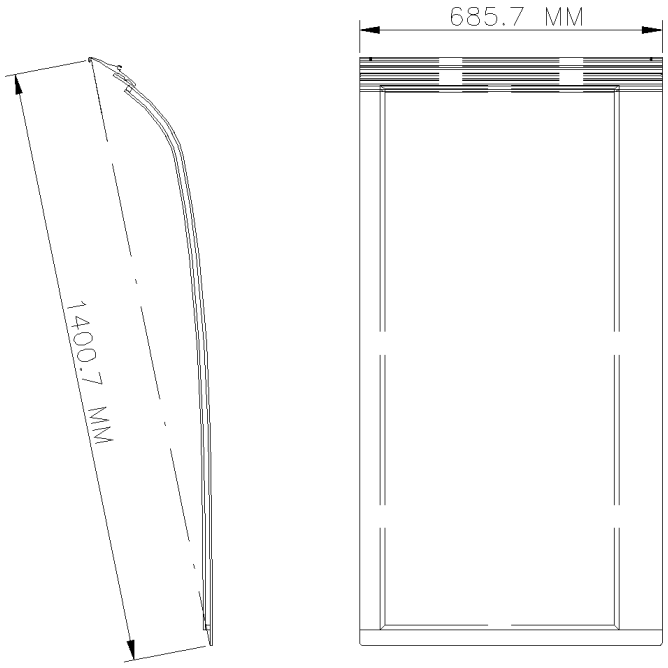

690038

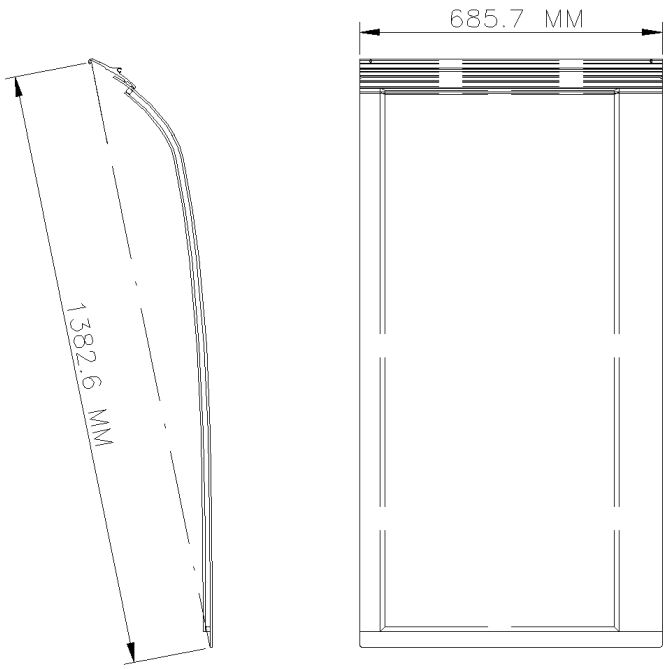

293736

From Y-7046 To 8-9339		Date:07/2024	PAGE:Y2-1884-50
SIDE WINDOW - MTH			

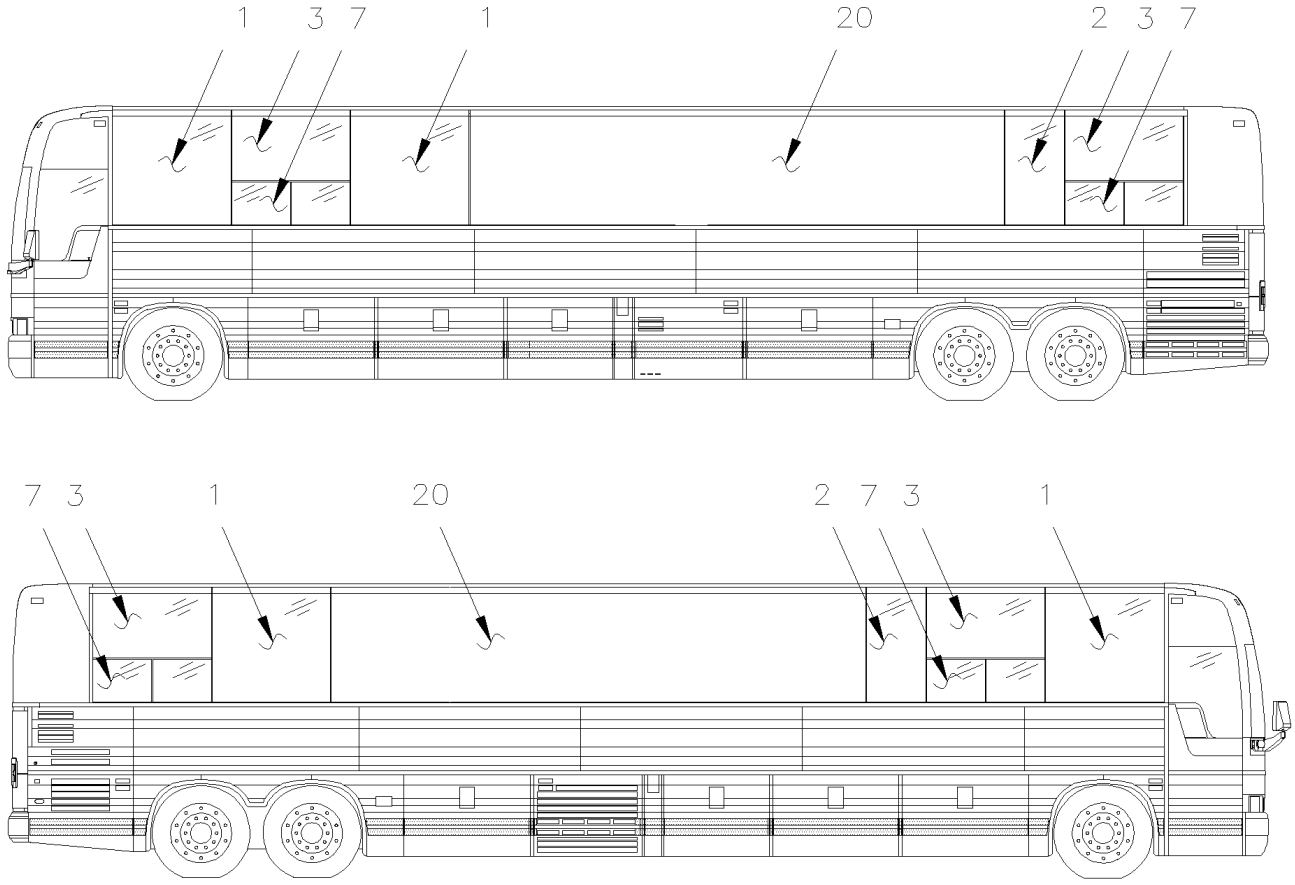

MTH 45' ENT.

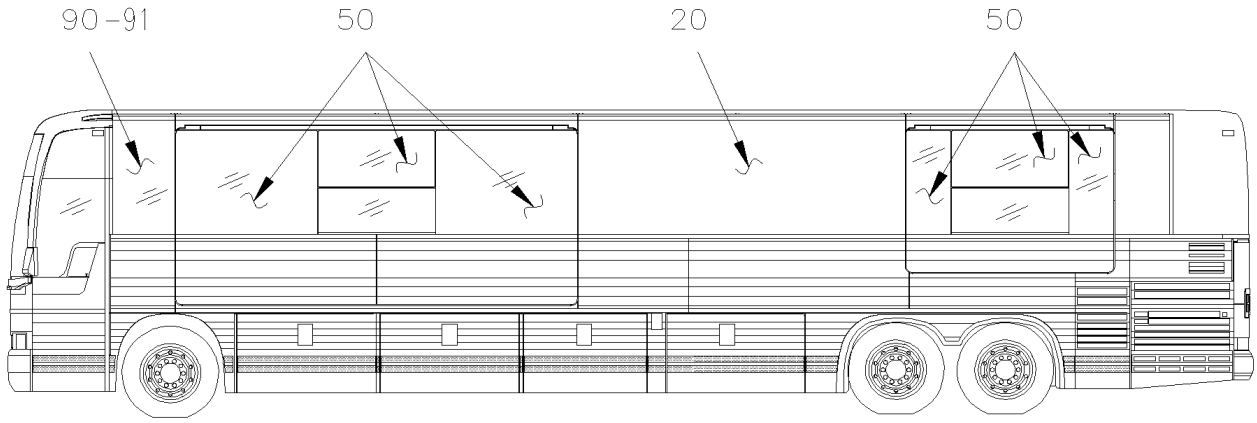

MTH. 45' WITH "SLIDE-OUT"

From Y-7046 To 8-9339		Date:07/2024	PAGE:Y2-1884-50

SIDE WINDOW - MTH

Item#	Part	Description	XLII 45	XLII MTH40	XLII MTH45	XLII MTH45E	NOTES
1	293130	GLASS ASSY, SINGLE 13% / 1287.4MM / W/83" MTH To Y-7128		AR	AR		
1	293132	GLASS ASSY, THERMOS 13% / 1287.4MM / W/83" MTH To Y-7128		AR	AR		
1	293177	GLASS ASSY, SINGLE 13% / 1287.4MM / W/86" & 89" MTH To 4-8270		AR	AR	AR	
1	297084	GLASS ASSY, SINGLE 13% / 1287.4MM / W/86" & 89" MTH From 4-8271		AR	AR	AR	
1	293178	GLASS ASSY, THERMOS 13% / 1287.4MM / W/86" & 89" MTH To 4-8270		AR	AR	AR	
1	297083	GLASS ASSY, THERMOS 13% / 1287.4MM / W/86" & 89" MTH From 4-8271		AR	AR	AR	
2	293327	GLASS ASSY, THERMOS 13% / 685.7MM / W/83" MTH To Y-7128		AR	AR		
2	293326	GLASS ASSY, SINGLE 13% / 685.7MM / W/83" MTH To Y-7128		AR	AR		
2	293329	GLASS ASSY, THERMOS 13% / 685.7MM / W/86" MTH			AR	AR	
2	293328	GLASS ASSY, SINGLE 13% / 685.7MM / W/86" MTH			AR	AR	
3	293133	GLASS ASSY, SINGLE 13% / UPPER / 1287.4MM / W/83" MTH To Y-7128		AR	AR		
3	293134	GLASS ASSY, THERMOS 13% / UPPER / 1287.4MM / W/83" MTH To Y-7128		AR	AR		
3	293179	GLASS ASSY, SINGLE 13% / UPPER / 1287.4MM / W/86" MTH To 4-8270		AR	AR	AR	
3	297085	GLASS ASSY, SINGLE 13% / UPPER / 1287.4MM / W/86" MTH From 4-8271		AR	AR	AR	
3	293180	GLASS ASSY, THERMOS 13% / UPPER / 1287.4MM / W/86" MTH To 4-8270		AR	AR	AR	
3	297081	GLASS ASSY, THERMOS 13% / UPPER / 1287.4MM / W/86" MTH To 4-8270		AR	AR	AR	
3	293906	GLASS ASSY, THERMOS 13% / UPPER / 1287.4MM / W/86" MTH From 4-8271		AR	AR	AR	
3	293942	GLASS ASSY, THERMOS 13% / UPPER / 1287.4MM / W/86" MTH From 4-8271		AR	AR	AR	
4	293125	STOPPER BLOCK SEPARATOR / 2 GLASS		AR	AR	AR	
4	293124	STOPPER BLOCK		AR	AR	AR	
5	500611	SCREW TC PAN PH #10-24x1/2 Z050		AR	AR	AR	
6	**Y2-1884-60**	**AWNING WINDOW - MTH**					
6	**Y2-1884-65**	**ELECTRICAL AWNING WINDOW ASSY**					
7	**790458**	**SLIDING WINDOW L.H. - MTH From Y-7046 To 7-9188**					
7	**790459**	**SLIDING WINDOW R.H. - MTH From Y-7046 To 7-9286**					
7	**Y2-1884-80**	**ELECTRICAL SLIDING WINDOW ASSY**					
8	293135	RUBBER SEAL 1315MM / W/83" To Y-7128		6	6		
8	293136	RUBBER SEAL 1391MM W/86" & 89"		6	6	6	
8	293250	RUBBER SEAL 1292MM / EACH WINDOW		8	8		
8	293251	RUBBER SEAL 1368MM / 86"		8	8	8	
9	293281	RUBBER SEAL EXTRUSION / ADHESIVE / LOWER WINDOW		AR	AR	AR	
10	683097	CLEANER SIKA #205 / CLEAR / 1000ml		AR	AR	AR	
10	683446	PRIMER SIKA #206 / BLACK / 1000ml		AR	AR	AR	
10	683447	ADHESIVE SIKATACK PLUS / BLACK / 23 Liters		AR	AR	AR	
10	683448	ACCELERATOR SIKA / 600ml SAUSAGE		AR	AR	AR	
20	**Y2-1854-50**	**SIDE PANELS - MTH**					
50	**Y2-1884-90**	**SIDE WINDOW - "SLIDE-OUT" To 6-8805**					
50	**Y2-1884-91**	**SIDE WINDOW - "SLIDE-OUT" From 6-8806**					
90	690015	GLASS ASSY SINGLE 685.7MM W/86" 685.7MMx1400.7MM To 4-8251			1	1	A
90	690038	GLASS ASSY THERMO 685.7MM W/86" 685.7MM x 1400.7MM To 4-8251			1	1	A
90	293736	GLASS ASSY, THERMOS 685.7MM W/86" / STREETSIDE 685.7MM x 1382.6MM O.E.M. From 4-8252			1	1	A
91	293977	GLASS THERMO 685.7MM W/86" CURBSIDE CONVERTER'S OPTION			AR		B

From Y-7046 To 8-9339		Date:07/2024	PAGE:Y2-1884-50

SIDE WINDOW - MTH

Item#	Part	Description	XLII 45	XLII MTH40	XLII MTH45	XLII MTH45E	NOTES
		A) USE ONLY WITH FRONT "SLIDE-OUT"					
		B) SOME CONVERTER'S USE WITH FRONT "SLIDE-OUT" CURBSIDE "SPECIAL ORDER" / THIS IS NOT A PREVOST INSTALLATION.					

From Y-7046 To 8-9339		Date:07/2024	PAGE:790458
SLIDING WINDOW L.H. - MTH			

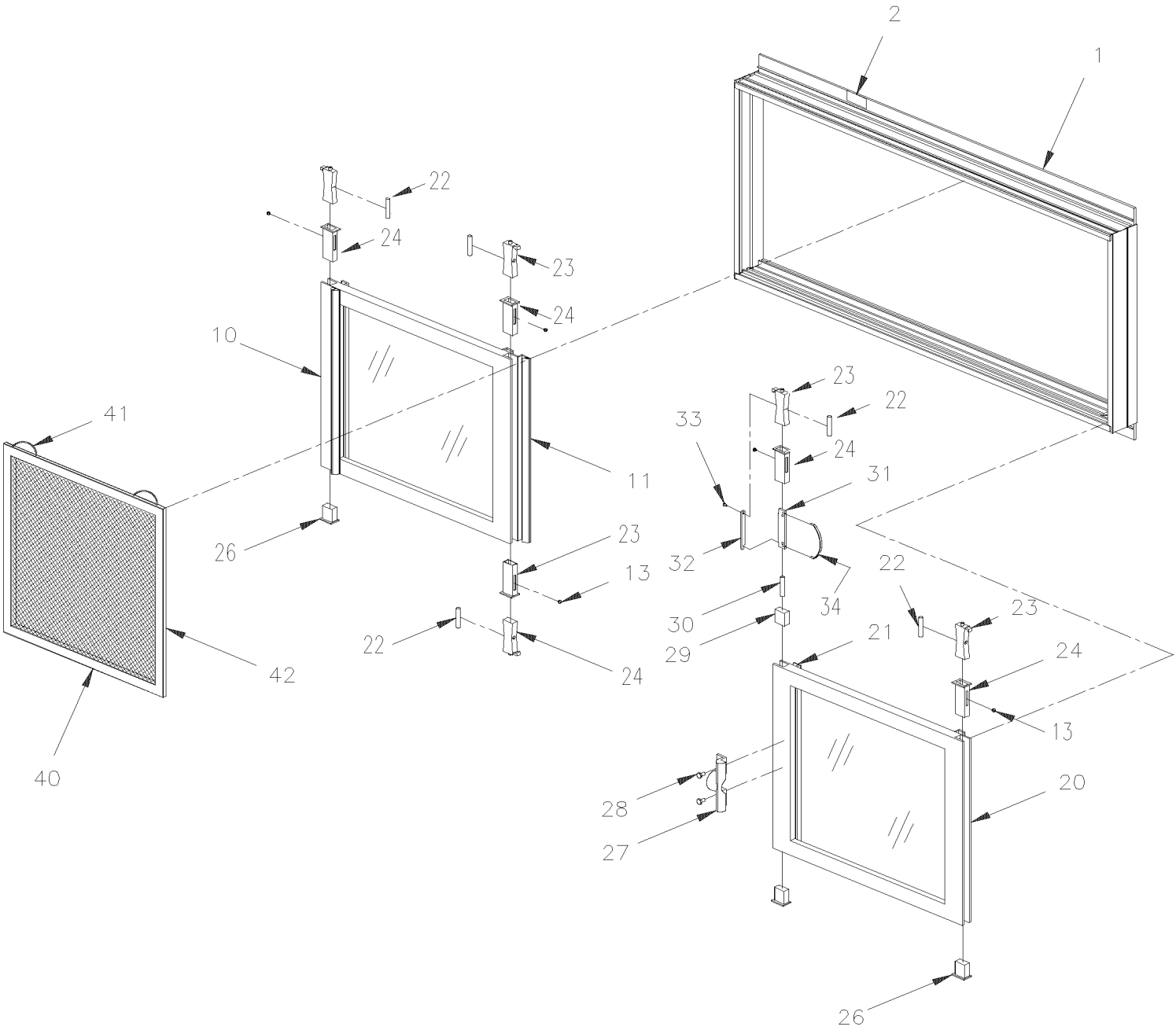

From Y-7046 To 8-9339		Date:07/2024	PAGE:790458

SLIDING WINDOW L.H. - MTH

Item#	Part	Description	XLII 45	XLII MTH40	XLII MTH45	XLII MTH45E	NOTES
		SLIDING WINDOW L.H. - MTH			1	1	
1	790509	. MAIN FRAME ASSY LEFT			1	1	
NS	790488	. SEAL EXTERIOR			1	1	
2	792993	. DECAL, EMERGENCY EXIT			1	1	
10	790511	. WINDOW FIX / SLIDING LEFT			1	1	
11	790519	. RUBBER			AR	AR	
13	790517	. STOP			5	5	
20	790513	. WINDOW SLIDING / SLIDING LEFT			1	1	
21	790526	. GASKET CENTRAL			AR	AR	
NS	791008	. KIT SLIDING LOCK PIN UPPER & LOWER			5	5	
. 22	790518	. . SPRING			1	1	
. 23	790489	. . LOCK PIN			1	1	
. 24	790516	. . COVER, SPRING			1	1	
. 25	790517	. . STOP			1	1	
. 26	790515	. . POINT SLIDING			1	1	
27	790522	. HANDLE			1	1	
28	790524	. SCREW			2	2	
29	790523	. BLOCK			1	1	
30	790520	. SPRING, COMPRESSION			1	1	
31	790491	. LOCK			1	1	
32	790490	. ROD			1	1	
33	790525	. SCREW			2	2	
34	N.P.N.	. SPRING TENSIONER			1	1	4
40	790527	. SCREEN			1	1	
41	790521	. . SPRING SCREEN			2	2	
42	790528	. . SCHLEGEL BLACK 3/8" (20FT)			AR	AR	
		4) NO PARTS NUMBER					

From Y-7046 To 8-9339		Date:07/2024	PAGE:790459
SLIDING WINDOW R.H. - MTH			

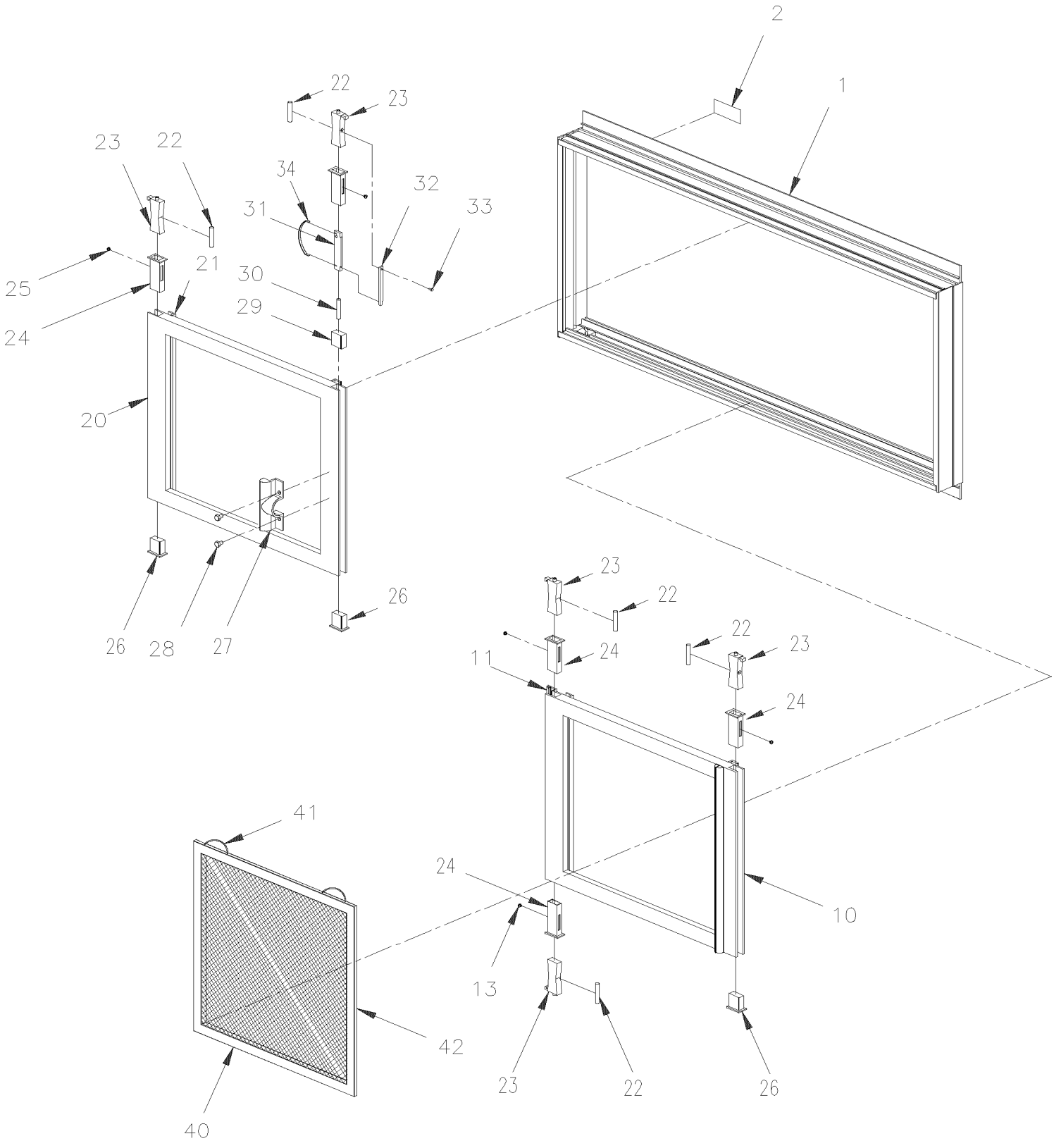

From Y-7046 To 8-9339		Date:07/2024	PAGE:790459

SLIDING WINDOW R.H. - MTH

Item#	Part	Description	XLII 45	XLII MTH40	XLII MTH45	XLII MTH45E	NOTES
		SLIDING WINDOW R.H. - MTH			1	1	
1	790510	. MAIN FRAME ASSY RIGHT			1	1	
NS	790488	. SEAL EXTERIOR			1	1	
2	792993	. DECAL, EMERGENCY EXIT			1	1	
10	790512	. WINDOW FIX / SLIDING RIGHT			1	1	
11	790519	. RUBBER			AR	AR	
13	790517	. STOP			4	4	
20	790514	. WINDOW SLIDING / SLIDING RIGHT			1	1	
21	790526	. GASKET CENTRAL			AR	AR	
21	791008	. KIT SLIDING LOCK PIN UPPER & LOWER			5	5	
. 22	790518	. . SPRING			1	1	
. 23	790489	. . LOCK PIN			1	1	
. 24	790516	. . COVER, SPRING			1	1	
. 25	790517	. . STOP			1	1	
. 26	790515	. . POINT SLIDING			1	1	
27	790522	. HANDLE			1	1	
28	790524	. SCREW			2	2	
29	790523	. BLOCK			1	1	
30	790520	. SPRING, COMPRESSION			1	1	
31	790491	. LOCK			1	1	
32	790490	. ROD			1	1	
33	790525	. SCREW			2	2	
34	N.P.N.	. SPRING TENSIONER			1	1	4
40	790527	. SCREEN			1	1	
41	790521	. . SPRING SCREEN			2	2	
42	790528	. . SCHLEGEL BLACK 3/8" (20FT)			AR	AR	
		4) NO PARTS NUMBER					

From Y-7046 To 8-9339		Date:07/2024	PAGE:Y2-1884-60
AWNING WINDOW - MTH			

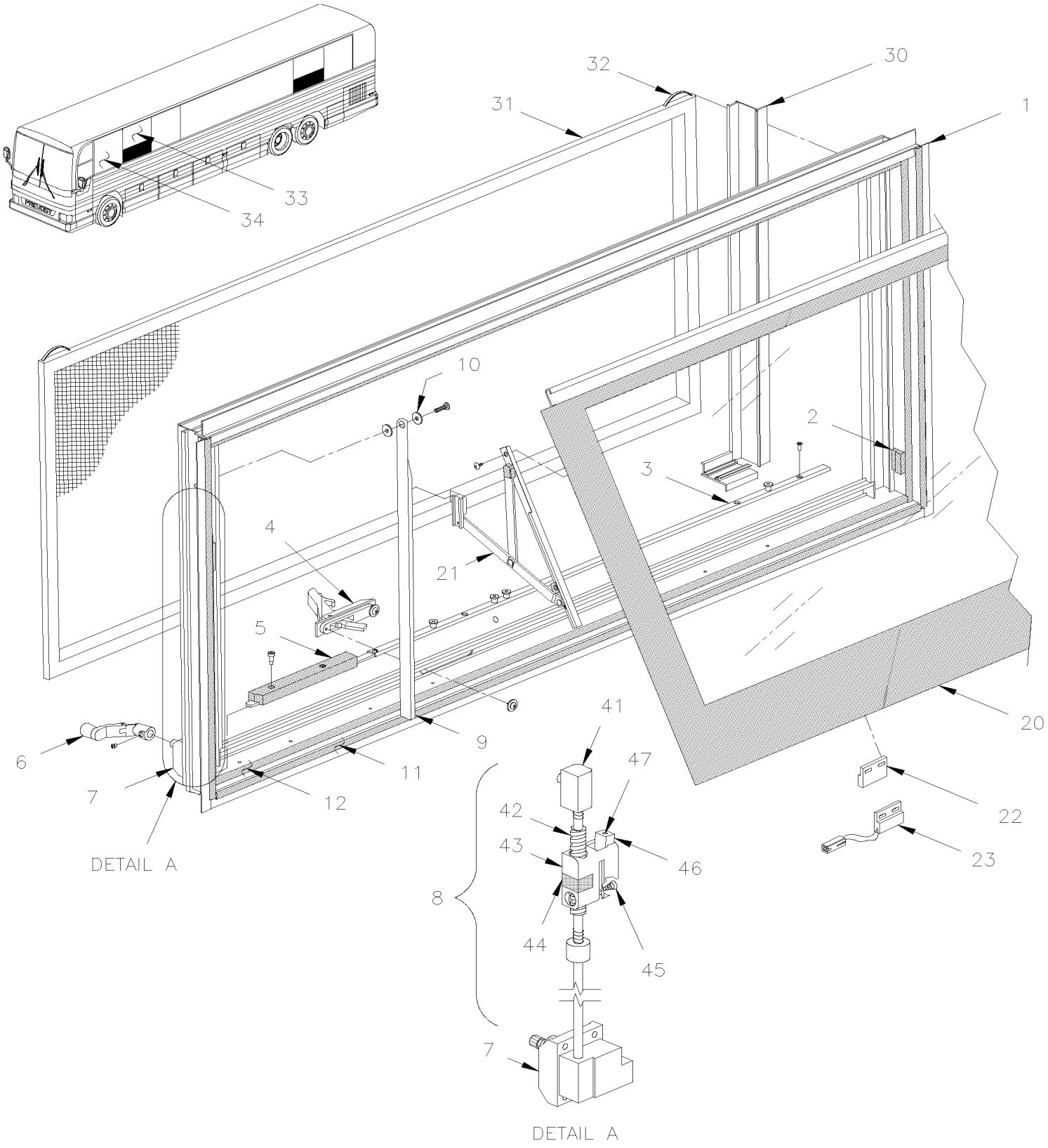

From Y-7046 To 8-9339		Date:07/2024	PAGE:Y2-1884-60

AWNING WINDOW - MTH

Item#	Part	Description	XLII 45	XLII MTH40	XLII MTH45	XLII MTH45E	NOTES
		"WARNING" - "WARNING" - "WARNING"					
		THIS WINDOW IT OBSOLETE,					
		ONLY SOME PARTS ARE AVALIABLE					
	790457	AWNING WINDOW ASSY		AR	AR	AR	
1	790480	. MAIN FRAME ASSY		1	1	1	
2	064360	. SWITCH MAGNETIC ASSY		1	1	1	
3	790493	. RELEASE BAR ASSY		1	1	1	
4	790471	. RELEASE HANDLE ASSY		1	1	1	
4	293526	. RELEASE HANDLE ASSY / RED		1	1	1	
5	790476	. RELEASE EMERGENCY MECHANISM		1	1	1	
6	790467	. CRANK HANDLE		1	1	1	
7	790477	. GEARBOX ASSY		1	1	1	
8	790478	. DRIVE SHAFT MECHANISM ASSY		1	1	1	
9	790492	. CHANNEL SS "V" SHAPE		1	1	1	
10	790487	. BUSHING NYLON		1	1	1	
11	790483	. GASKET EXTERIOR		1	1	1	
12	790484	. GASKET INTERIOR		1	1	1	
20	790481	. GLASS ASSY W/HINGE		1	1	1	
. NS	790469	. . GLASS ONLY		1	1	1	
20	790496	. . STRIKING PLATE		2	2	2	
20	N.P.N.	. . SCREW TC FL PH 8-32 X 5/16		4	4	4	4
21	790479	. . HINGE ASSY		1	1	1	
22	562641	. . MAGNET		1	1	1	
23	064360	. SWITCH MAGNETIC ASSY		1	1	1	
30	790472	. INTERIOR MOULDING RETAINER		1	1	1	
31	790473	. SCREEN		1	1	1	
32	790521	. . SPRING SCREEN		2	2	2	
33	**Y2-1884-50**	**SIDE WINDOW - MTH**					
34	**Y2-1884-50**	**SIDE WINDOW - MTH**					
41	790532	BEARING BLOCK		1	1	1	
41		SCREW MA FL PH SS 8-32 X 1/4 / (502715)		1	1	1	
42	790533	ROD ACME		1	1	1	
43	790534	CARRIER BLOCK		1	1	1	
44	790535	BLOCK ACME / PLASTIC		1	1	1	
45	790536	SPRING CONICAL		1	1	1	
46	790537	HOOK / SAFETY		1	1	1	
47	5001429	SCREW MA FL PH M4-0.7x25 BK		1	1	1	
48	290545	KIT SERVICE AWNING EMERGENCY WINDOW HANDLE	1	1	1	1	
. NS	293526	. RELEASE HANDLE ASSY / RED	1	1	1	1	
. NS	401435	. EXTENSION EMERGENCY HANDLE WINDOW	1	1	1	1	
. NS	504106	. RIVET POP DOME OE 1/8x1/4 AL	1	1	1	1	

From Y-7046 To 8-9339		Date:07/2024	PAGE:Y2-1884-60

AWNING WINDOW - MTH

Item#	Part	Description	XLII 45	XLII MTH40	XLII MTH45	XLII MTH45E	NOTES
		4) NO PARTS NUMBER					

From 4-8325 To 8-9339		Date:07/2024	PAGE:Y2-1884-65
ELECTRICAL AWNING WINDOW ASSY			

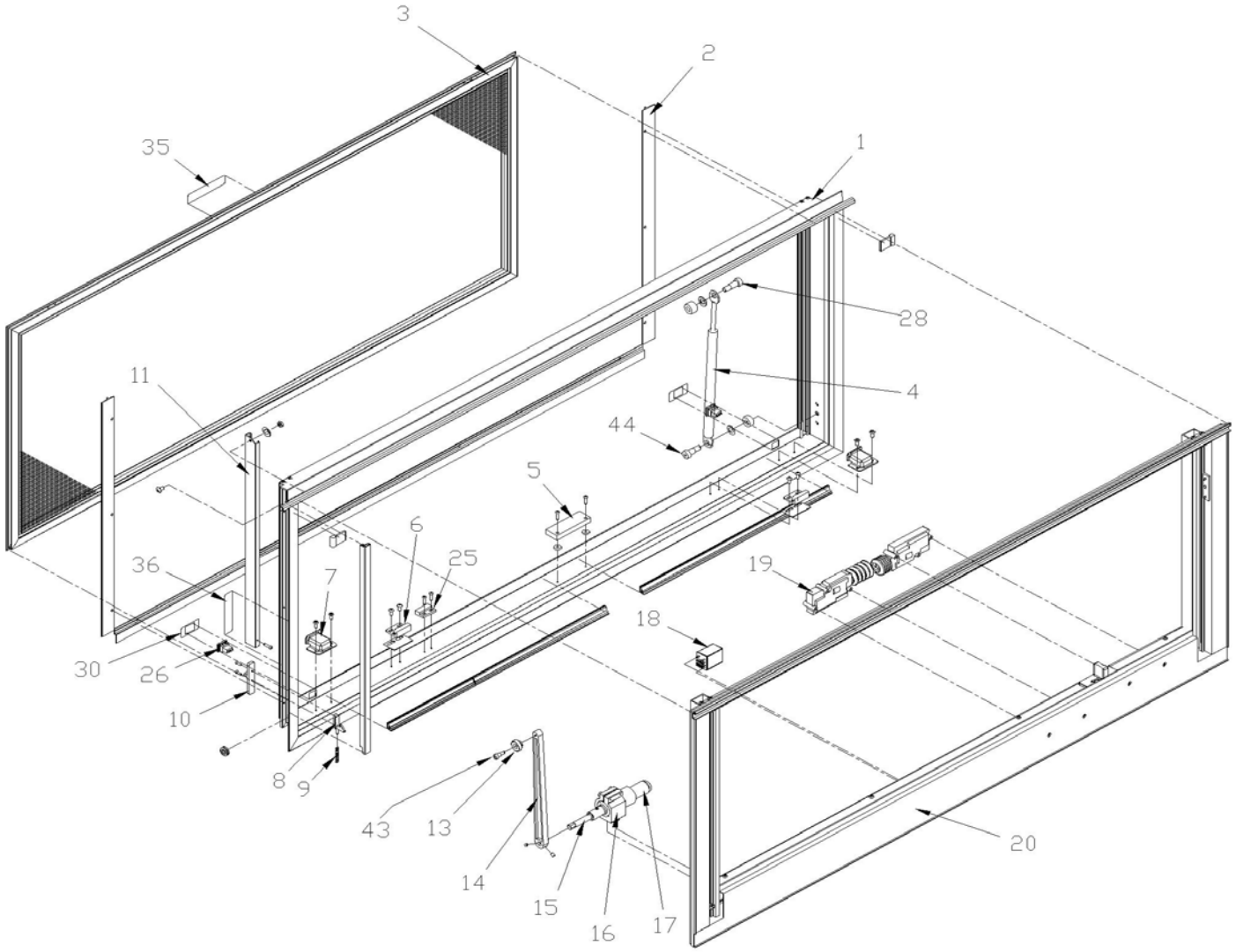

From 4-8325 To 8-9339		Date:07/2024	PAGE:Y2-1884-65
ELECTRICAL AWNING WINDOW ASSY			

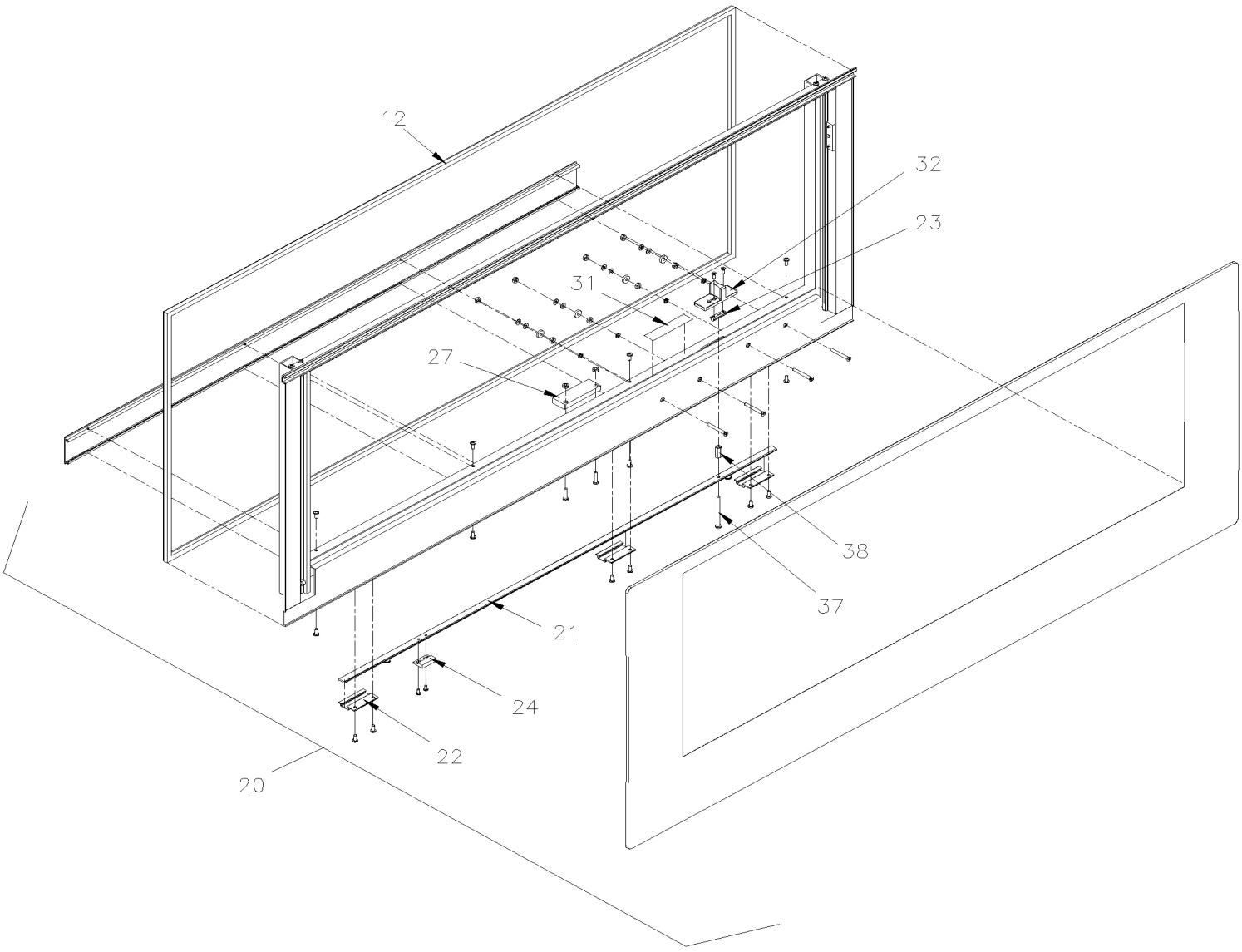

From 4-8325 To 8-9339		Date:07/2024	PAGE:Y2-1884-65
ELECTRICAL AWNING WINDOW ASSY			

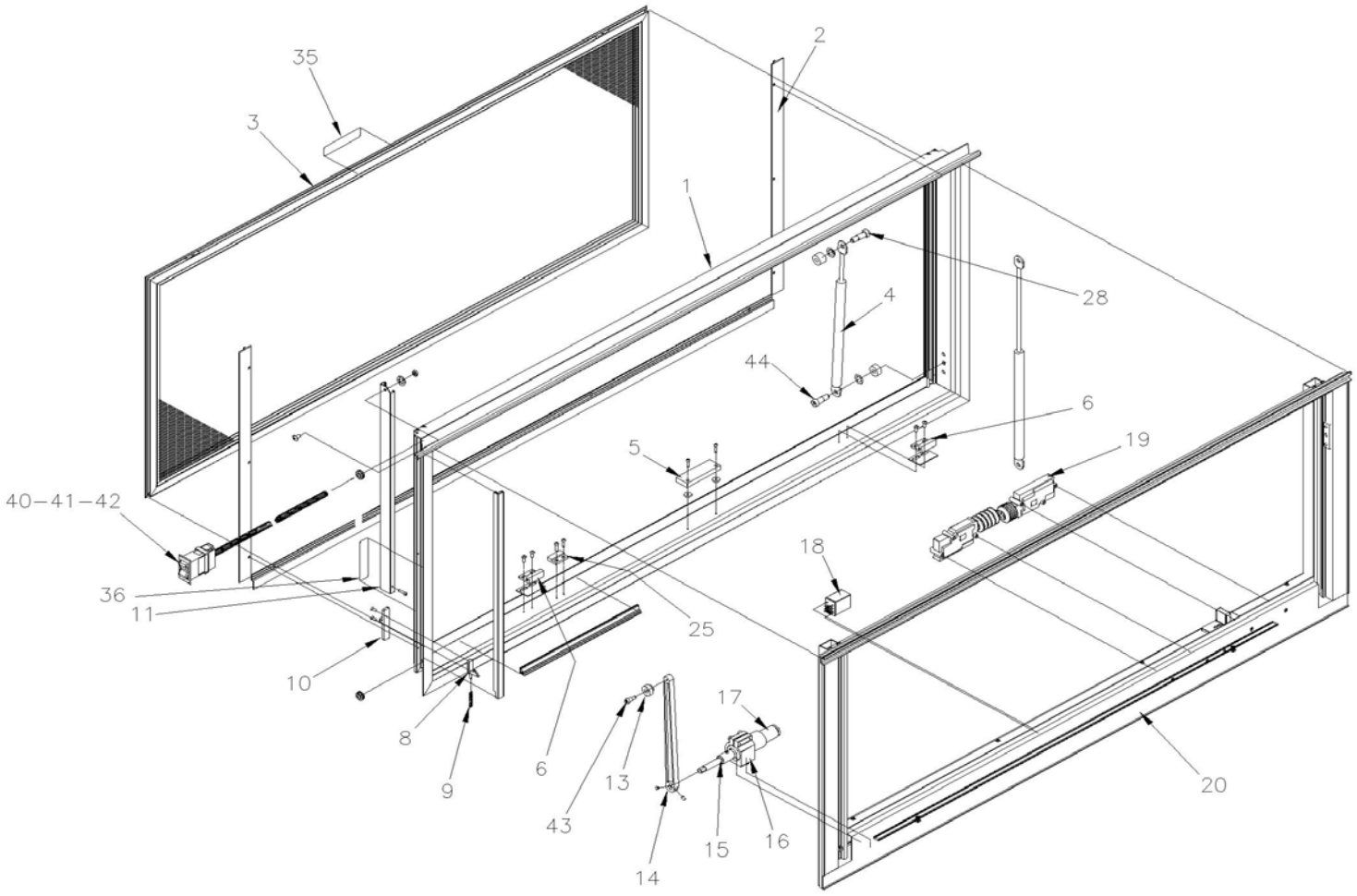

From 4-8325 To 8-9339		Date:07/2024	PAGE:Y2-1884-65

ELECTRICAL AWNING WINDOW ASSY

Item#	Part	Description	XLII 45	XLII MTH40	XLII MTH45	XLII MTH45E	NOTES
	790564	AWNING WINDOW ASSY To 5-8623		1	1	1	C
	790607	AWNING WINDOW ASSY From 5-8624 To 5-8754		1	1	1	
	790613	AWNING WINDOW ASSY / W/REMOTE SWITCH OPERATING From 5-8755		1	1	1	
. NS	291204	. DECAL,SP2 FI (2)OPEN AWNING WIND From 5-8755		1	1	1	
. NS	291205	. DECAL, SP2 FI (3)OPEN WINDOW From 5-8755		1	1	1	
	790565	AWNING WINDOW ASSY To 5-8623			1		A
	790608	AWNING WINDOW ASSY From 5-8624 To 5-8754			1		A
	790614	AWNING WINDOW ASSY / W/REMOTE SWITCH OPERATING From 5-8755			1		A
. NS	291204	. DECAL,SP2 FI (2)OPEN AWNING WIND From 5-8755			1		A
. NS	291205	. DECAL, SP2 FI (3)OPEN WINDOW From 5-8755			1		A
1	790566	. FRAME ASSY To 5-8623		1	1	1	
1	790547	. FRAME ASSY From 5-8624 To 5-8754		1	1	1	
1	790595	. FRAME ASSY From 5-8755		1	1	1	
2	790568	. RETAINING RING		1	1	1	
2	790569	. RETAINING RING			1		A
3	790571	. SCREEN / XL-II 45" x 18 ½" To 5-8623		1	1	1	
3	790604	. SCREEN / WRECESS FOR SWITCHES / XL-II From 5-8624		1	1	1	
3	790571	. SCREEN / XL-II 45" x 18 ½" From 5-8755		1	1	1	
3	564832	. WIRING HARNESS ASSY FRAME MV100 From 5-8624		1	1	1	
4	790578	. CYLINDER		1	1	1	
5	563442	. PROXIMITY SWITCH MAGNET		1	1	1	
6	790577	. TIE BAR KEEPER To 5-8623		2	2	2	
6	790609	. TIE BAR KEEPER From 5-8624		2	2	2	
NS	790611	. SHIM KEEPER From 5-8624		2	2	2	
7	790576	. COVER ROCKER SWITCH To 5-8754		2	2	2	
8	790574	. TRACK LATCH		1	1	1	
9	790575	. SPRING		1	1	1	
10	790582	. RELEASE LATCH HANDLE / RED / SASH		1	1	1	
11	790581	. TRACK ROLLER		1	1	1	
12	790579	. SEAL		12FT	12FT	12FT	
13	790586	. ROLLER		1	1	1	
14	790585	. ARM		1	1	1	
NS	790045	. SET SCREW 10-32X1/4 S/S		2	2	2	
15	790587	. MOTOR COUPLER		1	1	1	
16	790588	. MOTOR MOUNT / LARGE O.D. To 5-8623		1	1	1	D
16	N.P.N.	. MOTOR MOUNT / SMALL O.D. From 5-8624		1	1	1	4
17	790593	. MOTOR / LARGE O.D. To 5-8623		1	1	1	D
17	N.P.N.	. MOTOR / SMALL O.D. From 5-8624		1	1	1	4
17	790619	. MOTOR ASSY W/MOTOR MOUNT / SMALL O.D. From 5-8624		1	1	1	E
18	563444	. RELAY 24V		1	1	1	
19	790592	. ACTUATOR		2	2	2	
20	790567	. GLASS ASSY W/AWNING FRAME To 5-8623		1	1	1	

From 4-8325 To 8-9339		Date:07/2024	PAGE:Y2-1884-65

ELECTRICAL AWNING WINDOW ASSY

Item#	Part	Description	XLII 45	XLII MTH40	XLII MTH45	XLII MTH45E	NOTES
20	790548	. GLASS ASSY W/AWNING FRAME From 5-8624		1	1	1	
21	790583	. TIE BAR XL		1	1	1	
22	790584	. GUIDE		2	2	2	
23	790580	. RELEASE LATCH GUIDE		1	1	1	
24	562641	. MAGNET		.1	.1	.1	
25	562640	. SWITCH MAGNETIC		1	1	1	
26	066182	. CABLE ASSY WITH ROCKER SWITCH AND HARNESS / W/XL2 To 5-8623		1	1	1	
26	563441	. . SWITCH / M/ON-OFF-M/ON / S.P.D.T / BLACK To 5-8623		2	2	2	
26	563570	. CABLE ASSY WITH ROCKER SWITCH AND HARNESS / W/XL2 & H3 From 5-8624 To 5-8754		1	1	1	
27	563443	. PROXIMITY SWITCH SENSOR		1	1	1	
28	790996	. SHOULDER BOLT 3/8 X 5/8		1	1	1	
30	790598	. DECAL / OPEN-CLOSE		1	1	1	
31	790601	. DECAL / "EMERGENCY EXIT" # 3		1	1	1	
32	790620	. RELEASE LATCH HANDLE / RED / FRAME		1	1	1	
35	790599	. DECAL / "EMERGENCY EXIT" # 1 / PULL SCREEN		1	1	1	
36	790600	. DECAL / "EMERGENCY EXIT" # 2		1	1	1	
37	790012	. SCREW MA PAN PH #10-32x2 1/4 SS		1	1	1	
38	790013	. COUPLING #10-32x5/16 OD x3/4 ZP		1	1	1	
40	563570	. CABLE ASSY WITH ROCKER SWITCH AND HARNESS / W/XL2 & H3 From 5-8755		1	1	1	B
NS	293854	. SUPPORT SWITCH / REMOTE OPERATIONAL MODEL From 5-8755		1	1	1	
41	563571	. SWITCH / M/ON-OFF-M/ON S.P.D.T. From 5-8755		1	1	1	
42	563572	. CAP / "OPEN - CLOSE" From 5-8755		1	1	1	
43	790058	. SHOULDER BOLT SS, 10-24X0.625		1	1	1	
44	790059	. SHOULDER BOLT SS, 3/8 X 1/2		1	1	1	
NS	066029	CABLE ASSY / POWER AWNING EXTENTION 3M From 5-8380		1	1	1	
NS	293862	KIT, RETROFIT TIE BAR KEEPER To 5-8623		1	1	1	
. NS	IS-04099	. SEE INSTRUCTION SHEET To 5-8623		1	1	1	
NS	7770423	MASK FOR WINDOW MTH		1	1	1	
		A) WITH "SLIDE-OUT"					
		B) THIS SWITCH ASSY COULD BE USE FROM 5-8624					
		C) FOR PRODUCT IMPROVEMENT, ASK KIT #293862 TO REPLACE THE KEEPERS.					
		D) THIS PART IT SUPPERSEEDED BY #790619					
		E) INCLUDE ITEMS # 15,16 & 17 WITH ELECTRICAL CONNECTOR					
		4) NO PARTS NUMBER					

From 7-9189 To 8-9339		Date:07/2024	PAGE:Y2-1884-80
ELECTRICAL SLIDING WINDOW ASSY			

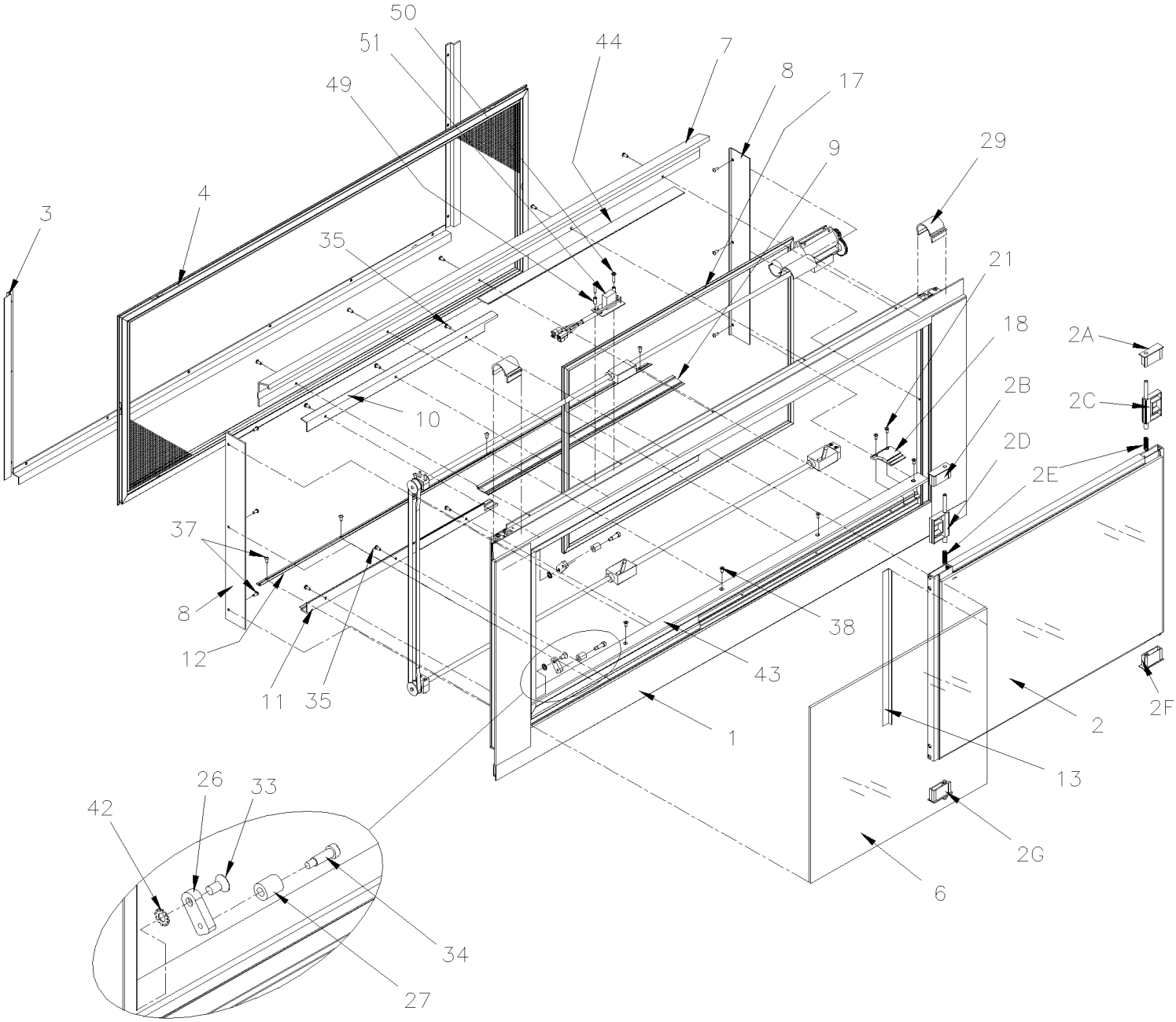

From 7-9189 To 8-9339		Date:07/2024	PAGE:Y2-1884-80
ELECTRICAL SLIDING WINDOW ASSY			

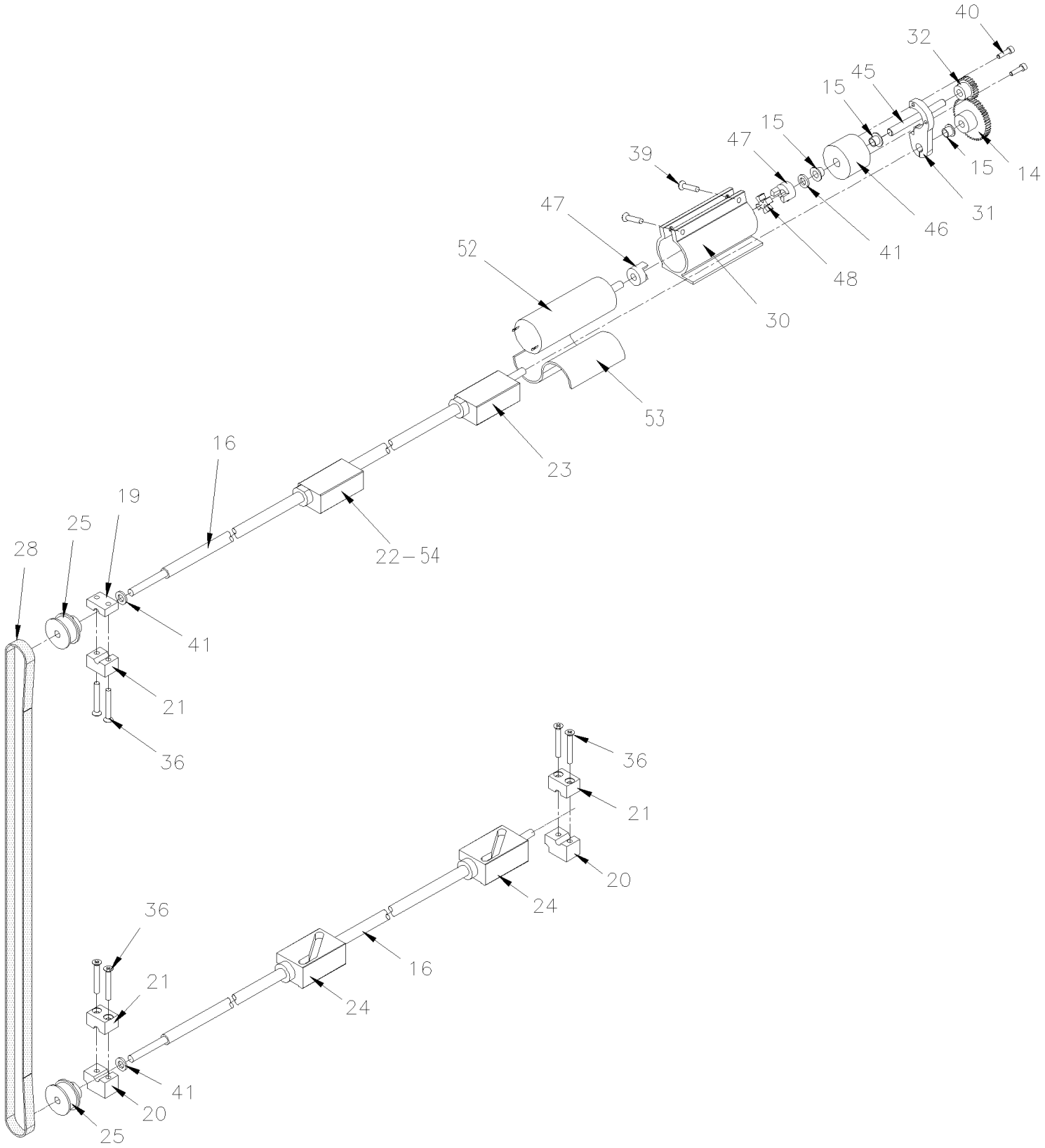

From 7-9189 To 8-9339		Date:07/2024	PAGE:Y2-1884-80

ELECTRICAL SLIDING WINDOW ASSY

Item#	Part	Description	XLII 45	XLII MTH40	XLII MTH45	XLII MTH45E	NOTES
		THIS ELECTRICAL WINDOW FIT ALSO ON MTH-40'					
	791001	ELECTRICAL SLIDING WINDOW ASSY			1	1	
1	790711	. FRAME COMPONENT ASSY			1	1	
2	790713	. SASH ASSY - 5MM T GRAY/4mm T CLR			1	1	
. A	790751	. . SASH INSERT - RH UPPER / LH LOWER			1	1	
. B	790750	. . SASH INSERT - LH UPPER / RH LOWER			1	1	
. C	790728	. . RELEASE LATCH ASSY - RH			1	1	
. D	790727	. . RELEASE LATCH ASSY - LH			1	1	
. E	790752	. . SPRING RELEASE LATCH			2	2	
. F	790732	. . FIXED SASH INSERT ASSY - RH			1	1	
. G	790730	. . FIXED SASH INSERT ASSY - LH			1	1	
3	790717	. CLAMPRING ASSY			1	1	
4	790719	. SCREEN ASSY			1	1	
6	790707	. GLASS ASSY-5MM T GRAY/4mm T CLR-XL2-FIXED			1	1	
7	790709	. COVER HEADER ACCESS			1	1	
8	790714	. JAMB COVER			2	2	
9	790729	. COVER SASH GUIDE - SILL			2	2	
10	790734	. COVER FIXED GUIDE - HEADER			1	1	
11	790737	. COVER FIXED GUIDE - SILL			1	1	
12	790758	. COVER INNER GUIDE			1	1	
13	790741	. FIXED GLAZING ANGLE			1	1	
14	790770	. SPUR GEAR - 1 1/2" - STAINLESS / W/24Volt Motor			1	1	
15	790743	. FLANGE BEARING 0.25" DEPTH			1	1	
16	790744	. DRIVE SHAFT			2	2	
17	790778	. D-SEAL EPDM SPONGE (PER FT)			AR	AR	
18	790746	. SASH END STOP			1	1	
19	790747	. BLOCK BASE SUPPORT SHAFT - UPPER			1	1	
20	790748	. BLOCK BASE SUPPORT SHAFT - LOWER			2	2	
21	790749	. CAP SUPPORT BLOCK SHAFT			3	3	
22	790724	. FOLLOWER CAM ASSY - UPPER w/ MAGNET			1	1	
. NS	790015	. . BUSHING INSERT			1	1	
23	790725	. FOLLOWER CAM ASSY - UPPER			1	1	
. NS	790015	. . BUSHING INSERT			1	1	
24	790726	. FOLLOWER CAM ASSY - LOWER			2	2	
. NS	790015	. . BUSHING INSERT			1	1	
25	790753	. PULLEY			2	2	
26	790754	. BRACKET TENSIONER			2	2	
27	790755	. ROLLER TENSIONER			2	2	
28	790756	. DRIVE BELT			1	1	
29	790757	. COVER, GEAR			1	1	
30	790740	. MOTOR MOUNT			1	1	

From 7-9189 To 8-9339		Date:07/2024	PAGE:Y2-1884-80

ELECTRICAL SLIDING WINDOW ASSY

Item#	Part	Description	XLII 45	XLII MTH40	XLII MTH45	XLII MTH45E	NOTES
31	790742	. MOTOR MOUNT END PLATE			1	1	
32	790769	. SPUR GEAR - 3/4" - ACETAL / W/24Volt Motor			1	1	
33	N.P.N.	. SCREW CAP FL HEXS 1/4-20 x 1/2			2	2	4
34	N.P.N.	. SCREW SHR CAP HEX .250x.625			2	2	4
35	500883	. SCREW TC PAN PH #8-32x3/8 Z050			6	6	
36	500887	. SCREW MA FL PH #8-32x1 1/4 SS			6	6	
37	790704	. SCREW CAP BUT HEXS #8-32x3/8 420 S/S BLACK OX			19	19	
38	790702	. SCREW MA FL PH #8-32x3/8 410 S/S BLACK OX			7	7	
39	790703	. SCREW MA FL PH #8-32x7/8 TYPE 23 410 SS			2	2	
40	790773	. SCREW CAP HEXS M3-0.5x9.5 SS			2	2	
41	790774	. WASHER FL .250x.470x .065			2	2	
42	790775	. WASHER LO EXT .250x.500x.187 SS			2	2	
43	790760	. STRIP ANTI FRICTION			1	1	
44	790762	. COVER SASH GUIDE - HEADER			1	1	
45	790767	. OUTPUT SHAFT			1	1	
46	790768	. SUPPORT OUTPUT SHAFT			1	1	
47	790766	. JAW COUPLER			2	2	
48	790765	. SPIDER			1	1	
49	790772	. SPACER SLEEVE			2	2	
50	790700	. SCREW MA PAN PH #8-32x7/8 TYPE 23 410 SS			1	1	
51	790764	. VOLTAGE REGULATOR			1	1	
NS	790736	. CABLE ASSY W/CAPACITOR / MOTOR 24V			1	1	
. NS	790721	. . FRAME WIRING HARNESS WITH RELAY ASSY			1	1	
. . NS	790002	. . . RELAY			1	1	
. NS	790722	. . POWER WIRING HARNESS ASSY			1	1	
. NS	790738	. . MOTOR ELECTRIC 24V ASSY / W/CABLE			1	1	
. NS	790723	. . PROXIMITY SENSOR ASSY			2	2	
. NS	563570	. . CABLE ASSY WITH ROCKER SWITCH AND HARNESS / W/XL2 & H3			1	1	
. NS	790764	. . VOLTAGE REGULATOR			1	1	
52	790738	. MOTOR ELECTRIC 24V ASSY / W/CABLE			1	1	
53	790771	. PAD VIBRATION DAMPER			1	1	
54	790723	. PROXIMITY SENSOR ASSY			2	2	
NS	790788	. KIT ELECTRICAL WIRING HARNESS FOR WINDOW ASSY			1	1	
NS	790721	. . FRAME WIRING HARNESS WITH RELAY ASSY			1	1	
. NS	790002	. . . RELAY			1	1	
NS	790722	. . POWER WIRING HARNESS ASSY			1	1	
NS	563570	. . CABLE ASSY WITH ROCKER SWITCH AND HARNESS / W/XL2 & H3			1	1	
		4) NO PARTS NUMBER					

		Date:07/2024	PAGE:Y2-1884-90
SIDE WINDOW - "SLIDE-OUT"			

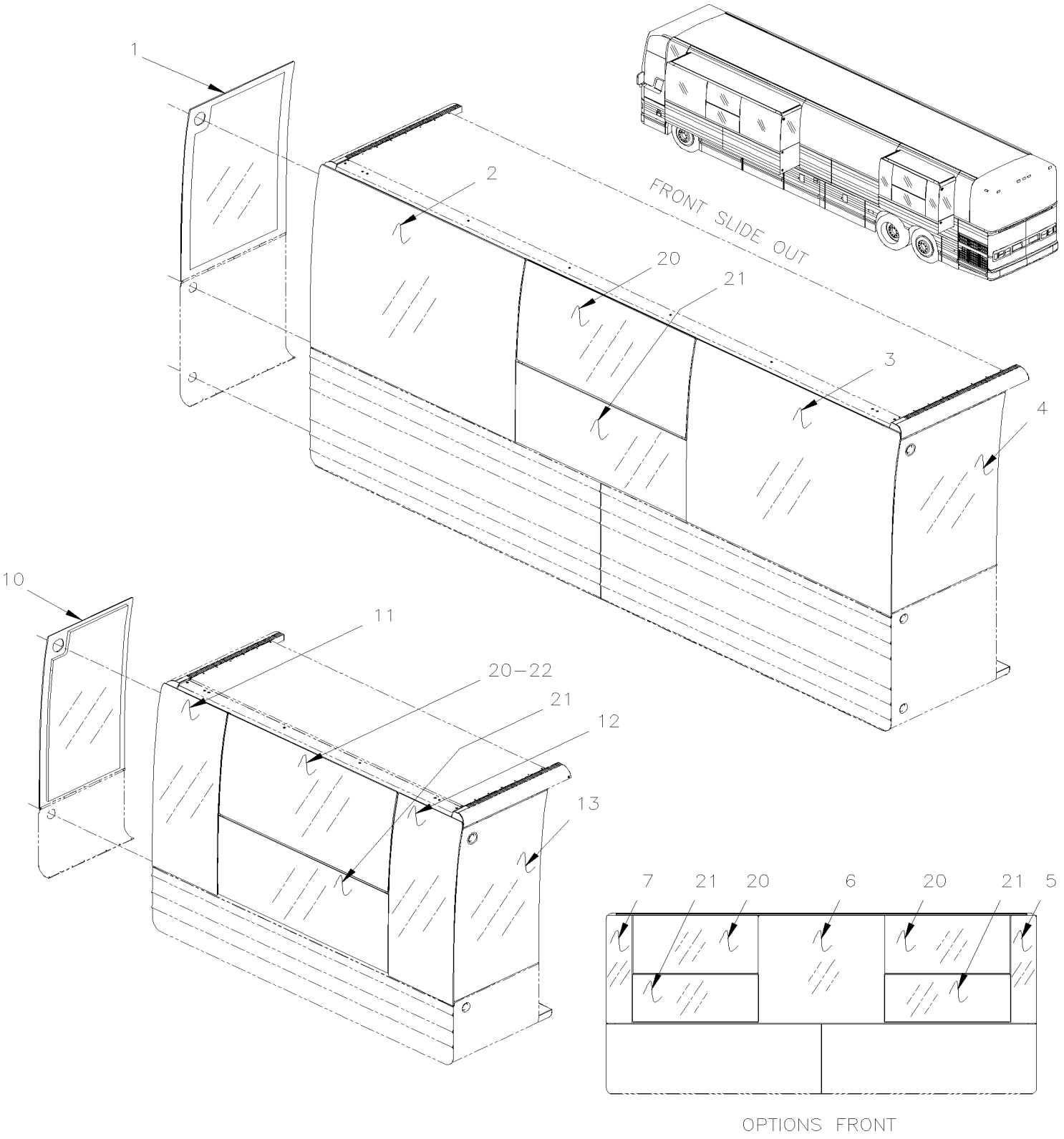

		Date:07/2024	PAGE:Y2-1884-90

SIDE WINDOW - "SLIDE-OUT"

Item#	Part	Description	XLII 45	XLII MTH40	XLII MTH45	XLII MTH45E	NOTES
1	690168	GLASS, THERMO 13% / FRONT SIDE To 3-8129			1		
1	296974	GLASS, THERMO 13% / FRONT SIDE From 3-8130			1		
1	690167	GLASS, SINGLE 13% / FRONT SIDE To 3-8129			1		
1	296982	GLASS, SINGLE 13% / FRONT SIDE From 3-8130			1		
2	690171	GLASS, THERMOS 13% / FRONT / 1561MM To 3-8129			1		
2	296973	GLASS, THERMOS 13% / FRONT / 1561MM From 3-8130			1		
2	690154	GLASS, SINGLE 13% / FRONT / 1561MM			1		
3	690172	GLASS, THERMOS 13% / REAR / 1561MM To 3-8129			1		
3	296970	GLASS, THERMOS 13% / REAR / 1561MM From 3-8130			1		
3	690155	GLASS, SINGLE 13% / REAR / 1561MM To 3-8129			1		
4	690166	GLASS, SINGLE 13% / REAR SIDE To 3-8129			1		
4	690169	GLASS, THERMO 13% / REAR SIDE To 3-8129			1		
4	296969	GLASS, THERMO 13% / REAR SIDE From 3-8130			1		
5	690254	GLASS, SINGLE 13% / REAR / 266MM To 3-8129			1		
6	690170	GLASS, THERMOS 13% / CENTER / 1287.4MM x 1191MM To 3-8129			1		
6	296977	GLASS, THERMOS 13% / CENTER / 1287.4MM From 3-8130			1		
6	690151	GLASS, SINGLE 13% / CENTER / 1287.4MM x 1191MM To 3-8129			1		
7	690253	GLASS, SINGLE 13% / FRONT / 266MM To 3-8129			1		
10	690164	GLASS, THERMO 13% / FRONT SIDE To 3-8129			1		
10	296979	GLASS, THERMO 13% / FRONT SIDE From 3-8130			1		
10	690162	GLASS, SINGLE 13% / FRONT SIDE To 3-8129			1		
10	296981	GLASS, SINGLE 13% / FRONT SIDE From 3-8130			1		
11	690177	GLASS, THERMOS 13% / FRONT / 494MM To 3-8129			1		
11	296976	GLASS, THERMOS 13% / FRONT / 494MM From 3-8130			1		
11	690173	GLASS, SINGLE 13% / FRONT / 494MM To 3-8129			1		
12	690178	GLASS, THERMOS 13% / REAR / 494MM To 3-8129			1		
12	296978	GLASS, THERMOS 13% / REAR / 494MM From 3-8130			1		
12	690174	GLASS, SINGLE 13% / REAR / 494MM To 3-8129			1		
13	690165	GLASS, THERMO 13% / REAR SIDE To 3-8129			1		
13	296980	GLASS, THERMO 13% / REAR SIDE From 3-8130			1		
13	690163	GLASS, SINGLE 13% / REAR SIDE To 3-8129			1		
20	690161	GLASS, THERMOS 13% / UPPER / 1287.4MM To 3-8129			1		
20	296971	GLASS ASSY, THERMOS 13% / UPPER / 1287.4MM From 3-8130			1		
20	690160	GLASS, SINGLE 13% / UPPER / 1287.4MM To 3-8129			1		
21	**Y2-1884-60**	**AWNING WINDOW - MTH**					
21	**790458**	**SLIDING WINDOW L.H. - MTH**					
22	690170	GLASS, THERMOS 13% / CENTER / 1287.4MM x 1191MM To 3-8129			1		
22	296977	GLASS, THERMOS 13% / CENTER / 1287.4MM From 3-8130			1		
22	690151	GLASS, SINGLE 13% / CENTER / 1287.4MM x 1191MM To 3-8129			1		

		Date:07/2024	PAGE:Y2-1884-91
SIDE WINDOW - "SLIDE-OUT"			

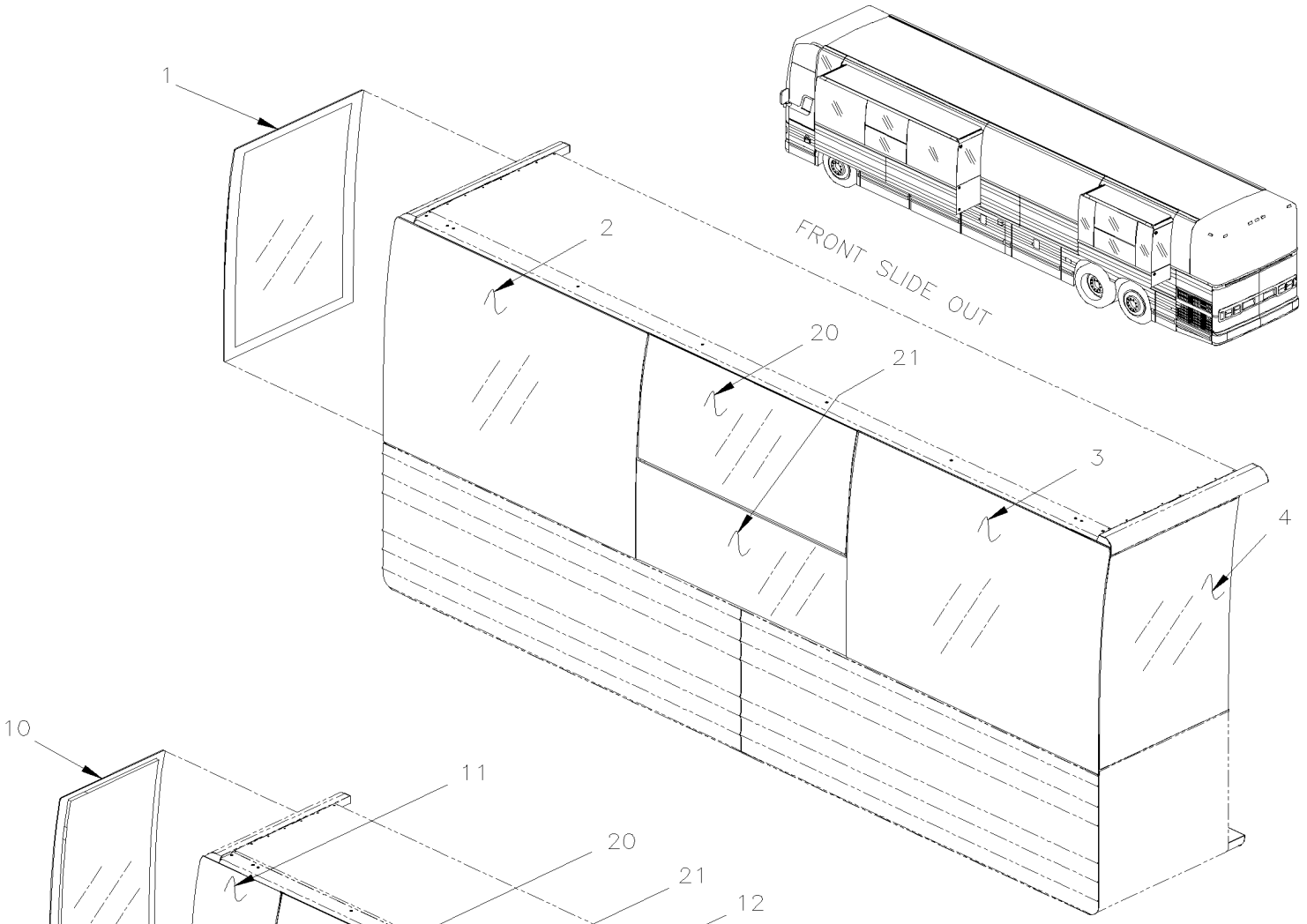

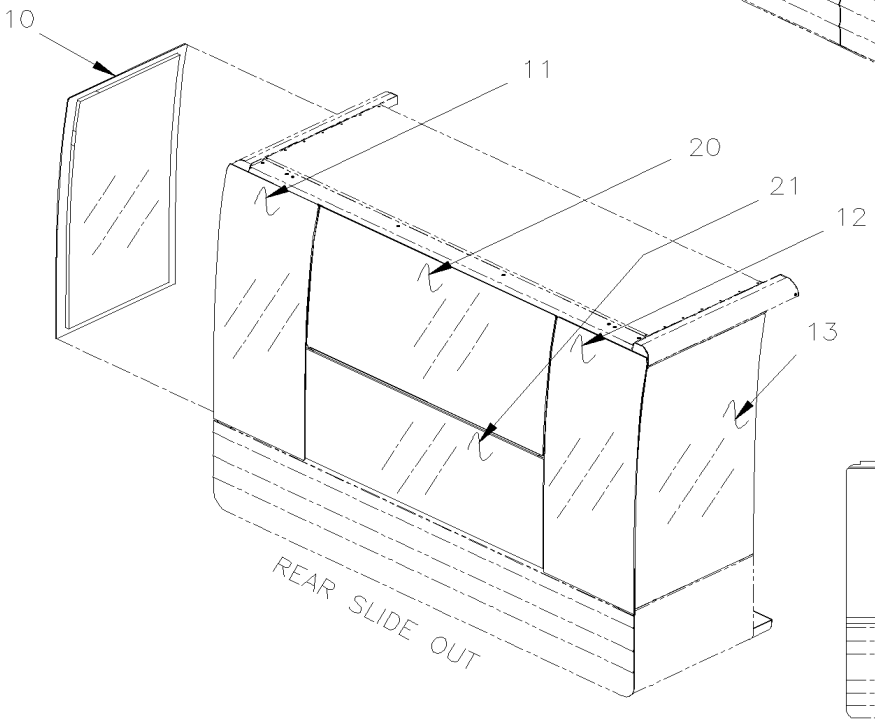

MTH 45'

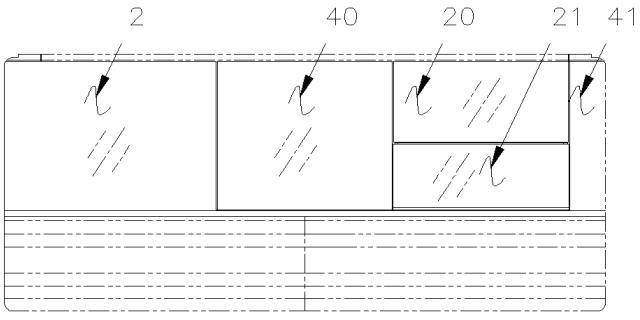

OPTIONS FRONT

		Date:07/2024	PAGE:Y2-1884-91
SIDE WINDOW - "SLIDE-OUT"			

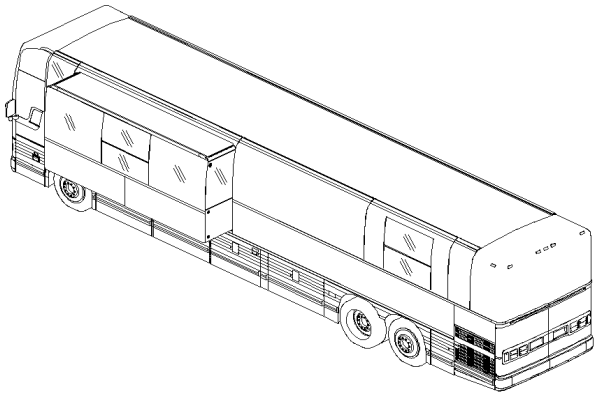

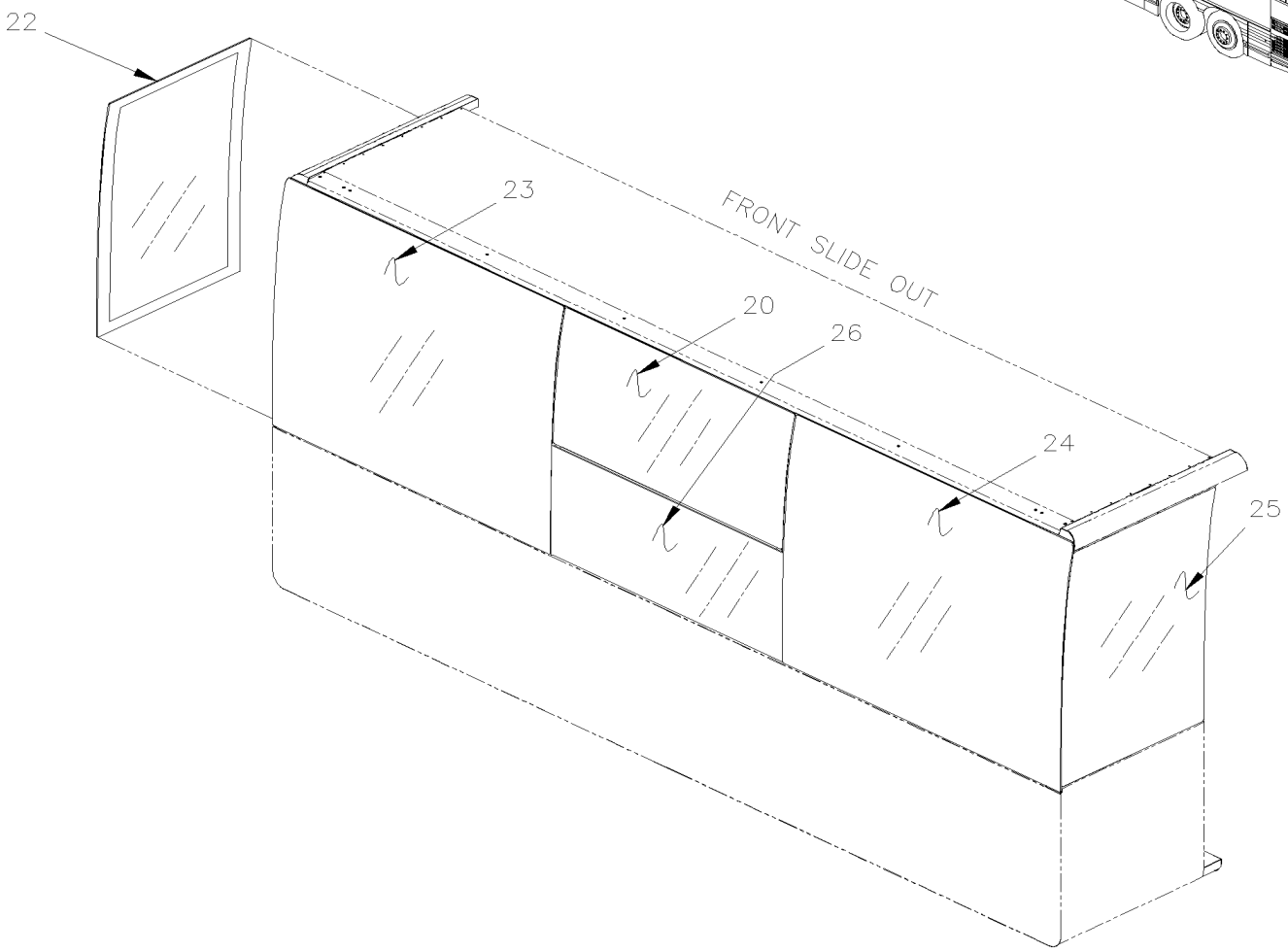

MTH 45' ENT.

		Date:07/2024	PAGE:Y2-1884-91

SIDE WINDOW - "SLIDE-OUT"

Item#	Part	Description	XLII 45	XLII MTH40	XLII MTH45	XLII MTH45E	NOTES
1	293411	GLASS, THERMOS 13% / FRONT SIDE / 800MM			1		
2	293412	GLASS, THERMOS 13% / FRONT / 1561MM			1		
3	293414	GLASS, THERMOS 13% / REAR / 1561MM			1		
4	293415	GLASS, THERMOS 13% / REAR SIDE / 800MM			1		
10	293418	GLASS, THERMOS 13% / FRONT SIDE / 648MM			1		
11	293419	GLASS, THERMOS 13% / FRONT / 495MM			1		
12	293420	GLASS, THERMOS 13% / REAR / 495MM			1		
13	293421	GLASS, THERMOS 13% / REAR SIDE / 648MM			1		
20	293413	GLASS ASSY, THERMOS 13% / UPPER / 1287.4MM To 7-9188			1	1	
20	293928	GLASS ASSY, THERMOS 13% / UPPER / 1287.4MM From 7-9189 To 7-9287			1	1	S
20	293929	GLASS ASSY, THERMOS 13% / UPPER / 1287.4MM From 7-9288			1	1	W
21	**Y2-1884-65**	**ELECTRICAL AWNING WINDOW ASSY**					
21	**Y2-1884-80**	**ELECTRICAL SLIDING WINDOW ASSY**					
22	293418	GLASS, THERMOS 13% / FRONT SIDE / 648MM				1	
23	293832	GLASS, THERMOS 13% / FRONT / 1125MM				1	
24	293833	GLASS, THERMOS 13% / REAR / 1125MM				1	
25	293421	GLASS, THERMOS 13% / REAR SIDE / 648MM				1	
26	**790458**	**SLIDING WINDOW L.H. - MTH**					
26	**Y2-1884-80**	**ELECTRICAL SLIDING WINDOW ASSY**					
30	293281	RUBBER SEAL EXTRUSION / ADHESIVE / LOWER WINDOW			AR	AR	
31	506002	TAPE RUB ADH1 CC POL 3/16" x 1/2" x 40' / GREY 2520			AR	AR	
32	506228	TAPE RUB ADH1 CC POL 1/4" x 1/2" x 37.5' / GREY 2520X			AR	AR	
33	683447	ADHESIVE SIKATACK PLUS / BLACK / 23 Liters			AR	AR	
40	293433	GLASS, THERMOS 13% / CENTER / 1287MM			1		
41	**Y2-1854-91**	**SIDE PANELS - "SLIDE-OUT"**					
		S) WITH 65MM BLOCK OFF LOWER 55 FULL + 10 DOT					
		W) WITH 80MM BLOCK OFF LOWER 70 FULL + 10 DOT					

From Y-7046 To 6-8901		Date:07/2024	PAGE:Y2-1886-00
POWER WINDOW - ELECTRICAL INSTALLATION			

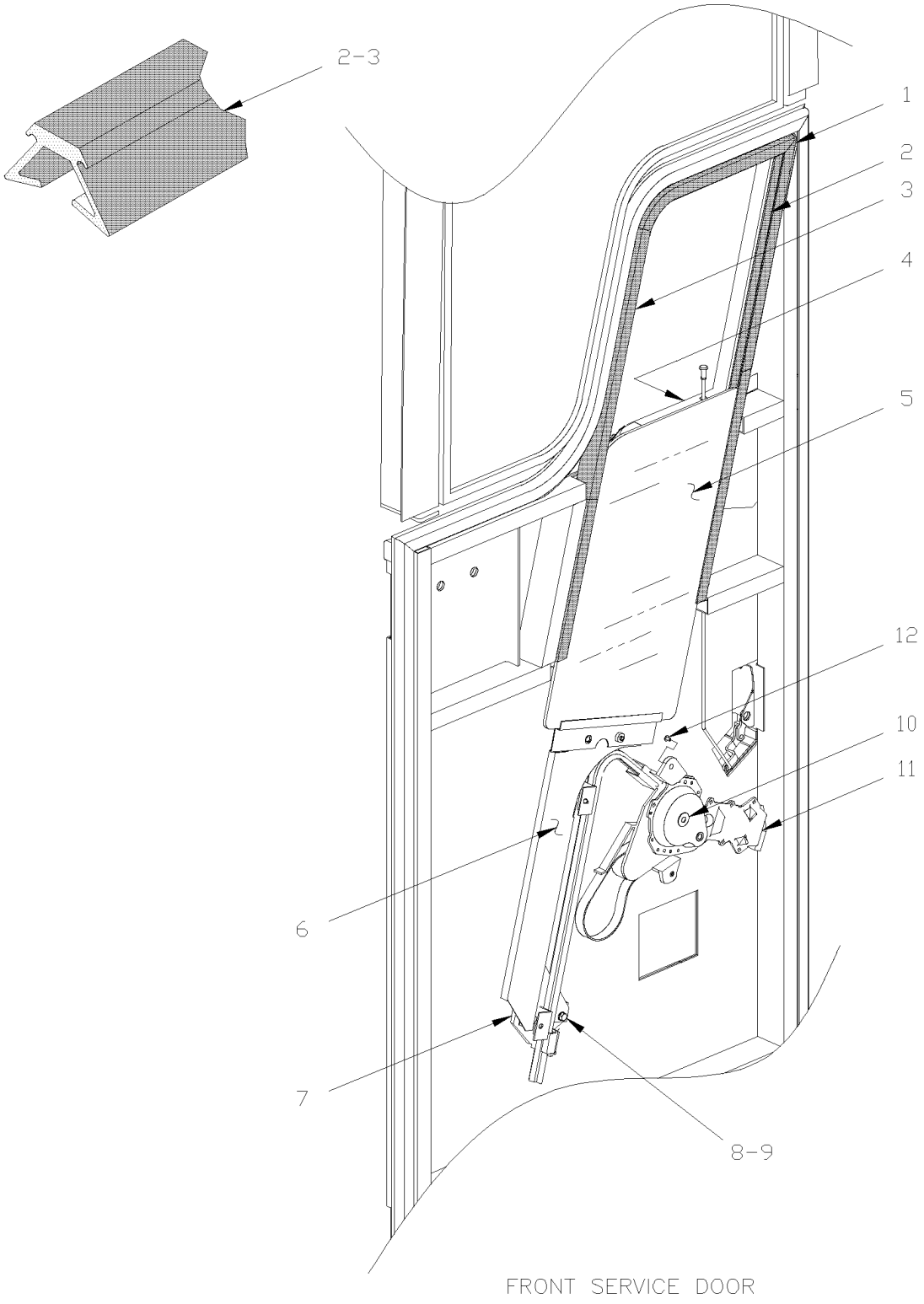

From Y-7046 To 6-8901		Date:07/2024	PAGE:Y2-1886-00
POWER WINDOW - ELECTRICAL INSTALLATION			

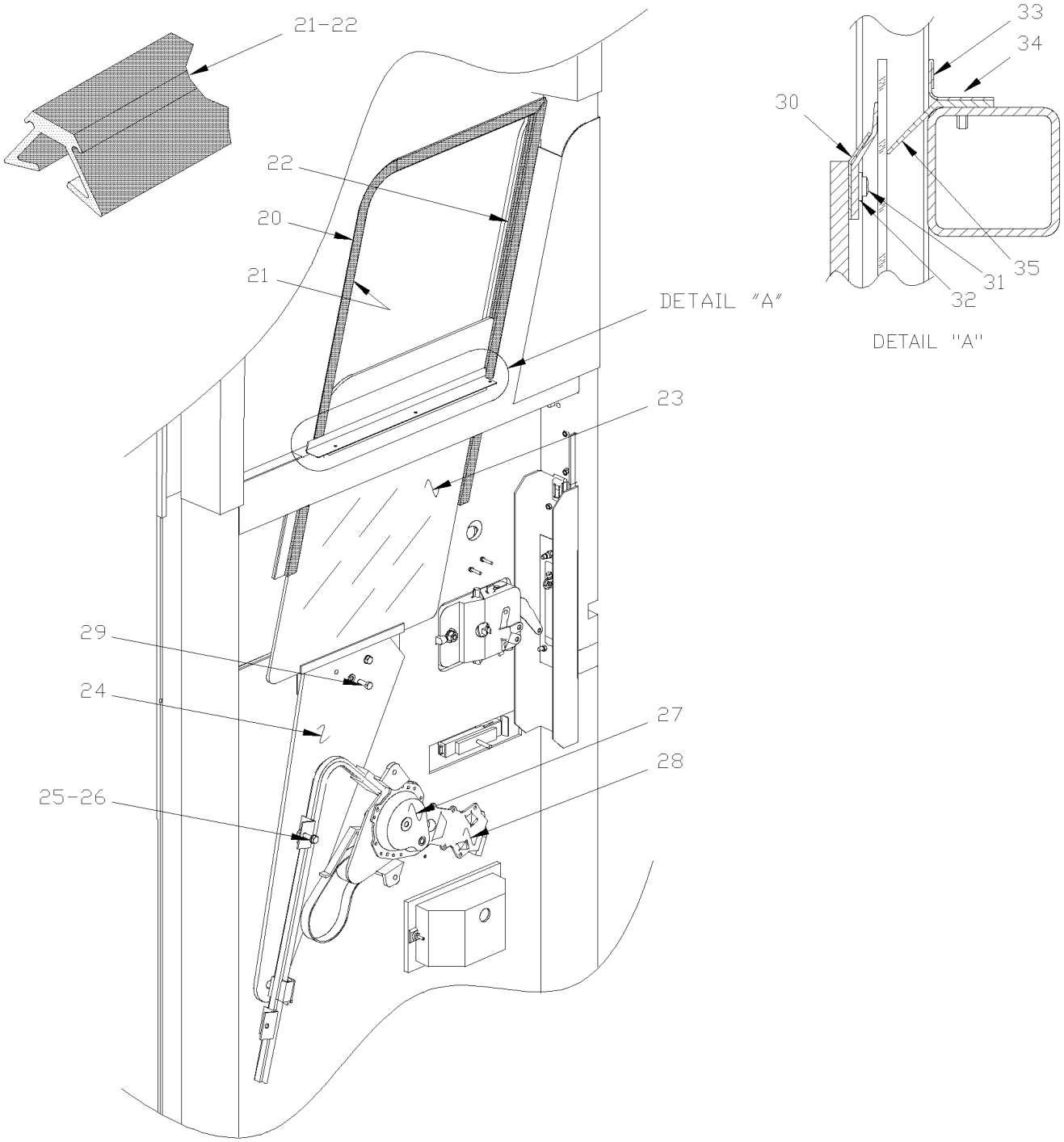

ENTRANCE DOOR – MTH

From Y-7046 To 6-8901		Date:07/2024	PAGE:Y2-1886-00

POWER WINDOW - ELECTRICAL INSTALLATION

Item#	Part	Description	XLII 45	XLII MTH40	XLII MTH45	XLII MTH45E	NOTES
1	285983	WINDOW TRACK	1	1	1	1	
2	286440	FELT SLIDING 677MM	1	1	1	1	
3	286439	FELT SLIDING 930MM	1	1	1	1	
4	286419	FLAP SEAL / 25MM x 260MM	2	2	2	2	
5	286212	GLASS ASSY W/SUPPORT	1	1	1	1	
6	286087	DIAGONNAL SUPPORT	1	1	1	1	
6	287908	DIAGONNAL SUPPORT / 89" ONLY				1	
7	299048	PLATE, ANCHOR	1	1	1	1	
8	5001181	SCREW CAP HEX M6-1.0x12 SS	2	2	2	2	
9	502570	WASHER LO SPT 6.1x11.8x1.6 SS	2	2	2	2	
10	286415	MOTOR & REGULATOR ASSY	1	1	1	1	
11	790336	. MOTOR ASSY / 12V / WINDOW R	1	1	1	1	
11	197925	. MOTOR ASSY / 12V / WINDOW R	1	1	1	1	
12	5001182	NUT HEX NYRT M6-1.0 SS	4	4	4	4	
20	293088	MOULDING		1	1	1	
21	293211	FELT SLIDING 923MM		1	1	1	
22	293210	FELT SLIDING 597MM		1	1	1	
23	286196	GLASS ASSY W/SUPPORT		1	1	1	
24	286138	SUPPORT PLASTIC		1	1	1	
24	286738	SUPPORT PLASTIC / MTH 89" ONLY				1	
25	502622	SCREW CAP HEX M6-1.0x20 SS BK		4	4	4	
26	502573	WASHER FL 6.4x12.5x1.6 SS		4	4	4	
27	286193	MOTOR & REGULATOR ASSY		1	1	1	
28	790336	. MOTOR ASSY / 12V / WINDOW R		1	1	1	
28	197925	. MOTOR ASSY / 12V / WINDOW R		1	1	1	
29	502806	SCREW MA FL PH M6-1.0x10 Z050		2	2	2	
30	286993	FLAP SEAL GLASS ASSY		1	1	1	
30	286992	. FLAP SUPPORT		1	1	1	
30	286235	. FLAP SEAL 3/4" x 7/8" / PVC / 335MM To 2-7799		1	1	1	
30	288063	. FLAP SEAL / W/FLOCKING 37.6MM x 335MM From 2-7800		1	1	1	
31	955223	SCREW CAP HEX M4-0.7x6 G8.8 ZP		4	4	4	
32	500989	WASHER FL .219x.875x.062 Z050		4	4	4	
33	286717	JOINT SUPPORT 345MM SS		1	1	1	
34	500124	SCREW TP TR PH #8x1/2 SS		3	3	3	
35	286235	FLAP SEAL 3/4" x 7/8" / PVC / 335MM To 2-7799		3	3	3	
35	288063	FLAP SEAL / W/FLOCKING 37.6MM x 335MM From 2-7800		1	1	1	
40	680066	ADHESIVE / ADBOND #5014 / 23.6ML BOTTLE		AR	AR	AR	

From 6-8902 To 8-9339		Date:07/2024	PAGE:Y2-1886-01
POWER WINDOW - ELECTRICAL INSTALLATION			

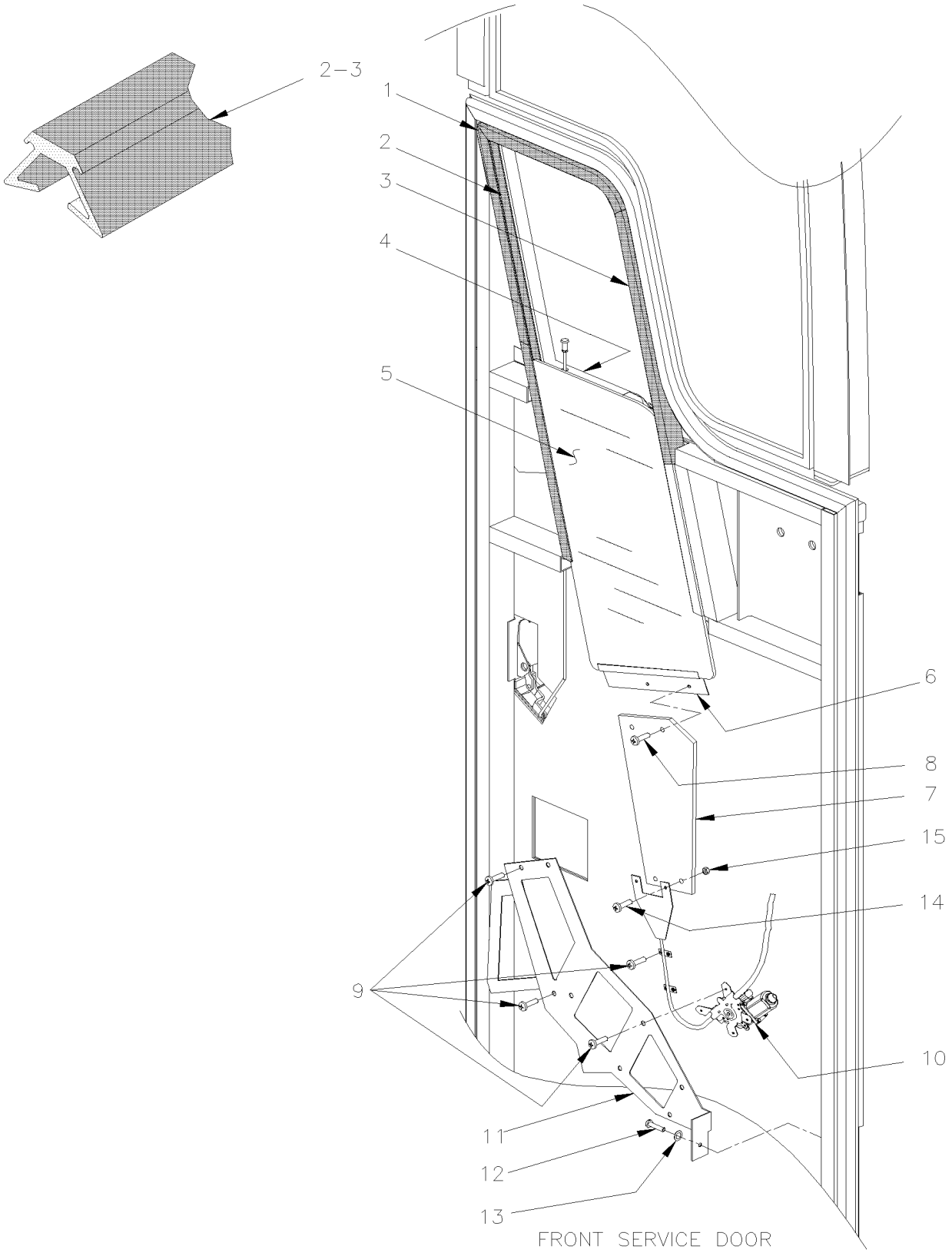

From 6-8902 To 8-9339		Date:07/2024	PAGE:Y2-1886-01
POWER WINDOW - ELECTRICAL INSTALLATION			

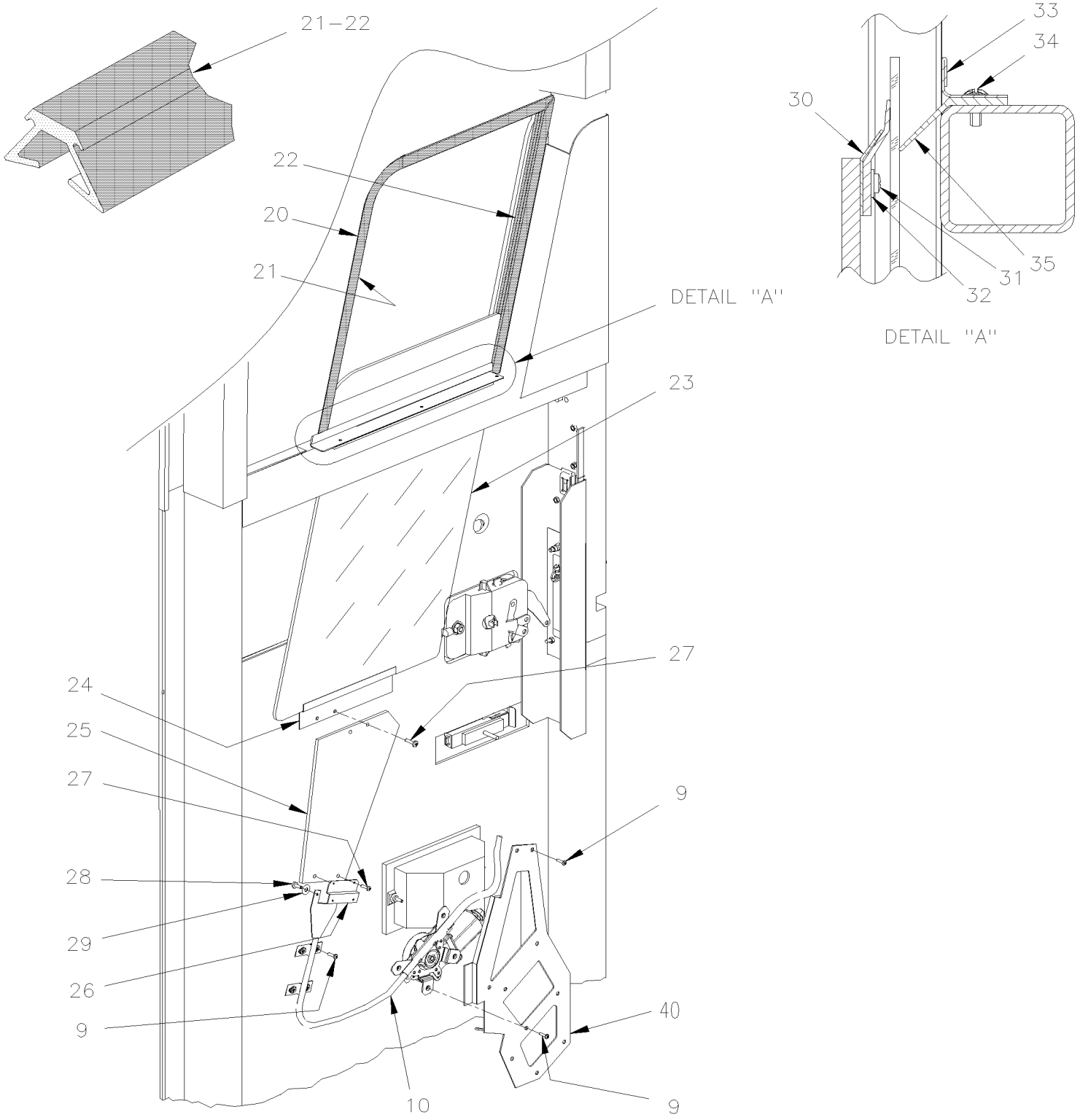

ENTRANCE DOOR – MTH

From 6-8902 To 8-9339		Date:07/2024	PAGE:Y2-1886-01

POWER WINDOW - ELECTRICAL INSTALLATION

Item#	Part	Description	XLII 45	XLII MTH40	XLII MTH45	XLII MTH45E	NOTES
		THIS POWER WINDOW FIT ALSO ON MTH-40' FOR SERVICE					
1	285983	WINDOW TRACK	1	1	1	1	
2	286440	FELT SLIDING 677MM	1	1	1	1	
3	286439	FELT SLIDING 930MM	1	1	1	1	
4	286419	FLAP SEAL / 25MM x 260MM	2	2	2	2	
5	286212	GLASS ASSY W/SUPPORT	1	1	1	1	
6	293194	. SUPPORT ASSY	1	1	1	1	
7	293852	SUPPORT TRANSITION PLASTIC	1	1	1	1	
7	293857	SUPPORT TRANSITION PLASTIC / MTH 89" ONLY				1	
8	5001633	SCREW MA FL PH M6-1.0x12 Z050	2	2	2	2	
9	500541	SCREW MA FL PH 1/4-20x1/2 SS BK	8	8	8	8	
10	790500	MOTOR & REGULATOR ASSY / SERIES "XL-II"	1	1	1	1	
11	293856	SUPPORT MOTOR SERVICE DOOR / BUS To 6-8906	1				
11	293850	SUPPORT MOTOR SERVICE DOOR / MTH 86" & 89"			1	1	
12	502857	WASHER LO SERR 8.2x26.3x1.8 N500	1	1	1	1	
13	5001433	SCREW CAP HEX M6-1.0x25 SS	1	1	1	1	
14	955271	SCREW CAP HEX M6-1.0x16 G8.8 ZG603	2	2	2	2	
15	5001182	NUT HEX NYRT M6-1.0 SS	2	2	2	2	
20	293088	MOULDING			1	1	
21	293211	FELT SLIDING 923MM			1	1	
22	293210	FELT SLIDING 597MM			1	1	
23	286196	GLASS ASSY W/SUPPORT			1	1	
24	299049	. SUPPORT ASSY			1	1	
25	293849	SUPPORT TRANSITION PLASTIC / MTH 86"			1	1	
25	293861	SUPPORT TRANSITION PLASTIC / MTH 89" ONLY				1	
26	293845	ATTACHMENT ASSY W/NUTS WINDOW "Z" SHAPE			1	1	
27	5001633	SCREW MA FL PH M6-1.0x12 Z050			4	4	
28	5001181	SCREW CAP HEX M6-1.0x12 SS			2	2	
29	502570	WASHER LO SPT 6.1x11.8x1.6 SS			2	2	
30	286993	FLAP SEAL GLASS ASSY			1	1	
30	286992	. FLAP SUPPORT			1	1	
30	288063	. FLAP SEAL / W/FLOCKING 37.6MM x 335MM			1	1	
31	955223	SCREW CAP HEX M4-0.7x6 G8.8 ZP			4	4	
32	500989	WASHER FL .219x.875x.062 Z050			4	4	
33	286717	JOINT SUPPORT 345MM SS			1	1	
34	500124	SCREW TP TR PH #8x1/2 SS			3	3	
35	288063	FLAP SEAL / W/FLOCKING 37.6MM x 335MM			1	1	
36	502622	SCREW CAP HEX M6-1.0x20 SS BK			4	4	
36	502573	WASHER FL 6.4x12.5x1.6 SS			4	4	
39	502806	SCREW MA FL PH M6-1.0x10 Z050			2	2	

From 6-8902 To 8-9339		Date:07/2024	PAGE:Y2-1886-01

POWER WINDOW - ELECTRICAL INSTALLATION

Item#	Part	Description	XLII 45	XLII MTH40	XLII MTH45	XLII MTH45E	NOTES
40	293848	SUPPORT MOTOR ENTRANCE DOOR / MTH 86" & 89"			1	1	
NS	680066	ADHESIVE / ADBOND #5014 / 23.6ML BOTTLE	AR	AR	AR	AR	
50	685072	THREAD LOCKER LOCTITE #243 / BLUE / 5ml	AR	AR	AR	AR	
NS	293873	KIT, RETROFIT ELECTRICAL DOOR WINDOW / SERIES "XL-II" To 6-8901			1	1	
. NS	IS-05010	. SEE INSTRUCTION SHEET To 6-8901			1	1	
NS	293874	KIT, RETROFIT ELECTRICAL DRIVER'S WINDOW / SERIES "XL-II" To 6-8901	1	1	1	1	
. NS	IS-05010	. SEE INSTRUCTION SHEET To 6-8901	1	1	1	1	
NS	563664	CONNECTOR "MUNCY" To 6-8901	1	1	1	1	
50	563623	BUTT SPLICE / 16-14 / BLUE / W/THERMORETRAC / PANDUIT BSH14-Q To 6-8901	2	2	2	2	

From Y-7046 To 8-9339		Date:07/2024	PAGE:Y2-1890-00
ROOF STRUCTURE			

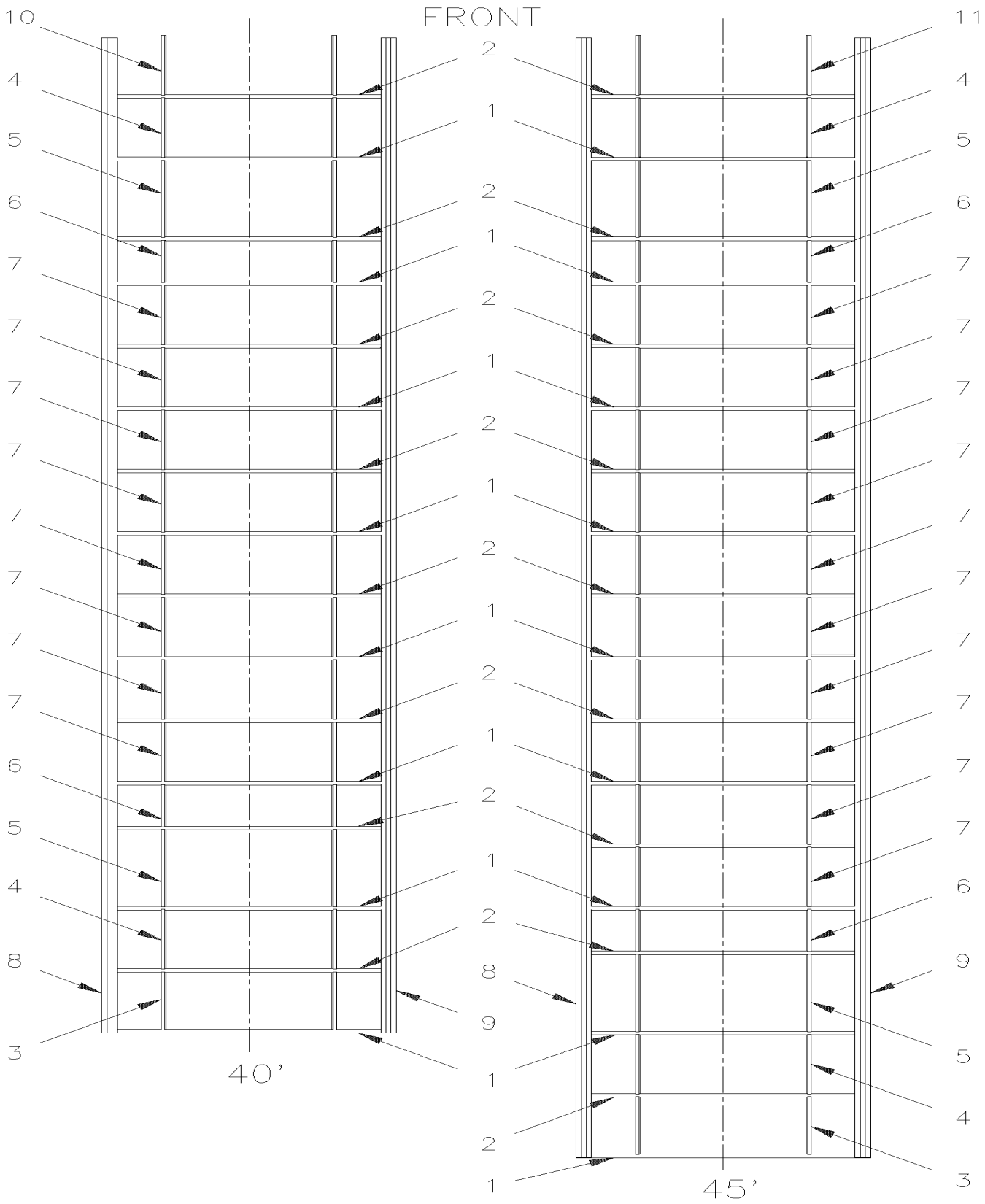

From Y-7046 To 8-9339		Date:07/2024	PAGE:Y2-1890-00

ROOF STRUCTURE

Item#	Part	Description	XLII 45	XLII MTH40	XLII MTH45	XLII MTH45E	NOTES
1	271290	ARCH / ROOF 1932.7MM (76") To 3-7990		8			
1	271290	ARCH / ROOF 1932.7MM (76") To 3-7990	9		9	9	
1	271634	ARCH / ROOF 1932.7MM (76") From 3-7991 To 5-8813		8			
1	271634	ARCH / ROOF 1932.7MM (76") From 3-7991	9		9	9	
2	271291	ARCH / ROOF 1932.7MM (76") To 1-7265		8			
2	271420	ARCH / ROOF 1932.7MM (76") From 1-7266		8			
2	271635	ARCH / ROOF 1932.7MM (76") From 3-7991 To 5-8813		8			
2	271291	ARCH / ROOF 1932.7MM (76") To 1-7265	9		9	9	
2	271420	ARCH / ROOF 1932.7MM (76") From 1-7266	9		9	9	
3	271074	FORM / BETWEEN ARCH 600.6MM (23.63") To 3-7990	2	2	2	2	
3	271613	FORM / BETWEEN ARCH 600.6MM (23.64") From 3-7991	2	2	2	2	
4	271073	FORM / BETWEEN ARCH 619.6MM (24.39") To 3-7990	4	4	4	4	
4	271612	FORM / BETWEEN ARCH 619.6MM (24.39") From 3-7991	4	4	4	4	
5	271082	FORM / BETWEEN ARCH 802.0MM (31.57") To 3-7990	4	4	4	4	
5	271615	FORM / BETWEEN ARCH 802.0MM (31.57") From 3-7991	4	4	4	4	
6	271081	FORM / BETWEEN ARCH 37.3MM (17.21") To 3-7990	4	4	4	4	
6	271614	FORM / BETWEEN ARCH 437.3MM (17.21") From 3-7991	4	4	4	4	
7	271156	FORM / BETWEEN ARCH 619.6MM (24.39") To 3-7990		16			
7	271156	FORM / BETWEEN ARCH 619.6MM (24.39") To 3-7990	20		20	20	
7	271616	FORM / BETWEEN ARCH 619.6MM (24.39") From 3-7991 To 5-8813		16			
7	271616	FORM / BETWEEN ARCH 619.6MM (24.39") From 3-7991	20		20	20	
8	271168	ROOF L.H. CORNER ASSY To 5-8813		1			
8	271170	ROOF L.H. CORNER ASSY	1		1	1	
9	271167	ROOF R.H. CORNER ASSY To 5-8813		1			
9	271169	ROOF R.H. CORNER ASSY	1		1	1	
10	271151	FORM / BETWEEN ARCH / L.H. 595.5MM (23.42") To 3-7990	1	1	1	1	
10	271611	FORM / BETWEEN ARCH / L.H. 595.5MM (23.42") From 3-7991	1	1	1	1	
11	271223	FORM / BETWEEN ARCH / R.H. 595.5MM (23.42") To 3-7990	1	1	1	1	
11	271610	FORM / BETWEEN ARCH / R.H. 595.5MM (23.42") From 3-7991	1	1	1	1	

From Y-7046 To 8-9339		Date:07/2024	PAGE:Y2-1890-10
STRUCTURE WALL - UPPER			

FRONT

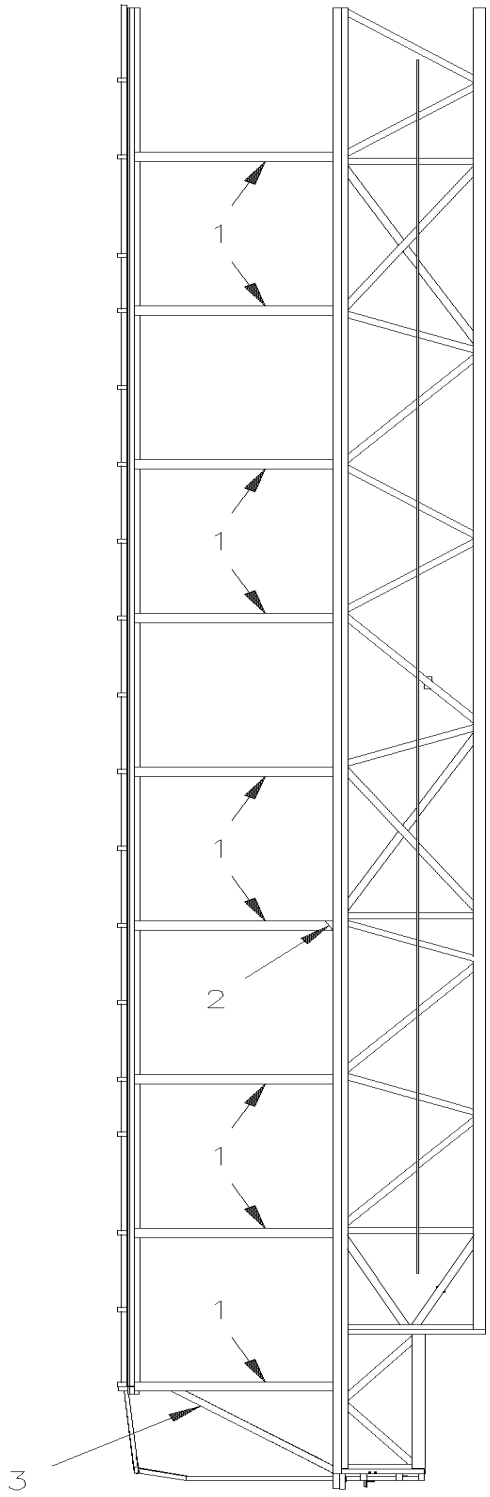

BUS

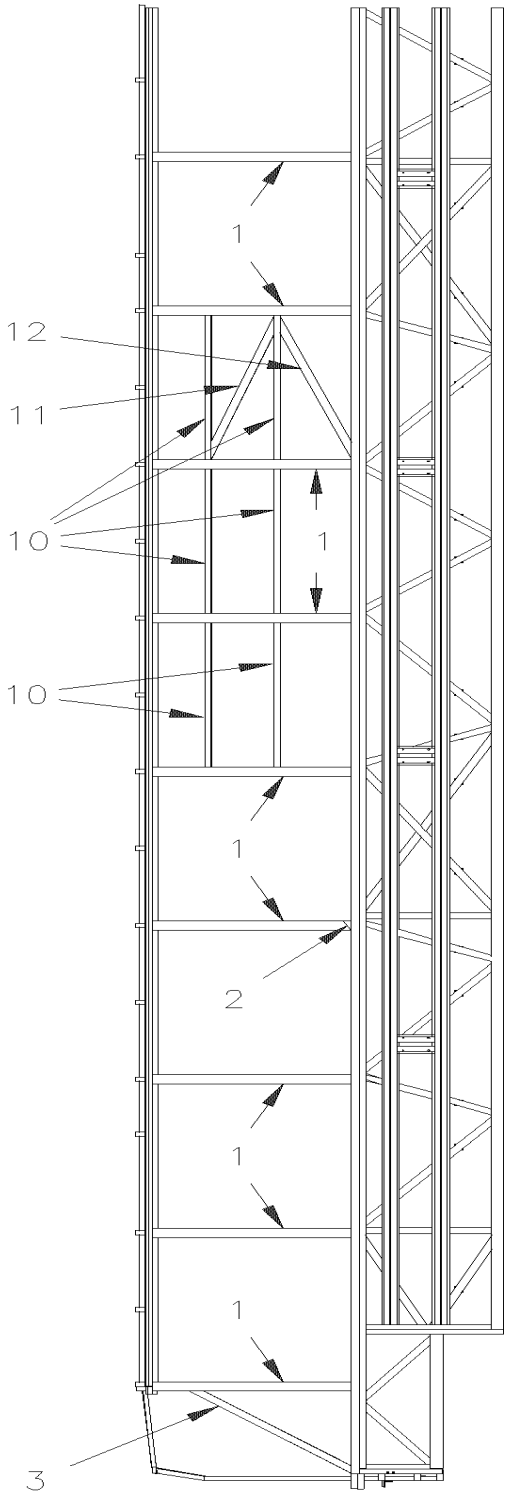

MTH

From Y-7046 To 8-9339		Date:07/2024	PAGE:Y2-1890-10

STRUCTURE WALL - UPPER

Item#	Part	Description	XLII 45	XLII MTH40	XLII MTH45	XLII MTH45E	NOTES
1	271264	POST BUS & MTH 83"	18		18		
1	271264	POST BUS & MTH 83" To Y-7128		16			
1	271263	POST MTH 86" To 5-8813		16			
1	271263	POST MTH 86"			18	18	
1	271265	POST MTH 89"				16	
1	271265	POST MTH 89"			18	18	
2	271130	REINFORCEMENT				16	
2	271130	REINFORCEMENT	18		18	18	
3	260772	REINFORCEMENT L.H.	1	1	1	1	
3	260773	REINFORCEMENT R.H.	1	1	1	1	
10	271133	TUBE / STD BETWEEN WINDOW POST 1219MM (47.99")		AR	AR	AR	
11	271191	TUBE		AR	AR	AR	
12	271190	TUBE		AR	AR	AR	
12	271380	TUBE MTH 89"		AR	AR	AR	

From Y-7046 To 6-8906		Date:07/2024	PAGE:Y2-1891-00
LOWER WALL STRUCTURE - BUS			

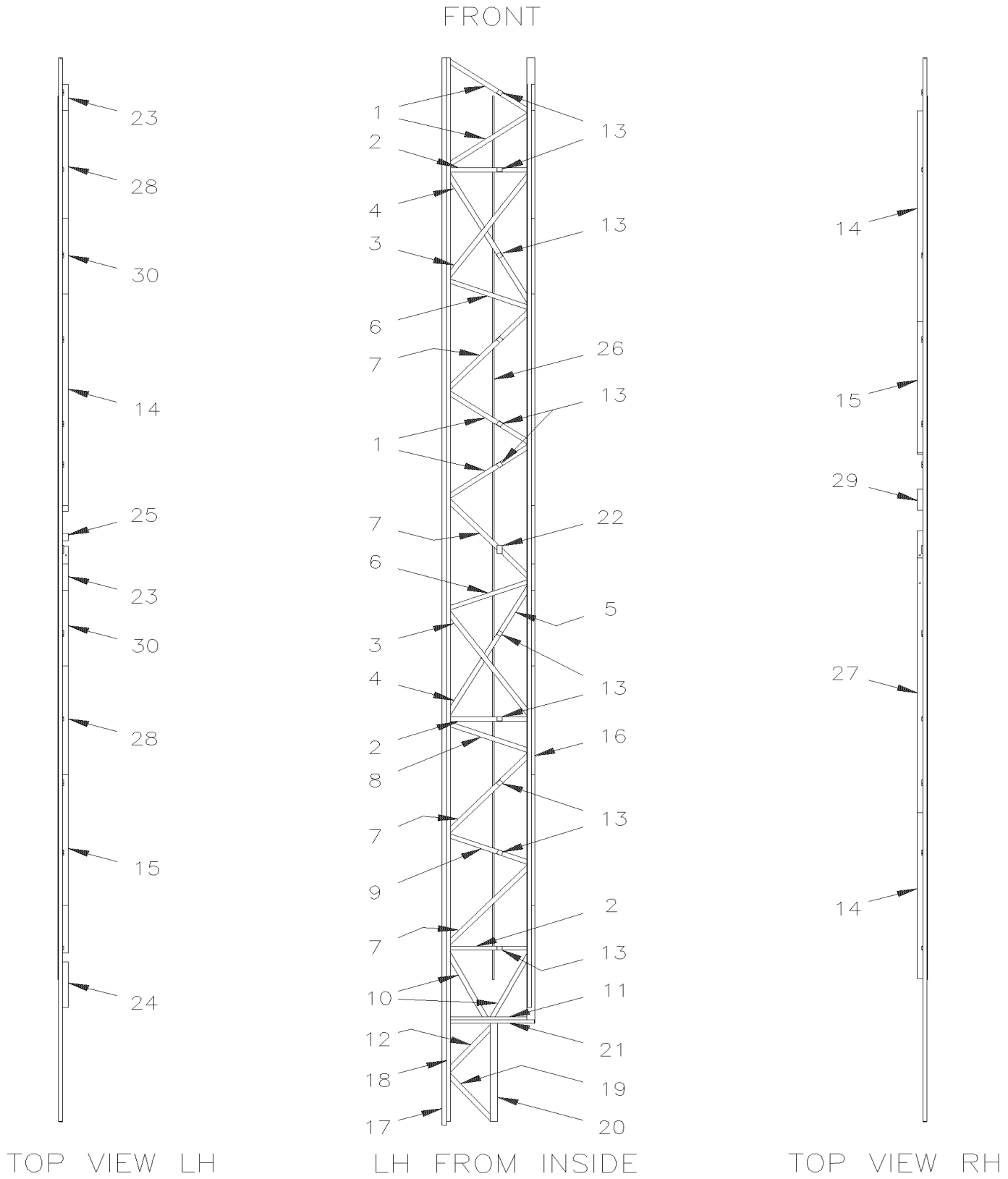

From Y-7046 To 6-8906		Date:07/2024	PAGE:Y2-1891-00

LOWER WALL STRUCTURE - BUS

Item#	Part	Description	XLII 45	XLII MTH40	XLII MTH45	XLII MTH45E	NOTES
1	231364	TUBE	4				
2	231366	TUBE	3				
3	231367	TUBE	2				
4	231368	TUBE	2				
5	231369	TUBE	2				
6	231370	TUBE	2				
7	231371	TUBE	4				
8	231372	TUBE	1				
9	231373	TUBE	1				
10	231374	TUBE	2				
11	231577	TUBE	1				
12	231377	TUBE	1				
13	231469	SUPPORT SINGLE	11				
14	231222	ANGLE	1				
15	231319	ANGLE	1				
16	231460	TUBE	AR				
17	231458	TUBE	AR				
18	231459	TUBE	AR				
19	231454	TUBE	1				
20	231215	TUBE	1				
21	231242	TUBE ASSY	1				
22	231470	DOUBLE SUPPORT	1				
23	231248	ANGLE	2				
24	231241	ANGLE	1				
25	231353	ANGLE	1				
26	231298	TUBE	AR				
27	231246	ANGLE	1				
28	231354	ANGLE	2				
29	231247	ANGLE	1				
30	231276	ANGLE	2				

From Y-7046 To 5-8813		Date:07/2024	PAGE:Y2-1891-50
LOWER WALL STRUCTURE - MTH 40'			

FRONT

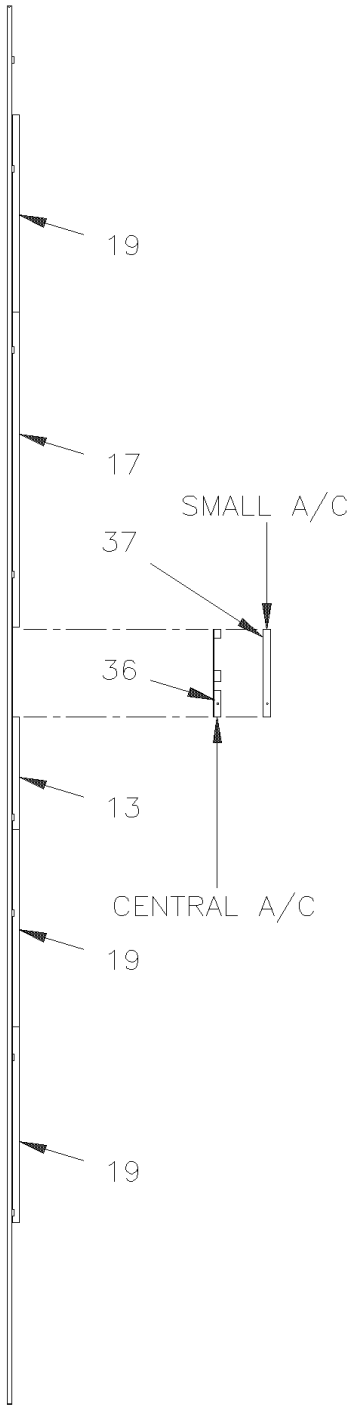

TOP VIEW LH

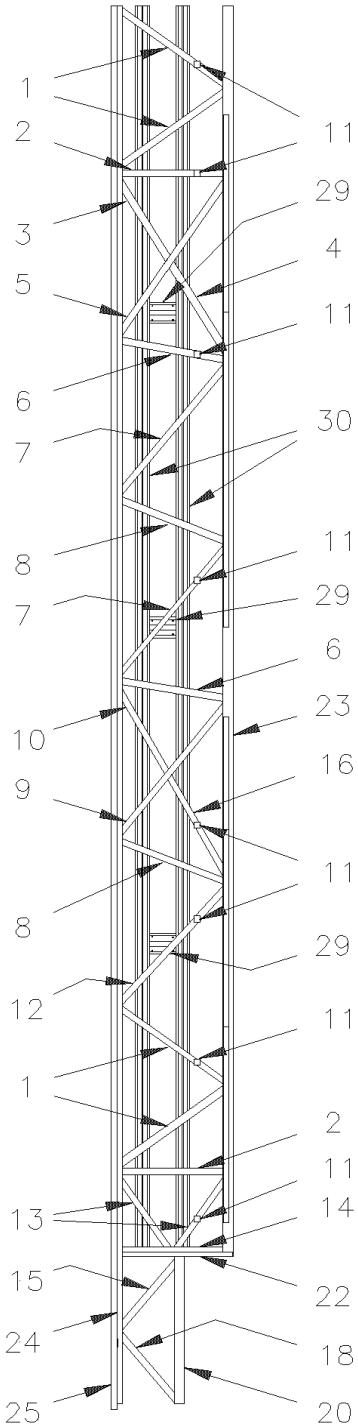

LH FROM INSIDE

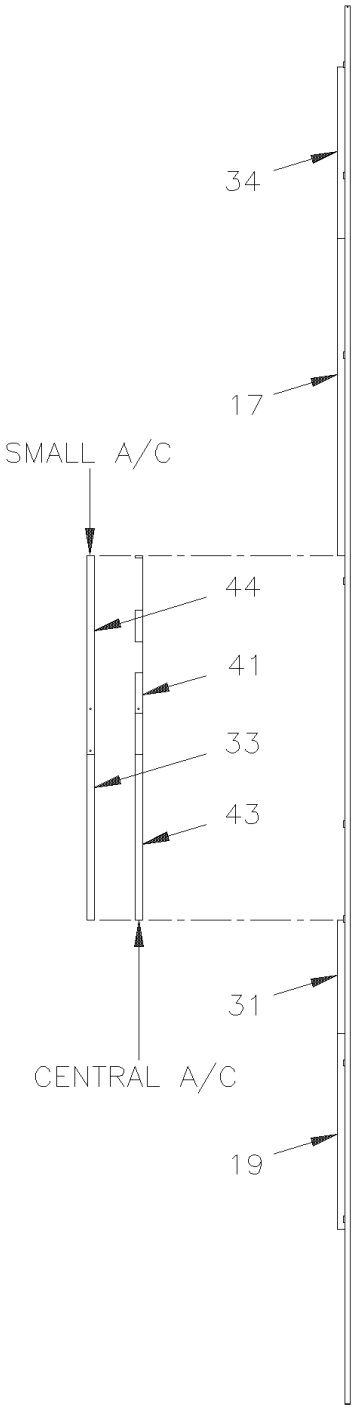

TOP VIEW RH

From Y-7046 To 5-8813		Date:07/2024	PAGE:Y2-1891-50
LOWER WALL STRUCTURE - MTH 40'			

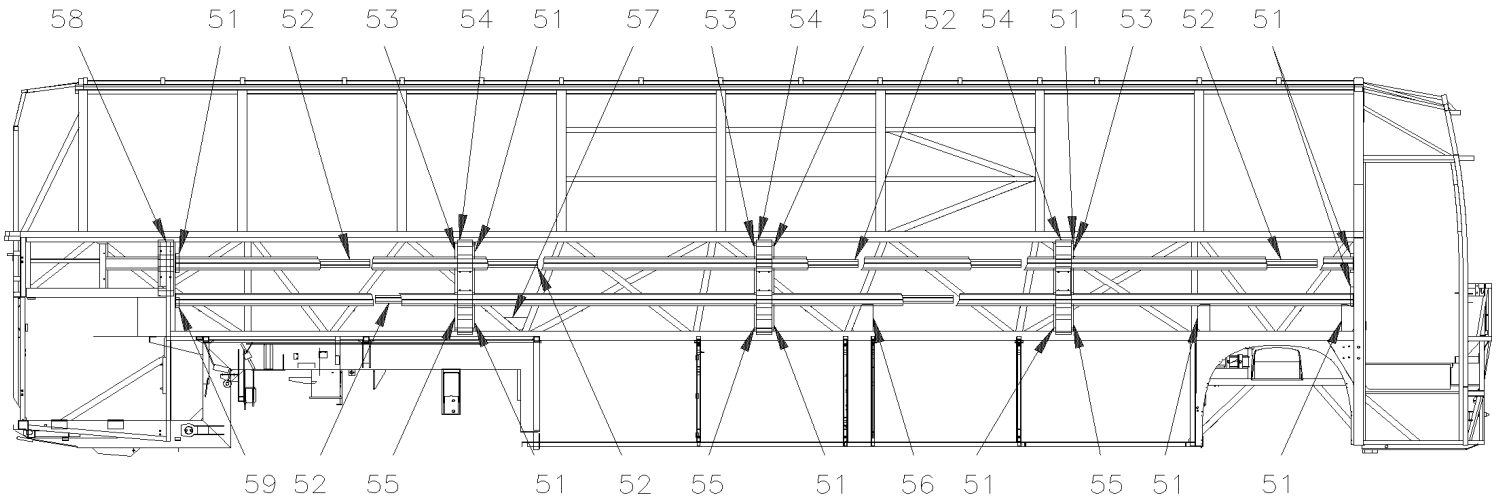

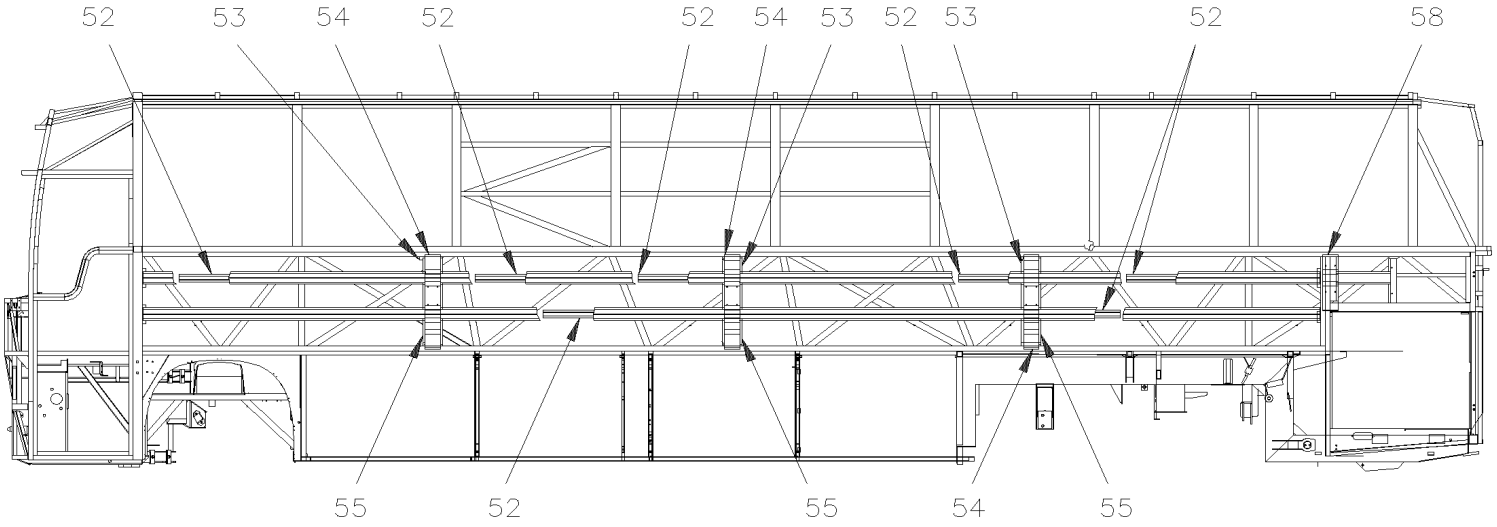

From Y-7046 To 5-8813		Date:07/2024	PAGE:Y2-1891-50

LOWER WALL STRUCTURE - MTH 40'

Item#	Part	Description	XLII 45	XLII MTH40	XLII MTH45	XLII MTH45E	NOTES
1	231200	TUBE		4			
2	231201	TUBE		2			
3	231356	TUBE		1			
4	231357	TUBE		1			
5	231202	TUBE		1			
6	231358	TUBE		2			
7	231359	TUBE		2			
8	231206	TUBE		2			
9	231360	TUBE		1			
10	231361	TUBE		1			
11	231217	FASTENER		8			
12	231207	TUBE		1			
13	231363	TUBE		2			
14	231209	TUBE		1			
15	231210	TUBE		1			
16	231362	TUBE		1			
17	231222	ANGLE		1			
18	231414	TUBE		1			
19	231319	ANGLE		1			
20	231215	TUBE		1			
22	231225	VERTICAL TUBE ASSY		1			
23	231457	TUBE		AR			
24	231456	TUBE		AR			
25	231455	TUBE		AR			
29	231272	CENTRAL FORM		3			
30	231490	HORIZONTAL FORM		AR			
31	231276	ANGLE		1			
33	231354	ANGLE		1			
34	231492	ANGLE		1			
36	231353	ANGLE		1			
37	231244	ANGLE		1			
41	231247	ANGLE		1			
43	231354	ANGLE		1			
44	231245	ANGLE		1			
51	231489	ANGLE 28.6MM X 28.6MM X 160MM		8			
52	231275	REINFORCEMENT		10			
53	231274	UPPER FORM		6			
54	473867	PANEL JUNCTION / S.B. To 5-8468		6			
54	477610	PANEL JUNCTION / B.A. From 5-8469		6			
55	231273	LOWER FORM		6			
56	231504	ANCHOR PLATE / "ZIPDEE"		1			
57	231502	ANCHOR PLATE / "ZIPDEE"		1			

From Y-7046 To 5-8813		Date:07/2024	PAGE:Y2-1891-50

LOWER WALL STRUCTURE - MTH 40'

Item#	Part	Description	XLII 45	XLII MTH40	XLII MTH45	XLII MTH45E	NOTES
58	473868	PANEL JUNCTION / S.B. To 5-8468		4			
58	477611	PANEL JUNCTION / B.A. From 5-8469		4			
59	231508	BRACKET		2			

From Y-7046 To 1-7631		Date:07/2024	PAGE:Y2-1891-55
LOWER WALL STRUCTURE - MTH 45' ENT 86"			

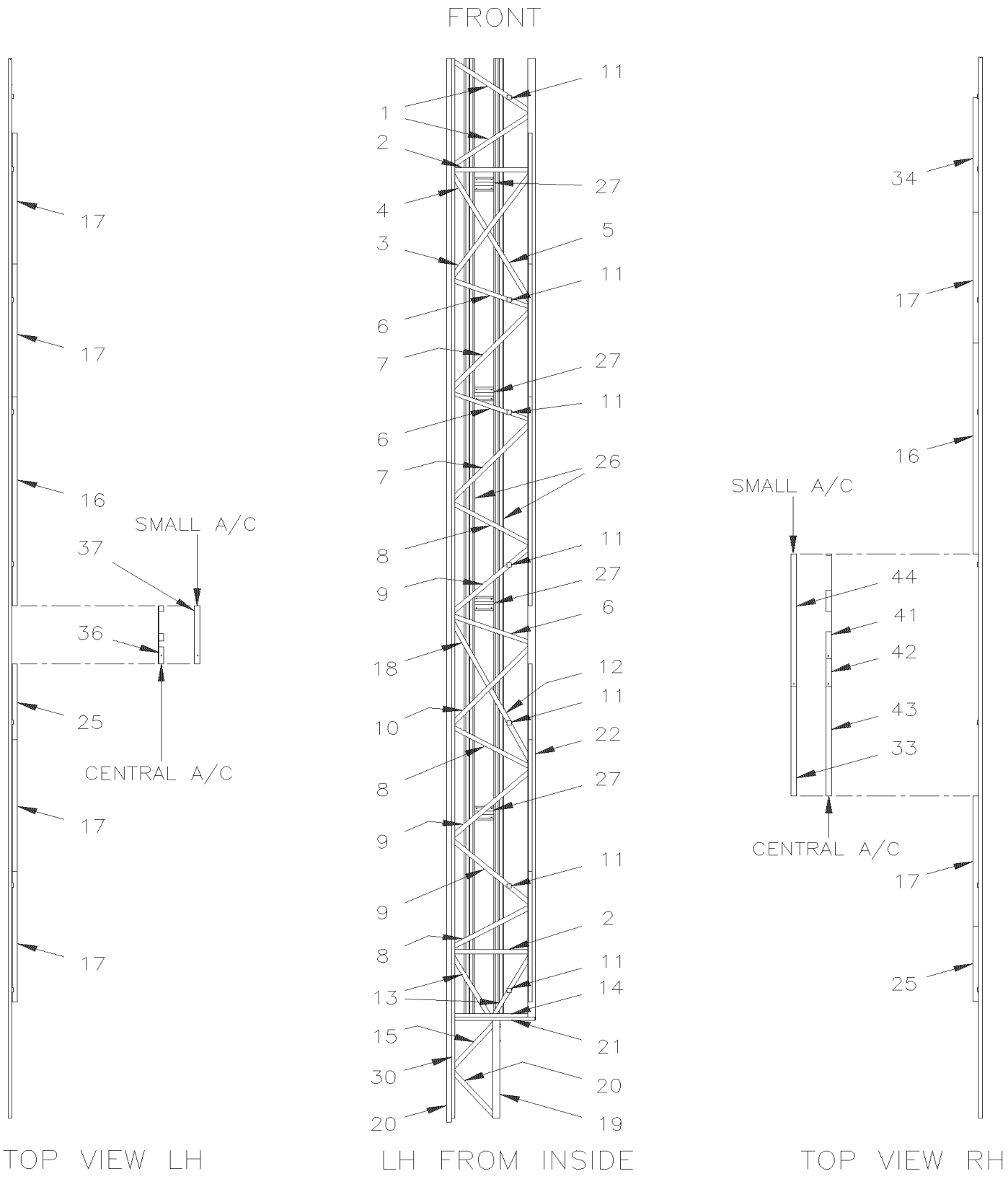

From Y-7046 To 1-7631		Date:07/2024	PAGE:Y2-1891-55

LOWER WALL STRUCTURE - MTH 45' ENT 86"

Item#	Part	Description	XLII 45	XLII MTH40	XLII MTH45	XLII MTH45E	NOTES
1	231200	TUBE				2	
2	231201	TUBE				2	
3	231202	TUBE				1	
4	231203	TUBE				1	
5	231204	TUBE				1	
6	231206	TUBE				3	
7	231207	TUBE				2	
8	231313	TUBE				3	
9	231314	TUBE				3	
10	231315	TUBE				1	
11	231217	FASTENER				8	
12	231317	TUBE				1	
13	231318	TUBE				2	
14	231209	TUBE				1	
15	231210	TUBE				1	
16	231222	ANGLE				2	
17	231319	ANGLE				4	
18	231316	TUBE				1	
19	231215	TUBE				1	
20	231458	TUBE				AR	
21	231459	TUBE				AR	
22	231460	TUBE				AR	
25	231276	ANGLE				1	
26	231488	HORIZONTAL FORM				1	
27	231272	CENTRAL FORM				4	
28	231460	TUBE				AR	
30	231459	TUBE				AR	
33	231354	ANGLE				1	
34	231492	ANGLE				1	
36	231353	ANGLE				1	
37	231244	ANGLE				1	
41	231247	ANGLE				1	
42	231277	ANGLE				1	
43	231354	ANGLE				1	
44	231245	ANGLE				1	

From Y-7046 To 8-9339		Date:07/2024	PAGE:Y2-1891-56
LOWER WALL STRUCTURE - MTH 45' ENT 89"			

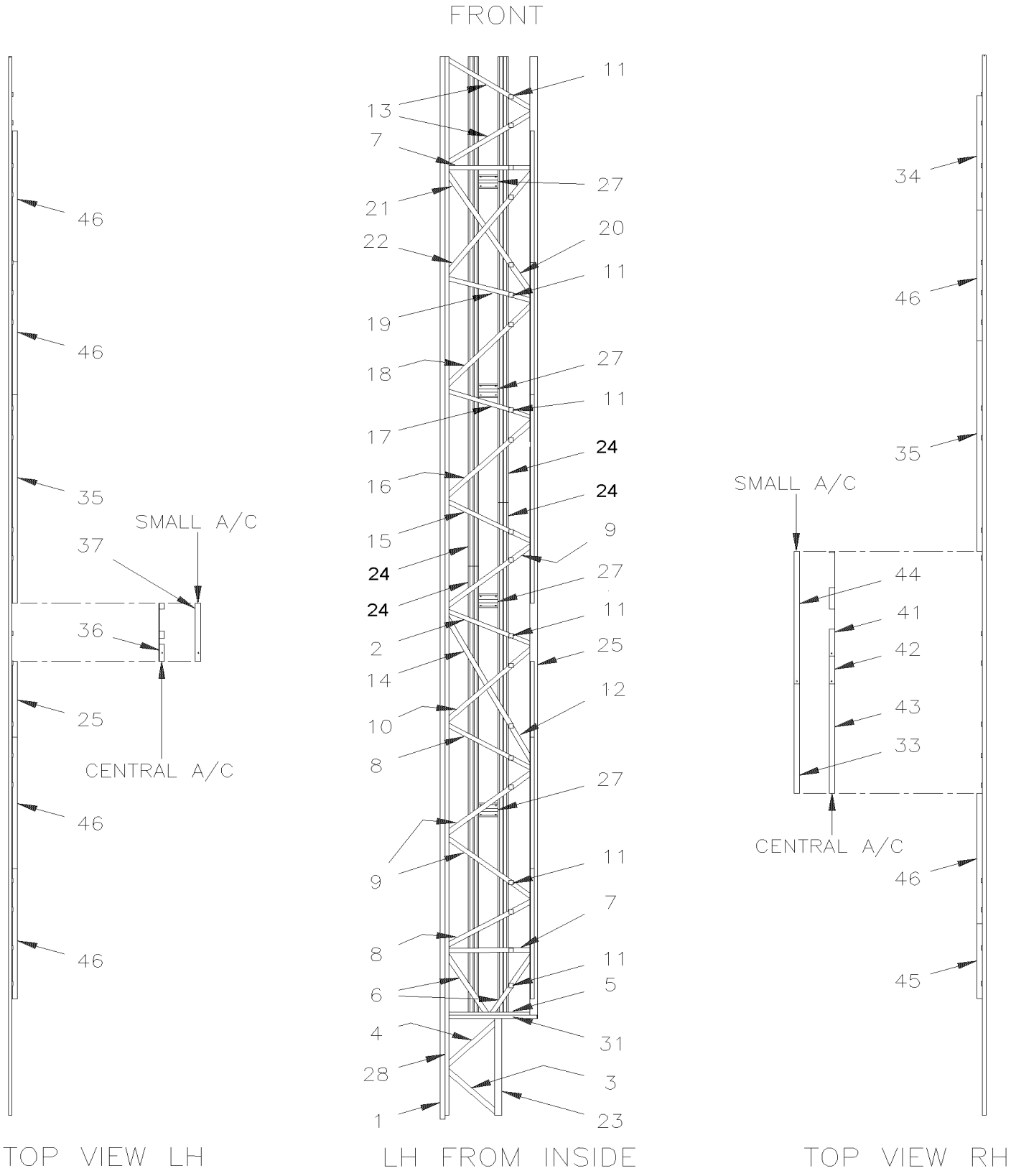

From Y-7046 To 8-9339		Date:07/2024	PAGE:Y2-1891-56

LOWER WALL STRUCTURE - MTH 45' ENT 89"

Item#	Part	Description	XLII 45	XLII MTH40	XLII MTH45	XLII MTH45E	NOTES
1	231458	TUBE				AR	
2	231426	TUBE				1	
3	231417	TUBE				1	
4	231418	TUBE				1	
5	231525	TUBE				1	
6	231421	TUBE				2	
7	231422	TUBE				2	
8	231423	TUBE				2	
9	231424	TUBE				3	
10	231425	TUBE				1	
11	231217	FASTENER				8	
12	231428	TUBE				1	
13	231429	TUBE				2	
14	231427	TUBE				1	
15	231430	TUBE				1	
16	231431	TUBE				1	
17	231432	TUBE				1	
18	231433	TUBE				1	
19	231434	TUBE				1	
20	231435	TUBE				1	
21	231436	TUBE				1	
22	231437	TUBE				1	
23	231215	TUBE				1	
24	231488	HORIZONTAL FORM				AR	
25	231460	TUBE				AR	
27	231272	CENTRAL FORM				4	
28	231459	TUBE				1	
31	231212	TUBE ASSY				1	
33	231354	ANGLE				1	
34	231492	ANGLE				1	
35	231222	ANGLE				2	
36	231353	ANGLE				1	
37	231244	ANGLE				1	
41	231247	ANGLE				1	
42	231277	ANGLE				1	
43	231354	ANGLE				1	
44	231245	ANGLE				1	
45	231276	ANGLE				1	
46	231319	ANGLE				4	

From Y-7046 To 8-9339		Date:07/2024	PAGE:Y2-1891-60
LOWER WALL STRUCTURE - MTH 45'			

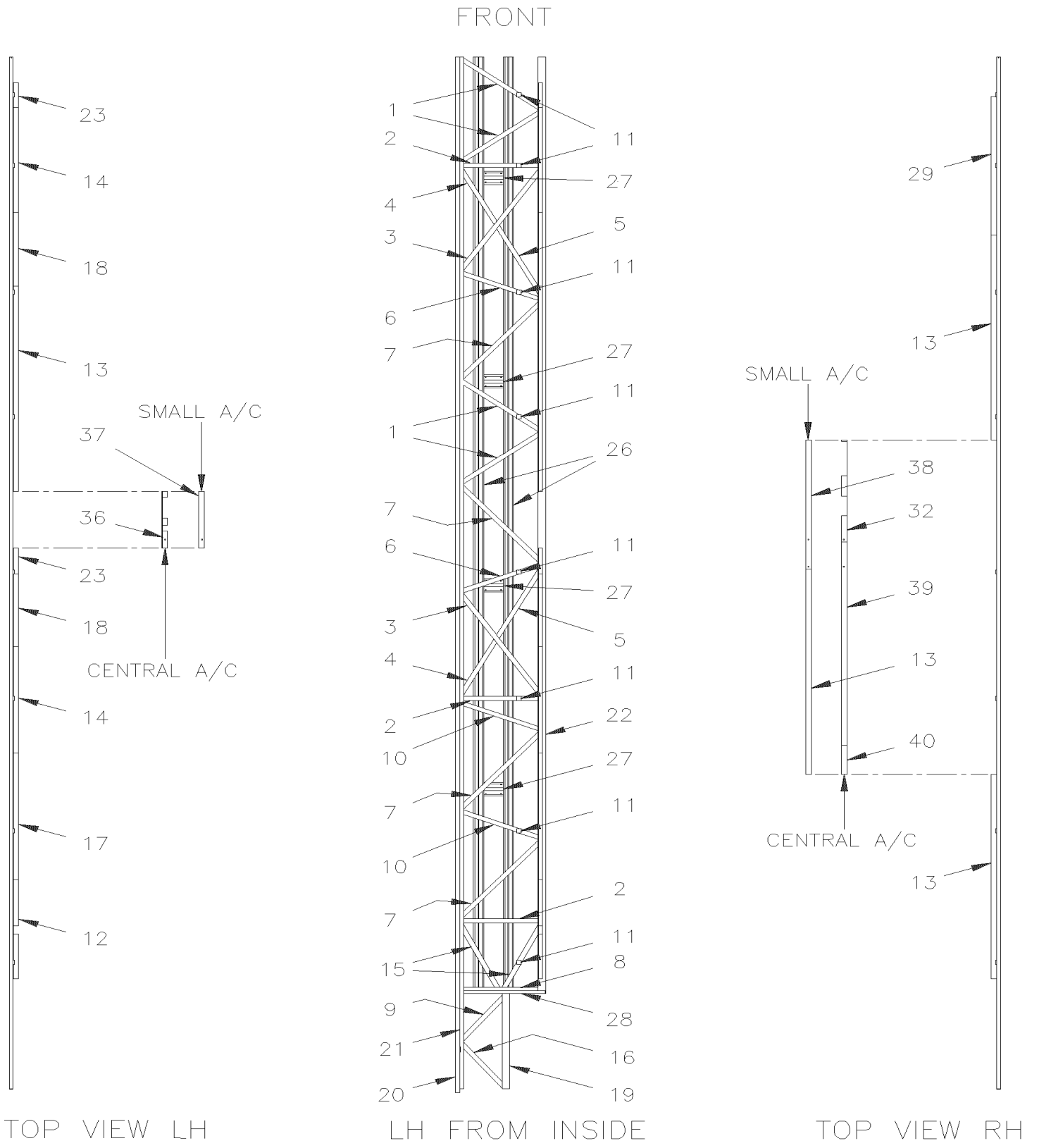

From Y-7046 To 8-9339		Date:07/2024	PAGE:Y2-1891-60
LOWER WALL STRUCTURE - MTH 45'			

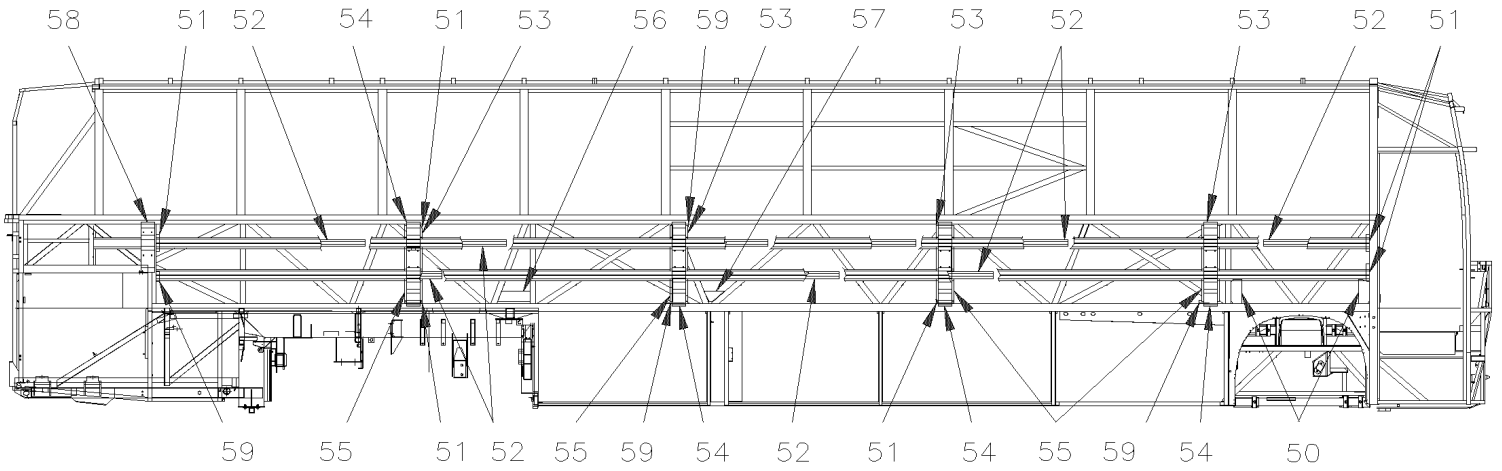

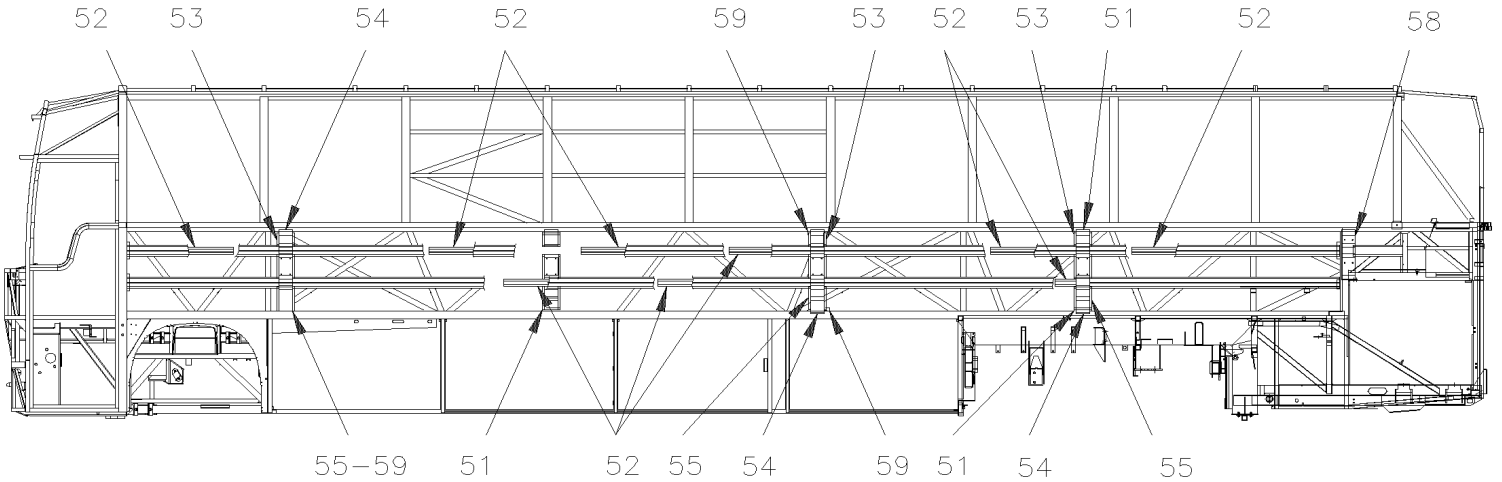

From Y-7046 To 8-9339		Date:07/2024	PAGE:Y2-1891-60

LOWER WALL STRUCTURE - MTH 45'

Item#	Part	Description	XLII 45	XLII MTH40	XLII MTH45	XLII MTH45E	NOTES
1	231200	TUBE			4		
1	231571	TUBE			4		A
2	231201	TUBE			3		
2	231516	TUBE			3		A
3	231202	TUBE			2		
3	231515	TUBE			2		A
4	231203	TUBE			2		
4	231511	TUBE			2		A
5	231204	TUBE			2		
5	231512	TUBE			2		A
6	231206	TUBE			2		
6	231513	TUBE			2		A
7	231207	TUBE			4		
7	231572	TUBE			4		A
8	231568	TUBE			1		
9	231210	TUBE			1		
10	231208	TUBE			2		
10	231574	TUBE			2		A
11	231217	FASTENER			8		
11	231248	ANGLE			2		A
12	231241	ANGLE			1		
13	231222	ANGLE			1		
14	231276	ANGLE			2		
14	231354	ANGLE			1		A
15	231223	TUBE			2		
15	231515	TUBE			2		A
16	231414	TUBE			1		
17	231319	ANGLE			1		
18	231354	ANGLE			2		
18	231276	ANGLE			1		A
19	231215	TUBE			1		
20	231458	TUBE			AR		
21	231459	TUBE			AR		
22	231460	TUBE			AR		
23	231248	ANGLE			2		
26	231488	HORIZONTAL FORM			AR		
27	231272	CENTRAL FORM			4		
28	231225	VERTICAL TUBE ASSY			1		
29	231491	ANGLE			1		
32	231247	ANGLE			1		
36	231353	ANGLE			1		
37	231244	ANGLE			1		

From Y-7046 To 8-9339		Date:07/2024	PAGE:Y2-1891-60

LOWER WALL STRUCTURE - MTH 45'

Item#	Part	Description	XLII 45	XLII MTH40	XLII MTH45	XLII MTH45E	NOTES
38	231245	ANGLE			1		
39	231246	ANGLE			1		
40	231277	ANGLE			1		
50	231501	ANCHOR PLATE / "ZIPDEE"			2		
51	231489	ANGLE 28.6MM X 28.6MM X 160MM			8		
52	231275	REINFORCEMENT			10		
53	231274	UPPER FORM			8		
54	473867	PANEL JUNCTION / S.B. To 5-8468			8		
54	477610	PANEL JUNCTION / B.A. From 5-8469			8		
55	231273	LOWER FORM			8		
56	231503	ANCHOR PLATE			1		
57	231502	ANCHOR PLATE / "ZIPDEE"			1		
58	473868	PANEL JUNCTION / S.B. To 5-8468			2		
58	477611	PANEL JUNCTION / B.A. From 5-8469			2		
59	231508	BRACKET			4		
		A) WITH SLIDE OUT					

From Y-7046 To 6-8906		Date:07/2024	PAGE:Y2-1893-00
BAGGAGE COMPARTMENT STRUCTURE			

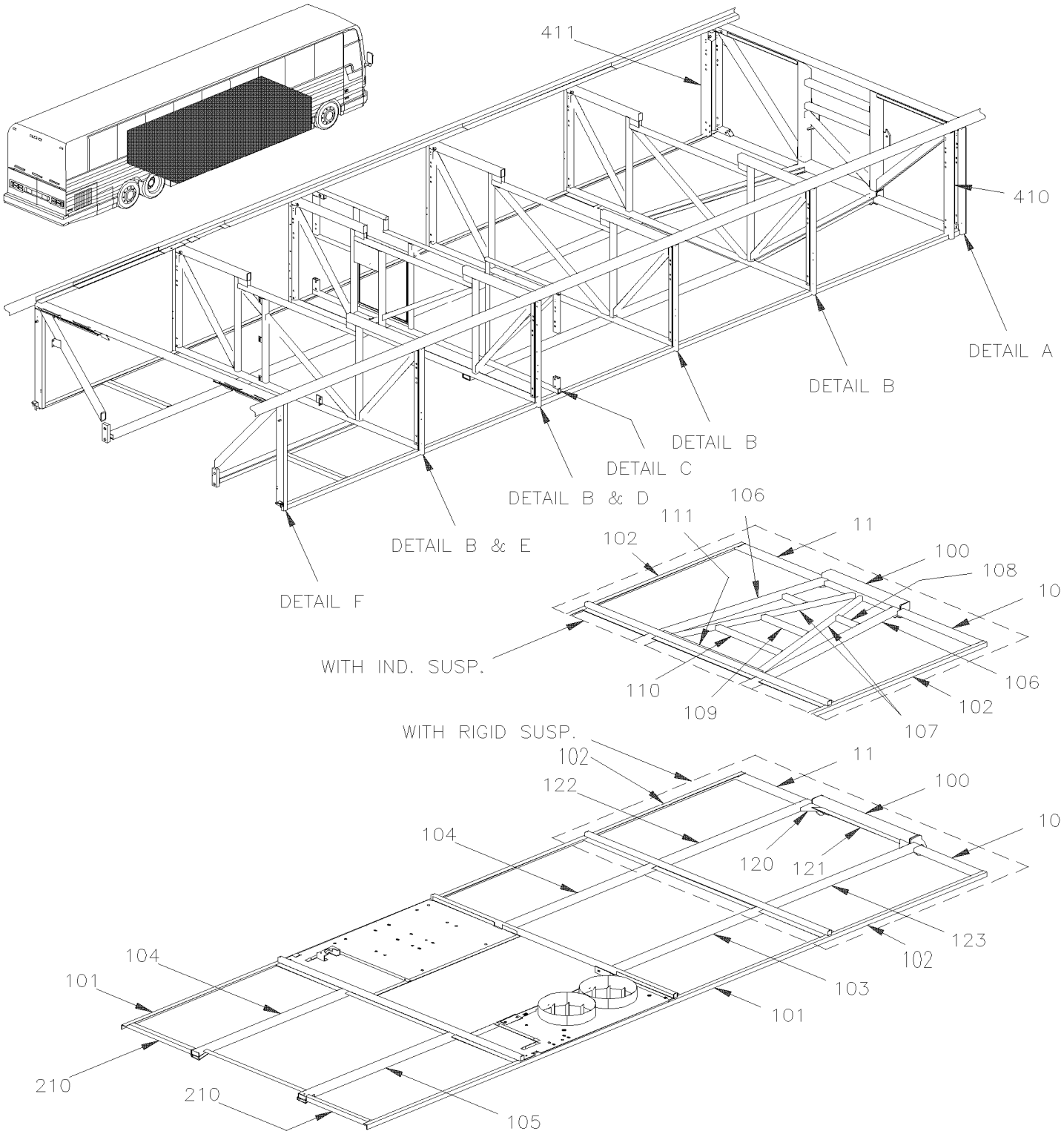

From Y-7046 To 6-8906		Date:07/2024	PAGE:Y2-1893-00
BAGGAGE COMPARTMENT STRUCTURE			

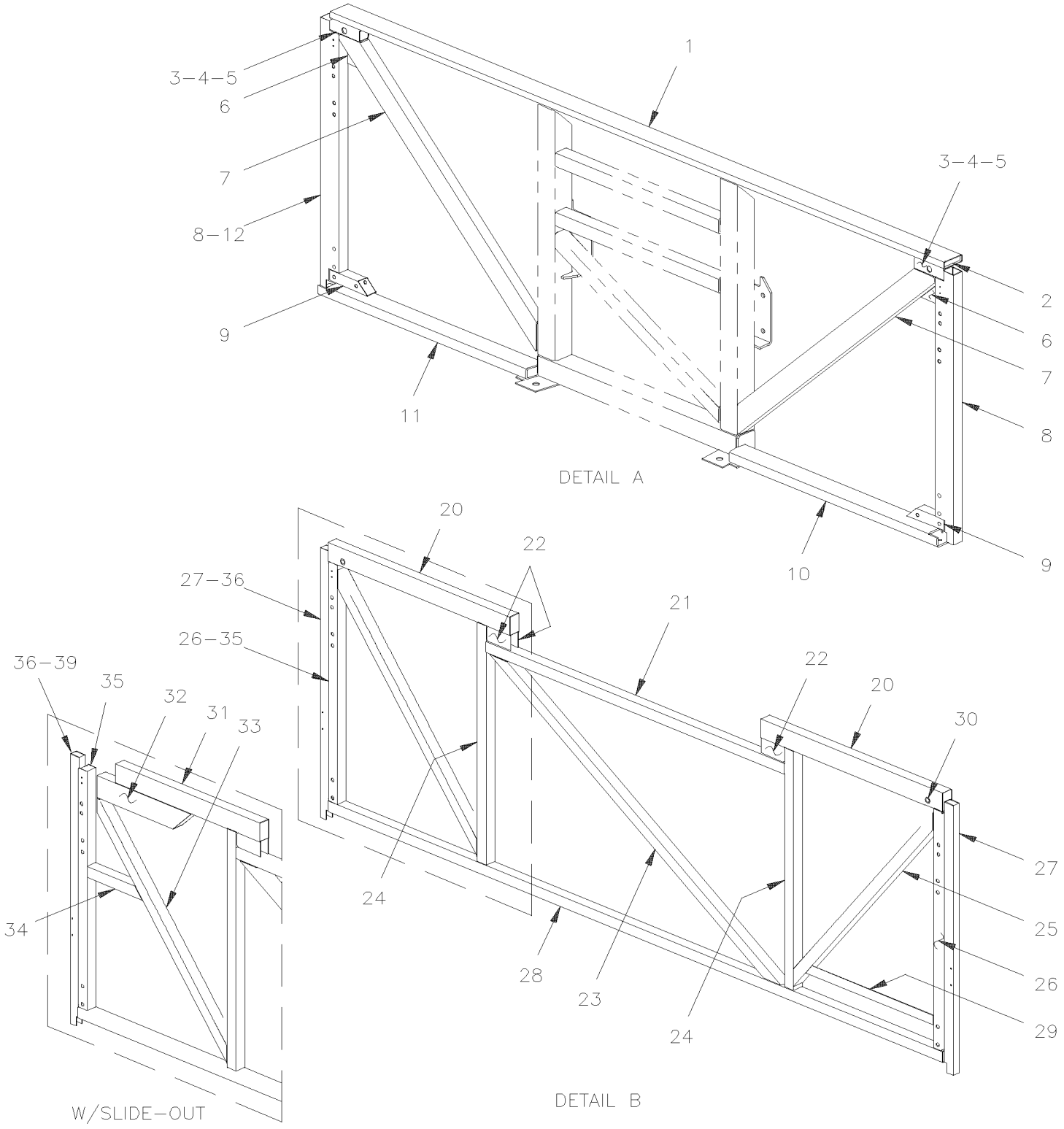

From Y-7046 To 6-8906		Date:07/2024	PAGE:Y2-1893-00
BAGGAGE COMPARTMENT STRUCTURE			

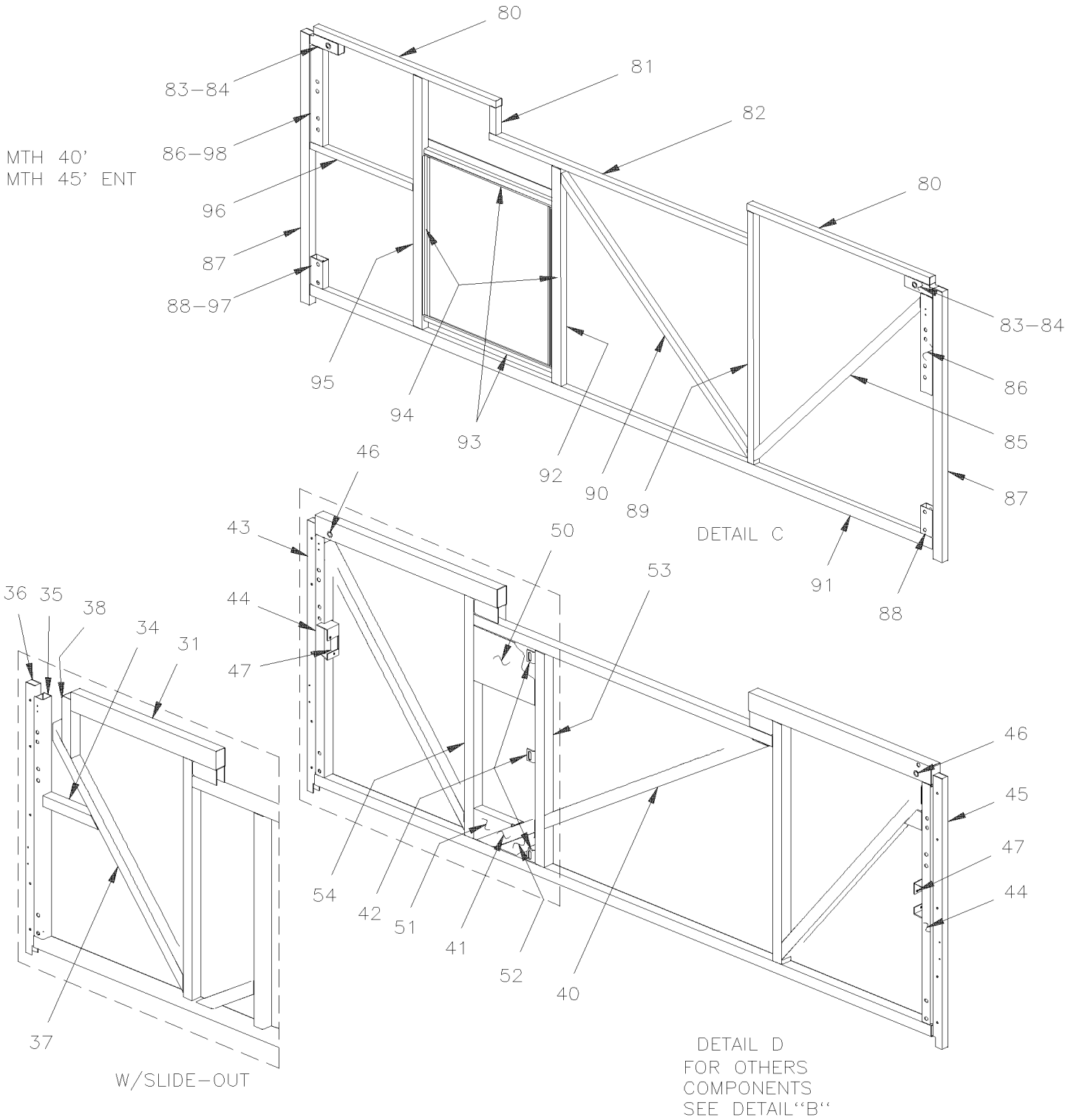

From Y-7046 To 6-8906		Date:07/2024	PAGE:Y2-1893-00
BAGGAGE COMPARTMENT STRUCTURE			

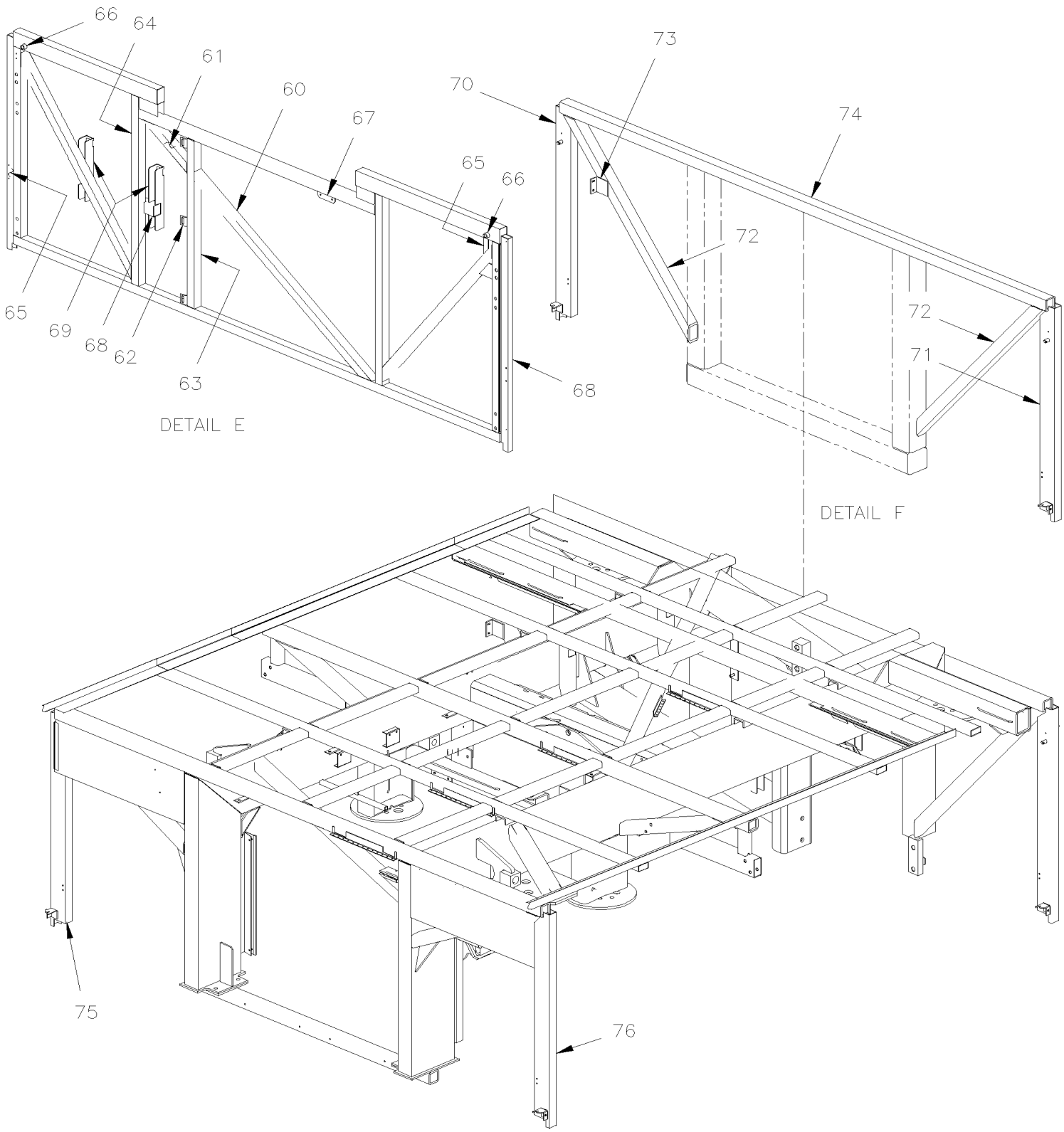

From Y-7046 To 6-8906		Date:07/2024	PAGE:Y2-1893-00
BAGGAGE COMPARTMENT STRUCTURE			

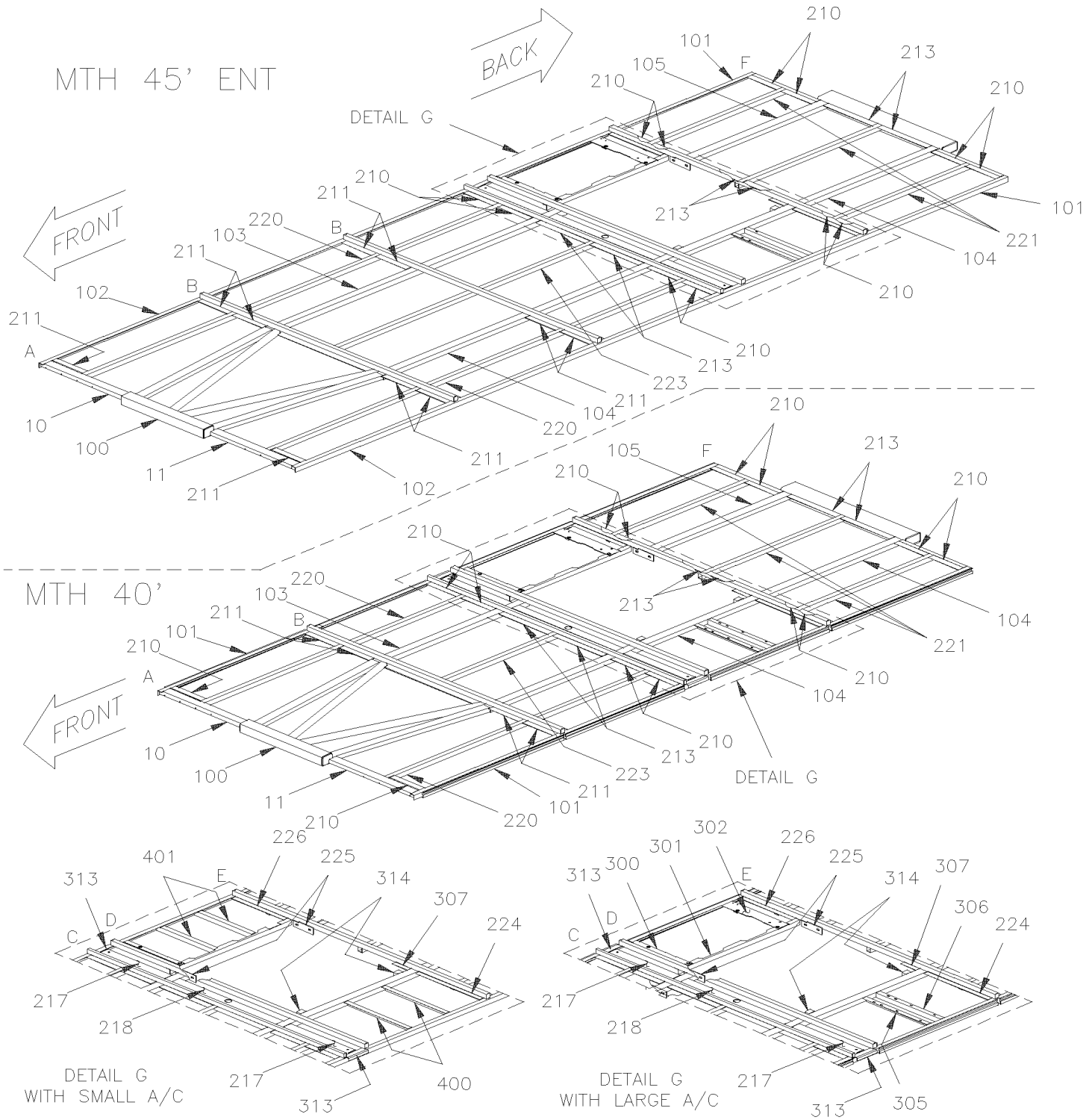

From Y-7046 To 6-8906		Date:07/2024	PAGE:Y2-1893-00
BAGGAGE COMPARTMENT STRUCTURE			

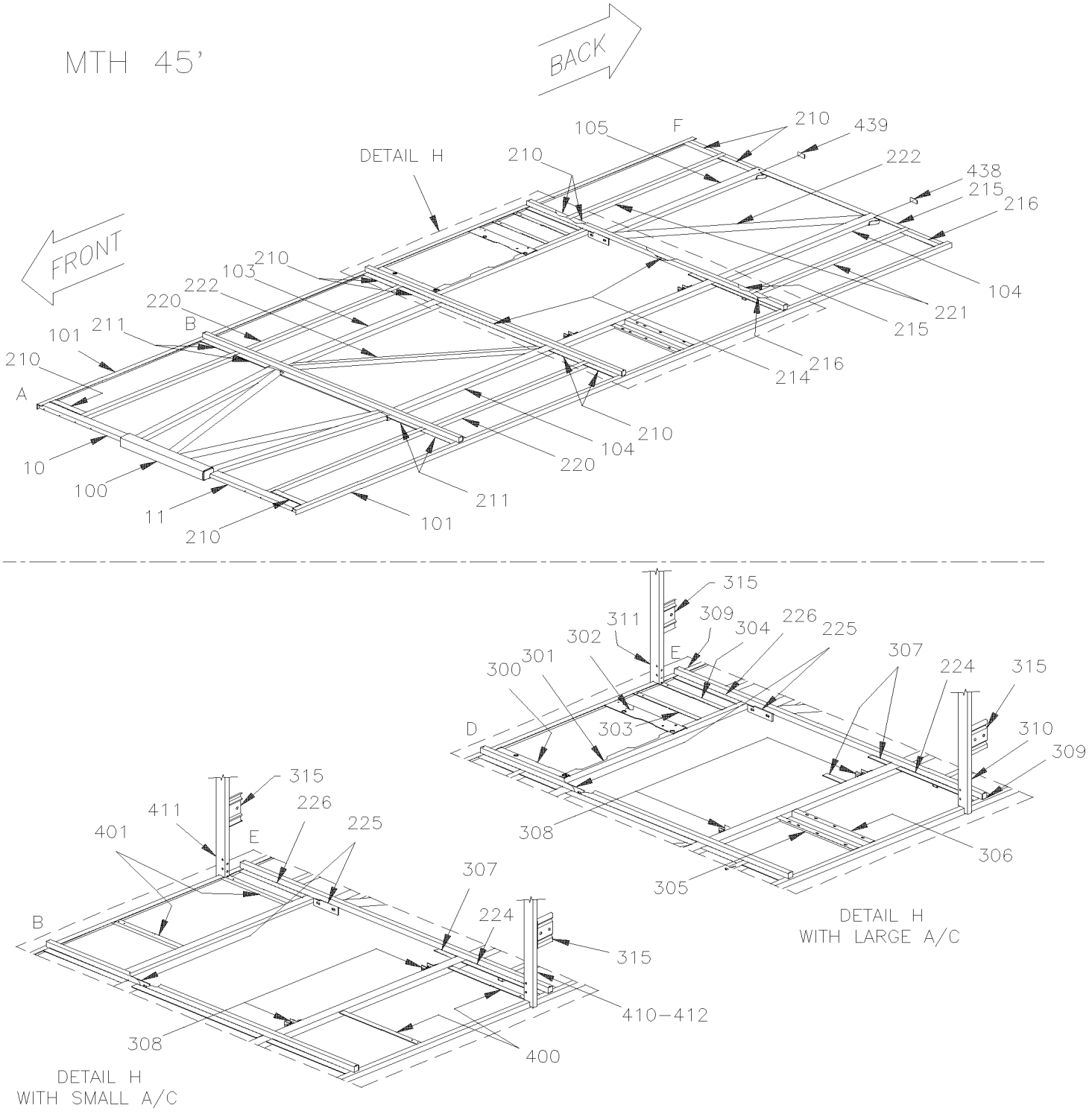

From Y-7046 To 6-8906		Date:07/2024	PAGE:Y2-1893-00
BAGGAGE COMPARTMENT STRUCTURE			

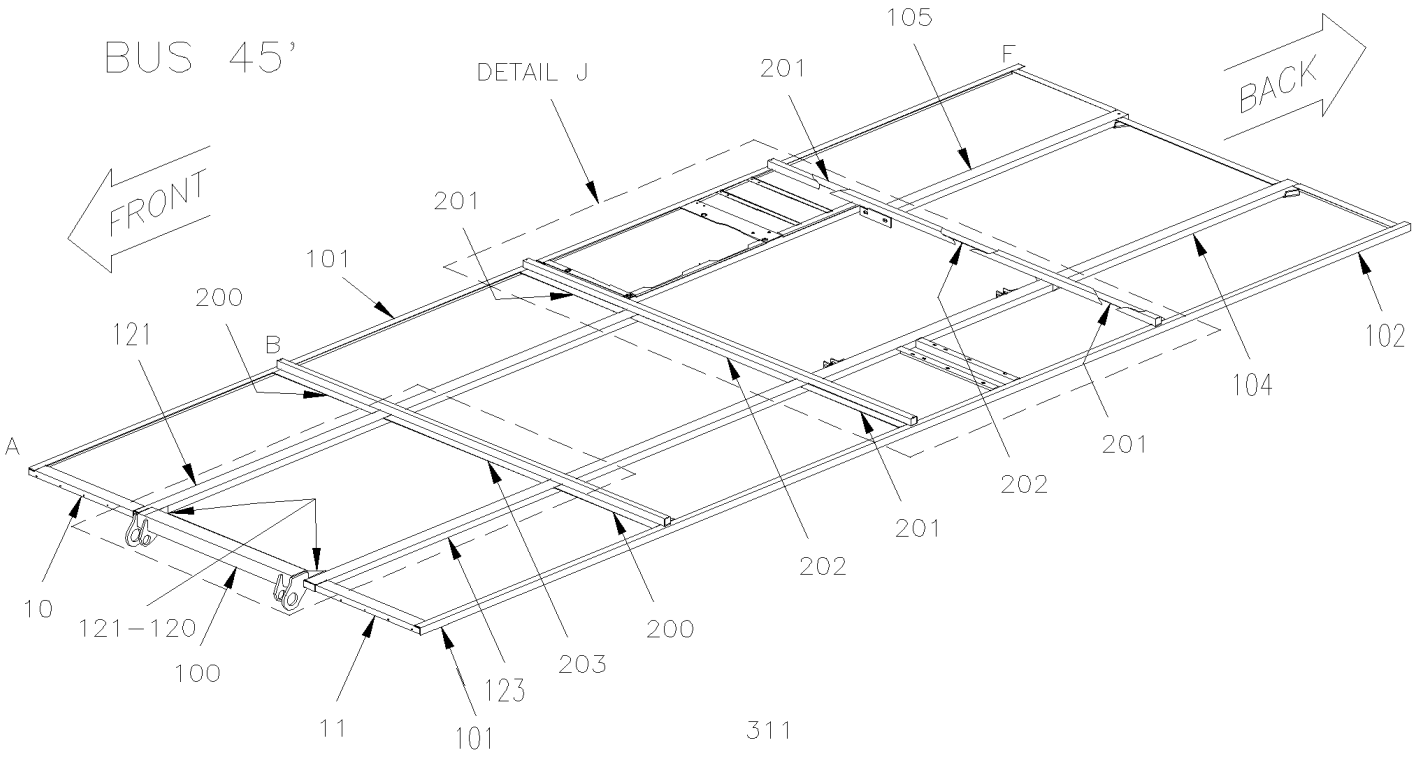

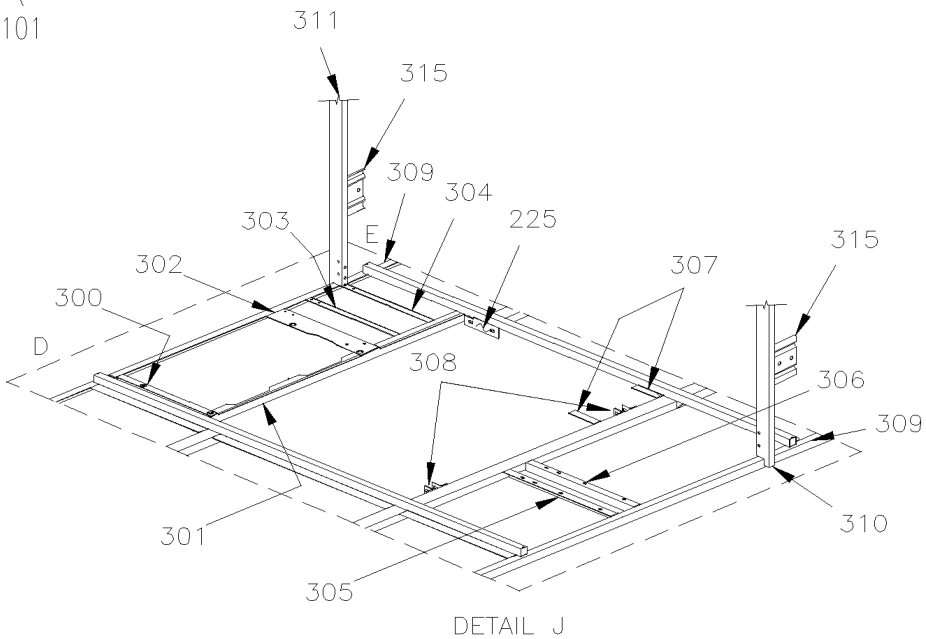

From Y-7046 To 6-8906		Date:07/2024	PAGE:Y2-1893-00

BAGGAGE COMPARTMENT STRUCTURE

Item#	Part	Description	XLII 45	XLII MTH40	XLII MTH45	XLII MTH45E	NOTES
1	213082	TUBE 2489MM	1				
2	214466	PLATE, CLOSING / TUBE 18MM x 69MM	2				
3	213149	TUBE 120MM	2				
4	260126	TUBE, VERTICAL FRAME / REAR ENGINE DOOR / 1524MM	2				
5	213891	INSERT 50MM LG	2				
NS	260120	PLATE, CLOSING / TUBE 33MM x 33MM	2				
6	213083	REINFORCEMENT 120MM x 109MM To Y-7720	2				
6	214671	REINFORCEMENT 79MM x 90MM From Y-7721	2				
7	214306	TUBE 1122MM To 2-7751	2				
7	213080	TUBE 1121MM To 2-7751	2				
7	214650	TUBE 1126MM From 2-7752	2				
8	240491	POST L.H. & R.H. 895MM From 2-7894	2				
8	214391	POST L.H. & R.H. 895MM To 1-7680	2				
8	240625	POST R.H. 895MM From 2-7894 To 3-7990	1				
8	240434	POST R.H. 895MM From 3-7991 To 4-8193	1				
8	240638	POST R.H. 895MM From 4-8194	1				
9	210081	TUBE 6" LOWER ATTACHMENT	2				
10	214222	TUBE 669MM	1				R
10	213079	TUBE 847MM	1				I
11	214223	TUBE 669MM	1				R
11	213085	TUBE 847MM	1				I
13	214391	POST L.H. & R.H. 895MM To 1-7680	1				
13	240491	POST L.H. & R.H. 895MM From 1-7681 To 2-7893	1				
13	240624	POST L.H. 895MM From 2-7894 To 3-7990	1				
13	240605	POST L.H. 895MM From 3-7991 To 3-8164	1				
20	240115	TUBE 738MM x 1 1/2" 1 1/2" To 4-8244	2				
NS	240124	TUBE 738MM x 1" x 1 1/2" To 4-8244	1				
20	240634	TUBE 738MM x 1 1/2" 2 1/2" From 4-8245	2				
21	240113	TUBE 1209MM	1				
22	240117	CLOSING PLATE 51MM X 45MM	4				
23	240114	TUBE 1374MM	1				
24	240139	TUBE 794MM To 2-7751	2				
24	240108	TUBE 794MM From 2-7752	2				
25	240116	TUBE 951MM	2				
26	240346	POST EXTERIOR To 1-7680	2				
26	240484	POST INTERIOR 794MM From 1-7681 To 3-7990	2				
26	240608	POST INTERIOR 794MM From 3-7991	2				
27	240386	POST EXTERIOR 895MM	1				
28	240134	TUBE 2489MM To 1-7680	1				
28	240485	TUBE 2489MM From 1-7681	1				
29	240515	TUBE / HOSTESS SEAT SUPPORT / 515MM	1				
30	480376	ATTACHMENT, DOOR ARM / 63.5MM	2				

From Y-7046 To 6-8906		Date:07/2024	PAGE:Y2-1893-00

BAGGAGE COMPARTMENT STRUCTURE

Item#	Part	Description	XLII 45	XLII MTH40	XLII MTH45	XLII MTH45E	NOTES
40	240107	TUBE 1073MM	1				
41	240109	TUBE 277MM	1				
42	240451	ANGLE 22MM x 28MM x 38MM	3				
43	240390	POST EXTERIOR L.H. ASSY / WRETAINER STRIP / 895MM	1				
44	240484	POST INTERIOR 794MM From 1-7681 To 3-7990	2				
44	240608	POST INTERIOR 794MM From 3-7991	2				
45	240389	POST EXTERIOR R.H. ASSY / WRETAINER STRIP / 895MM	1				
46	220424	ATTACHMENT, DOOR ARM / 58.8MM	2				
46	220424	ATTACHMENT, DOOR ARM / 58.8MM	2				
47	284555	LOCK SUPPORT / (WELDED TO STRUCTURE)	2				
53	240110	TUBE 705MM	1				
54	240108	TUBE 794MM	1				
60	240107	TUBE 1073MM	1				
61	240109	TUBE 277MM	1				
62	240451	ANGLE 22MM x 28MM x 38MM	3				
63	240110	TUBE 705MM	1				
64	240108	TUBE 794MM	1				
66	220424	ATTACHMENT, DOOR ARM / 58.8MM	2				
67	240314	ANCHOR PLATE 25MM x 90MM	1				
70	240422	POST ASSY FORWARD FENDER / STREETSIDE To 1-7680	1				
70	240488	POST ASSY FORWARD FENDER / STREETSIDE From 1-7681 To 3-7990	1				
70	240603	POST ASSY FORWARD FENDER / STREETSIDE From 3-7991	1				
71	240421	POST ASSY FORWARD FENDER / CURBSIDE To 1-7680	1				
71	240490	POST ASSY FORWARD FENDER / CURBSIDE From 1-7681 To 3-7990	1				
71	240606	POST ASSY FORWARD FENDER / CURBSIDE From 3-7991	1				
72	170262	TUBE 986MM	2				
73	172428	SUPPORT VALVE HEIGHT CONTROL	2				
74	170487	TUBE 98"	1				
75	214051	POST ASSY BACKWARD FENDER / STREETSIDE To 3-8164	1				
75	214626	POST ASSY BACKWARD FENDER / STREETSIDE From 4-8165	1				
. NS	213939	. CATCH FENDER LOWER From 4-8165	1				
. NS	5001337	. NUT INS FL HEX M8-1.25 0.5-3.0 Z050 From 4-8165	2				
. NS	5001344	. NUT INS FL HEX M6-1.0 0.5-3.0 SS From 4-8165	2				
76	214052	POST ASSY BACKWARD FENDER / CURBSIDE To 3-8164	1				
. NS	260726	. TUBE 857MM To 3-8164	1				
. NS	213942	. CATCH FENDER LOWER To 3-8164	1				
76	214627	POST ASSY BACKWARD FENDER / CURBSIDE From 4-8165	1				
. NS	213942	. CATCH FENDER LOWER From 4-8165	1				
100	**Y2-1897-00**	**FRONT SUB-FRAME / W/I BEAM RIGID SUSPENSION**					
100	**Y2-1897-50**	**FRONT SUB-FRAME / W/INDEPENDENT SUSPENSION - 16500 LBS**					
100	**Y2-1897-51**	**FRONT SUB-FRAME / W/INDEPENDENT SUSPENSION - 18000 LBS**					
101	221136	ANGLE 1/8"x1 1/2"X6354MM (250") / SS	2				

From Y-7046 To 6-8906		Date:07/2024	PAGE:Y2-1893-00

BAGGAGE COMPARTMENT STRUCTURE

Item#	Part	Description	XLII 45	XLII MTH40	XLII MTH45	XLII MTH45E	NOTES
102	220872	ANGLE 1/8"x1 1/2"X1524MM (60") / SS	2				
103	221181	TUBE 1649MM	1				
104	221180	TUBE 4764MM	1				
105	221182	TUBE 1581MM	1				
106	221183	TUBE 1526MM	2				
107	221143	TUBE 1534MM To 1-7680	2				
107	221193	TUBE 1535MM From 1-7681	2				
108	221147	TUBE 228MM To 1-7680	2				
108	221197	TUBE 224MM From 1-7681	2				
109	221146	TUBE 446MM To 1-7680	1				
109	221196	TUBE 462MM From 1-7681	1				
110	221145	TUBE 1054MM To 1-7680	1				
110	221195	TUBE 668MM From 1-7681	1				
111	221144	TUBE 1018MM To 1-7680	1				
111	221194	TUBE 1018MM From 1-7681	1				
120	214287	REINFORCEMENT "TRIANGULAR SHAPE" To 1-7680	2				
120	213629	REINFORCEMENT "TRIANGULAR SHAPE" From 1-7681	2				
121	213630	TUBE 900MM	1				
122	221139	TUBE 6307MM To 1-7680	1				
122	221184	TUBE 6308MM From 1-7681	1				
123	221140	TUBE 3197MM To 1-7680	1				
123	221185	TUBE 3197MM From 1-7681	1				
200	221199	SUPPORT FLOOR 140MM X 636MM	2				
201	220958	SUPPORT FLOOR 101MM X 636MM To 1-7680	4				
201	221198	SUPPORT FLOOR 50MM X 638MM From 1-7681	4				
202	220957	SUPPORT FLOOR 50MM X 1016MM To 1-7680	2				
202	221201	SUPPORT FLOOR 50MM X 1218MM From 1-7681	2				
203	221202	SUPPORT FLOOR 140MM X 1018MM	1				
210	220286	SUPPORT FLOOR 101MM X 298MM To 2-7770	1				
210	221243	SUPPORT FLOOR 50MM X 298MM From 2-7771	1				
211	220285	SUPPORT FLOOR 76MM X 298MM To 2-7770	1				
211	221245	SUPPORT FLOOR 130MM X 299MM From 2-7771	1				
224	221106	FLOOR SUPPORT	1				
225	220834	PLATE UNION 7 3/4" X 2"	2				
226	221104	SUPPORT FLOOR 38MM X 515MM	1				
300	213244	SUPPORT	1				
301	213442	SUPPORT ANGLE 1606MM	1				
302	213243	SUPPORT	1				
303	220977	ANGLE 19MM X 38MM X 587MM	1				
304	215539	SUPPORT JACK / CURRENT DEC 2003	1				
305	213593	SUPPORT / JACK ACCESSORIES	1				
305	220401	ANGLE SUPPORT 668MM To 1-7408	1				

From Y-7046 To 6-8906		Date:07/2024	PAGE:Y2-1893-00

BAGGAGE COMPARTMENT STRUCTURE

Item#	Part	Description	XLII 45	XLII MTH40	XLII MTH45	XLII MTH45E	NOTES
305	221178	ANGLE SUPPORT 668MM From 1-7409	1				
306	220400	ANGLE SUPPORT 668MM To 1-7408	1				
306	221177	ANGLE SUPPORT 668MM From 1-7409	1				
307	214196	SHIM 38MM X 149MM GA11	2				
308	220854	ANGLE 2" X 1 1/2" ST To 5-8630	2				
308	221440	ANGLE 2" X 1 1/2" SS From 5-8631	2				
309	210338	ANGLE 1" x 125MM	2				
309	214534	SUPPORT "U" 125MM	2				
310	213578	POST ASSY L.H. / W/STRIKER ATTACHMENT To 1-7680	1				
310	213930	POST ASSY L.H. / W/STRIKER ATTACHMENT From 1-7681 To 3-7990	1				
310	214728	POST ASSY L.H. / W/STRIKER ATTACHMENT From 3-7991	1				
311	213643	POST ASSY R.H. / W/STRIKER ATTACHMENT To 1-7680	1				
311	213931	POST ASSY R.H. / W/STRIKER ATTACHMENT From 1-7681 To 3-7990	1				
311	214708	POST ASSY R.H. / W/STRIKER ATTACHMENT From 3-7991	1				
315	240457	REINFORCEMENT ASSY 125MM	2				
400	221000	SUPPORT	2				
401	220870	ANGLE SUPPORT 22 1/4"	2				
		I) WITH INDEPENDANT SUSPENSION					
		R) WITH I BEAM RIGID SUSPENSION					

From Y-7046 To 6-8805		Date:07/2024	PAGE:Y2-1893-50
BAGGAGE COMPARTMENT STRUCTURE			

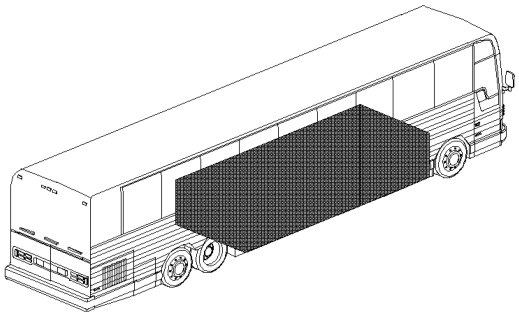

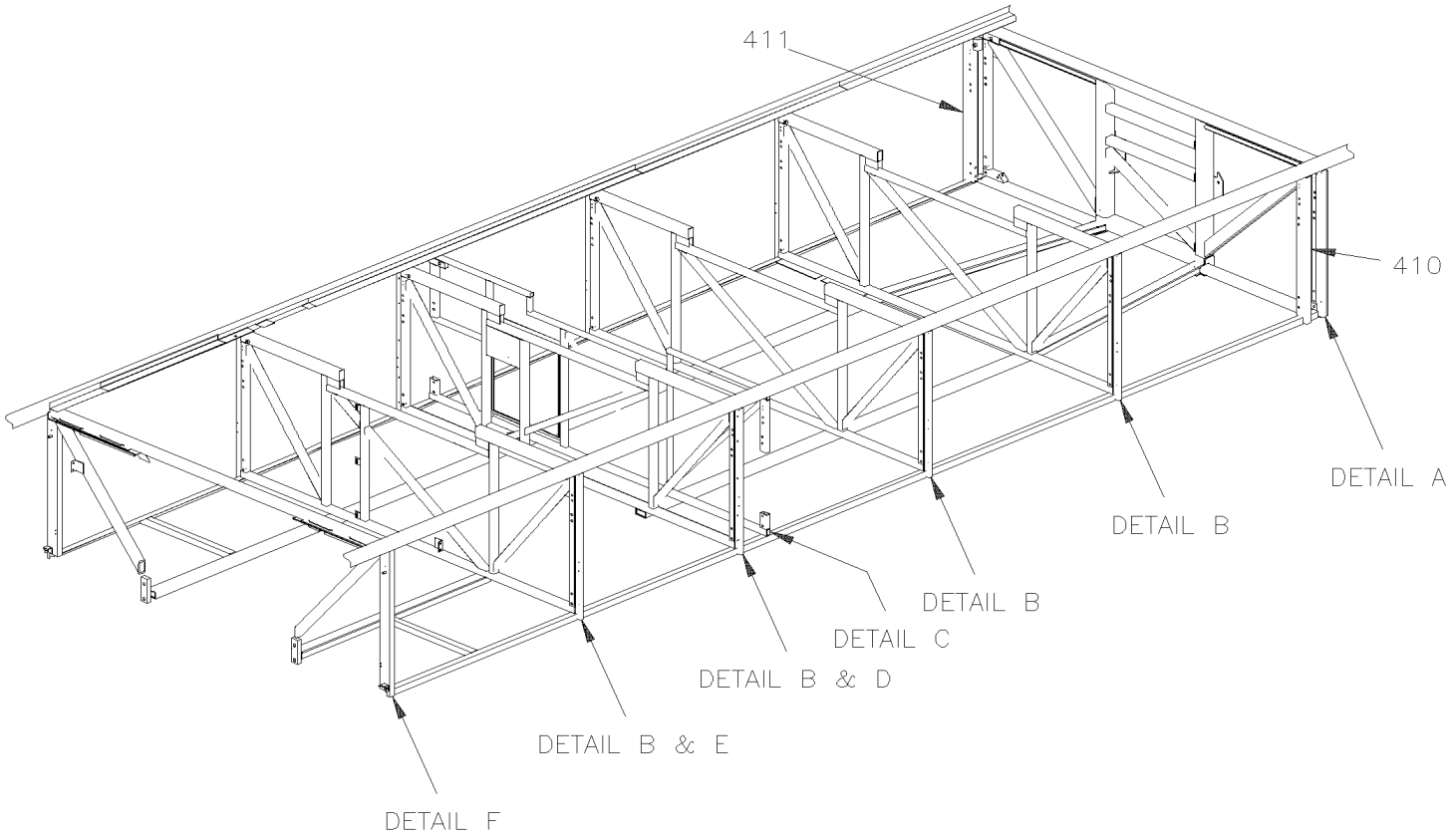

From Y-7046 To 6-8805		Date:07/2024	PAGE:Y2-1893-50
BAGGAGE COMPARTMENT STRUCTURE			

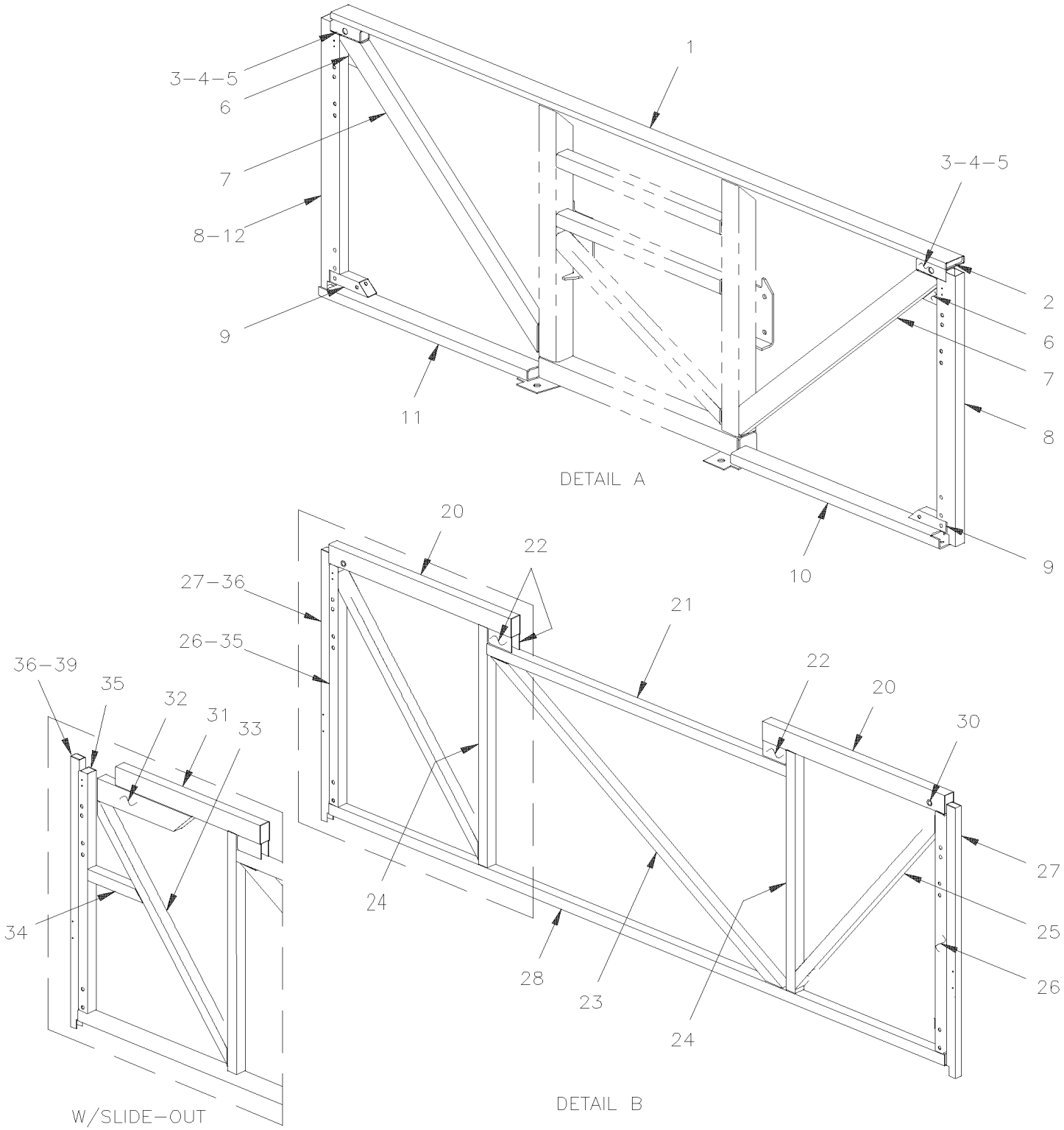

From Y-7046 To 6-8805		Date:07/2024	PAGE:Y2-1893-50
BAGGAGE COMPARTMENT STRUCTURE			

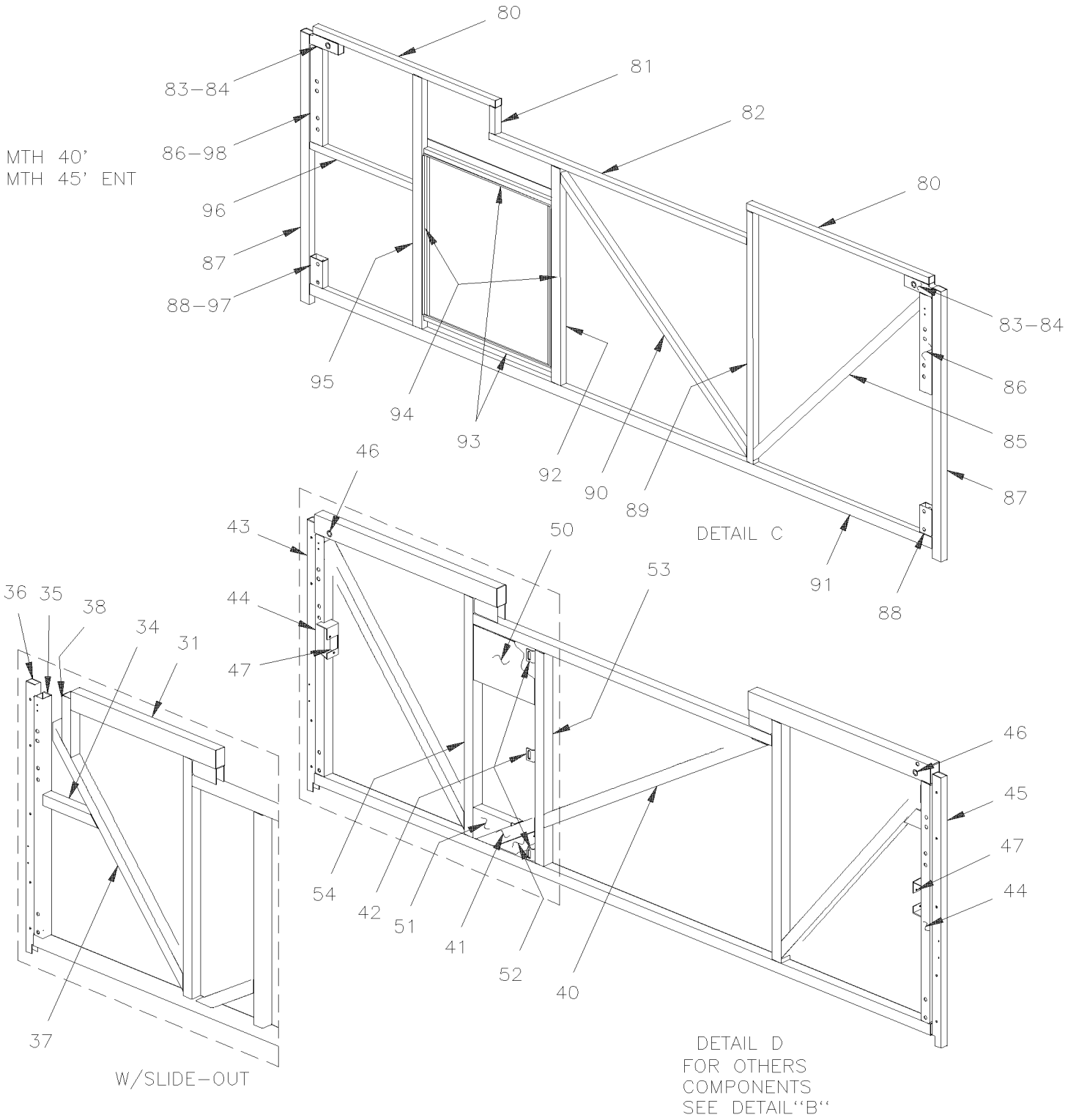

From Y-7046 To 6-8805		Date:07/2024	PAGE:Y2-1893-50
BAGGAGE COMPARTMENT STRUCTURE			

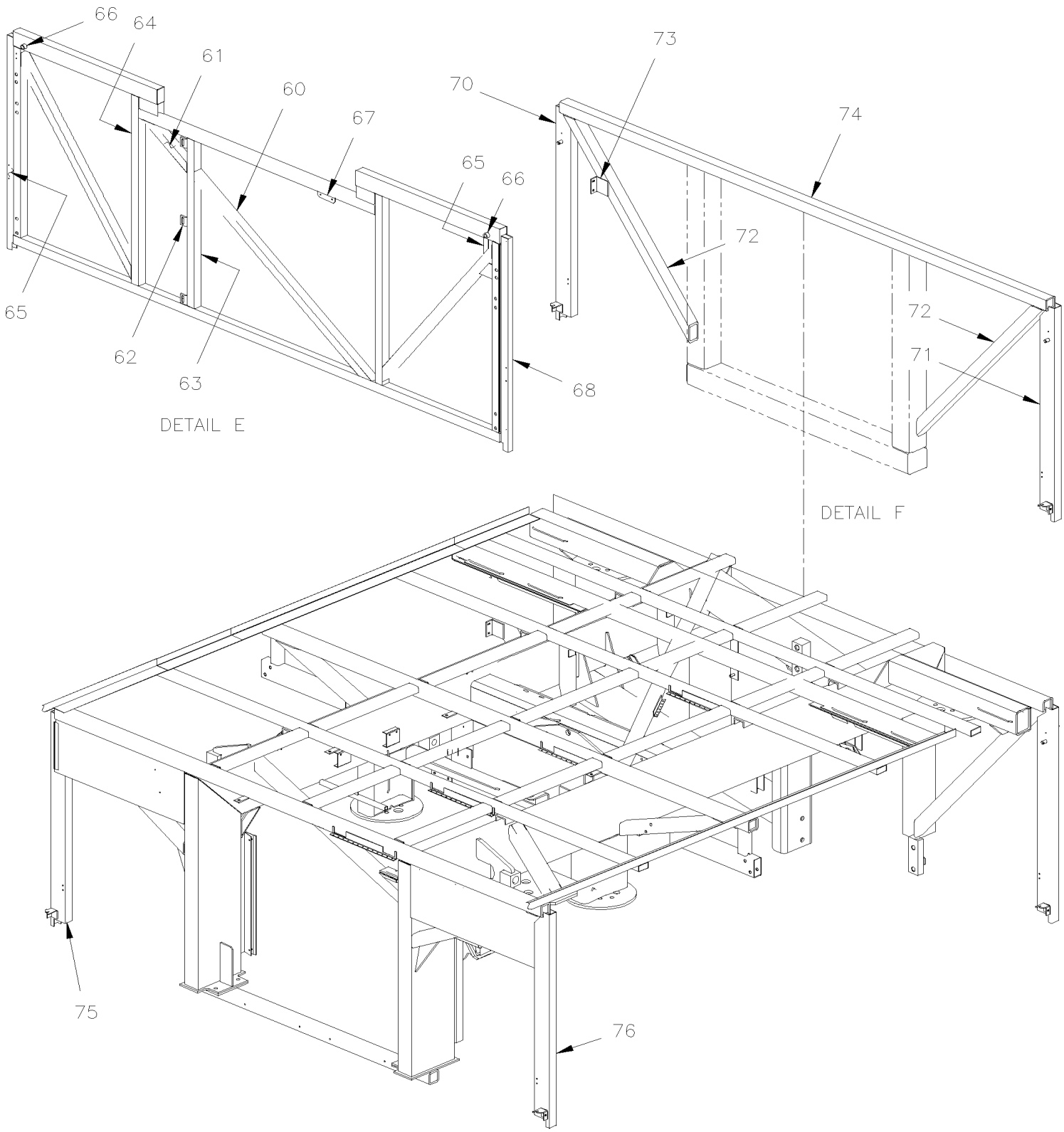

From Y-7046 To 6-8805		Date:07/2024	PAGE:Y2-1893-50
BAGGAGE COMPARTMENT STRUCTURE			

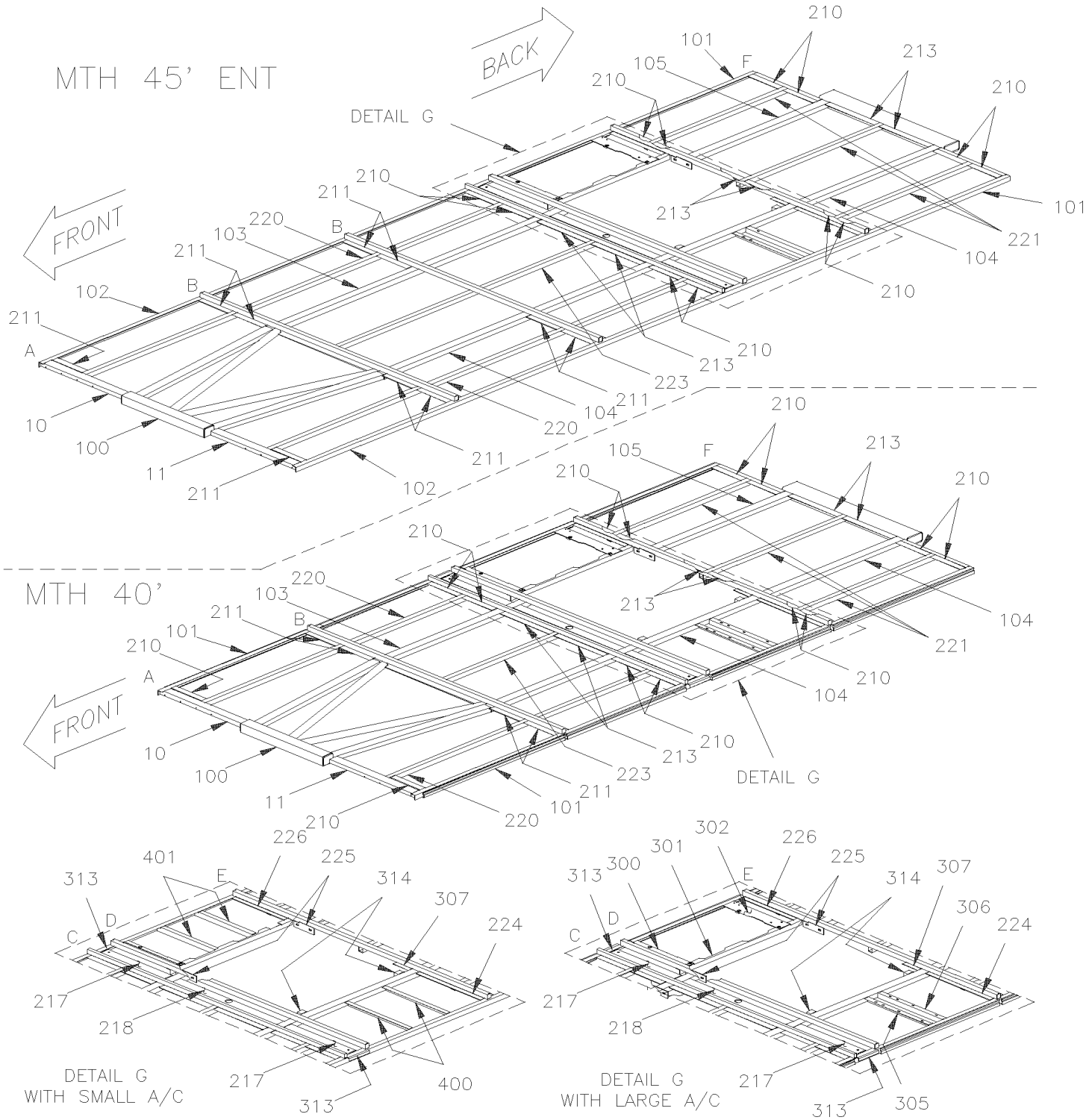

From Y-7046 To 6-8805		Date:07/2024	PAGE:Y2-1893-50
BAGGAGE COMPARTMENT STRUCTURE			

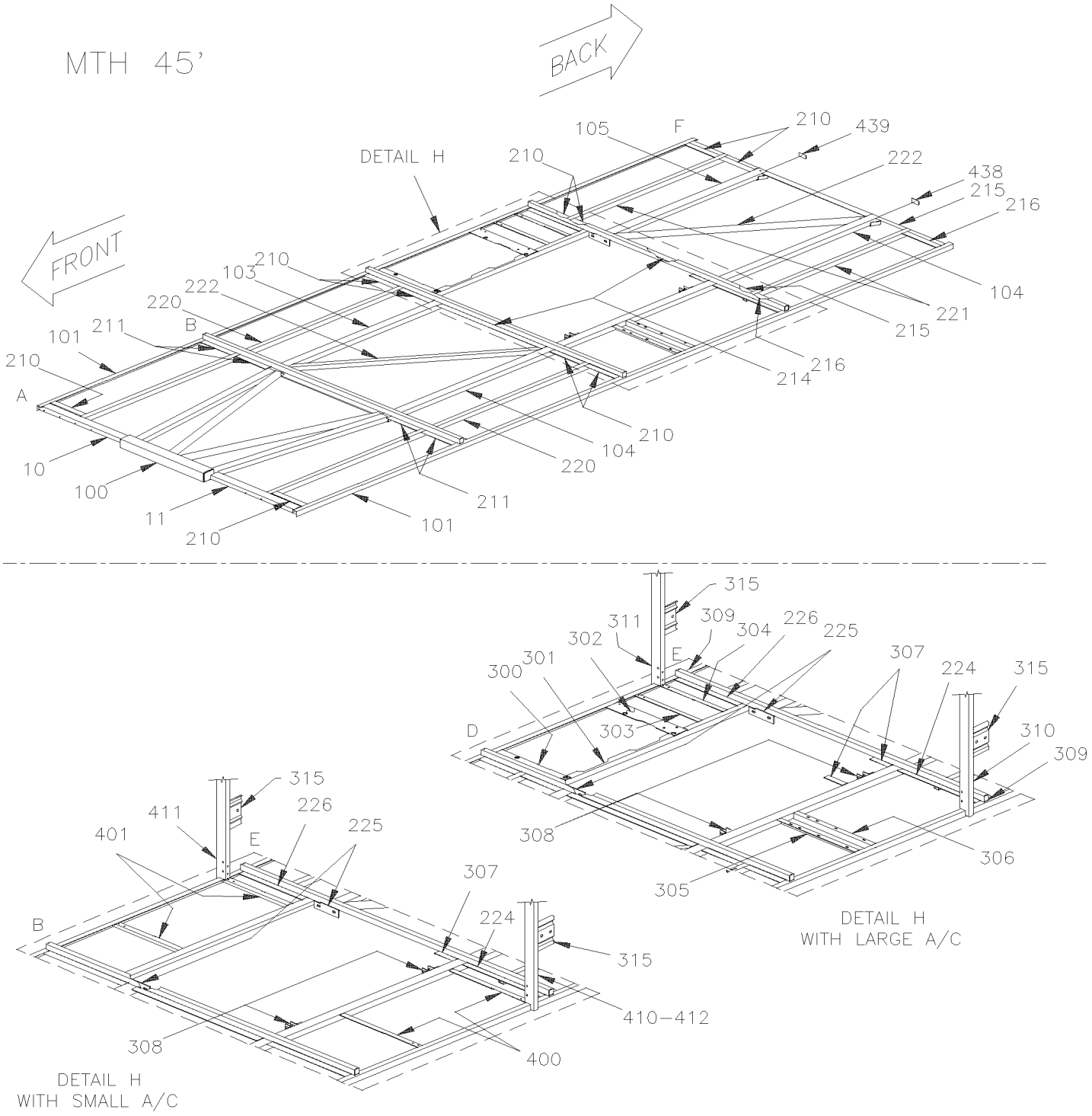

From Y-7046 To 6-8805		Date:07/2024	PAGE:Y2-1893-50

BAGGAGE COMPARTMENT STRUCTURE

Item#	Part	Description	XLII 45	XLII MTH40	XLII MTH45	XLII MTH45E	NOTES
1	213082	TUBE 2489MM		1	1	1	
2	214466	PLATE, CLOSING / TUBE 18MM x 69MM		2	2	2	
3	213149	TUBE 120MM		2	2	2	
4	260126	TUBE, VERTICAL FRAME / REAR ENGINE DOOR / 1524MM		2	2	2	
5	213891	INSERT 50MM LG		2	2	2	
NS	260120	PLATE, CLOSING / TUBE 33MM x 33MM		2	2	2	
6	213083	REINFORCEMENT 120MM x 109MM To Y-7720		2	2	2	
6	214671	REINFORCEMENT 79MM x 90MM From Y-7721		2	2	2	
7	214306	TUBE 1122MM To 2-7751		2	2	2	
7	213080	TUBE 1121MM To 2-7751		2	2	2	
7	214650	TUBE 1126MM From 2-7752		2	2	2	
8	240491	POST L.H. & R.H. 895MM From 2-7894		2	2		
8	214391	POST L.H. & R.H. 895MM To 1-7680		2	2		
8	240625	POST R.H. 895MM From 2-7894 To 3-7990		1	1	1	
8	240434	POST R.H. 895MM From 3-7991 To 4-8193		1	1	1	
8	240638	POST R.H. 895MM From 4-8194		1	1	1	
9	210081	TUBE 6" LOWER ATTACHMENT		2	2	2	
10	213079	TUBE 847MM		1	1	1	
11	213085	TUBE 847MM		1	1	1	
12	214614	POST L.H. / W/SLIDE OUT / 895MM From 2-7806 To 3-8164			1		
12	248453	POST L.H. / W/SLIDE OUT / 895MM From 4-8165			1		
13	214391	POST L.H. & R.H. 895MM To 1-7680		1	1	1	
13	240491	POST L.H. & R.H. 895MM From 1-7681 To 2-7893		1	1	1	
13	240624	POST L.H. 895MM From 2-7894 To 3-7990		1	1	1	
13	240605	POST L.H. 895MM From 3-7991 To 3-8164		1	1	1	
20	240115	TUBE 738MM x 1 1/2" 1 1/2" To 4-8244		2	2	2	
NS	240124	TUBE 738MM x 1" x 1 1/2" To 4-8244		1	1	1	
20	240634	TUBE 738MM x 1 1/2" 2 1/2" From 4-8245		2	2	2	
21	240113	TUBE 1209MM		1	1	1	
22	240117	CLOSING PLATE 51MM X 45MM		4	4	4	
23	240114	TUBE 1374MM		1	1	1	
24	240139	TUBE 794MM To 2-7751		2	2	2	
24	240108	TUBE 794MM From 2-7752		2	2	2	
25	240116	TUBE 951MM		2	2	2	
26	240346	POST EXTERIOR To 1-7680		2	2	2	
26	240484	POST INTERIOR 794MM From 1-7681 To 3-7990		2	2	2	
26	240608	POST INTERIOR 794MM From 3-7991		2	2	2	
26	240497	TUBE 794MM		1	1	1	H
27	240386	POST EXTERIOR 895MM		1	1	1	
28	240134	TUBE 2489MM To 1-7680		1	1	1	
28	240485	TUBE 2489MM From 1-7681		1	1	1	
30	480376	ATTACHMENT, DOOR ARM / 63.5MM		2	2	2	

From Y-7046 To 6-8805		Date:07/2024	PAGE:Y2-1893-50

BAGGAGE COMPARTMENT STRUCTURE

Item#	Part	Description	XLII 45	XLII MTH40	XLII MTH45	XLII MTH45E	NOTES
31	240583	TUBE 584MM To 4-8244			1		
31	240635	TUBE 584MM From 4-8245			1		
32	214611	TUBE 408MM			1		
33	240581	TUBE 880MM			1		
34	240585	TUBE 223MM			1		
35	240584	POST EXTERIOR 808MM To 3-7990			1		
35	240622	POST EXTERIOR 808MM From 3-7991			1		
36	240601	POST ASSY W/HINGE RETAINER STRIP / 859.5MM			1		
37	240587	TUBE			1		
38	240586	TUBE			1		
39	240503	POST EXTERIOR / W/7 HOLES 1/4-28 / 860MM From 2-7764			1		
40	240107	TUBE 1073MM		1	1	1	
41	240109	TUBE 277MM		1	1	1	
42	240451	ANGLE 22MM x 28MM x 38MM			3		
43	240386	POST EXTERIOR 895MM		1	1	1	
43	240390	POST EXTERIOR L.H. ASSY / WRETAINER STRIP / 895MM		1	1	1	
44	240484	POST INTERIOR 794MM From 1-7681 To 3-7990		2	2	2	
44	240608	POST INTERIOR 794MM From 3-7991		2	2	2	
45	240386	POST EXTERIOR 895MM		1	1	1	
45	240389	POST EXTERIOR R.H. ASSY / WRETAINER STRIP / 895MM		1	1	1	
46	480376	ATTACHMENT, DOOR ARM / 63.5MM		2	2	2	
46	220424	ATTACHMENT, DOOR ARM / 58.8MM		2		2	
46	220424	ATTACHMENT, DOOR ARM / 58.8MM			2		
47	284555	LOCK SUPPORT / (WELDED TO STRUCTURE)			2		
50	240379	UPPER SUPPORT PLATE "U"		1		1	
51	240380	LOWER SUPPORT R.H.		1		1	
52	240408	LOWER SUPPORT L.H.		1		1	
53	240382	TUBE 704MM		1		1	
53	240110	TUBE 705MM			1		
54	240381	TUBE 793MM		1		1	
54	240108	TUBE 794MM			1		
60	240107	TUBE 1073MM		1	1	1	
61	240109	TUBE 277MM		1	1	1	
62	240451	ANGLE 22MM x 28MM x 38MM		3	3	3	
63	240110	TUBE 705MM		1	1	1	
64	240108	TUBE 794MM		1	1	1	
65	240398	POST EXTERIOR L.H. 895MM		1	1	1	
65	240503	POST EXTERIOR / W/7 HOLES 1/4-28 / 860MM		1	1		
66	220424	ATTACHMENT, DOOR ARM / 58.8MM		2	2	2	
66	480376	ATTACHMENT, DOOR ARM / 63.5MM		2		2	
67	240314	ANCHOR PLATE 25MM x 90MM		1	1	1	
68	240386	POST EXTERIOR 895MM		1	1	1	

From Y-7046 To 6-8805		Date:07/2024	PAGE:Y2-1893-50

BAGGAGE COMPARTMENT STRUCTURE

Item#	Part	Description	XLII 45	XLII MTH40	XLII MTH45	XLII MTH45E	NOTES
68	240397	POST EXTERIOR R.H. 895MM		1	1		
70	240422	POST ASSY FORWARD FENDER / STREETSIDE To 1-7680		1	1	1	
70	240488	POST ASSY FORWARD FENDER / STREETSIDE From 1-7681 To 3-7990		1	1	1	
70	240603	POST ASSY FORWARD FENDER / STREETSIDE From 3-7991		1	1	1	
71	240421	POST ASSY FORWARD FENDER / CURBSIDE To 1-7680		1	1	1	
71	240490	POST ASSY FORWARD FENDER / CURBSIDE From 1-7681 To 3-7990		1	1	1	
71	240606	POST ASSY FORWARD FENDER / CURBSIDE From 3-7991		1	1	1	
72	170262	TUBE 986MM		2	2	2	
73	172428	SUPPORT VALVE HEIGHT CONTROL		2	2	2	
74	170487	TUBE 98"		1	1	1	
75	214051	POST ASSY BACKWARD FENDER / STREETSIDE To 3-8164		1	1	1	
75	214626	POST ASSY BACKWARD FENDER / STREETSIDE From 4-8165		1	1	1	
. NS	213939	. CATCH FENDER LOWER From 4-8165		1	1	1	
. NS	5001337	. NUT INS FL HEX M8-1.25 0.5-3.0 Z050 From 4-8165		2	2	2	
. NS	5001344	. NUT INS FL HEX M6-1.0 0.5-3.0 SS From 4-8165		2	2	2	
76	214052	POST ASSY BACKWARD FENDER / CURBSIDE To 3-8164		1	1	1	
. NS	260726	. TUBE 857MM To 3-8164		1	1	1	
. NS	213942	. CATCH FENDER LOWER To 3-8164		1	1	1	
76	214627	POST ASSY BACKWARD FENDER / CURBSIDE From 4-8165		1	1	1	
. NS	213942	. CATCH FENDER LOWER From 4-8165		1	1	1	
80	240463	TUBE 736MM		2		2	
81	240361	TUBE 89MM		2		2	
82	240363	TUBE 1042MM		1		1	
83	240365	TUBE 112MM		2		2	
83	240464	ATTACHMENT "U", DOOR HINGE / 112MM		2		2	
84	240371	TUBE 38.1MM		2		2	
85	240367	TUBE 1020MM		1		1	
86	240364	TUBE 323MM To 3-7990		2		2	
86	240609	TUBE 323MM From 3-7991		2		2	
87	240394	TUBE 895MM		2		2	
88	240500	TUBE 90MM To 3-7990		2		2	
88	240610	TUBE 90MM From 3-7991		2		2	
89	240362	TUBE 832MM		1		1	
90	240366	TUBE 1022MM		1		1	
91	240359	TUBE 2517MM To 3-7990		1		1	
91	240499	TUBE 2517MM From 3-7991		1		1	
92	240427	TUBE 717MM		1		1	
93	240409	REINFORCEMENT "Z" SHAPE 522MM		2		2	
94	240429	REINFORCEMENT 525MM		2		2	
95	240428	TUBE 832MM		1		1	
96	240384	TUBE 414MM		1		1	
97	240531	TUBE 130MM To 5-8813		1			

From Y-7046 To 6-8805		Date:07/2024	PAGE:Y2-1893-50

BAGGAGE COMPARTMENT STRUCTURE

Item#	Part	Description	XLII 45	XLII MTH40	XLII MTH45	XLII MTH45E	NOTES
98	240532	TUBE 170MM To 5-8813		1			
100	**Y2-1897-00**	**FRONT SUB-FRAME / W/I BEAM RIGID SUSPENSION**					
100	**Y2-1897-50**	**FRONT SUB-FRAME / W/INDEPENDENT SUSPENSION - 16500 LBS**					
100	**Y2-1897-51**	**FRONT SUB-FRAME / W/INDEPENDENT SUSPENSION - 18000 LBS**					
101	221136	ANGLE 1/8"x1 1/2"X6354MM (250") / SS			2		
101	221135	ANGLE 1/8"x1 1/2"X5464MM (215") / SS		2		2	
102	220872	ANGLE 1/8"x1 1/2"X1524MM (60") / SS				2	
103	221081	TUBE 1478MM To 3-8164		1			
103	221284	TUBE 1480MM From 4-8165 To 5-8813		1			
103	221022	TUBE 1647MM To 3-8164			1		
103	221276	TUBE 1649MM From 4-8165			1		
103	221039	TUBE 2282MM To 3-8164				1	
103	221280	TUBE 2885MM From 4-8165				1	
104	221046	TUBE 4044MM To 3-8164		1			
104	221285	TUBE 4044MM From 4-8165 To 5-8813		1			
104	221021	TUBE 4759MM To 3-8164			1		
104	221278	TUBE 4760MM From 4-8165			1		
104	221050	TUBE 5448MM To 3-8164				1	
104	221281	TUBE 5450MM From 4-8165				1	
105	221032	TUBE 1409MM To 3-8164		1			
105	211282	TUBE From 4-8165 To 5-8813		1			
105	220835	TUBE 1581MM To 3-8164			1		
105	221277	TUBE 1581MM From 4-8165			1		
105	221032	TUBE 1409MM To 3-8164				1	
105	221282	TUBE 1410MM From 4-8165				1	
106	221129	TUBE 1355MM To 3-8164		2			
106	221286	TUBE 1656MM From 4-8165 To 5-8813		2			
106	221126	TUBE 1526MM To 3-8164			2		
106	221279	TUBE 1526MM From 4-8165			2		
106	221132	TUBE 1474MM To 3-8164				2	
106	221283	TUBE 1474MM From 4-8165				2	
107	214078	TUBE 1614MM To 3-8164			2		
107	221290	TUBE 1692MM From 4-8165			2		
107	214092	TUBE 1449MM To 3-8164		2			
107	221291	TUBE 1542MM From 4-8165 To 5-8813		2			
107	214104	TUBE 1562MM To 3-8164				2	
107	221292	TUBE 1642MM From 4-8165				2	
210	220286	SUPPORT FLOOR 101MM X 298MM To 2-7770		AR	AR	AR	
210	221243	SUPPORT FLOOR 50MM X 298MM From 2-7771		AR	AR	AR	
211	220285	SUPPORT FLOOR 76MM X 298MM		AR	AR	AR	
211	221245	SUPPORT FLOOR 130MM X 299MM		AR	AR	AR	
212	220287	SUPPORT FLOOR 203MM X 299MM To 1-7680		4			

From Y-7046 To 6-8805		Date:07/2024	PAGE:Y2-1893-50

BAGGAGE COMPARTMENT STRUCTURE

Item#	Part	Description	XLII 45	XLII MTH40	XLII MTH45	XLII MTH45E	NOTES
212	220287	SUPPORT FLOOR 203MM X 299MM To 1-7680			2		
212	220287	SUPPORT FLOOR 203MM X 299MM To 1-7680				6	
212	221245	SUPPORT FLOOR 130MM X 299MM From 1-7681 To 5-8813		4			
212	221245	SUPPORT FLOOR 130MM X 299MM From 1-7681			2		
212	221245	SUPPORT FLOOR 130MM X 299MM From 1-7681				6	
213	220464	SUPPORT FLOOR 76MM X 488MM To 2-7770		AR		AR	
213	221250	SUPPORT FLOOR 50MM X 488MM From 2-7771		AR		AR	
213	221162	SUPPORT FLOOR 76MM X 507MM To 2-7770		AR		AR	
213	221249	SUPPORT FLOOR 50MM X 507MM From 2-7771		AR		AR	
214	220850	SUPPORT FLOOR 76MM X 940MM			2		
214	221161	SUPPORT FLOOR 76MM X 1015MM To 2-7770			2		
214	221248	SUPPORT FLOOR 50MM X 1015MM From 2-7771			2		
215	220936	SUPPORT FLOOR 76MM X 222MM To 2-7770			2		
215	221247	SUPPORT FLOOR 50MM X 222MM From 2-7771			2		
216	220935	SUPPORT FLOOR 100MM X 374MM To 2-7770			2		
216	221246	SUPPORT FLOOR 50MM X 374MM From 2-7771			2		
217	213342	SUPPORT 660MM		2		2	
218	213343	SUPPORT 1016MM		1		1	
220	221083	TUBE 2578MM To 5-8813		2			
220	221153	TUBE 4077MM To 5-8813		2			
220	221134	TUBE 3119MM			2		
220	221086	TUBE 4102MM				2	
220	221153	TUBE 4077MM				2	
221	220466	TUBE 1403MM To 5-8813		3			
221	220829	TUBE 62MM			2		
221	220466	TUBE 1403MM				3	
222	220851	TUBE 1829MM To Y-7121			2		
222	221158	TUBE 1805MM From Y-7122			2		
223	221084	TUBE 1196MM To 5-8813		1			
223	221085	TUBE 2616MM				1	
224	221106	FLOOR SUPPORT		1	1	1	
225	220834	PLATE UNION 7 3/4" X 2"		2	2	2	
226	221104	SUPPORT FLOOR 38MM X 515MM		1	1	1	
300	213244	SUPPORT		1	1	1	
301	213245	SUPPORT ANGLE 1228MM		1		1	
301	213442	SUPPORT ANGLE 1606MM			1		
302	213243	SUPPORT		1		1	
303	214494	PANEL CONDENSOR SEPARATOR BACKWARD			1		
304	220977	ANGLE 19MM X 38MM X 587MM			1		
305	220401	ANGLE SUPPORT 668MM To 1-7408		1	1	1	
305	221178	ANGLE SUPPORT 668MM From 1-7409		1	1	1	
306	220400	ANGLE SUPPORT 668MM To 1-7408		1	1	1	

From Y-7046 To 6-8805		Date:07/2024	PAGE:Y2-1893-50

BAGGAGE COMPARTMENT STRUCTURE

Item#	Part	Description	XLII 45	XLII MTH40	XLII MTH45	XLII MTH45E	NOTES
306	221177	ANGLE SUPPORT 668MM From 1-7409		1	1	1	
307	214196	SHIM 38MM X 149MM GA11		2	2	2	
308	220854	ANGLE 2" X 1 1/2" ST			4		
309	210338	ANGLE 1" x 125MM			2		
309	214534	SUPPORT "U" 125MM			2		
310	213578	POST ASSY L.H. / W/STRIKER ATTACHMENT To 1-7680			1		
310	213930	POST ASSY L.H. / W/STRIKER ATTACHMENT From 1-7681 To 3-7990			1		
310	214728	POST ASSY L.H. / W/STRIKER ATTACHMENT From 3-7991			1		
NS	214318	ANGLE 450MM			1		
311	213643	POST ASSY R.H. / W/STRIKER ATTACHMENT To 1-7680			1		
311	213931	POST ASSY R.H. / W/STRIKER ATTACHMENT From 1-7681 To 3-7990			1		
311	214708	POST ASSY R.H. / W/STRIKER ATTACHMENT From 3-7991			1		
313	221043	ANGLE 194MM		2		2	
314	213058	ATTACHMENT "HAT" FORM / FUEL TANK To 5-8637		2		2	
314	215720	ATTACHMENT ASSY / FUEL TANK From 5-8638		2		2	
315	240457	REINFORCEMENT ASSY 125MM			2		
400	221000	SUPPORT			2		
400	221034	ANGLE SUPPORT 668MM		2		2	
401	220870	ANGLE SUPPORT 22 1/4"		2	2	2	
402	221077	ANGLE 1606MM			1		
410	213352	POST ASSY W/INSERT TO FIX PANTO ARM / FIXED AT L.H. SIDE OF DOOR			1	1	
410	213579	POST ASSY W/INSERT TO FIX PANTO ARM / FIXED AT L.H. SIDE OF DOOR To 1-7680			1	1	
410	212926	POST ASSY W/INSERT TO FIX PANTO ARM / FIXED AT L.H. SIDE OF DOOR From 1-7681 To 3-7990			1	1	
410	214707	POST ASSY W/INSERT TO FIX PANTO ARM / FIXED AT L.H. SIDE OF DOOR From 3-7991			1	1	
411	213353	POST ASSY W/INSERT TO FIX PANTO ARM / FIXED AT R.H. SIDE OF DOOR			1	1	
411	213580	POST ASSY W/INSERT TO FIX PANTO ARM / FIXED AT R.H. SIDE OF DOOR To 1-7680			1	1	
411	212851	POST ASSY W/INSERT TO FIX PANTO ARM / FIXED AT R.H. SIDE OF DOOR From 1-7681 To 3-7990			1	1	
411	214706	POST ASSY W/INSERT TO FIX PANTO ARM / FIXED AT R.H. SIDE OF DOOR From 3-7991			1	1	
412	214594	POST / STREETSIDE W/SLIDE-OUT			1		S
438	229036	REINFORCEMENT L.H.			1		
		H) WITH HINGE DOOR					
		S) WITH SLIDE-OUT					

From Y-7046 To 8-9339		Date:07/2024	PAGE:Y2-1894-00
REAR CAP - STRUCTURE			

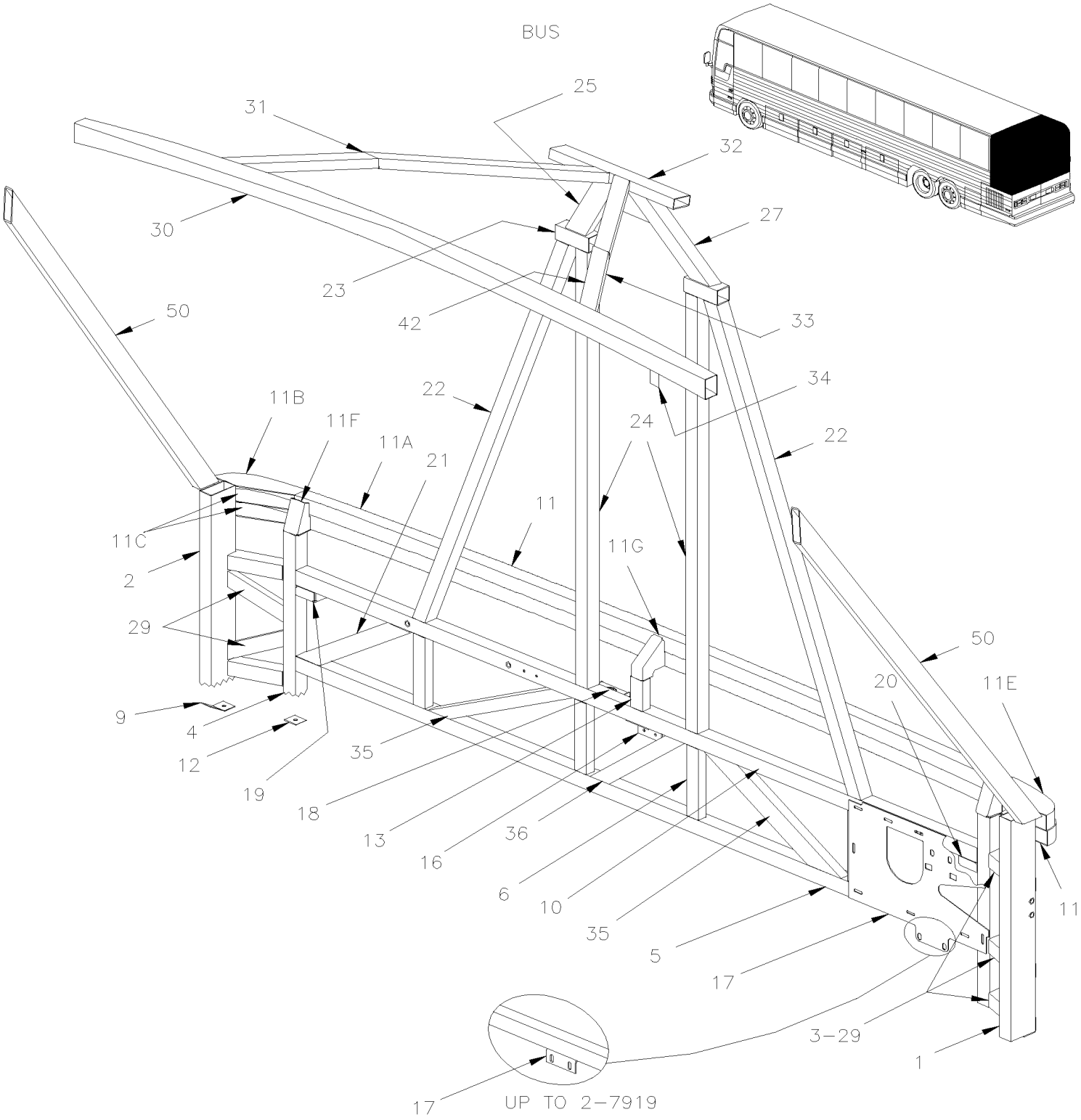

From Y-7046 To 8-9339		Date:07/2024	PAGE:Y2-1894-00
REAR CAP - STRUCTURE			

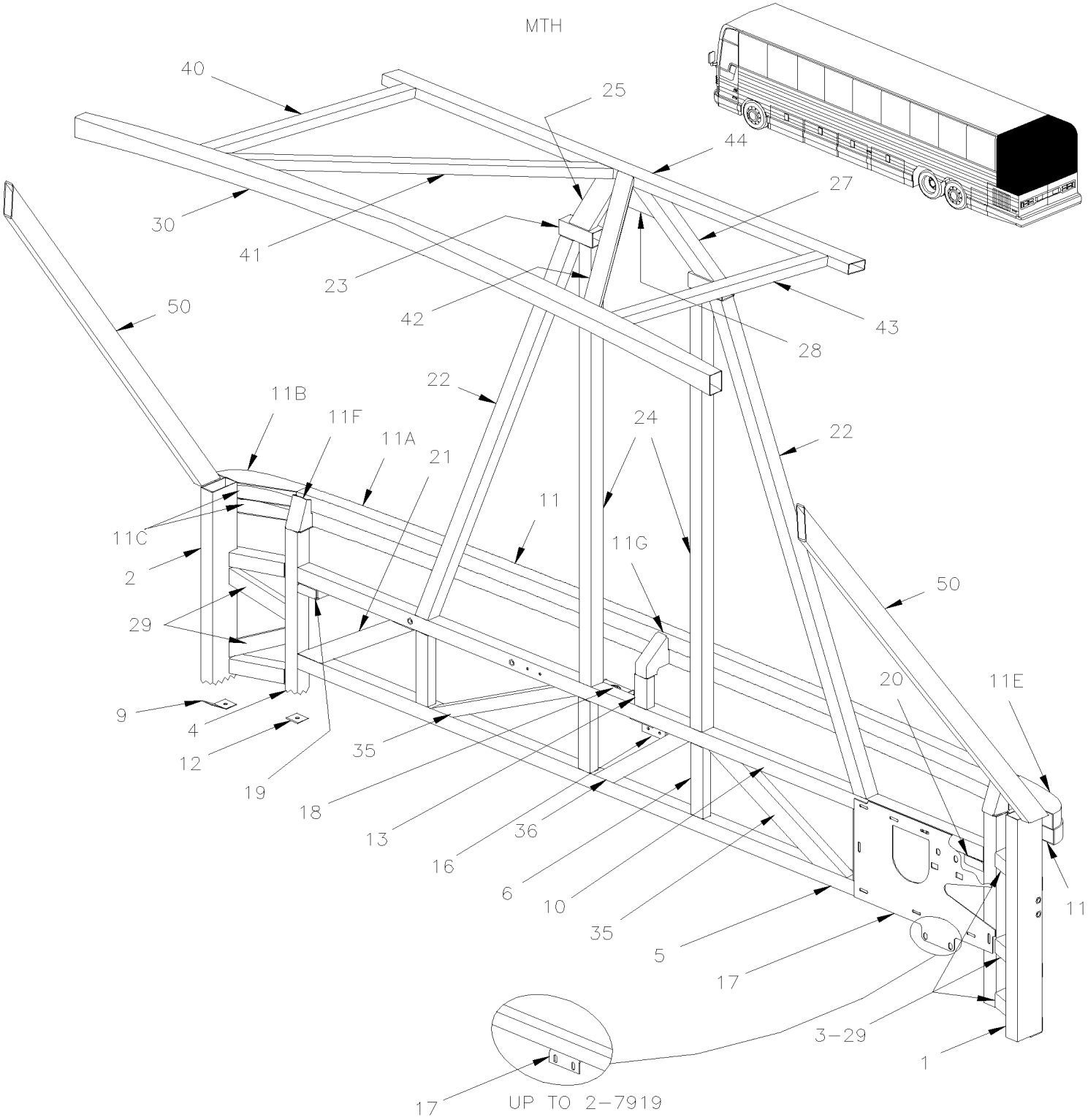

From Y-7046 To 8-9339		Date:07/2024	PAGE:Y2-1894-00

REAR CAP - STRUCTURE

Item#	Part	Description	XLII 45	XLII MTH40	XLII MTH45	XLII MTH45E	NOTES
1	260746	LEFT CORNER TUBE / MTH 89"				1	
1	260809	LEFT CORNER TUBE / BUS To 6-8906	1				
1	260752	LEFT CORNER TUBE / MTH 83" & MTH 86"		1	1	1	
1	214014	CLOSING PLATE From 2-7920	2	2	2	2	
2	260745	RIGHT CORNER TUBE / MTH 89"				1	
2	260810	RIGHT CORNER TUBE / BUS To 6-8906	1				
2	260754	RIGHT CORNER TUBE / MTH 83" & MTH 86"		1	1	1	
2	214014	CLOSING PLATE From 2-7920	2	2	2	2	
3	260740	TUBE 172MM	6	6	6	6	
4	260805	TUBE / MTH 89"				2	
4	260804	TUBE / BUS To 6-8906	2				
4	260747	TUBE / MTH 83" & MTH 86"		1	1	1	
5	260748	TUBE To 2-7888	1	1	1	1	
5	260919	TUBE From 2-7889 To 3-8164	1	1	1	1	
5	260942	TUBE From 4-8165	1	1	1	1	
6	260756	VERTICAL TUBE To 2-7888	4	4	4	4	
6	260921	TUBE VERTICAL From 2-7889	4	4	4	4	
9	260759	BUTT PLATE	2	2	2	2	
10	260793	TUBE To 2-7888	1	1	1	1	
10	260920	TUBE From 2-7889	1	1	1	1	
11	260781P	REAR FORMING TUBE ASSY	1	1	1	1	
. A	260852	. TUBE	1	1	1	1	
. B	261185	. CORNER ASSY	2	2	2	2	
. D	261186	. CORNER ASSY	2	2	2	2	
. F	260757	. SUPPORT SIDE POST	2	2	2	2	
. G	260813	. SUPPORT CENTER POST	1	1	1	1	
12	260760	BUTT PLATE	2	2	2	2	
13	260786	TUBE SUPPORT 152MM / MTH 89"				1	
13	260753	TUBE SUPPORT 76MM / MTH 83" & MTH86"		1	1	1	
16	285988	ANGLE STOPPER LH ENGINE DOOR To 2-7888	1	1	1	1	
16	287229	ANGLE STOPPER LH ENGINE DOOR From 2-7889	1	1	1	1	
17	260818	SUPPORT / SURGE TANK To 2-7919	1	1	1	1	
17	214908	SUPPORT / SURGE TANK From 2-7920	1	1	1	1	
18	282869	FLOATING NUT ASSY WITH CASE To 1-7627	1	1	1	1	
18	287943	FLOATING NUT ASSY WITH CASE From 1-7628 To 2-7888	1	1	1	1	
18	287230	SUPPORT ASSY W/NUT From 2-7889	1	1	1	1	
19	285916	FIXATION PLATE	1	1	1	1	
20	285991	FIXATION PLATE	1	1	1	1	
21	260922	TUBE From 2-7889 To 3-8164	1	1	1	1	
21	260944	TUBE From 4-8165	1	1	1	1	
22	271226	TUBE	2	2	2	2	
23	271227	TUBE	2	2	2	2	

From Y-7046 To 8-9339		Date:07/2024	PAGE:Y2-1894-00

REAR CAP - STRUCTURE

Item#	Part	Description	XLII 45	XLII MTH40	XLII MTH45	XLII MTH45E	NOTES
24	271225	TUBE	2	2	2	2	
25	271232	TUBE / MTH 83"		1	1		
25	271233	TUBE / MTH 86"		1	1	1	
25	271234	TUBE / MTH 89"				1	
25	271236	TUBE / BUS To 6-8906	1				
27	271229	TUBE / MTH 83"		1	1		
27	271230	TUBE / MTH 86"		1	1	1	
27	271231	TUBE / MTH 89"				1	
27	271235	TUBE / BUS To 6-8906	1				
28	271228	REINFORCEMENT / MTH		1	1	1	
28	271253	REINFORCEMENT / BUS	1				
29	260960	TUBE 202MM	4	4	4	4	
30	271290	ARCH / ROOF 1932.7MM (76")	1	1	1	1	
31	260789	REAR TUBE To 6-8906	1				
32	260749	TUBE 400MM To 6-8906	1				
33	260751	REAR RIGHT TUBE To 6-8906	1				
34	214341	PIPE SUPPORT To 6-8906	1				
35	260962	TUBE	2	2	2	2	
36	260963	TUBE	1	1	1	1	
40	271120	TUBE		2	2	2	
41	271122	TUBE		1	1	1	
42	271121	TUBE		1	1	1	
43	271117	TUBE		1	1	1	
50	**Y2-1890-10**	**STRUCTURE WALL - UPPER**					

From Y-7046 To 3-8164		Date:07/2024	PAGE:Y2-1894-05
REAR LH - STRUCTURE			

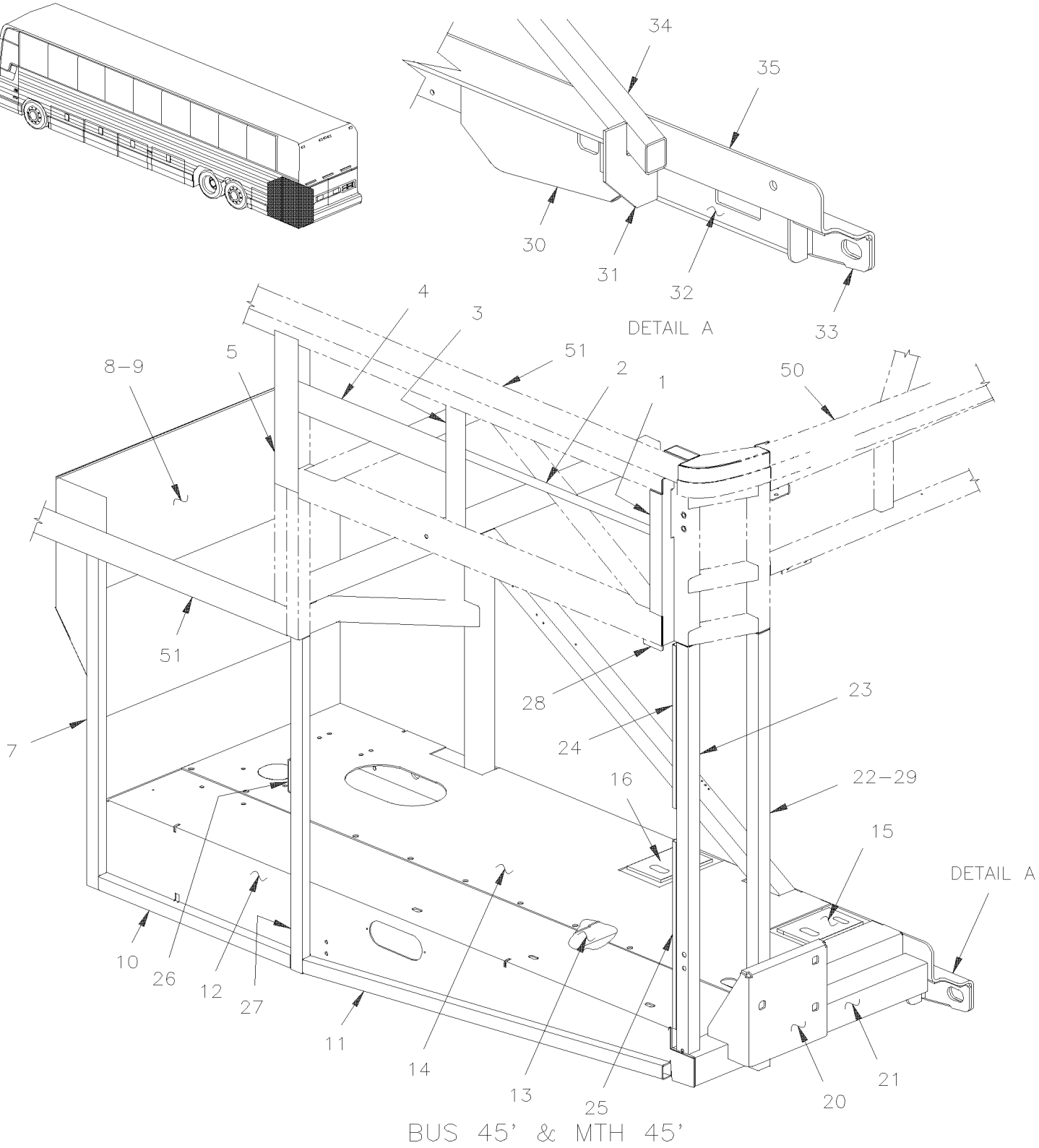

From Y-7046 To 3-8164		Date:07/2024	PAGE:Y2-1894-05
REAR LH - STRUCTURE			

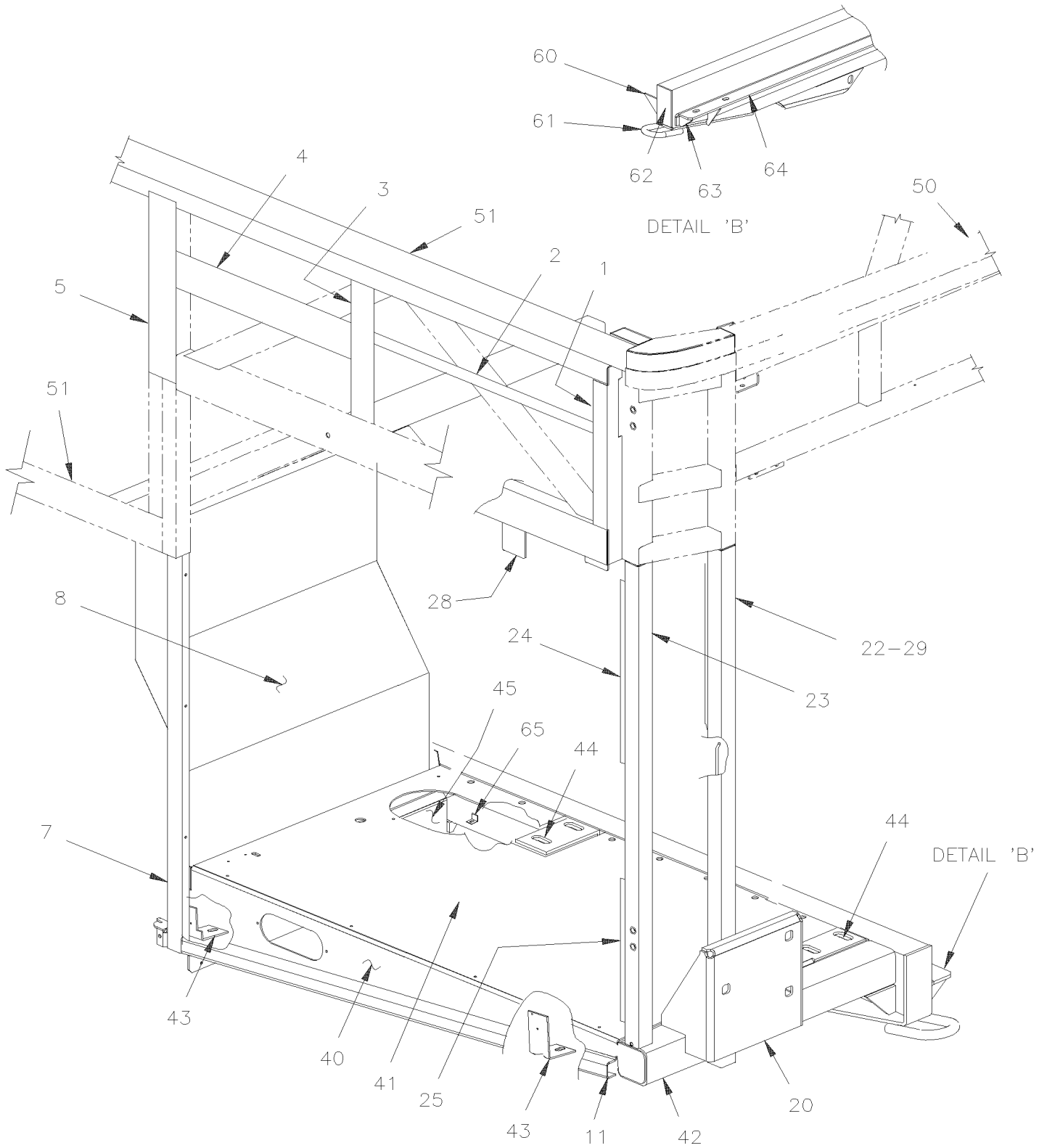

From Y-7046 To 3-8164		Date:07/2024	PAGE:Y2-1894-05

REAR LH - STRUCTURE

Item#	Part	Description	XLII 45	XLII MTH40	XLII MTH45	XLII MTH45E	NOTES
1	260811	ANGLE CURB-SIDE	1				
1	260761	ANGLE CURB-SIDE		1	1		
1	260806	ANGLE CURB-SIDE				1	
2	231280	SHAPED BAR LH		1	1	1	
3	231493	ANGLE LH	1				
4	231281	SHAPED BAR To 3-8044		1	1	1	
4	231601	SHAPED BAR From 3-8045		1	1	1	
5	231581	SHAPED BAR LH VERTICAL To 3-8044		1	1	1	
5	231604	SHAPED BAR LH VERTICAL From 3-8045		1	1	1	
7	214051	POST ASSY BACKWARD FENDER / STREETSIDE	1	1	1	1	
8	260831	FENDER PANEL STREETSIDE To 2-7764	1	1	1	1	
8	260860	FENDER PANEL STREETSIDE From 2-7765	1	1	1	1	
9	450119	SUPPORT RECEIVER TANK			1		
9	452375	SUPPORT RECEIVER TANK			1		
10	260742	TUBE 600MM To 2-7849	1		1		
11	260741	TUBE 1132MM To 2-7849	1	1	1	1	
12	260822	SIDE MEMBER RADIATOR FLOOR PANEL To 2-7849	1		1		
12	260912	SIDE MEMBER RADIATOR FLOOR PANEL From 2-7850	1		1		
13	260689	ANGLE MUFFLER SUPPORT / BACKWARD / 28 5/8"	1		1		
13	260662	ANGLE MUFFLER SUPPORT / FORWARD / 28 5/8"	1		1		
14	213749	FLOOR FAN RADIATOR To 2-7764	1		1		
14	214564	FLOOR FAN RADIATOR From 2-7765	1		1		
15	171792	SUPPORT FAN RADIATOR / BACKWARD	1		1		
15	212598	SUPPORT FAN RADIATOR	1		1		
16	171793	SUPPORT FAN RADIATOR / FORWARD	1		1		
20	213795	BRACKET BUMPER L.H. / (WELDED AT STRUCTURE) To 4-8181	1	1	1	1	
20	214637	BRACKET BUMPER L.H. & R.H. / (WELDED AT STRUCTURE) From 4-8182	1	1	1	1	
20	216083	BRACKET BUMPER L.H. & R.H. / (WELDED AT STRUCTURE)	1				R
21	260640	TUBE 726MM	1		1		
22	260730	TUBE INTERIOR / 1118MM	1	1	1	1	
23	260729	TUBE / STREETSIDE CORNER / 1043MM	1	1	1	1	
24	260827	SPACER "U" 417MM	1		1		
25	260826	SPACER "U" 478MM	1	1	1	1	
26	284534	SUPPORT STRIKER PIN	1		1		
27	260843	POST BACKWARD L.H. SERVICE DOOR / STREETSIDE	1		1		
28	286161	STRICKING PLATE	1	1	1	1	
29	212655	ATTACHMENT ROD / WELDED (TO FIX ANYTHING) / 373MM x 11MM DEEP	AR	AR	AR	AR	
30	171472	PROTECTOR L.H.	1		1		
31	260644	PLATE REINFORCEMENT	2		2		
32	172545	REINFORCEMENT L.H.	1		1		
33	172547	REINFORCEMENT L.H.	1		1		
34	171483	TUBE 1208MM	1		1		

From Y-7046 To 3-8164		Date:07/2024	PAGE:Y2-1894-05

REAR LH - STRUCTURE

Item#	Part	Description	XLII 45	XLII MTH 40	XLII MTH 45	XLII MTH 45E	NOTES
35	172540	BEAM L.H. "Z" FORM	1		1		
36	215083	ANGLE 190MM	4		4		
40	260823	SIDE MEMBER RADIATOR FLOOR PANEL To 2-7849		1		1	
40	260909	SIDE MEMBER RADIATOR FLOOR PANEL From 2-7850		1		1	
41	213748	PLATE, SUPPORT / FAN GEARBOX		1		1	
42	260160	TUBE 656MM		1		1	
43	260632	SUPPORT, ANGLE / MUFFLER (WELDED) To 2-7849		2		2	
43	260913	SUPPORT, ANGLE / MUFFLER (WELDED) From 2-7850		2		2	
44	212598	SUPPORT FAN RADIATOR		2		2	
45	260846	FENDER PANEL LOWER		1		1	
50	**Y2-1894-00**	**REAR CAP - STRUCTURE**					
51	**Y2-1891-00**	**LOWER WALL STRUCTURE - BUS**					
51	**Y2-1891-50**	**LOWER WALL STRUCTURE - MTH 40'**					
51	**Y2-1891-55**	**LOWER WALL STRUCTURE - MTH 45' ENT 86"**					
51	**Y2-1891-56**	**LOWER WALL STRUCTURE - MTH 45' ENT 89"**					
51	**Y2-1891-60**	**LOWER WALL STRUCTURE - MTH 45'**					
60	260259	REINFORCEMENT		2		2	
61	410293	EYE, TOW		1		1	
62	Call order desk	BEAM LOWER ASSY W/CLOSING END		1		1	P
63	010795	REINFORCEMENT, LOWER SUPPORT To Y-7279		2		2	
NS	172539	REINFORCEMENT From Y-7280		2		2	
63	172536	REINFORCEMENT From Y-7280		1		1	
64	171475	SUPPORT ENGINE CRADLE To Y-7279		1		1	
64	172535	SUPPORT ENGINE CRADLE From Y-7280		1		1	
65	211564	SUPPORT, ANGLE / MUFFLER (WELDED)		2		2	
		R) WITH OPTION REAR BUMPER "ROMEO RIM" SEE PAGE Y2-1850-15					
		P) CALL ORDER DESK FOR SPECIFIC APPLICATION (V.I.N.)					

From 4-8165 To 8-9339		Date:07/2024	PAGE:Y2-1894-06
REAR LH - STRUCTURE			

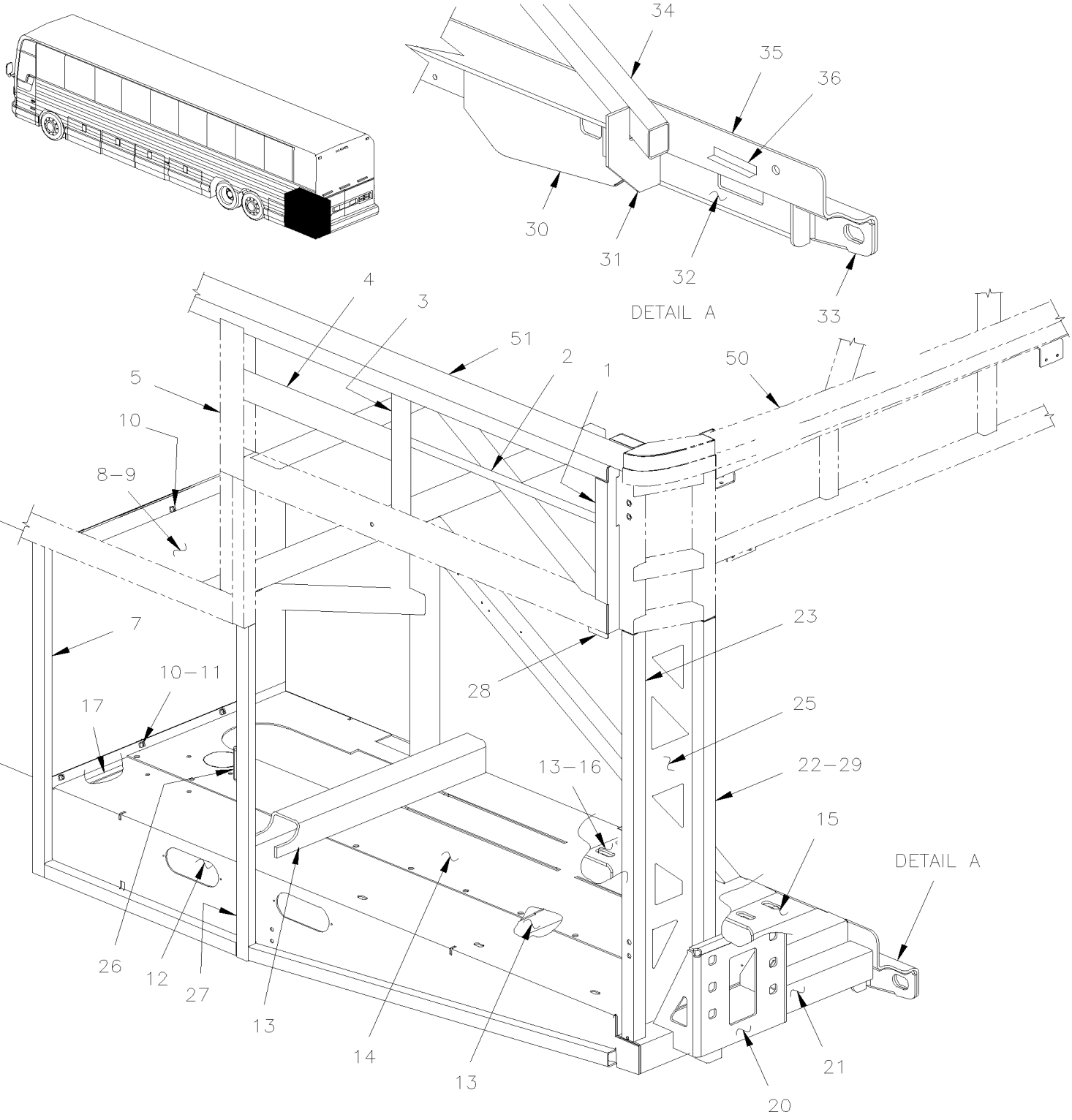

From 4-8165 To 8-9339		Date:07/2024	PAGE:Y2-1894-06
REAR LH - STRUCTURE			

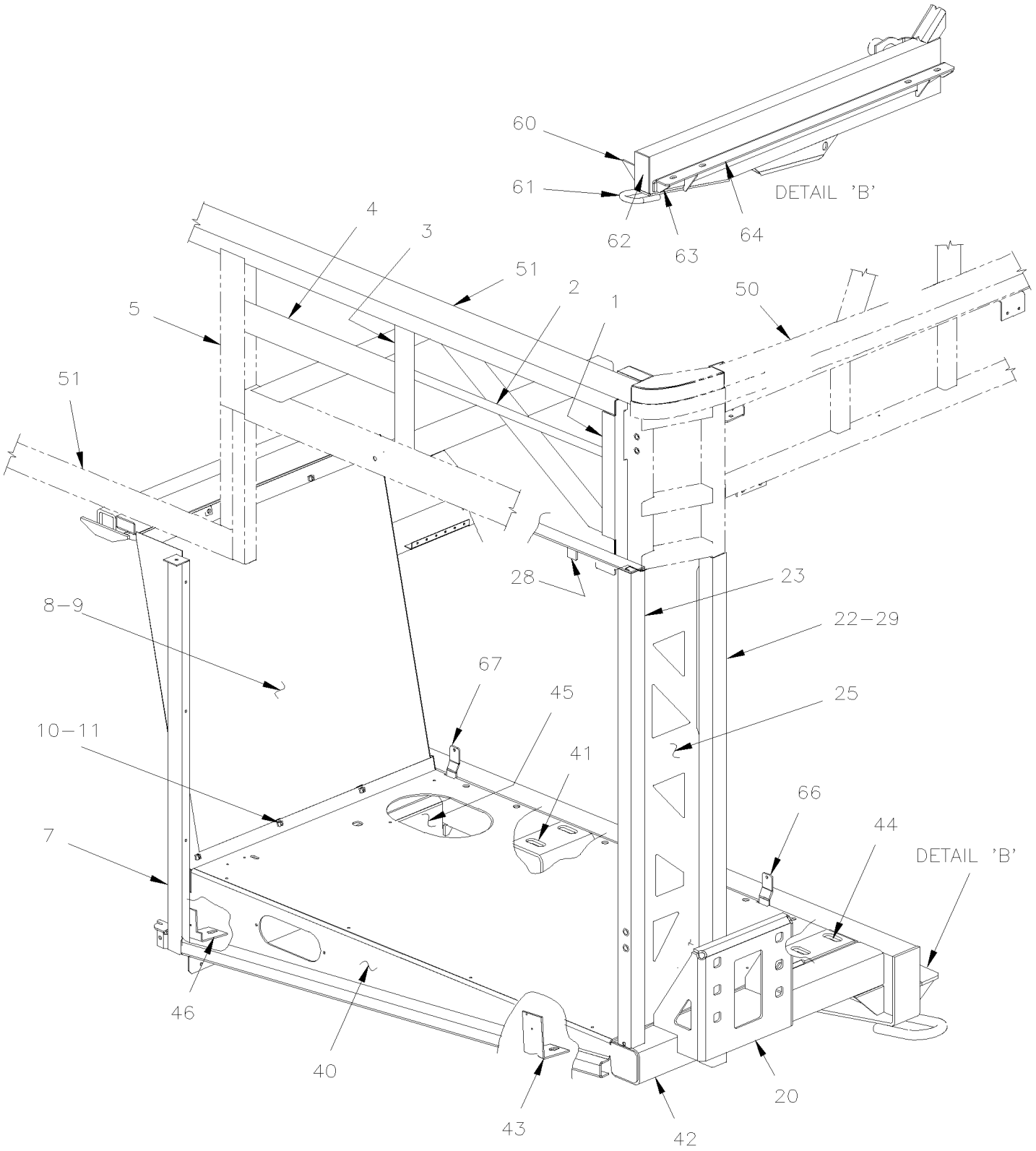

From 4-8165 To 8-9339		Date:07/2024	PAGE:Y2-1894-06

REAR LH - STRUCTURE

Item#	Part	Description	XLII 45	XLII MTH40	XLII MTH45	XLII MTH45E	NOTES
1	260811	ANGLE CURB-SIDE To 6-8906	1				
1	260761	ANGLE CURB-SIDE		1	1		
1	260806	ANGLE CURB-SIDE				1	
2	231280	SHAPED BAR LH		1	1	1	
3	231493	ANGLE LH To 6-8906	1				
4	231601	SHAPED BAR		1	1	1	
5	231604	SHAPED BAR LH VERTICAL		1	1	1	
7	214626	POST ASSY BACKWARD FENDER / STREETSIDE	1	1	1	1	
. NS	213939	. CATCH FENDER LOWER	1	1	1	1	
. NS	5001337	. NUT INS FL HEX M8-1.25 0.5-3.0 Z050	2	2	2	2	
. NS	5001344	. NUT INS FL HEX M6-1.0 0.5-3.0 SS	2	2	2	2	
8	260860	FENDER PANEL STREETSIDE To 6-8906	1				
8	260373	FENDER PANEL ASSY / STREETSIDE To 4-8295			1		
. NS	260375	. FENDER ACCESS PANEL To 4-8295			1		
. NS	5001009	. NUT AN 1/4 NYL To 4-8295			12		
. NS	5001184	. SCREW TP PAN PH #12x1/2 SS To 4-8295			12		
. NS	506002	. TAPE RUB ADH1 CC POL 3/16" x 1/2" x 40' / GREY 2520 To 4-8295			1		
8	215351	FENDER PANEL ASSY / STREETSIDE From 4-8296			1		
. NS	260375	. FENDER ACCESS PANEL From 4-8296			1		
. NS	955269	. SCREW CAP HEX M6-1.0x12 G8.8 ZG603 From 4-8296			12		
. NS	955920	. WASHER LO SPT 6.5x11.5x1.6 ZP From 4-8296			12		
. NS	506002	. TAPE RUB ADH1 CC POL 3/16" x 1/2" x 40' / GREY 2520 From 4-8296			1		
8	215074	FENDER PANEL ASSY / STREETSIDE To 4-8295		1		1	
. NS	260376	. FENDER ACCESS PANEL To 4-8295		1		1	
. NS	5001009	. NUT AN 1/4 NYL To 4-8295		12		12	
. NS	5001184	. SCREW TP PAN PH #12x1/2 SS To 4-8295		12		12	
. NS	506002	. TAPE RUB ADH1 CC POL 3/16" x 1/2" x 40' / GREY 2520 To 4-8295		1		1	
8	215348	FENDER PANEL ASSY / STREETSIDE From 4-8296		1		1	
. NS	260376	. FENDER ACCESS PANEL From 4-8296		1		1	
. NS	955269	. SCREW CAP HEX M6-1.0x12 G8.8 ZG603 From 4-8296		12		12	
. NS	955920	. WASHER LO SPT 6.5x11.5x1.6 ZP From 4-8296		12		12	
. NS	506002	. TAPE RUB ADH1 CC POL 3/16" x 1/2" x 40' / GREY 2520 From 4-8296		1		1	
9	260375	. FENDER ACCESS PANEL	1		1		
9	260376	. FENDER ACCESS PANEL		1		1	
NS	506002	. TAPE RUB ADH1 CC POL 3/16" x 1/2" x 40' / GREY 2520	AR	AR	AR	AR	
10	5001009	. NUT AN 1/4 NYL To 4-8295	12	12	12	12	
11	502848	. SCREW TC CAP HEXF 1/4-20x3/4 N500 To 4-8295	12	12	12	12	
11	955269	. SCREW CAP HEX M6-1.0x12 G8.8 ZG603 From 4-8296	12	12	12	12	
NS	955920	. WASHER LO SPT 6.5x11.5x1.6 ZP From 4-8296	12	12	12	12	
12	260865	FLOOR FAN RADIATOR To 4-8295	1		1		
12	215375	SIDE MEMBER RADIATOR FLOOR PANEL From 4-8296	1		1		
13	260864	ANGLE MUFFLER SUPPORT 755MM BACKWARD	1		1		

From 4-8165 To 8-9339		Date:07/2024	PAGE:Y2-1894-06

REAR LH - STRUCTURE

Item#	Part	Description	XLII 45	XLII MTH40	XLII MTH45	XLII MTH45E	NOTES
13	260947	SUPPORT MUFFLE "U" SHAPE 727MM / FORWARD	1		1		
14	214770	FLOOR FAN RADIATOR To 6-8906	1				
14	214572	FLOOR FAN RADIATOR To 4-8295			1		
14	215373	FLOOR FAN RADIATOR From 4-8296 To 4-8364			1		
15	260873	SUPPORT FAN RADIATOR / BACKWARD	1		1		
15	212598	SUPPORT FAN RADIATOR	1		1		
16	260874	SUPPORT FAN RADIATOR / FORWARD	1		1		
17	260863	ANGLE SUPPORT 727MM To 5-8523	1		1		
17	261000	ANGLE SUPPORT 727MM From 5-8524	1		1		
20	214637	BRACKET BUMPER L.H. & R.H. / (WELDED AT STRUCTURE)	1	1	1	1	
20	216083	BRACKET BUMPER L.H. & R.H. / (WELDED AT STRUCTURE)	1				R
21	260640	TUBE 726MM	1		1		
22	260889	TUBE INTERIOR / 1118MM	1	1	1	1	
23	260894	TUBE / STREETSIDE CORNER / 1043MM	1	1	1	1	
25	260959	REINFORCEMENT / POST From 4-8264	2	2	2	2	
26	284534	SUPPORT STRIKER PIN To 6-8906	1				
27	260887	POST BACKWARD L.H. SERVICE DOOR / STREETSIDE To 6-8906	1				
28	286161	STRICKING PLATE To 6-8906	1				
29	212655	ATTACHMENT ROD / WELDED (TO FIX ANYTHING) / 373MM x 11MM DEEP	AR	AR	AR	AR	
30	171472	PROTECTOR L.H. To 4-8345	1		1		
30	172650	PROTECTOR L.H. From 4-8346	1		1		
31	260891	FLOOR R.H.	1		1		
32	172545	REINFORCEMENT L.H.	1		1		
33	172547	REINFORCEMENT L.H.	1		1		
34	172655	TUBE 1224MM	1		1		
35	172540	BEAM L.H. "Z" FORM To 4-8345	1		1		
35	172853	BEAM L.H. "Z" FORM From 4-8346	1		1		
36	215083	ANGLE 190MM	4		4		
40	260964	SIDE MEMBER RADIATOR FLOOR PANEL		1		1	
41	172732	SUPPORT FAN RADIATOR / FORWARD		1		1	
42	260160	TUBE 656MM		1		1	
43	260936	SUPPORT, ANGLE / MUFFLER (WELDED)		1		1	
44	260931	SUPPORT FAN RADIATOR / BACKWARD		1		1	
45	260935	FENDER PANEL LOWER To 5-8523		1		1	
45	260999	FENDER PANEL LOWER From 5-8524		1		1	
46	260934	SUPPORT, ANGLE / MUFFLER (WELDED)		1		1	
46	260931	SUPPORT FAN RADIATOR / BACKWARD		1		1	
50	**Y2-1894-00**	**REAR CAP - STRUCTURE**					
51	**Y2-1891-00**	**LOWER WALL STRUCTURE - BUS**					
51	**Y2-1891-50**	**LOWER WALL STRUCTURE - MTH 40'**					
51	**Y2-1891-55**	**LOWER WALL STRUCTURE - MTH 45' ENT 86"**					
51	**Y2-1891-56**	**LOWER WALL STRUCTURE - MTH 45' ENT 89"**					

From 4-8165 To 8-9339		Date:07/2024	PAGE:Y2-1894-06

REAR LH - STRUCTURE

Item#	Part	Description	XLII 45	XLII MTH40	XLII MTH45	XLII MTH45E	NOTES
51	**Y2-1891-60**	**LOWER WALL STRUCTURE - MTH 45'**					
60	260259	REINFORCEMENT		2		2	
61	410293	EYE, TOW		1		1	
62	Call order desk	BEAM LOWER ASSY W/CLOSING END		1		1	P
63	172539	REINFORCEMENT		2		2	
63	172536	REINFORCEMENT		1		1	
64	172535	SUPPORT ENGINE CRADLE To 4-8345		1		1	
64	172844	SUPPORT ENGINE CRADLE From 4-8346		1		1	
65	217912	SUPPORT, ANGLE / MUFFLER (WELDED)		2		2	
66	Call order desk	ANGLE SUPPORT / BACKWARD		1		1	P
67	215085	ANGLE SUPPORT / FORWARD		1		1	
		R) WITH OPTION REAR BUMPER "ROMEO RIM" SEE PAGE Y2-1850-15					
		P) CALL ORDER DESK FOR SPECIFIC APPLICATION (V.I.N.)					

From Y-7046 To 7-9095		Date:07/2024	PAGE:Y2-1894-10
REAR RH - STRUCTURE			

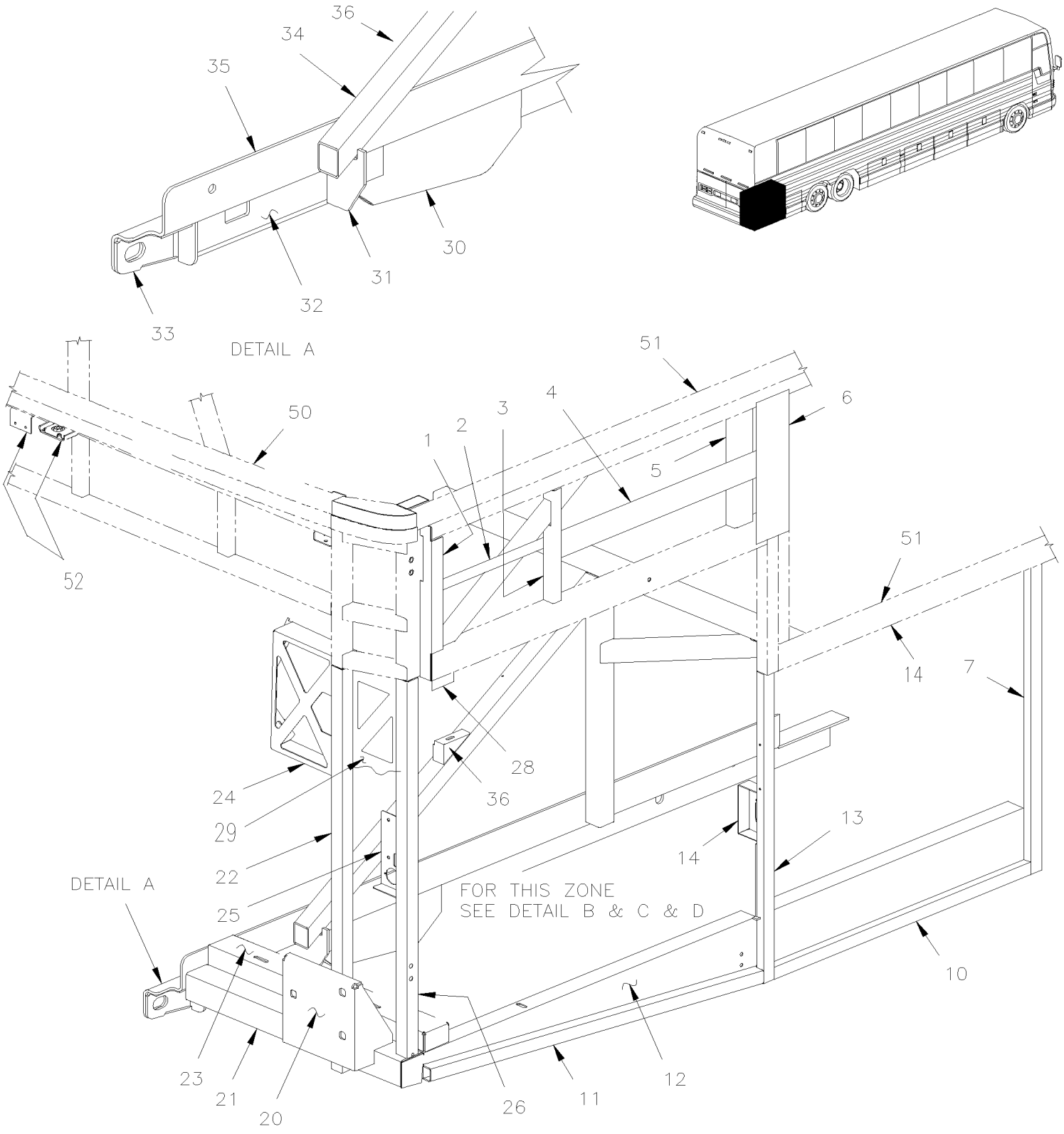

From Y-7046 To 7-9095		Date:07/2024	PAGE:Y2-1894-10
REAR RH - STRUCTURE			

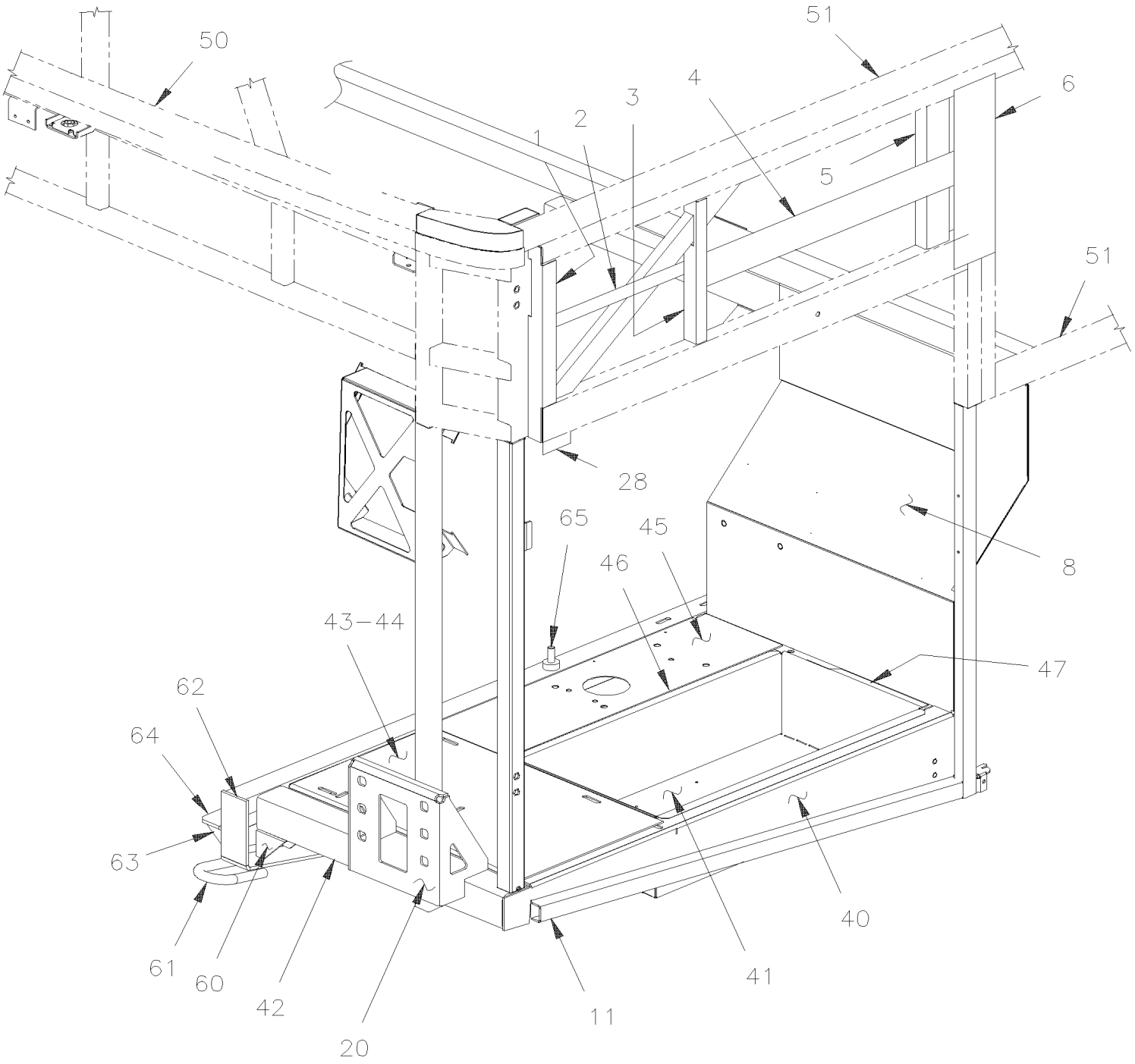

DETAIL ''D''

MTH 40' & MTH 45' ENT.

From Y-7046 To 7-9095		Date:07/2024	PAGE:Y2-1894-10
REAR RH - STRUCTURE			

MTH—45'

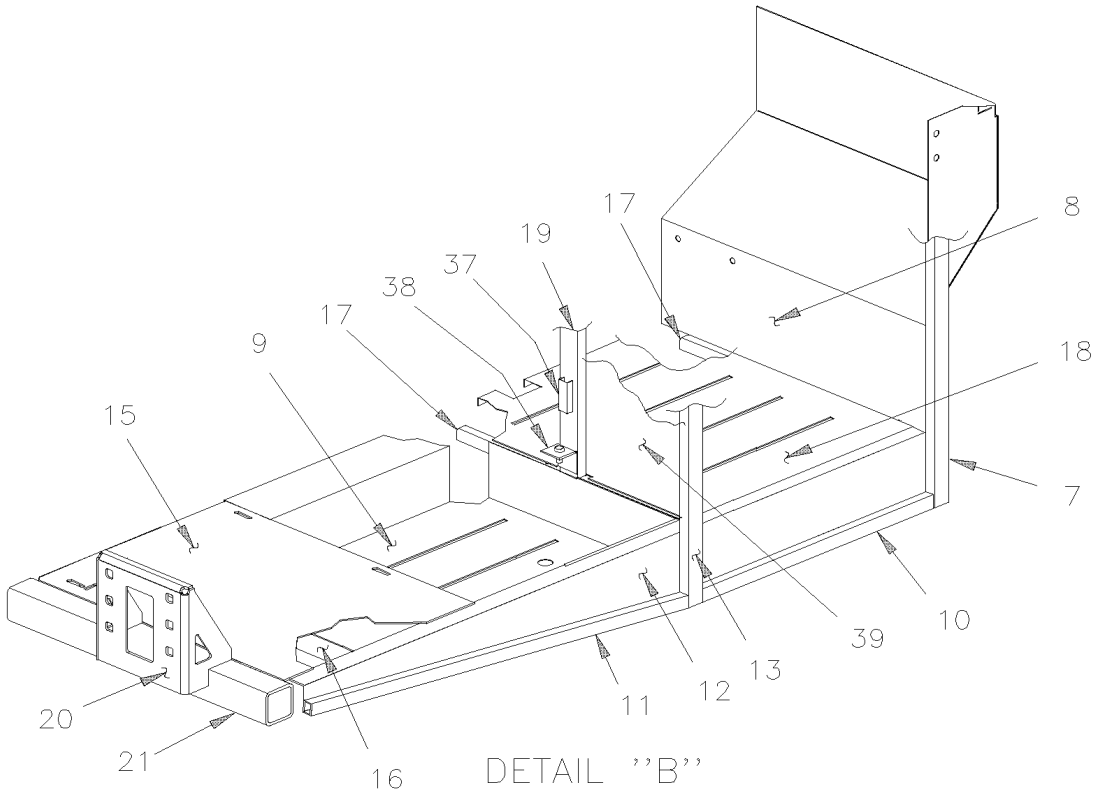

DETAIL ''B''

BUS—45'

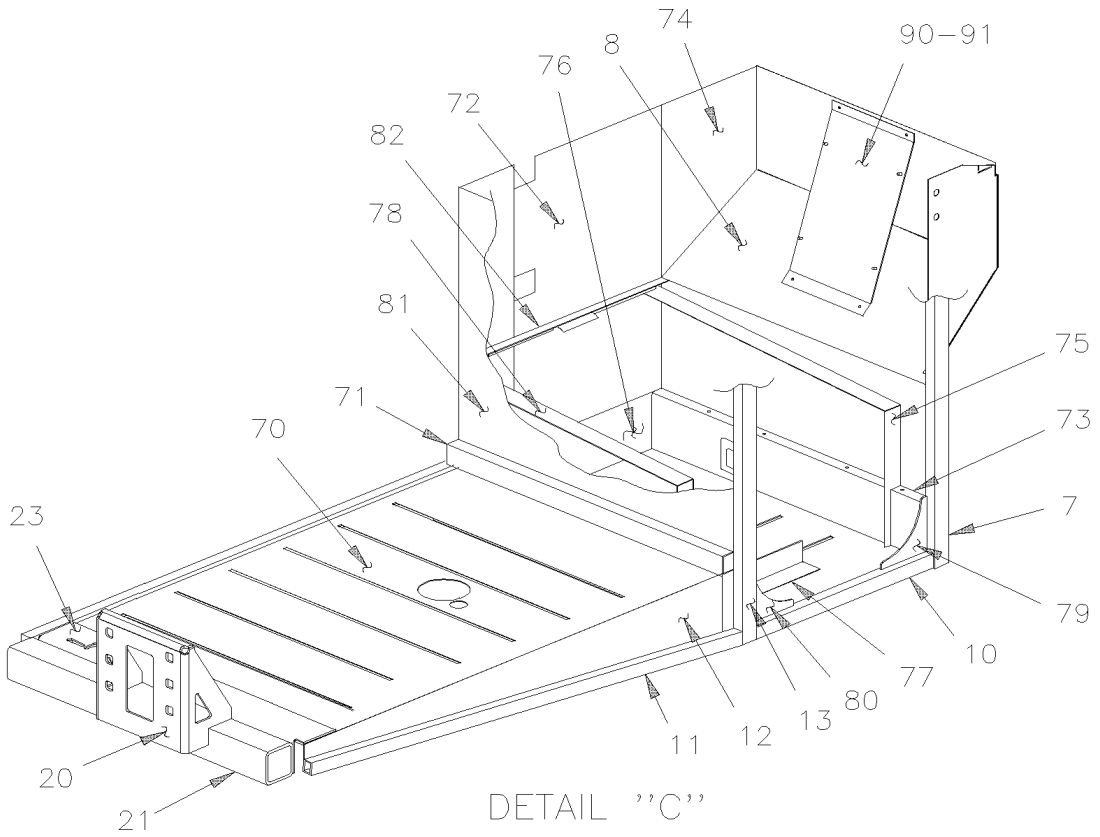

DETAIL ''C''

From Y-7046 To 7-9095		Date:07/2024	PAGE:Y2-1894-10

REAR RH - STRUCTURE

Item#	Part	Description	XLII 45	XLII MTH40	XLII MTH45	XLII MTH45E	NOTES
1	260812	ANGLE STREETSIDE To 6-8906	1				
1	260758	ANGLE STREETSIDE		1	1		
1	260801	ANGLE STREETSIDE				1	
2	231279	SHAPED BAR RH		1	1	1	
3	231494	ANGLE RH To 6-8906	1				
4	231281	SHAPED BAR To 3-8044		1	1	1	
4	231601	SHAPED BAR From 3-8045		1	1	1	
5	231278	SHAPED BAR		1	1		
5	231580	SHAPED BAR To 3-8044		1	1	1	
5	231604	SHAPED BAR LH VERTICAL From 3-8045		1	1		
6	473868	PANEL JUNCTION / S.B.		1	1		
7	214052	POST ASSY BACKWARD FENDER / CURBSIDE To 3-8164		1	1	1	
. NS	260726	. TUBE 857MM To 3-8164		1	1	1	
. NS	213942	. CATCH FENDER LOWER To 3-8164		1	1	1	
7	214627	POST ASSY BACKWARD FENDER / CURBSIDE From 4-8165	1	1	1	1	
. NS	213942	. CATCH FENDER LOWER From 4-8165	1	1	1	1	
8	260830	FENDER PANEL CURBSIDE	1	1	1	1	
9	260720	FLOOR BOX R.H. FOWARD COMPRESSOR BATTERIES SECTION			1		
10	260742	TUBE 600MM To 2-7849			1		
10	260742	TUBE 600MM	1				
11	260741	TUBE 1132MM To 2-7849	1	1	1	1	
12	260820	SIDE MEMBER FLOOR SUPPORT R.H. To 2-7849			1		
12	260821	SIDE MEMBER FLOOR SUPPORT R.H. To 2-7849	1	1		1	
12	260927	SIDE MEMBER FLOOR SUPPORT R.H. From 2-7850			1		
12	260902	SIDE MEMBER FLOOR SUPPORT R.H. From 2-7850	1	1		1	
13	260726	TUBE 857MM	1		1		
14	284534	SUPPORT STRIKER PIN To 6-8906	1				
15	260819	SUPPORT FLOOR A/C COMPRESSOR To 3-8164			1		
15	260893	SUPPORT FLOOR A/C COMPRESSOR From 4-8165			1		
16	260706	REINFORCEMENT "U" 725MM x 44MM			1		
17	260744	REINFORCEMENT "U" 725MM x 38MM To 5-8523			2		
17	261001	REINFORCEMENT "U" 725MM x 38MM From 8-8524			2		
18	260790	FLOOR R.H. / SERVICE COMPARTMENT			1		
19	260724	TUBE 712MM To 6-8805			1		
20	213755	BRACKET BUMPER R.H. / (WELDED AT STRUCTURE) To 4-8181	1	1	1	1	
20	214637	BRACKET BUMPER L.H. & R.H. / (WELDED AT STRUCTURE) From 4-8182	1	1	1	1	
20	216083	BRACKET BUMPER L.H. & R.H. / (WELDED AT STRUCTURE)	1				R
21	260640	TUBE 726MM	1		1		
22	260730	TUBE INTERIOR / 1118MM	1	1	1	1	
23	260824	SUPPORT REAR COMPRESSOR To 6-8906	1				
24	213702	SUPPORT AIR FILTER To 2-7767	1	1	1	1	
24	213951	SUPPORT AIR FILTER From 2-7768	1	1	1	1	

From Y-7046 To 7-9095		Date:07/2024	PAGE:Y2-1894-10

REAR RH - STRUCTURE

Item#	Part	Description	XLII 45	XLII MTH40	XLII MTH45	XLII MTH45E	NOTES
25	213957	SUPPORT BACK-UP ALARM To 1-7694	1	1	1	1	
25	214609	SUPPORT BACK-UP ALARM From 1-7695 To 2-7808	1	1	1	1	
25	219045	SUPPORT BACK-UP ALARM From 2-7809	1	1	1	1	
26	260750	TUBE / CURBSIDE CORNER / 1043MM	1	1	1	1	
. NS	5001337	. NUT INS FL HEX M8-1.25 0.5-3.0 Z050	4	4	4	4	
. NS	286161	. STRICKING PLATE	1	1	1	1	
27	215278	SUPPORT BACK-UP ALARM	1	1	1	1	
28	286161	STRICKING PLATE To 3-8164	1	1	1	1	
29	260959	REINFORCEMENT / POST	1	1	1	1	
30	171473	PROTECTOR R.H.	1		1		
31	260644	PLATE REINFORCEMENT	1		1		
31	260718	PLATE REINFORCEMENT	1		1		
32	171476	REINFORCEMENT R.H. To Y-7279	1		1		
32	172546	REINFORCEMENT R.H. From Y-7280	1		1		
33	171469	REINFORCEMENT R.H. To Y-7279	1		1		
33	172548	REINFORCEMENT R.H. From Y-7280	1		1		
34	171483	TUBE 1208MM To 3-8164	1		1		
34	172655	TUBE 1224MM From 4-8165	1		1		
35	171444	BEAM R.H. "Z" FORM To Y-7279	1		1		
35	172544	BEAM R.H. "Z" FORM From Y-7280 To 4-8345	1		1		
35	172852	BEAM R.H. "Z" FORM From 4-8346	1		1		
36	260714	SUPPORT	1				
37	121507	SUPPORT "U" 70MM To 6-8805			1		
38	212233	RETAINER BATERIE HOLDER To 6-8805			1		
39	260763	PANEL SUPPORT From 1-7441			1		
39	260858	PANEL SUPPORT From 1-7442 To 3-8164			1		
39	260940	PANEL SUPPORT From 4-8165 To 6-8805			1		
40	260821	SIDE MEMBER FLOOR SUPPORT R.H. To 2-7849		1		1	
40	260902	SIDE MEMBER FLOOR SUPPORT R.H. From 2-7850		1		1	
41	260837	FLOOR R.H. / BATTERIES COMPARTMENT		1		1	
42	260160	TUBE 656MM		1		1	
43	260851	SUPPORT FLOOR A/C COMPRESSOR		1		1	
44	260712	REINFORCEMENT 653MM x 44MM		1		1	
45	260838	FLOOR R.H. / REAR SIDE ENG CRADLE		1		1	
46	260850	SUPPORT "U" 708MM		1		1	
47	260844	SUPPORT "U" 655MM To 5-8523		1		1	
47	261003	SUPPORT "U" 655MM From 5-8524		1		1	
50	**Y2-1894-00**	**REAR CAP - STRUCTURE**					
51	**Y2-1891-00**	**LOWER WALL STRUCTURE - BUS**					
51	**Y2-1891-50**	**LOWER WALL STRUCTURE - MTH 40'**					
51	**Y2-1891-55**	**LOWER WALL STRUCTURE - MTH 45' ENT 86"**					
51	**Y2-1891-56**	**LOWER WALL STRUCTURE - MTH 45' ENT 89"**					

From Y-7046 To 7-9095		Date:07/2024	PAGE:Y2-1894-10

REAR RH - STRUCTURE

Item#	Part	Description	XLII 45	XLII MTH40	XLII MTH45	XLII MTH45E	NOTES
51	**Y2-1891-60**	**LOWER WALL STRUCTURE - MTH 45'**					
52	**Y2-1870-10**	**ENGINE DOOR ASSY - INSTALLATION**					
60	260259	REINFORCEMENT		2		2	
61	410293	EYE, TOW		1		1	
62	Call order desk	BEAM LOWER ASSY W/CLOSING END		1		1	P
63	010795	REINFORCEMENT, LOWER SUPPORT To Y-7279		2		2	
63	172539	REINFORCEMENT From Y-7280		2		2	
63	172536	REINFORCEMENT From Y-7280		1		1	
64	171474	SUPPORT R.H. To Y-7279		1		1	
64	172535	SUPPORT ENGINE CRADLE From Y-7280 To 4-8345		1		1	
64	172844	SUPPORT ENGINE CRADLE From 4-8346		1		1	
65	380360	STUD, GROUND (WELDED TO STRUCTURE) 1/2-13		1		1	
66	286133	ANGLE 12 x 20 x 595MM	1		1		
NS	286127	ANGLE 30 x 35 x 32MM	1		1		
70	260716	FLOOR R.H. / REAR To 3-8164	1				
70	260892	FLOOR R.H. / REAR From 4-8165 To 6-8906	1				
71	260842	SUPPORT SUMP TANK To 1-7590	1				
71	215487	SUPPORT SUMP TANK From 1-7591 To 6-8906	1				
72	260704	PANEL To 6-8906	1				
73	260698	REINFORCEMENT "U" 28 5/8" x 1 1/2" To 5-8523	1				
73	261002	SUPPORT "U" 728MM From 5-8524 To 6-8906	1				
74	260705	CLOSING PANEL SIDE FENDER To 6-8906	1				
75	212902	SUPPORT R.H. BATTERIES COVER To 6-8906	1				
76	212886	FLOOR R.H. / BATTERIES COMPARTMENT To 1-7590	1				
76	214542	FLOOR R.H. / BATTERIES COMPARTMENT From 1-7591 To 6-8906	1				
77	212657	SUPPORT FRONT COVER 523MM To 1-7590	1				
77	214536	ANGLE SUPPORT BATTERY COVER / FORWARD 200MM From 1-7591 To 6-8906	1				
78	212901	SUPPORT L.H. BATTERIES COVER To 6-8906	1				
79	214304	REINFORCEMENT "TRIANGULAR" 155MM To 6-8906	1				
80	260695	REINFORCEMENT "TRIANGULAR" 125MM To 6-8906	1				
81	260839	PANEL BACKWARD COMPATRMENT To 3-8020	1				
81	260859	PANEL BACKWARD COMPATRMENT From 3-8021 To 6-8906	1				
82	212658	SUPPORT BATTERY COVER / BACKWARD To 6-8906	1				
90	260686	SUPPORT "VANNER" To 6-8906	1				
90	065295	SUPPORT BATERIES CHARGER 110V To 6-8906	1				
		R) NO ENGLISH DESCRIPTION					
		P) CALL ORDER DESK FOR SPECIFIC APPLICATION (V.I.N.)					

From 7-9096 To 8-9339		Date:07/2024	PAGE:Y2-1894-11
REAR RH - STRUCTURE			

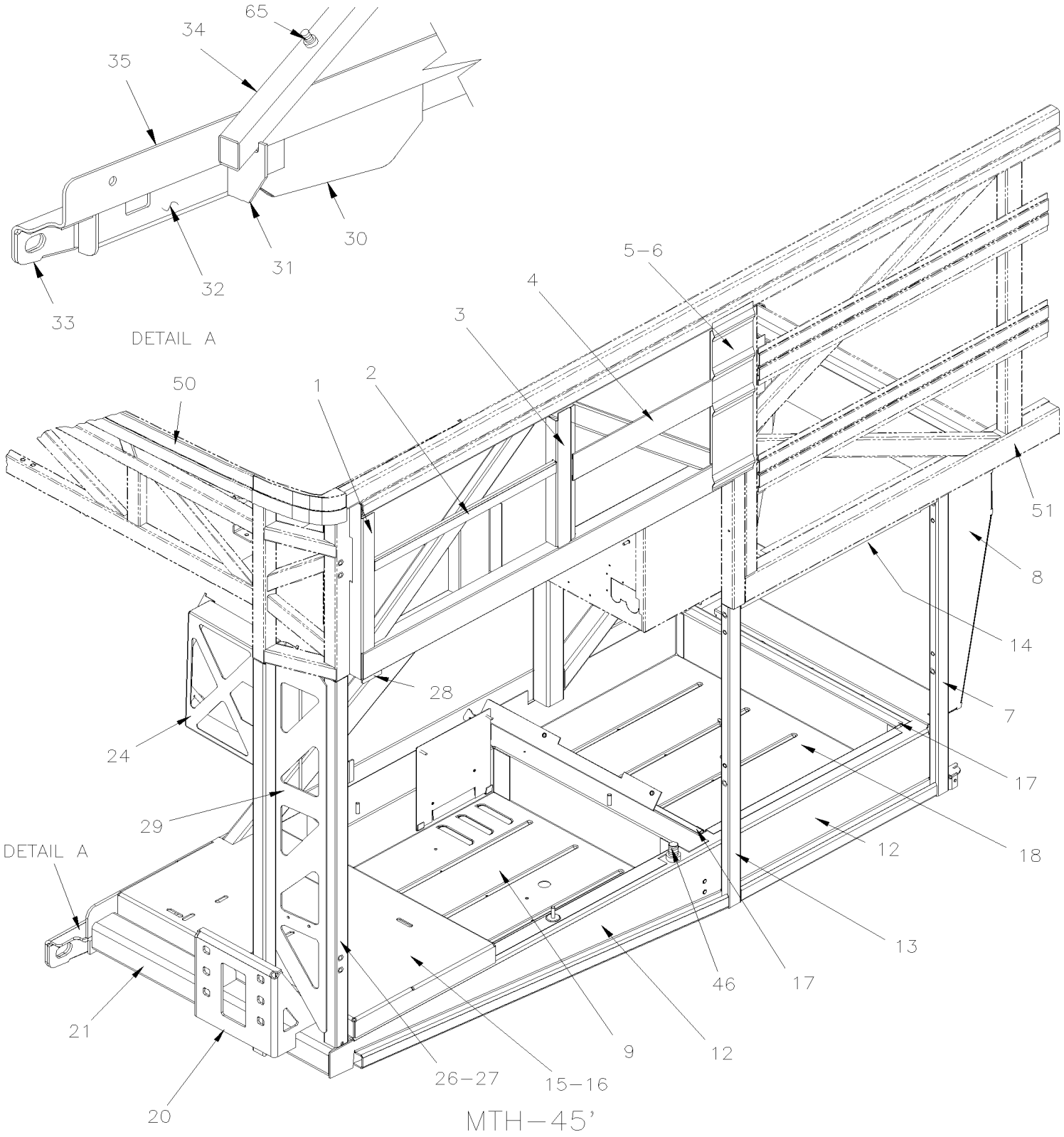

From 7-9096 To 8-9339		Date:07/2024	PAGE:Y2-1894-11
REAR RH - STRUCTURE			

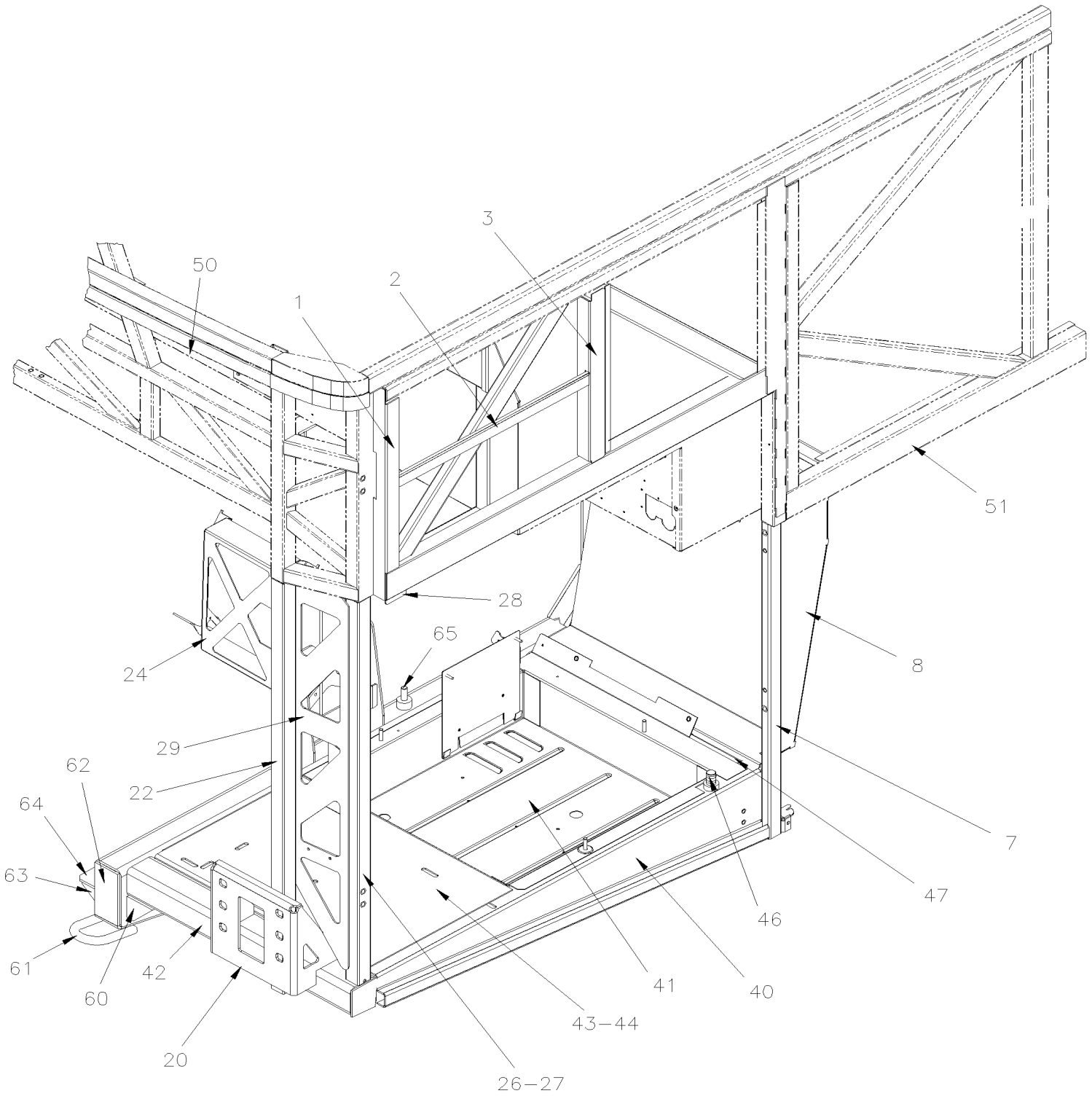

MTH–45' ENT.

From 7-9096 To 8-9339		Date:07/2024	PAGE:Y2-1894-11

REAR RH - STRUCTURE

Item#	Part	Description	XLII 45	XLII MTH40	XLII MTH45	XLII MTH45E	NOTES
1	260758	ANGLE STREETSIDE			1		
1	260801	ANGLE STREETSIDE				1	
2	231279	SHAPED BAR RH			1		
3	231602	SHAPED BAR			1		
4	231601	SHAPED BAR			1	1	
5	231580	SHAPED BAR			1		
5	231604	SHAPED BAR LH VERTICAL			1		
6	477611	PANEL JUNCTION / B.A.			1		
7	261151	POST ASSY BACKWARD FENDER / CURBSIDE			1	1	
. NS	213942	. CATCH FENDER LOWER			1	1	
. NS	5001337	. NUT INS FL HEX M8-1.25 0.5-3.0 Z050			2	2	
. NS	5001344	. NUT INS FL HEX M6-1.0 0.5-3.0 SS			2	2	
8	261145	FENDER PANEL CURBSIDE			1	1	
9	261156	FLOOR BOX R.H. FOWARD COMPRESSOR BATTERIES SECTION			1		
12	260927	SIDE MEMBER FLOOR SUPPORT R.H.			1		
13	261150	TUBE 857MM			1		
. NS	289416	. SUPPORT KETCH			1		
. NS	5001337	. NUT INS FL HEX M8-1.25 0.5-3.0 Z050			2		
. NS	5001344	. NUT INS FL HEX M6-1.0 0.5-3.0 SS			2		
14	286133	ANGLE 12 x 20 x 595MM			1		
14	286127	ANGLE 30 x 35 x 32MM			1		
15	Call order desk	SUPPORT FLOOR A/C COMPRESSOR To 8-9371			1		P
15	261171	SUPPORT FLOOR A/C COMPRESSOR From 8-9372			1		
16	260706	REINFORCEMENT "U" 725MM x 44MM			1		
17	261001	REINFORCEMENT "U" 725MM x 38MM To 8-9371			2		
17	261004	REINFORCEMENT "U" 655MM x 38MM From 8-9372			2		
18	261161	FLOOR R.H. / SERVICE COMPARTMENT To 8-9371			1		
18	261005	FLOOR R.H. / SERVICE COMPARTMENT From 8-9372			1		
20	214637	BRACKET BUMPER L.H. & R.H. / (WELDED AT STRUCTURE) To 8-9371			1	1	
20	216033	BRACKET BUMPER L.H. & R.H. / (WELDED AT STRUCTURE) From 8-9372			1	1	
21	260640	TUBE 726MM To 8-9371			1		
21	261159	TUBE 657MM From 8-9372			1		
22	260889	TUBE INTERIOR / 1118MM			1	1	
24	213951	SUPPORT AIR FILTER			1	1	
26	260750	TUBE / CURBSIDE CORNER / 1043MM To 8-9371			1	1	
. NS	5001337	. NUT INS FL HEX M8-1.25 0.5-3.0 Z050 To 8-9371			4	4	
. NS	286161	. STRICKING PLATE To 8-9371			1	1	
26	261131	TUBE / CURBSIDE CORNER / 1046MM From 8-9372			1	1	
. NS	5001337	. NUT INS FL HEX M8-1.25 0.5-3.0 Z050 From 8-9372			2	2	
27	215278	SUPPORT BACK-UP ALARM To 8-9371			1	1	
27	216100	SUPPORT BACK-UP ALARM From 8-9372			1	1	
28	286161	STRICKING PLATE			1	1	

From 7-9096 To 8-9339		Date:07/2024	PAGE:Y2-1894-11

REAR RH - STRUCTURE

Item#	Part	Description	XLII 45	XLII MTH40	XLII MTH45	XLII MTH45E	NOTES
29	260959	REINFORCEMENT / POST To 8-9371			1	1	
29	261173	REINFORCEMENT / POST From 8-9372			1	1	
30	171473	PROTECTOR R.H.			1		
31	260939	PLATE REINFORCEMENT			1		
32	172546	REINFORCEMENT R.H.			1		
33	172548	REINFORCEMENT R.H.			1		
34	172655	TUBE 1224MM			1		
34	173354	TUBE 1248MM			1		
34	173357	TUBE / W/SLIDE-OUT / 1159MM			1		
35	172852	BEAM R.H. "Z" FORM			1		
39	260763	PANEL SUPPORT			1		
40	260902	SIDE MEMBER FLOOR SUPPORT R.H.				1	
41	261143	FLOOR R.H. / BATTERIES COMPARTMENT				1	
42	261125	FORM R.H. SUPPORT 659MM x 90MM				1	
43	261144	SUPPORT FLOOR A/C COMPRESSOR To 8-9371				1	
43	261152	SUPPORT FLOOR A/C COMPRESSOR From 8-9372				1	
44	260712	REINFORCEMENT 653MM x 44MM				1	
46	382101	STUD, GROUND (WELDED TO STRUCTURE)			1	1	
47	261003	SUPPORT "U" 655MM				1	
50	**Y2-1894-00**	**REAR CAP - STRUCTURE**					
51	**Y2-1891-56**	**LOWER WALL STRUCTURE - MTH 45' ENT 89"**					
51	**Y2-1891-60**	**LOWER WALL STRUCTURE - MTH 45'**					
52	**Y2-1870-10**	**ENGINE DOOR ASSY - INSTALLATION**					
60	260259	REINFORCEMENT				2	
61	410293	EYE, TOW				1	
62	Call order desk	BEAM LOWER ASSY W/CLOSING END				1	P
63	172539	REINFORCEMENT				2	
63	172536	REINFORCEMENT				1	
64	172844	SUPPORT ENGINE CRADLE				1	
65	380360	STUD, GROUND (WELDED TO STRUCTURE) 1/2-13			1	1	
66	261005	FLOOR R.H. / SERVICE COMPARTMENT			1	1	
		P) CALL ORDER DESK FOR SPECIFIC APPLICATION (V.I.N.)					

From Y-7046 To 8-9339		Date:07/2024	PAGE:Y2-1895-00
FRONT STRUCTURE			

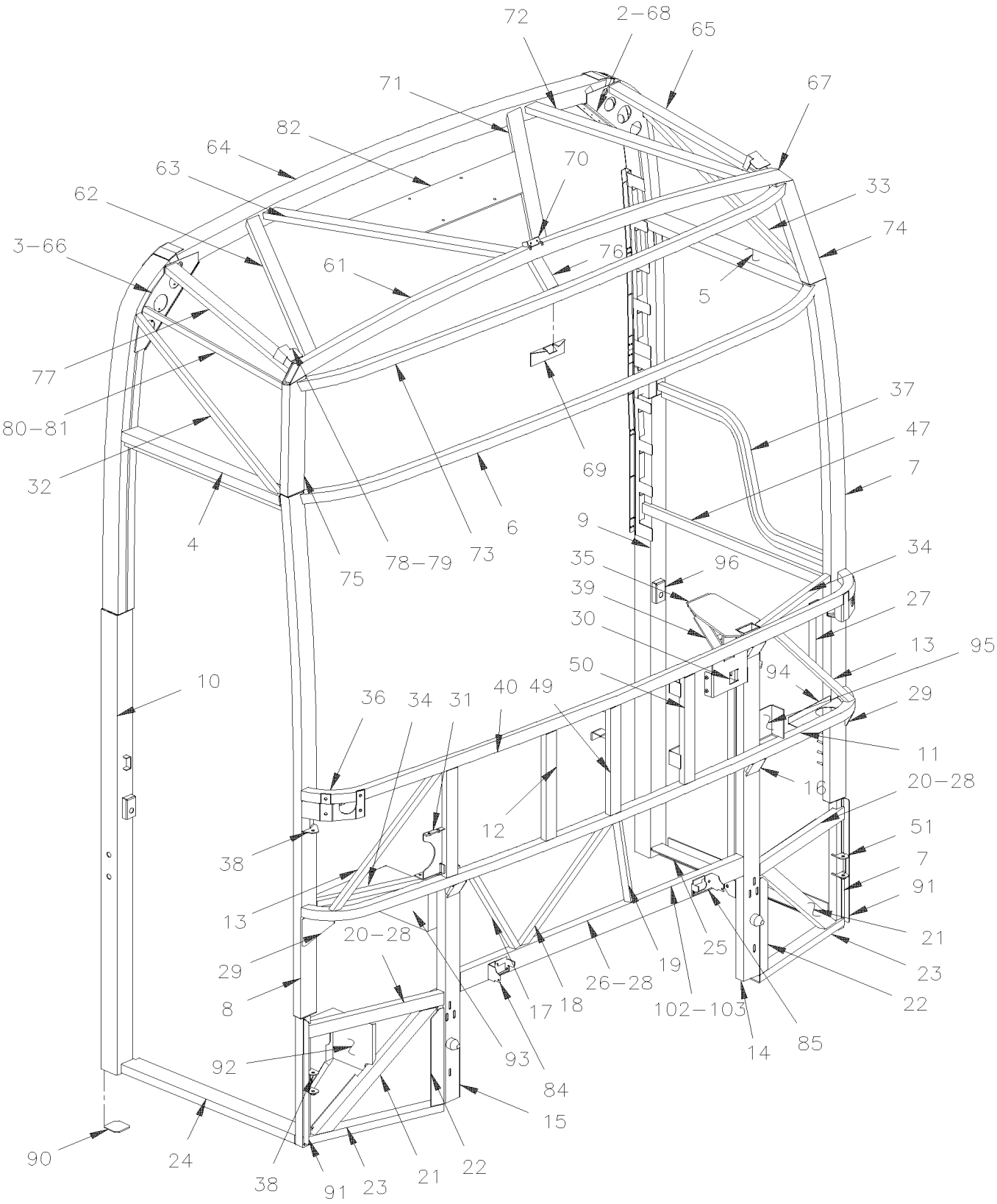

From Y-7046 To 8-9339		Date:07/2024	PAGE:Y2-1895-00

FRONT STRUCTURE

Item#	Part	Description	XLII 45	XLII MTH40	XLII MTH45	XLII MTH45E	NOTES
	251006P	FRONT STRUCTURE ASSY W/FRONT ROOF / 80" To 6-8906	1				
	251003P	FRONT STRUCTURE ASSY W/FRONT ROOF / 86"		1	1	1	
	250951P	FRONT STRUCTURE ASSY W/FRONT ROOF / 83"		1	1		
	251005P	FRONT STRUCTURE ASSY W/FRONT ROOF / 89"				1	
2	251092	. REAR REINFORCEMENT PLATE L.H.	1	1	1	1	
3	251093	. REAR REINFORCEMENT PLATE R.H.	1	1	1	1	
4	251074	. TUBE ASSY UPPER DOOR	1	1	1	1	
4	251214	. . TUBE	1	1	1	1	
4	251077	. . PLATE 743.6MM X 3/16"	1	1	1	1	
5	251064	. TUBE ASSY UPPER DRIVER WINDOW	1	1	1	1	
5	250952	. . TUBE	1	1	1	1	
5	251057	. . PLATE 743.6MM X 3/16"	1	1	1	1	
6	250928	. TUBE / WITH SMALL WINDSHIELD ONLY		1	1	1	
7	250985	. POST ASSY FRONT L.H. To 5-8358	1				
7	251217	. POST ASSY FRONT L.H. From 5-8359 To 6-8906	1				
. A	251553	. . TUBE LOWER 1"½ X 1"½ X 521MM From 5-8359 To 6-8906	1				
. B	251218	. . TUBE 1½" X 3" X 1856MM From 5-8359 To 6-8906	1				
. C	251055	. . SEAL DOOR BAR UPPER 974MM From 5-8359 To 6-8906	1				
. D	251033	. . HINGE SUPPORT LOWER From 5-8359 To 6-8906	1				
. E	250962	. . CLOSING PLATE / UPPER TUBE 33 X 71MM From 5-8359 To 6-8906	2				
. F	251096	. . SEAL DOOR BAR LOWER 1232MM From 5-8359 To 6-8906	1				
. G	251082	. . HINGE SUPPORT UPPER From 5-8359 To 6-8906	1				
. H	502737	. . SCREW CAP HEX M6-1.0x25 SS BK From 5-8359 To 6-8906	4				
. I	251221	. . STOPPER DOOR From 5-8359 To 6-8906	1				
7	250997	. POST ASSY FRONT L.H. / MTH 83" To Y-7128		1	1		
7	250993	. POST ASSY FRONT L.H. / MTH 86" To 5-8358		1	1	1	
7	251551	. POST ASSY FRONT L.H. / MTH 86" From 5-8359		1	1	1	
7	250989	. POST ASSY FRONT L.H. / MTH 89" To 5-8358				1	
7	251558	. POST ASSY FRONT L.H. / MTH 89" From 5-8359				1	
7	250926	. . TUBE 1½" X 3" X 1883MM To 5-8358	1				
7	251218	. . TUBE 1½" X 3" X 1856MM From 5-8359 To 6-8906	1				
7	250920	. . TUBE 1½" X 3" X 1960MM / MTH 83" To Y-7128		1	1		
7	250922	. . TUBE 1½" X 3" X 2036MM / MTH 86" To 5-8358		1	1	1	
7	251554	. . TUBE 1½" X 3" X 2008MM / MTH 86" From 5-8359		1	1	1	
7	250924	. . TUBE 1½" X 3" X 2112MM / MTH 89" To 5-8358				1	
7	251559	. . TUBE 1½" X 3" X 2085MM / MTH 89" From 5-8359				1	
7	251096	. . SEAL DOOR BAR LOWER 1232MM To 6-8906	1				
7	251060	. . SEAL DOOR BAR LOWER 1309MM To Y-7128		1	1		
7	251071	. . SEAL DOOR BAR LOWER 1038MM		1	1	1	
7	251072	. . SEAL DOOR BAR LOWER 1461MM				1	
7	251055	. . SEAL DOOR BAR UPPER 974MM	1	1	1	1	
7	250962	. . CLOSING PLATE / UPPER TUBE 33 X 71MM	1	1	1	1	

From Y-7046 To 8-9339		Date:07/2024	PAGE:Y2-1895-00

FRONT STRUCTURE

Item#	Part	Description	XLII 45	XLII MTH40	XLII MTH45	XLII MTH45E	NOTES
7	251082	. . HINGE SUPPORT UPPER	1	1	1	1	
7	251033	. . HINGE SUPPORT LOWER	1	1	1	1	
7	250935	. . TUBE LOWER 1"½ X 1"½ X 497MM To 5-8358	1	1	1	1	
7	251553	. . TUBE LOWER 1"½ X 1"½ X 521MM From 5-8359	1	1	1	1	
7	251221	. . STOPPER DOOR From 5-8359	1	1	1	1	
7	502737	. SCREW CAP HEX M6-1.0x25 SS BK	4	4	4	4	
8	250986	. POST ASSY FRONT R.H. To 5-8358	1				
8	251219	. POST ASSY FRONT R.H. From 5-8359 To 6-8906	1				
. A	251553	. . TUBE LOWER 1"½ X 1"½ X 521MM From 5-8359 To 6-8906	1				
. B	251220	. . TUBE 1½" X 3" X 1856MM From 5-8359 To 6-8906	1				
. C	251020	. . SEAL DOOR BAR 2272MM From 5-8359 To 6-8906	1				
. D	251001	. . HINGE SUPPORT / LOWER From 5-8359 To 6-8906	1				
. E	250962	. . CLOSING PLATE / UPPER TUBE 33 X 71MM From 5-8359 To 6-8906	2				
. F	251083	. . HINGE SUPPORT / UPPER From 5-8359 To 6-8906	1				
8	250998	. POST ASSY FRONT R.H. / MTH 83" To Y-7128		1	1		
8	250994	. POST ASSY FRONT R.H. / MTH 86" To 5-8358		1	1	1	
8	251552	. POST ASSY FRONT R.H. / MTH 86" From 5-8359		1	1	1	
8	250990	. POST ASSY FRONT R.H. / MTH 89" To 5-8358				1	
8	251557	. POST ASSY FRONT R.H. / MTH 89" From 5-8359				1	
8	250927	. . TUBE 1" X 3" X 1883MM To 5-8358	1				
8	251220	. . TUBE 1½" X 3" X 1856MM From 5-8359 To 6-8906	1				
8	250921	. . TUBE 1" X 3" X 1960MM / MTH 83" To Y-7128		1	1		
8	250923	. . TUBE 1" X 3" X 2036MM / MTH 86" To 5-8358		1	1	1	
8	251555	. . TUBE 1" X 3" X 2008MM / MTH 86" From 5-8359		1	1	1	
8	250925	. . TUBE 1" X 3" X 2112MM / MTH 89" To 5-8358				1	
8	251560	. . TUBE 1" X 3" X 2085MM / MTH 89" From 5-8359				1	
8	251020	. . SEAL DOOR BAR 2272MM To 6-8906	1				
8	251010	. . SEAL DOOR BAR 2355MM To Y-7128		1	1		
8	251016	. . SEAL DOOR BAR UPPER 1038MM		1	1	1	
8	251072	. . SEAL DOOR BAR LOWER 1461MM				1	
8	250962	. . CLOSING PLATE / UPPER TUBE 33 X 71MM	1	1	1	1	
8	251083	. . HINGE SUPPORT / UPPER	1	1	1	1	
8	251001	. . HINGE SUPPORT / LOWER	1	1	1	1	
8	250935	. TUBE LOWER 1"½ X 1"½ X 497MM To 5-8358	1	1	1	1	
8	251553	. TUBE LOWER 1"½ X 1"½ X 521MM From 5-8359	1	1	1	1	
9	250987	. POST ASSY REAR L.H. To 6-8906	1				
. A	250984	. . TUBE 3"X3" X 1684MM To 6-8906	1				
. B	271091	. . TUBE UPPER / BUS & MTH 83" To 6-8906	1				
. C	271088	. . PLATE JUNCTION / CENTER OF PO 73MM X 76MM To 6-8906	1				
. D	251094	. . DOUBLE To 6-8906	1				
. E	271187	. . CABLE SUPPORT To 6-8906	2				
. F	251056	. . SEAL DOOR BAR UPPER 579MM / BUS & MTH 83" To 6-8906	1				

From Y-7046 To 8-9339		Date:07/2024	PAGE:Y2-1895-00

FRONT STRUCTURE

Item#	Part	Description	XLII 45	XLII MTH40	XLII MTH45	XLII MTH45E	NOTES
. G	251114	. . SEAL DOOR BAR LOWER 1630MM To 6-8906	1				
. H	5001112	. . STUD WD WOC M6-1.0X12 SS To 6-8906	3				
. J	231497	. . PLATE WITH TOOTH 759MM x 23MM To 6-8906	1				
9	250999	. POST ASSY REAR L.H. / MTH 83" To Y-7128		1	1		
9	250995	. POST ASSY REAR L.H. / MTH 86"		1	1	1	
9	250982	. POST ASSY REAR L.H. / MTH 89"				1	
9	250984	. . TUBE 3"X3" X 1684MM To 6-8906	1				
9	271086	. . TUBE / MTH 83" & MTH 86" / 3" X 3" X 1760MM		1	1	1	
9	271244	. . TUBE 3" X 3" X 1836MM / MTH 89"				1	
9	271091	. . TUBE UPPER / BUS & MTH 83"	1	1	1		
9	271090	. . TUBE UPPER / 1352MM / MTH 86" & MTH 89"		1	1	1	
9	Call order desk	. . TUBE INTERIOR / BUS & MTH 83" / 1037MM	1	1	1		P
9	251098	. . TUBE INTERIOR / MTH 86" & MTH 89" / 1114MM		1	1	1	
9	251114	. . SEAL DOOR BAR LOWER 1630MM To 6-8906	1				
9	251059	. . SEAL DOOR BAR LOWER 1707MM /MTH 83" & MTH		1	1	1	
9	251113	. . SEAL DOOR BAR LOWER 1781MM / MTH 89"				1	
9	251056	. . SEAL DOOR BAR UPPER 579MM / BUS & MTH 83"	1	1	1		
9	251078	. . SEAL DOOR BAR UPPER 656MM / MTH 86" & MTH		1	1	1	
9	271088	. . PLATE JUNCTION / CENTER OF PO 73MM X 76MM	1	1	1	1	
9	271187	. . CABLE SUPPORT	2	2	2	2	
10	250988	. POST ASSY REAR R.H. To 6-8906	1				
. A	251167	. . TUBE ASSY 3" X 3" X 1684MM To 6-8906	1				
. B	271091	. . TUBE UPPER / BUS & MTH 83" To 6-8906	1				
. C	271088	. . PLATE JUNCTION / CENTER OF PO 73MM X 76MM To 6-8906	1				
. D	251094	. . DOUBLE To 6-8906	1				
. E	251021	. . SEAL DOOR BAR 2274MM To 6-8906	1				
. F	231497	. . PLATE WITH TOOTH 759MM x 23MM To 6-8906	1				
10	251000	. POST ASSY REAR R.H. / MTH 83" To Y-7128		1	1		
10	250996	. POST ASSY REAR R.H. / MTH 86"		1	1	1	
10	250983	. POST ASSY REAR R.H. / MTH 89"				1	
10	251167	. . TUBE ASSY 3" X 3" X 1684MM To 6-8906	1				
10	271086	. . TUBE / MTH 83" & MTH 86" / 3" X 3" X 1760MM		1	1	1	
10	271244	. . TUBE 3" X 3" X 1836MM / MTH 89"				1	
10	271091	. . TUBE UPPER / BUS & MTH 83"	1	1	1		
10	271090	. . TUBE UPPER / 1352MM / MTH 86" & MTH 89"		1	1	1	
10	Call order desk	. . TUBE INTERIOR / BUS & MTH 83" / 1037MM	1	1	1		P
10	251098	. . TUBE INTERIOR / MTH 86" & MTH 89" / 1114MM		1	1	1	
10	251021	. . SEAL DOOR BAR 2274MM	1	1	1		
10	251011	. . SEAL DOOR BAR / MTH 83" To Y-7128		1	1		
10	251016	. . SEAL DOOR BAR UPPER 1038MM	1	1	1		
10	251019	. . SEAL DOOR BAR / MTH 89"				1	
10	251463	. . SEAL DOOR BAR LOWER 1463MM / MTH 89"				1	

From Y-7046 To 8-9339		Date:07/2024	PAGE:Y2-1895-00

FRONT STRUCTURE

Item#	Part	Description	XLII 45	XLII MTH40	XLII MTH45	XLII MTH45E	NOTES
10	271088	. . PLATE JUNCTION / CENTER OF PO 73MM X 76MM	1	1	1	1	
10	251012	. . STRIKER PIN RETAINER		1	1	1	
10	251085	. . CATCH / DOOR LOCK RETAINER		1	1	1	
11	250929	. TUBE	1	1	1	1	
12	251031	. TUBE To 6-8906	1				
12	251028	. TUBE / MTH 83" To Y-7128		1	1		
12	251029	. TUBE / MTH 86"		1	1	1	
12	251030	. TUBE / MTH 89"				1	
13	251046	. TUBE To 6-8906	2				
13	251042	. TUBE / MTH 83" To Y-7128		2	2		
13	251044	. TUBE / MTH 86"		2	2	2	
13	251045	. TUBE / MTH 89"		2	2	2	
14	251039	. TUBE L.H. ASSY / 1253MM To 6-8906	1				
14	251036	. TUBE L.H. ASSY / MTH 83" / 1329MM To Y-7128		1	1		
14	251037	. TUBE L.H. ASSY / MTH 86" / 1405MM		1	1	1	
14	251038	. TUBE L.H. ASSY / MTH 89" / 1482MM				1	
14	251009	. . TUBE L.H. / 1253MM To 6-8906	1				
14	250943	. . TUBE L.H. / MTH 83" / 1329MM To Y-7128		1	1		
14	251007	. . TUBE L.H. / MTH 86" / 1405MM		1	1	1	
14	251008	. . TUBE L.H. / MTH 89" / 1482MM				1	
14	251097	. . TUBE L.H. REAR / 587MM To 6-8906	1				
14	251062	. . TUBE L.H. REAR / 768MM		1	1	1	
14	281345	. . SUPPORT DOOR ARM	1	1	1	1	
14	161097	. . PLATE 150MM X 170MM	1	1	1	1	
14	161098	. . REINFORCEMENT	1	1	1	1	
14	410657	. . CENTER PIN To 2-7764	1	1	1	1	
14	410973	. . CENTER PIN From 2-7765	1	1	1	1	
15	251041	. TUBE R.H. ASSY / 701MM To 6-8906	1				
15	251040	. TUBE R.H. ASSY / 882MM		1	1	1	
15	251015	. . TUBE R.H. / 701MM To 6-8906	1				
15	250970	. . TUBE R.H. / 882MM		1	1	1	
15	281345	. . SUPPORT DOOR ARM	1	1	1	1	
15	251120	. . CLOSING PLATE	1	1	1	1	
15	410657	. . CENTER PIN		1	1	1	
16	250947	. SUPPORT	3	3	3	3	
17	251032	. TUBE		1	1	1	
18	251013	. TUBE		1	1	1	
19	251043	. TUBE		1	1	1	
20	250945	. TUBE	2	2	2	2	
21	250948	. TUBE	2	2	2	2	
22	251027	. PLATE To 3-8108	2	2	2	2	
22	251215	. PLATE From 3-8109	2	2	2	2	

From Y-7046 To 8-9339		Date:07/2024	PAGE:Y2-1895-00

FRONT STRUCTURE

Item#	Part	Description	XLII 45	XLII MTH 40	XLII MTH 45	XLII MTH 45E	NOTES
23	172220	. TUBE	2	2	2	2	
24	251014	. TUBE LOWER STEP	1	1	1	1	
25	251070	. TUBE LOWER SERVICE DOOR ASSY	1	1	1	1	
25	172215	. . PROFILE	1	1	1	1	
25	251026	. . PLATE	1	1	1	1	
26	250946	. TUBE To 1-7378	1	1	1	1	
26	251192	. TUBE From 1-7379 To 2-7764	1	1	1	1	
26	251212	. TUBE From 2-7765	1	1	1	1	
27	251105	. DASH SUPPORT	1	1	1	1	
27	251107	. DASH SUPPORT / MTH 89"				1	
28	212655	. ATTACHMENT ROD / WELDED (TO FIX ANYTHING) / 373MM x 11MM DEEP	5	5	5	5	
29	251047	. REINFORCEMENT	2	2	2	2	
30	251086	. SUPPORT WIPER L.H.	1	1	1	1	
31	251087	. SUPPORT WIPER R.H.	1	1	1	1	
32	251050	. TUBE / WITH SMALL WINDSHIELD ONLY		1	1	1	
33	251051	. TUBE / WITH SMALL WINDSHIELD ONLY		1	1	1	
34	251049	. TUBE	1	1	1	1	
35	161095	. REINFORCEMENT	1	1	1	1	
36	064901	. DOOR SWITCH SUPPORT		1	1	1	
37	251065	. TUBE ASSY "S" SHAPE / BUS & MTH 83"	1	1			
37	251054	. . TUBE "S" SHAPE / BUS & MTH 83"	1	1			
37	251058	. . PLATE "S" SHAPE / BUS & MTH 83"	1	1	1	1	
37	251073	. TUBE ASSY "S" SHAPE / MTH 86" & MTH 89"		1	1	1	
37	251075	. . TUBE "S" SHAPE / MTH 86" & MTH 89"		1	1	1	
37	251076	. . PLATE "S" SHAPE / MTH 86" & MTH 89"		1	1	1	
38	**Y2-1862-60**	**ENTRANCE DOOR FRAME - INSTALLATION**					
38	251083	. HINGE SUPPORT / UPPER	1	1	1	1	
38	251001	. HINGE SUPPORT / LOWER	1	1	1	1	
39	161096	. STEERING SUPPORT	1	1	1	1	
40	251184	. TUBE WINDSHIELD ASSY	1	1	1	1	
40	251181	. . SUPPORT L.H.	1	1	1	1	
40	251182	. . SUPPORT R.H.	1	1	1	1	
40	251183	. . TUBE	1	1	1	1	
41	251185	. STOPPER SERVICE DOOR	1	1	1	1	
47	251176	. TUBE	1	1	1	1	
48	251179	. TUBE ASSY / W/CYLINDER SUPPORT To 6-8906	1				
49	251153	. TUBE CENTER ASSY To 6-8906	1				
49	251147	. TUBE CENTER ASSY / MTH 83" To Y-7128		1	1		
49	251149	. TUBE CENTER ASSY / MTH 86"		1	1	1	
49	251151	. TUBE CENTER ASSY / MTH 89"		1	1	1	
49	251031	. . TUBE To 6-8906	1				
49	251028	. . TUBE / MTH 83"		1	1		

From Y-7046 To 8-9339		Date:07/2024	PAGE:Y2-1895-00

FRONT STRUCTURE

Item#	Part	Description	XLII 45	XLII MTH40	XLII MTH45	XLII MTH45E	NOTES
49	251029	. . TUBE / MTH 86"		1	1	1	
49	251030	. . TUBE / MTH 89"		1	1	1	
49	251104	. . SUPPORT	1	1	1	1	
50	251154	. TUBE ASSY L.H. To 6-8906	1				
50	251148	. TUBE ASSY L.H. / MTH 83" To Y-7128		1	1		
50	251150	. TUBE ASSY L.H. / MTH 86"		1	1	1	
50	251152	. TUBE ASSY L.H. / MTH 89"		1	1	1	
50	251031	. . TUBE To 6-8906	1				
50	251028	. . TUBE / MTH 83" To Y-7128		1	1		
50	251029	. . TUBE / MTH 86"		1	1	1	
50	251031	. . TUBE		1	1	1	
50	251103	. . SUPPORT	2	2	2	2	
51	251033	. HINGE SUPPORT LOWER	1	1	1	1	
61	271397	. TUBE	1	1	1	1	
62	271141	. TUBE R.H.	1	1	1	1	
63	271356	. TUBE R.H. CENTER	1	1	1	1	
64	Call order desk	. ARCH ASSY	1	1	1	1	P
64	251084	. . ARCH	1	1	1	1	
64	251117	. . REINFORCEMENT	2	2	2	2	
64	251088	. . JOINT	2	2	2	2	
64	251089	. . PLATE	2	2	2	2	
64	251135	. . ROD POSITION	1	1	1	1	
65	271142	. TUBE UPPER L.H.	1	1	1	1	
66	251090	. FRONT REINFORCEMENT PLATE L.H.	1	1	1	1	
67	271394	. PLATE / (EACH SIDE)	2	2	2	2	
68	251091	. FRONT REINFORCEMENT	1	1	1	1	
69	251155	. SUPPORT UPPER WINDSHIELD	1	1	1	1	
70	251145	. SUPPORT ROLLER BLIND / CENTER To Y-7244	1	1	1	1	
70	251541	. SUPPORT ROLLER BLIND / CENTER From Y-7245	1	1	1	1	
71	271357	. TUBE L.H. CENTER	1	1	1	1	
72	271204	. TUBE L.H.	1	1	1	1	
73	271205	. TUBE UPPER WINDSHIELD	1	1	1	1	
74	271395	. TUBE L.H. CORNER	1	1	1	1	
75	271396	. TUBE	1	1	1	1	
76	271216	. TUBE CENTER	1	1	1	1	
77	271218	. TUBE UPPER R.H.	1	1	1	1	
78	251146	. SUPPORT ROLLER BLIND L.H. To Y-7244	1	1	1	1	
78	251543	. SUPPORT ROLLER BLIND L.H. From Y-7245	1	1	1	1	
79	251159	. SUPPORT ROLLER BLIND R.H. To Y-7244	1	1	1	1	
79	251542	. SUPPORT ROLLER BLIND R.H. From Y-7245	1	1	1	1	
80	251161	. SUPPORT INTERIOR R.H. To 6-8906	1				
81	251160	. SUPPORT INTERIOR L.H. To 6-8906	1				

From Y-7046 To 8-9339		Date:07/2024	PAGE:Y2-1895-00

FRONT STRUCTURE

Item#	Part	Description	XLII 45	XLII MTH40	XLII MTH45	XLII MTH45E	NOTES
82	251157	. SUPPORT MONITOR CENTER To 6-8906	1				
82	256121	. SUPPORT MONITOR CENTER / W/FLAT SCREEN 10" To 6-8906	1				
82	251223	. SUPPORT MONITOR CENTER / W/FLAT SCREEN 15" To 6-8906	1				
84	287255	. SUPPORT SPAGNOLET To 3-8108	1				
84	287423	. SUPPORT SPAGNOLET From 3-8109 To 6-8906	1				
84	287255	. SUPPORT SPAGNOLET To 4-8207		1	1	1	
84	287423	. SUPPORT SPAGNOLET From 4-8208		1	1	1	
85	287255	. SUPPORT SPAGNOLET To 3-8108	1				A
85	287423	. SUPPORT SPAGNOLET From 3-8109 To 6-8906	1				A
85	287255	. SUPPORT SPAGNOLET To 4-8207		1	1	1	A
85	287423	. SUPPORT SPAGNOLET From 4-8208		1	1	1	A
90	251119	. CLOSING PLATE 68MM X 68MM	2	2	2	2	
91	474103	. ANGLE / MOULDING SUPPORT	2	2	2	2	
92	172360	. PANEL HINGE BOX / SS	1	1	1	1	
93	172359	. PANEL FRONT CONER / SS	1	1	1	1	
94	214107	. PANEL FRONT CONER / SS	1	1	1	1	
95	251102	. SUPPORT / DASH	1	1	1	1	
96	287961	. SUPPORT	1	1	1	1	
102	214243	. TUBE / TUBE 26 AND DR 92MM x 1 1/2" x 3" To 6-8906	1				
103	251079	. PANEL FRONT / TUBE 26 & 11	1				
		A) RH SIDE ONLY					
		P) CALL ORDER DESK FOR SPECIFIC APPLICATION (V.I.N.)					

From Y-7046 To 6-8906		Date:07/2024	PAGE:Y2-1895-10
FRONT LOWER FLOOR STRUCTURE - BUS			

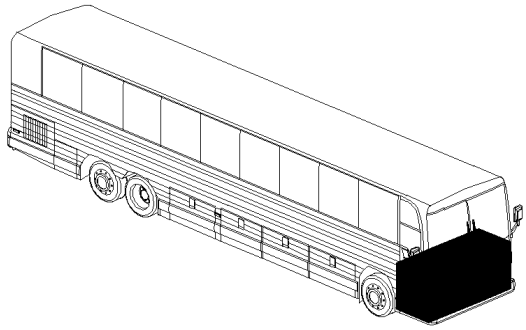

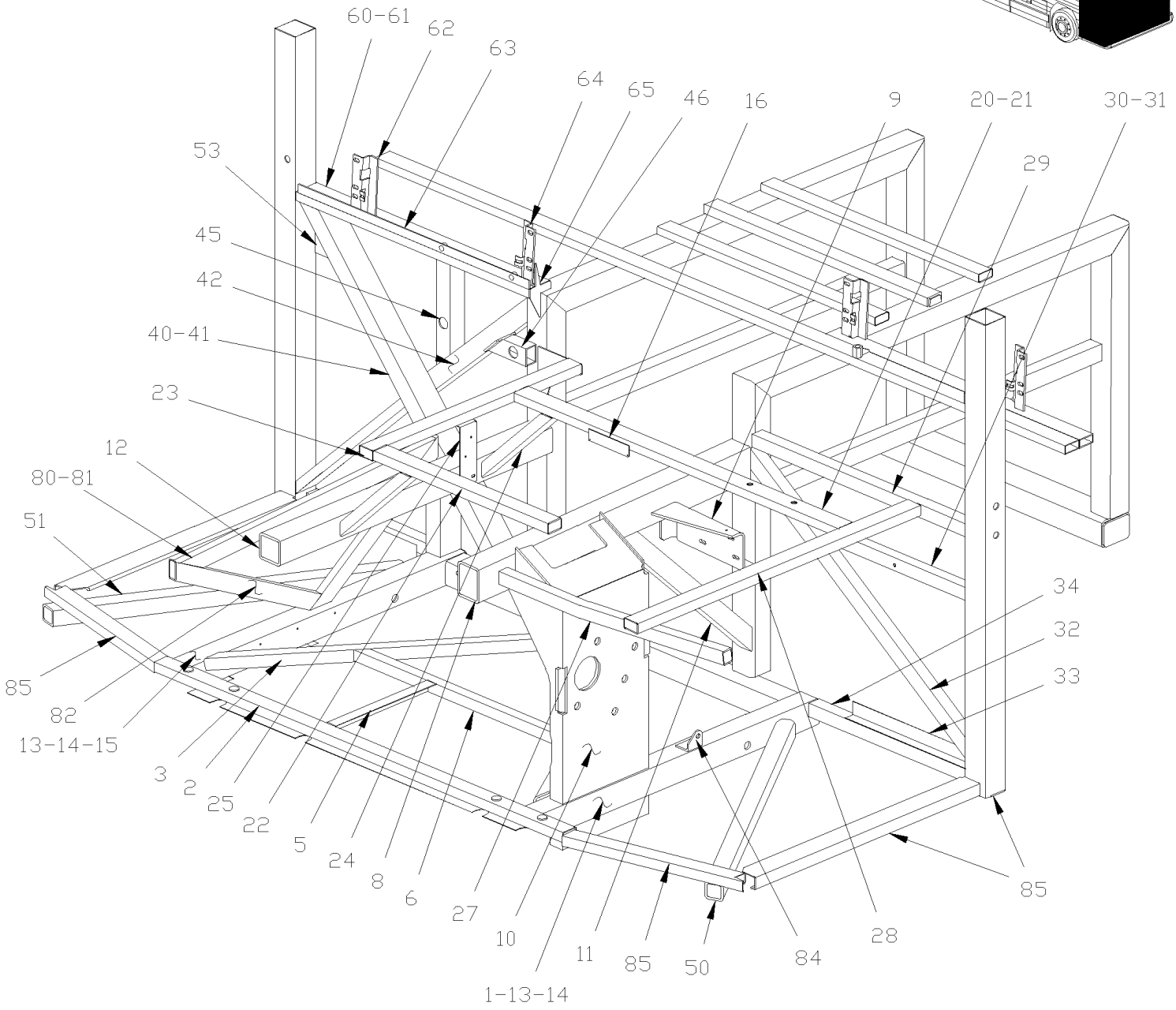

From Y-7046 To 6-8906		Date:07/2024	PAGE:Y2-1895-10
FRONT LOWER FLOOR STRUCTURE - BUS			

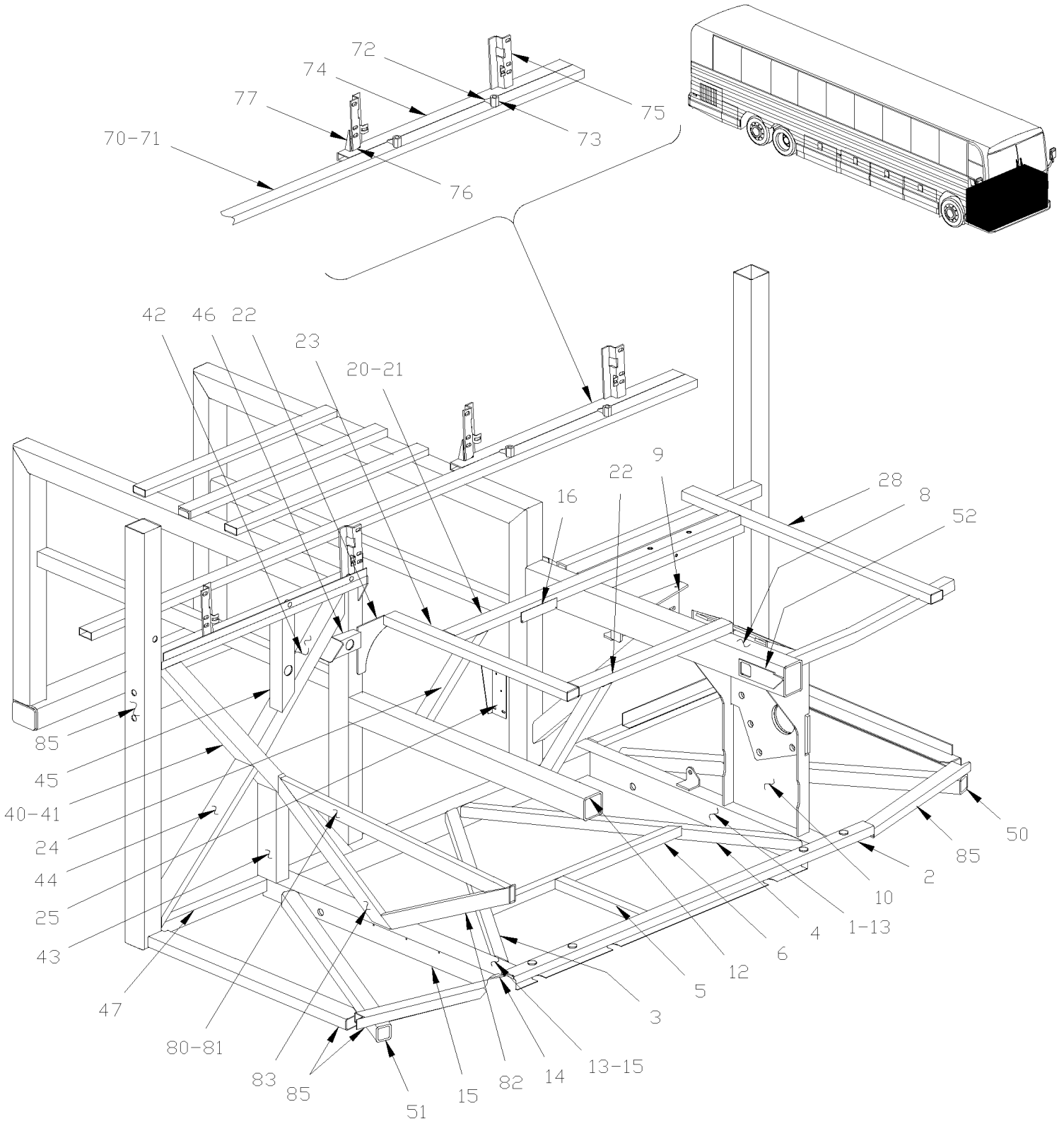

From Y-7046 To 6-8906		Date:07/2024	PAGE:Y2-1895-10

FRONT LOWER FLOOR STRUCTURE - BUS

Item#	Part	Description	XLII 45	XLII MTH40	XLII MTH45	XLII MTH45E	NOTES
1	172203	TUBE	1				
2	287937	TUBE / HINGE ASSY To 2-7763	1				
2	287317	TUBE / HINGE ASSY From 2-7764	1				
3	172255	TUBE	1				
4	172258	TUBE	1				
5	172227	ANGLE	1				
6	172257	TUBE	1				
8	172273	TUBE 1022MM	1				
9	172281	SUPPORT BRAKE VALVE	1				
10	172440	SUPPORT GEAR BOX STEERING / W/ "ZF" To 4-8250	1				
10	172856	SUPPORT GEAR BOX STEERING / W/ "ZF" From 4-8251 To 6-8832	1				
10	173095	SUPPORT GEAR BOX STEERING / W/ "ZF" From 6-8833	1				
11	214238	TUBE 691MM	1				
12	213855	TUBE 981MM To 2-7763	1				
12	214598	TUBE 981MM From 2-7764	1				
13	220944	CLOSING PLATE 67MM X 67MM	2				
14	172204	CLOSING PLATE 115MM X 68MM	2				
15	172525	TUBE	1				
16	172560	SUPPORT / PARKING BRAKE OVERRULE	1				
20	Call order desk	FLOOR ASSY / STEPWELL & DRIVER`S	1				P
21	214140	. TUBE / BACKWARD	1				
22	214239	. TUBE / FORWARD	1				
23	214240	. TUBE / CURBSIDE	1				
24	214141	. TUBE	2				
25	453315	. SUPPORT / A/C VALVE	1				
26	214241	. PLATE SUPPORT	1				
27	213962	TUBE FRONT DRIVER`S FLOOR SUPPORT	1				
28	214138	TUBE STREETSIDE DRIVER`S FLOOR SUPPORT	1				
29	214266	TUBE DRIVER`S FLOOR REAR / W/IND SUSPENTION	1				
29	214139	TUBE DRIVER'S FLOOR REAR / W/RIGID SUSPENTION	1				
30	214300	"Z" FRAME ASSY To 2-7881	1				
30	214772	"Z" FRAME ASSY From 2-7882	1				
31	214317	. TUBE ASSY UPPER	1				
32	214309	. TUBE TRANSVERSALE / STREET SIDE / 1032MM	1				
NS	5001354	. STUD WD WOC M6-1.0X20 SS From 2-7882	1				
33	214318	. ANGLE 450MM To 2-7881	1				
33	214773	. ANGLE 450MM From 2-7882	1				
34	172267	TUBE 584MM	1				
40	Call order desk	"X" FRAME ASSY	1				P
41	214217	. TUBE 1152MM	1				

From Y-7046 To 6-8906		Date:07/2024	PAGE:Y2-1895-10

FRONT LOWER FLOOR STRUCTURE - BUS

Item#	Part	Description	XLII 45	XLII MTH40	XLII MTH45	XLII MTH45E	NOTES
42	214216	. TUBE 549MM	1				
43	214219	. TUBE 303MM	1				
44	214218	. TUBE 551MM	1				
45	214433	TUBE / HOTESS SEAT CURBSIDE To 2-7881	1				
45	214715	TUBE / HOTESS SEAT CURBSIDE From 2-7882	1				
46	214451	TUBE / HOTESS SEAT STREETSIDE	1				
47	172214	TUBE 569MM	1				
50	172268	TUBE / STREET SIDE / 964MM	1				
51	172213	TUBE / CURBSIDE / 931MM	1				
52	251048	REINFORCEMENT	2				
53	214456	REINFORCEMENT To 2-7881	1				
53	214712	REINFORCEMENT From 2-7882	1				
60	214413	SUPPORT ASSY / MODESTY PANEL / CURBSIDE	1				
61	214136	. TUBE 842MM	1				
62	327276	. ATTACHMENT ASSY / MODESTY PANEL / CURBSIDE	1				
63	214411	. ANCHOR ASSY / HOSTESS SEAT	1				
64	327357	. ATTACHMENT ASSY / MODESTY PANEL / STREETSIDE	1				
65	214436	. REINFORCEMENT	1				
70	172504	SUPPORT ASSY / MODESTY PANEL / STREETSIDE	1				
71	170464	. SUPPORT, FLOOR	1				
72	214390	. REINFORCEMENT	2				
73	214389	. ANCHOR DRIVER SEAT	2				
74	172505	. TUBE	1				
75	327277	. ATTACHMENT	1				
76	327356	. ATTACHMENT ASS	1				
77	214437	. RENFORCMENT	1				
80	Call order desk	REINFORCEMENT ASSY / TRIANGULAR SHAPE	1				P
81	214135	. TUBE / UPPER	1				
82	214133	. TUBE / BACKWARD	1				
83	214134	. TUBE / FORWARD	1				
84	285155	ANGLE SUPPORT BUMPER SPRING	1				
85	**Y2-1895-00**	**FRONT STRUCTURE**					
86		SUPPORT ASSY / MODESTY PANEL / STREETSIDE	1	1	1	1	
		P) CALL ORDER DESK FOR SPECIFIC APPLICATION (V.I.N.)					

From Y-7046 To 6-8906		Date:07/2024	PAGE:Y2-1895-50
FRONT LOWER FLOOR STRUCTURE - MTH			

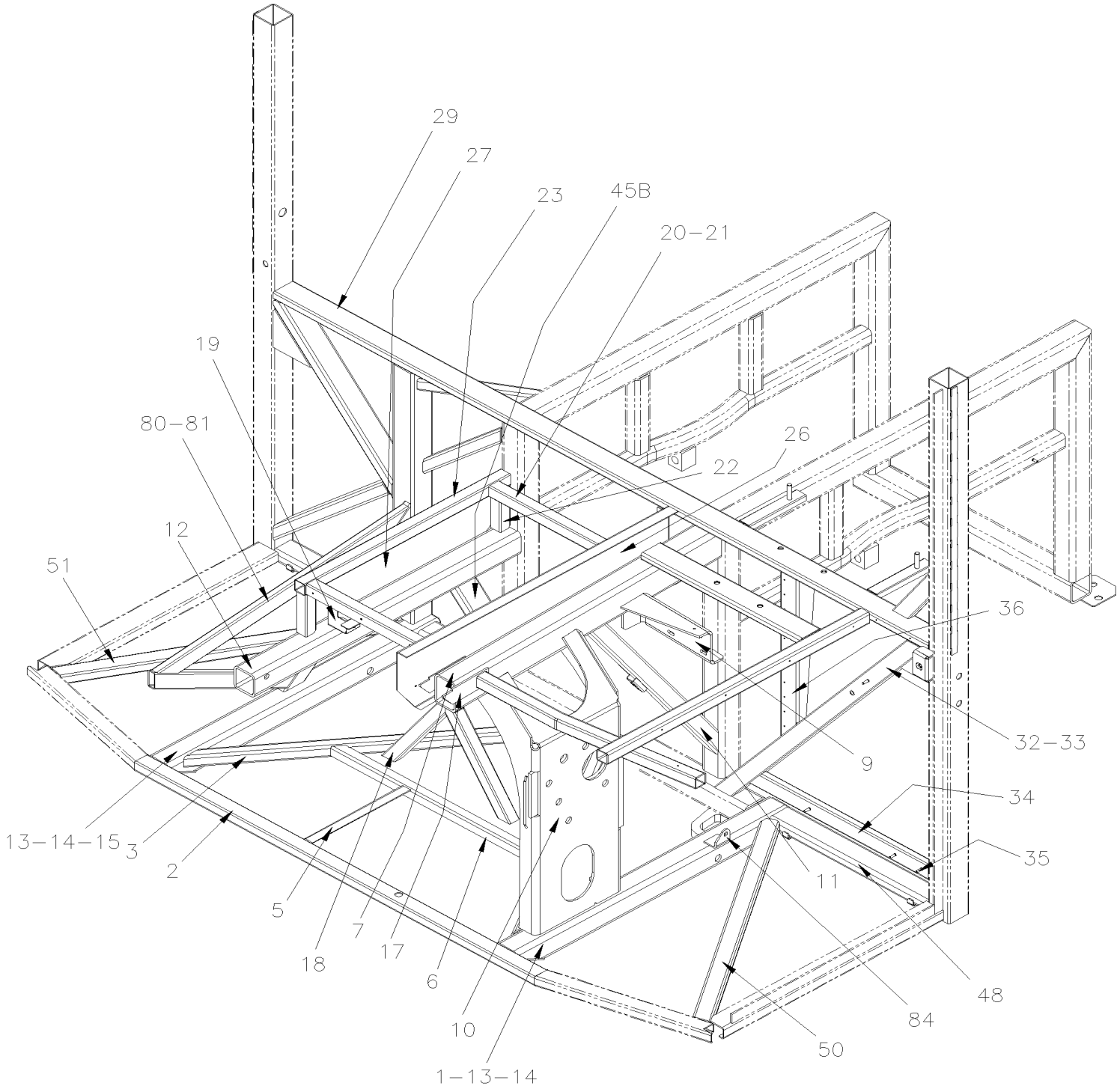

From Y-7046 To 6-8906		Date:07/2024	PAGE:Y2-1895-50
FRONT LOWER FLOOR STRUCTURE - MTH			

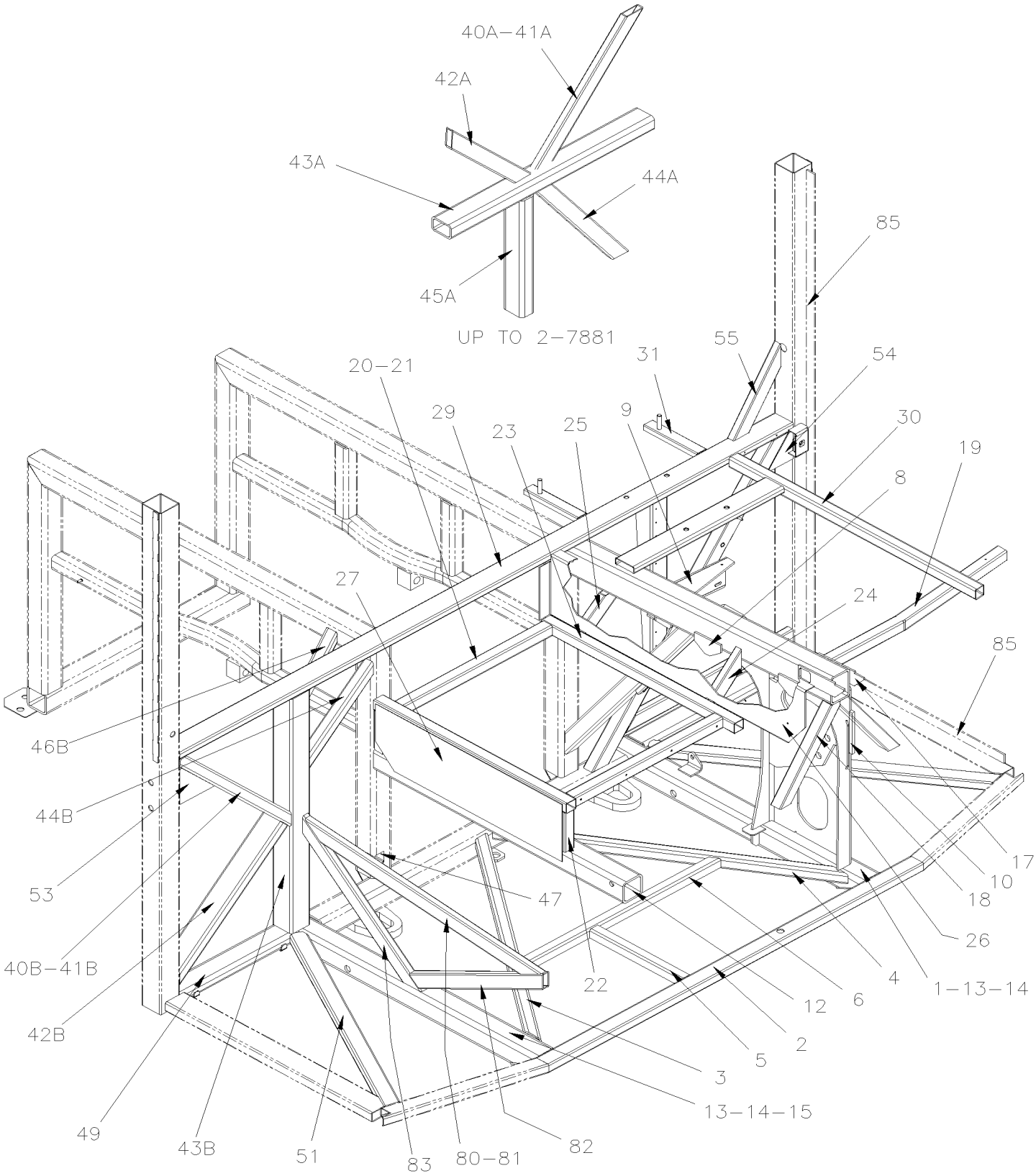

From Y-7046 To 6-8906		Date:07/2024	PAGE:Y2-1895-50

FRONT LOWER FLOOR STRUCTURE - MTH

Item#	Part	Description	XLII 45	XLII MTH40	XLII MTH45	XLII MTH45E	NOTES
1	172824	BRACE, GEAR BOX SUPPORT To 4-8193		1	1	1	
1	172862	BRACE, GEAR BOX SUPPORT From 4-8194 To 6-8832					
1	173140	BRACE, GEAR BOX SUPPORT From 6-8833		1	1	1	
2	286095	TUBE / HINGE ASSY To 1-7378		1	1	1	
2	287937	TUBE / HINGE ASSY From 1-7379 To 2-7764		1	1	1	
2	287317	TUBE / HINGE ASSY From 2-7765		1	1	1	
3	172255	TUBE		1	1	1	
4	172258	TUBE		1	1	1	
5	172227	ANGLE		1	1	1	
6	172257	TUBE		1	1	1	
7	172273	TUBE 1022MM		1	1	1	
8	172796	REINFORCMENT "TRIANGULAR SHAPE 100MM x60MM From 4-8165		2	2	2	
9	172281	SUPPORT BRAKE VALVE		1	1	1	
10	172312	SUPPORT GEAR BOX STEERING / W/ "ZF" To 4-8193		1	1	1	
10	172799	SUPPORT GEAR BOX STEERING / W/ "ZF" From 4-8194 To 4-8237		1	1	1	
10	172858	SUPPORT GEAR BOX STEERING / W/ "ZF" From 4-8238 To 6-8832		1	1	1	
10	173092	SUPPORT GEAR BOX STEERING / W/ "ZF" From 6-8833		1	1	1	
11	213856	TUBE 837MM		1	1	1	
12	213855	TUBE 981MM To 2-7764		1	1	1	
12	214598	TUBE 981MM From 2-7765		1	1	1	
13	220944	CLOSING PLATE 67MM X 67MM		2	2	2	
14	172204	CLOSING PLATE 115MM X 68MM		2	2	2	
15	172203	TUBE		1	1	1	
17	251048	REINFORCEMENT		2	2	2	
18	213847	TUBE		2	2	2	
19	373567	SUPPORT / WATER PUMP To 4-8298		1	1	1	
19	172870	SUPPORT / WATER PUMP From 4-8299		1	1	1	
20	172304P	FLOOR ASSY		1	1	1	
21	172285	. TUBE 584MM		2	2	2	
22	172288	. TUBE 144MM		2	2	2	
23	172289	. TUBE / CURBSIDE 758MM		2	2	2	
24	172299	TUBE / FORWARD / BETWEN FLOOR & TUBE #8		1	1	1	
25	172300	TUBE / BACWARD / BETWEN FLOOR & TUBE #8		1	1	1	
26	213934	SUPPORT FLOOR		1	1	1	
27	172351	PANEL		1	1	1	
28	213962	TUBE FRONT DRIVER`S FLOOR SUPPORT		1	1	1	
29	213929	TUBE ASSY		1	1	1	
30	218169	DRIVER'S FLOOR ASSY		1	1	1	
31	214284	ATTACHMENT SAFETY BELT		2	2	2	
32	214301	"Z" FRAME ASSY		1	1	1	
33	213964	. TUBE TRANSVERSALE / STREET SIDE / 1154MM		1	1	1	
34	213965	. TUBE		1	1	1	

From Y-7046 To 6-8906		Date:07/2024	PAGE:Y2-1895-50

FRONT LOWER FLOOR STRUCTURE - MTH

Item#	Part	Description	XLII 45	XLII MTH40	XLII MTH45	XLII MTH45E	NOTES
35	5001354	. STUD WD WOC M6-1.0X20 SS		4	4	4	
36	214383	REINFORCEMENT / DRIVER'S SEAT		1	1	1	
40	Call order desk	"X" FRAME ASSY		1	1	1	P
40A	Call order desk	"X" FRAME ASSY To 2-7881		1	1	1	P
40B	214718P	"X" FRAME ASSY From 2-7882		1	1	1	
41A	213849	. TUBE 567MM To 2-7881		1	1	1	
41B	214709	. TUBE 633MM From 2-7882		1	1	1	
42A	213850	. TUBE 502MM To 2-7881		1	1	1	
42B	214710	. TUBE 567MM From 2-7882		1	1	1	
43A	213851	. TUBE 799MM To 2-7881		1	1	1	
43B	214711	. TUBE 857MM From 2-7882		1	1	1	
44A	213852	. TUBE 575MM To 2-7881		1	1	1	
44B	214713	. TUBE 410MM From 2-7882		1	1	1	
45A	213925	. TUBE 426MM To 2-7881		1	1	1	
45B	214714	. TUBE 440MM From 2-7882		1	1	1	
46B	214716	. TUBE 350MM From 2-7882		1	1	1	
47	214717	SUPPORT From 2-7882		1	1	1	
48	172267	TUBE 584MM		1	1	1	
49	172214	TUBE 569MM		1	1	1	
50	172268	TUBE / STREET SIDE / 964MM		1	1	1	
51	172213	TUBE / CURBSIDE / 931MM		1	1	1	
53	214456	REINFORCEMENT To 2-7881		1	1	1	
53	214712	REINFORCEMENT From 2-7882		1	1	1	
54	214113	REINFORCEMENT / TRIANGULAR SHAPE		1	1	1	
55	251080	TUBE		1	1	1	
80	Call order desk	REINFORCEMENT ASSY / TRIANGULAR SHAPE		1	1	1	P
80	Call order desk	REINFORCEMENT ASSY / TRIANGULAR SHAPE		1	1	1	P
81	214056	. TUBE / UPPER		1	1	1	
82	214057	. TUBE / BACKWARD		1	1	1	
83	213854	. TUBE / FORWARD		1	1	1	
84	285155	ANGLE SUPPORT BUMPER SPRING		1	1	1	
85	**Y2-1895-00**	**FRONT STRUCTURE**					
		P) CALL ORDER DESK FOR SPECIFIC APPLICATION (V.I.N.)					

From Y-7046 To 6-8906		Date:07/2024	PAGE:Y2-1896-00
FRONT SHEATING - BUS			

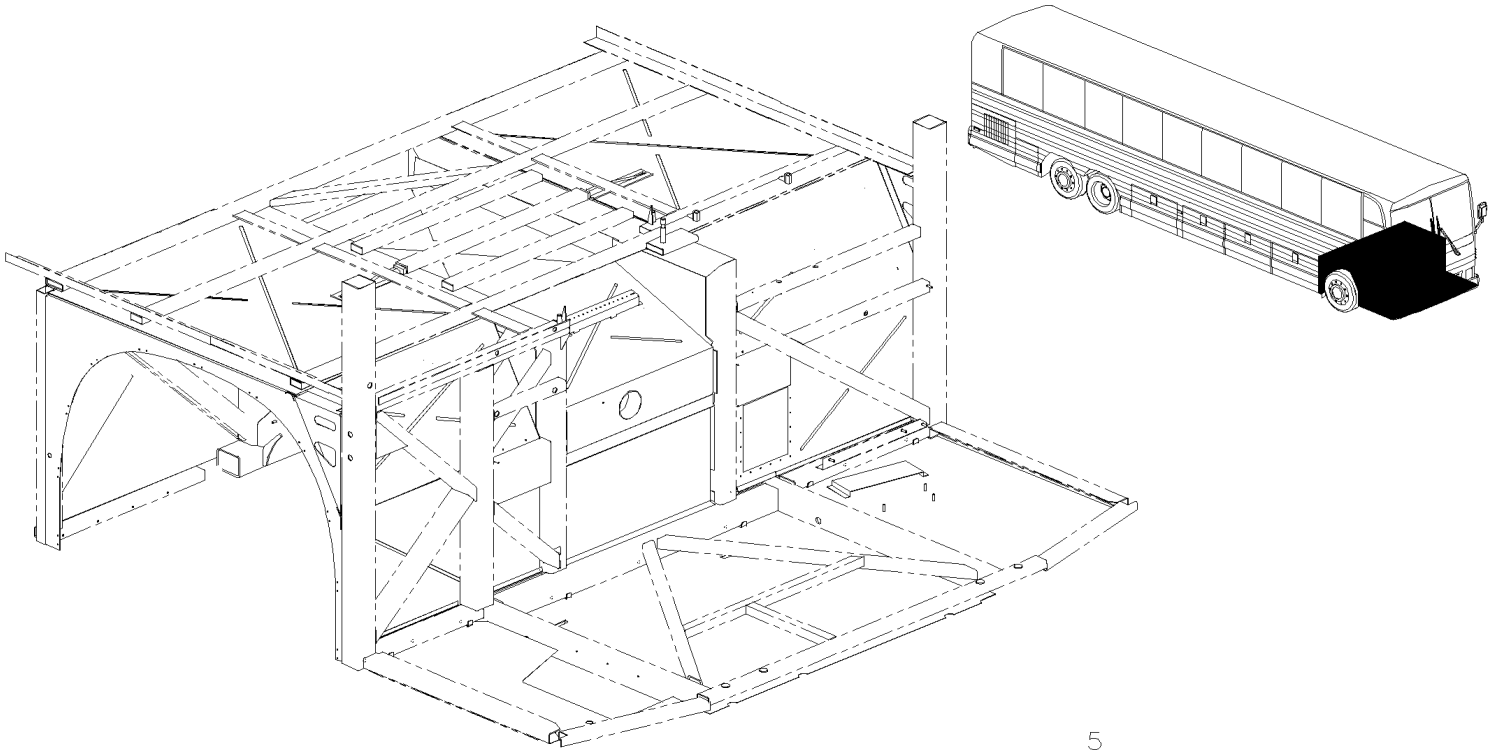

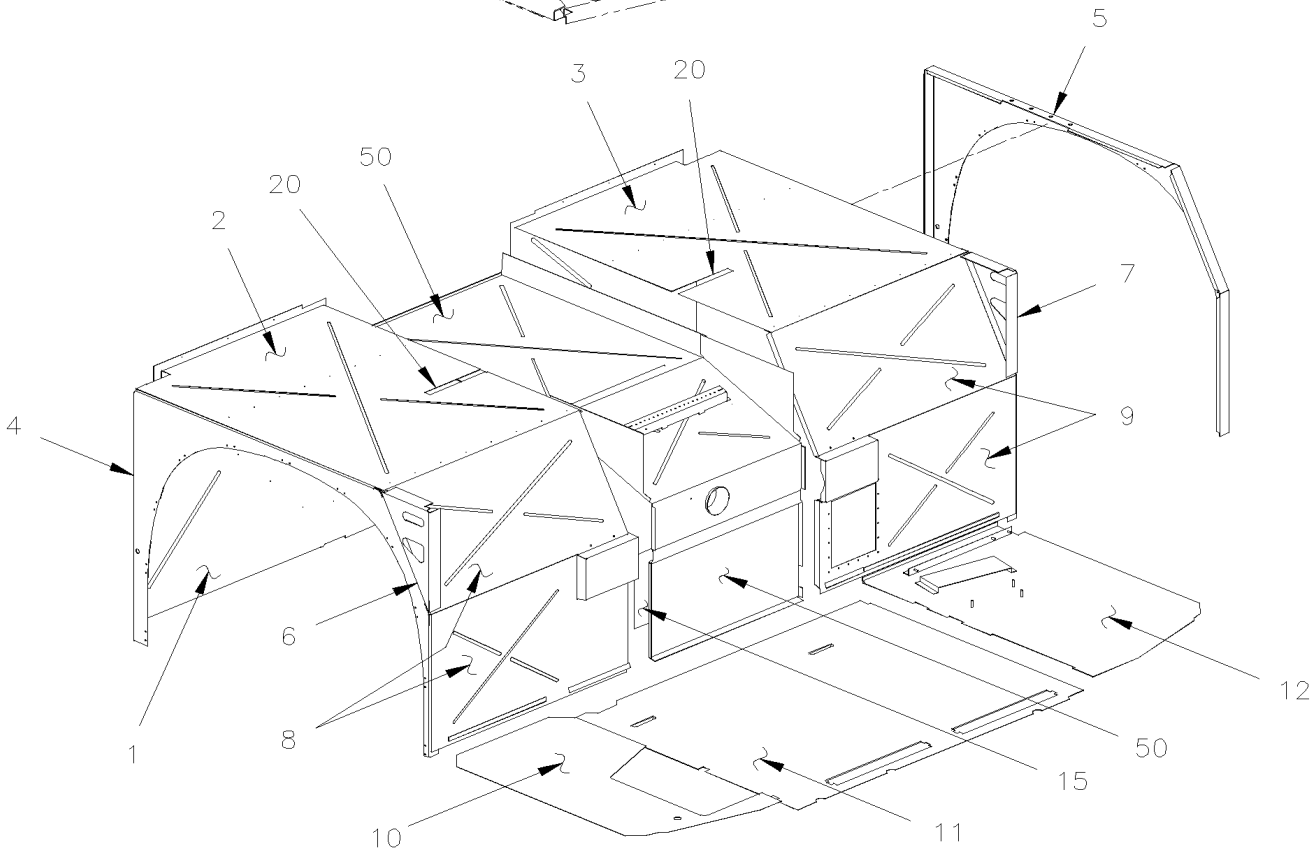

From Y-7046 To 6-8906		Date:07/2024	PAGE:Y2-1896-00

FRONT SHEATING - BUS

Item#	Part	Description	XLII 45	XLII MTH40	XLII MTH45	XLII MTH45E	NOTES
1	214271	PANEL BACKWARD W/TOP FRONT FENDER / CURBSIDE To 2-7805	1				R
1	214289	PANEL BACKWARD W/TOP FRONT FENDER / STREETSIDE To 2-7805	1				R
NS	214224	PANEL BACKWARD CENTER To 2-7805	1				R
1	214324	PANEL BACKWARD W/TOP FRONT FENDER / CURBSIDE To 2-7805	1				I
1	214323	PANEL BACKWARD W/TOP FRONT FENDER / STREETSIDE To 2-7805	1				I
1	212775	PANEL BACKWARD CENTER To 2-7805	1				I
1	214670	PANEL BACKWARD FRONT FENDER / ONE PIECE From 2-7806	1				I R
2	214676	PANEL FENDER TOP / CURBSIDE To 2-7805	1				R
2	214702	PANEL FENDER TOP / CURBSIDE From 2-7806 To 4-8244	1				I
2	215335	PANEL FENDER TOP / CURBSIDE From 2-8245	1				I
3	214675	PANEL FENDER TOP / STREETSIDE From 2-7806	1				R
3	214701	PANEL FENDER TOP / STREETSIDE From 2-7806 To 4-8244	1				I
3	215334	PANEL FENDER TOP / STREETSIDE From 4-8245	1				I
4	214328	PANEL SIDE FENDER / CURBSIDE To 4-8193	1				
4	213700	PANEL SIDE FENDER / CURBSIDE From 4-8194	1				
5	214327	PANEL SIDE FENDER / STREETSIDE To 1-7507	1				
5	214211	PANEL SIDE FENDER / STREETSIDE From 1-7508 To 4-8193	1				
5	213698	PANEL SIDE FENDER / STREETSIDE From 4-8194	1				
6	214393	CLOSING PLATE TRIANGULAR SHAPE / CURBSIDE To Y-7102	1				
6	214410	CLOSING PLATE TRIANGULAR SHAPE / CURBSIDE From Y-7103	1				
7	214392	CLOSING PLATE TRIANGULAR SHAPE / STREETSIDE To Y-7102	1				
7	214409	CLOSING PLATE TRIANGULAR SHAPE / STREETSIDE From Y-7103	1				
8	214303	PANEL FORWARD FRONT FENDER / CURBSIDE	1				R
8	214326	PANEL FORWARD FRONT FENDER / CURBSIDE To 2-7768	1				I
8	213651	PANEL FORWARD FRONT FENDER / CURBSIDE From 2-7769	1				I
9	214302	PANEL FORWARD FRONT FENDER / STREETSIDE	1				R
9	214325	PANEL FORWARD FRONT FENDER / STREETSIDE To 2-7768	1				I
9	213631	PANEL FORWARD FRONT FENDER / STREETSIDE From 2-7769 To 4-8193	1				I
9	213944	PANEL FORWARD FRONT FENDER / STREETSIDE From 4-8194	1				I
10	214244	FLOOR PANEL UNDER STEPWELL / CURBSIDE To 2-7881	1				
10	214730	FLOOR PANEL UNDER STEPWELL / CURBSIDE From 2-7882	1				
11	172496	FLOOR PANEL CENTER PART W/SPARE TIRE To 2-7763	1				
11	172653	FLOOR PANEL CENTER PART W/SPARE TIRE From 2-7764 To 2-7881	1				
11	172683	FLOOR PANEL CENTER PART W/SPARE TIRE From 2-7882 To 6-8832	1				
11	173099	FLOOR PANEL CENTER PART W/SPARE TIRE From 6-8833	1				
12	172324	FLOOR PANEL STEERING COMPARTMENT / STREETSIDE To 2-7881	1				
12	214729	FLOOR PANEL STEERING COMPARTMENT / STREETSIDE From 2-7882 To 3-8108	1				
12	215090	FLOOR PANEL STEERING COMPARTMENT / STREETSIDE From 3-8109	1				
20	214511	CLOSING PLATE "U" FORM / 270MM To 4-8244	2				I
20	215333	CLOSING PLATE "U" FORM / 154MM From 4-8245	2				I
50	**Y2-1897-00**	**FRONT SUB-FRAME / W/I BEAM RIGID SUSPENSION**					
50	**Y2-1897-50**	**FRONT SUB-FRAME / W/INDEPENDENT SUSPENSION - 16500 LBS**					

From Y-7046 To 6-8906		Date:07/2024	PAGE:Y2-1896-00

FRONT SHEATING - BUS

Item#	Part	Description	XLII 45	XLII MTH40	XLII MTH45	XLII MTH45E	NOTES
50	Y2-1897-51	**FRONT SUB-FRAME / W/INDEPENDENT SUSPENSION - 18000 LBS**					
		I) WITH INDEPENDANT SUSPENSION					
		R) WITH I BEAM RIGID SUSPENSION					

From Y-7046 To 8-9339		Date:07/2024	PAGE:Y2-1896-50
FRONT SHEATING - MTH			

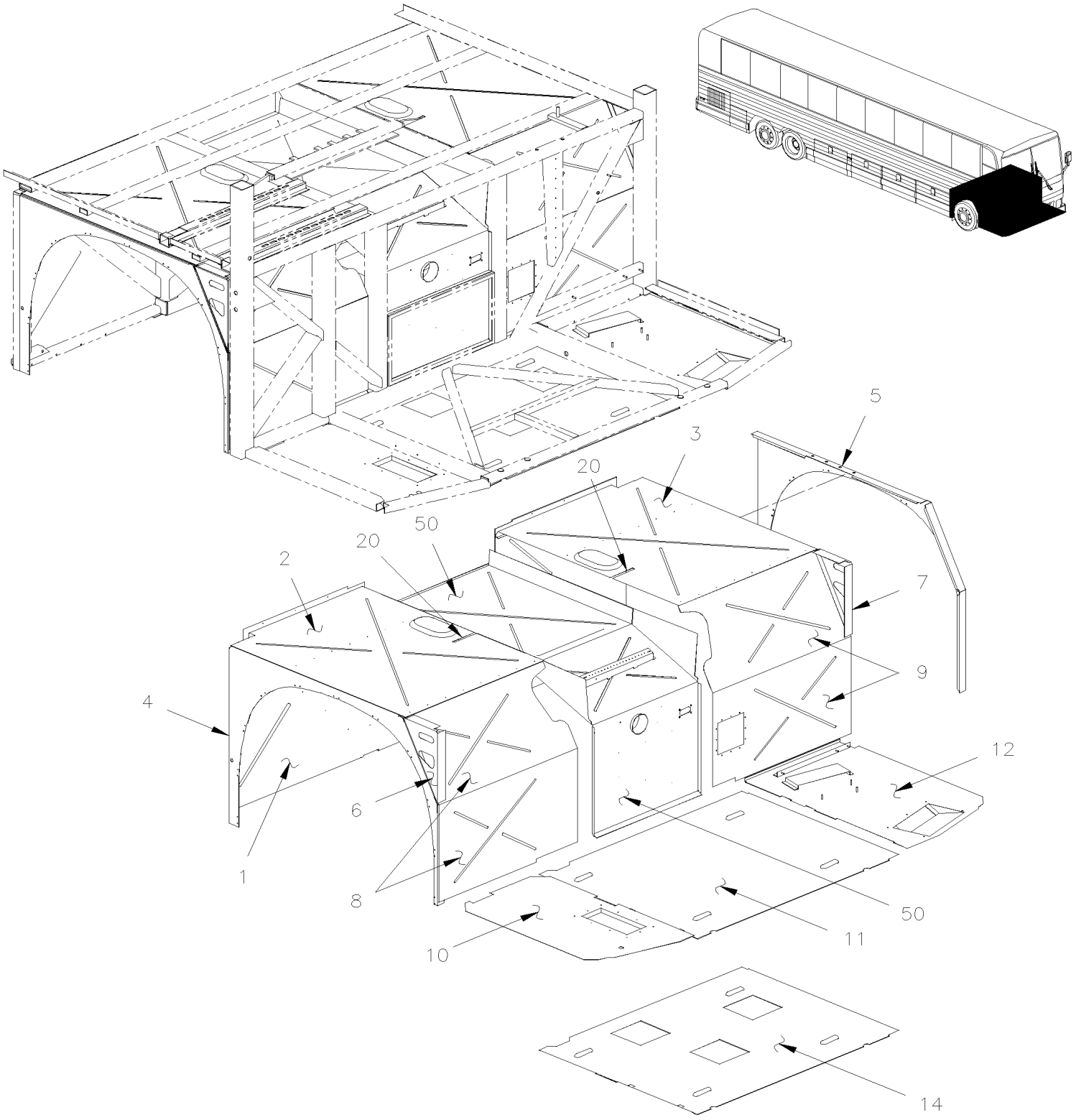

From Y-7046 To 8-9339		Date:07/2024	PAGE:Y2-1896-50

FRONT SHEATING - MTH

Item#	Part	Description	XLII 45	XLII MTH40	XLII MTH45	XLII MTH45E	NOTES
1	214324	PANEL BACKWARD W/TOP FRONT FENDER / CURBSIDE To 2-7805		1	1	1	
1	214323	PANEL BACKWARD W/TOP FRONT FENDER / STREETSIDE To 2-7805		1	1	1	
NS	212775	PANEL BACKWARD CENTER To 2-7805		1	1	1	
1	214670	PANEL BACKWARD FRONT FENDER / ONE PIECE From 2-7806		1	1	1	
2	214702	PANEL FENDER TOP / CURBSIDE From 2-7806 To 4-8244		1	1	1	
2	215335	PANEL FENDER TOP / CURBSIDE From 4-8245 To 7-8949		1	1	1	
2	216010	PANEL FENDER TOP / CURBSIDE From 7-8950		1	1	1	
3	214701	PANEL FENDER TOP / STREETSIDE From 2-7806 To 4-8244		1	1	1	
3	215334	PANEL FENDER TOP / STREETSIDE From 4-8245 To 7-8949		1	1	1	
3	216006	PANEL FENDER TOP / STREETSIDE From 7-8950		1	1	1	
3	214210	PANEL FENDER STOP / STREETSIDE / W/SLIDE-OUT From 1-7508 To 2-7805			1		S
3	214667	PANEL FENDER STOP / STREETSIDE / W/SLIDE-OUT From 2-7806 To 4-8244			1		S
3	215336	PANEL FENDER STOP / STREETSIDE / W/SLIDE-OUT From 4-8245			1		S
4	214328	PANEL SIDE FENDER / CURBSIDE To 2-7805		1	1	1	
4	213700	PANEL SIDE FENDER / CURBSIDE From 2-7806		1	1	1	
5	214327	PANEL SIDE FENDER / STREETSIDE To 1-7507		1	1	1	
5	214211	PANEL SIDE FENDER / STREETSIDE From 1-7508 To 4-8193		1	1	1	
5	213698	PANEL SIDE FENDER / STREETSIDE From 4-8194		1	1	1	
5	214666	PANEL SIDE FENDER / STREETSIDE To 2-7805			1		S
5	213699	PANEL SIDE FENDER / STREETSIDE From 2-7806			1		
6	214393	CLOSING PLATE TRIANGULAR SHAPE / CURBSIDE To Y-7102		1	1	1	
6	214410	CLOSING PLATE TRIANGULAR SHAPE / CURBSIDE From Y-7103		1	1	1	
7	214392	CLOSING PLATE TRIANGULAR SHAPE / STREETSIDE To Y-7102		1	1	1	
7	214409	CLOSING PLATE TRIANGULAR SHAPE / STREETSIDE From Y-7103		1	1	1	
8	214326	PANEL FORWARD FRONT FENDER / CURBSIDE To 2-7768		1	1	1	
8	213651	PANEL FORWARD FRONT FENDER / CURBSIDE From 2-7769 To 7-8949		1	1	1	
8	216008	PANEL FORWARD FRONT FENDER / CURBSIDE From 7-8950		1	1	1	
9	214325	PANEL FORWARD FRONT FENDER / STREETSIDE To 2-7768		1	1	1	
9	213631	PANEL FORWARD FRONT FENDER / STREETSIDE From 2-7769 To 4-8193		1	1	1	
9	213944	PANEL FORWARD FRONT FENDER / STREETSIDE From 4-8194 To 7-8949		1	1	1	
9	216007	PANEL FORWARD FRONT FENDER / STREETSIDE From 7-8950		1	1	1	
10	172228	FLOOR PANEL UNDER STEPWELL / CURBSIDE To 2-7881		1	1	1	
10	214731	FLOOR PANEL UNDER STEPWELL / CURBSIDE From 2-7882		1	1	1	
11	172222	FLOOR PANEL CENTER PART STD W/MTH To 2-7763		1	1	1	
11	172634	FLOOR PANEL CENTER PART STD W/MTH From 2-7764 To 2-7881		1	1	1	
11	172684	FLOOR PANEL CENTER PART STD W/MTH From 2-7882 To 4-8193		1	1	1	
11	172826	FLOOR PANEL CENTER PART STD W/MTH From 4-8194 To 6-8832		1	1	1	
11	173098	FLOOR PANEL CENTER PART STD W/MTH W/O SPARE TIRE From 6-8833		1	1	1	
11	173011	FLOOR PANEL CENTER PART WITHOUT HOLE From 4-8194		1	1	1	O
12	172324	FLOOR PANEL STEERING COMPARTMENT / STREETSIDE		1	1	1	
12	219915	FLOOR PANEL STEERING COMPARTMENT / STREETSIDE		1	1	1	
14	214089	FLOOR PANEL CENTER PART "OPTION MARATHON" To 2-7763		1	1	1	M

From Y-7046 To 8-9339		Date:07/2024	PAGE:Y2-1896-50

FRONT SHEATING - MTH

Item#	Part	Description	XLII 45	XLII MTH40	XLII MTH45	XLII MTH45E	NOTES
14	214672	FLOOR PANEL CENTER PART "OPTION MARATHON" From 2-7764 To 2-7881		1	1	1	M
14	172685	FLOOR PANEL CENTER PART "OPTION MARATHON" From 2-7882 To 3-8164		1	1	1	M
14	172825	FLOOR PANEL CENTER PART "OPTION MARATHON" From 4-8165 To 6-8832		1	1	1	M
14	173100	FLOOR PANEL CENTER PART "OPTION MARATHON" From 6-8833		1	1	1	M
20	214511	CLOSING PLATE "U" FORM / 270MM To 4-8244		2	2	2	
20	215333	CLOSING PLATE "U" FORM / 154MM From 4-8245		2	2	2	
50	**Y2-1897-50**	**FRONT SUB-FRAME / W/INDEPENDENT SUSPENSION - 16500 LBS**					
50	**Y2-1897-51**	**FRONT SUB-FRAME / W/INDEPENDENT SUSPENSION - 18000 LBS**					
		M) WITH "MARATHON" CONVERTER'S					
		O) WITHOUT PERFORATION					
		S) WITH "SLIDEOUT"					

From Y-7046 To 6-8906		Date:07/2024	PAGE:Y2-1897-00
FRONT SUB-FRAME / W/I BEAM RIGID SUSPENSION			

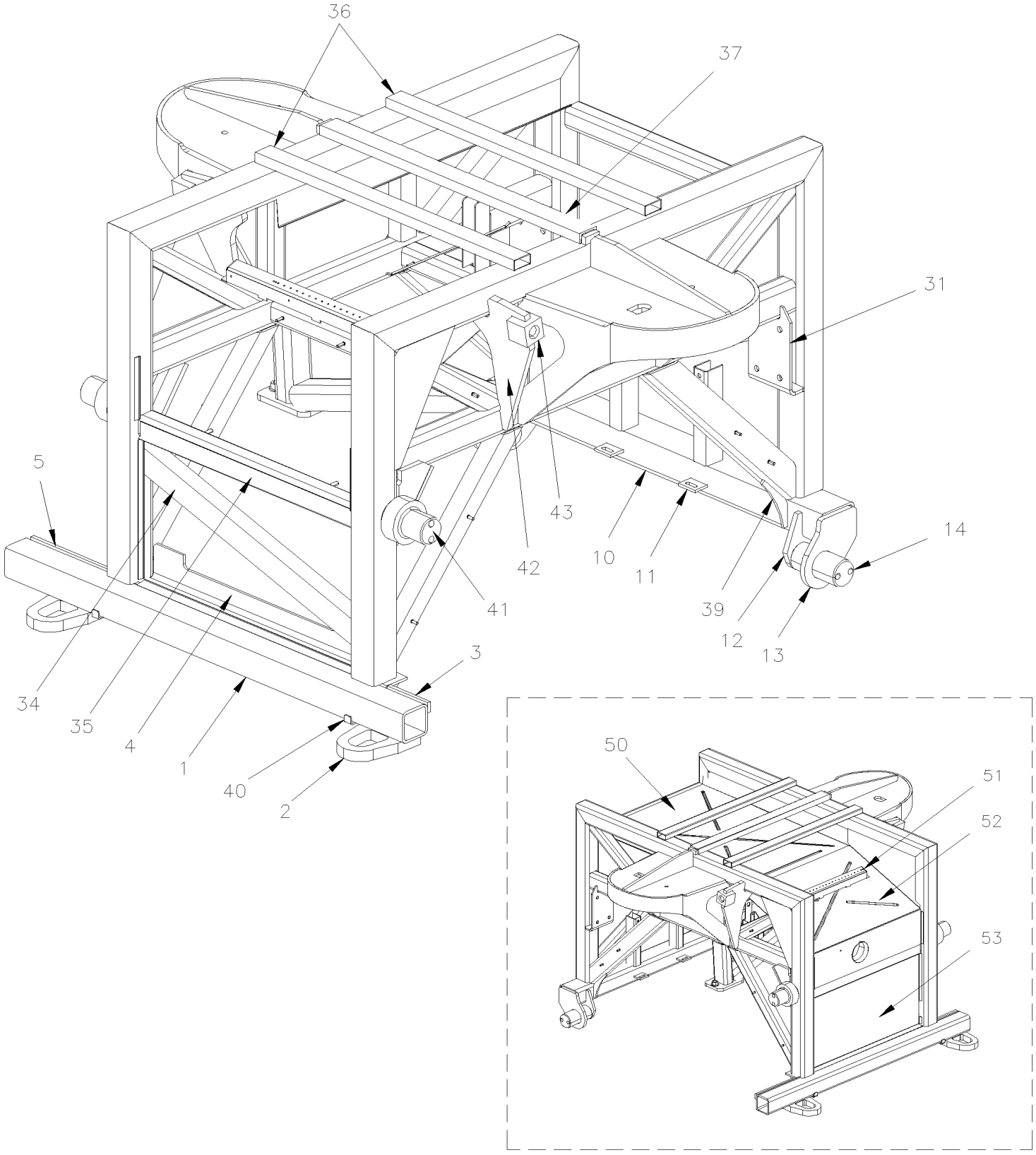

From Y-7046 To 6-8906		Date:07/2024	PAGE:Y2-1897-00
FRONT SUB-FRAME / W/I BEAM RIGID SUSPENSION			

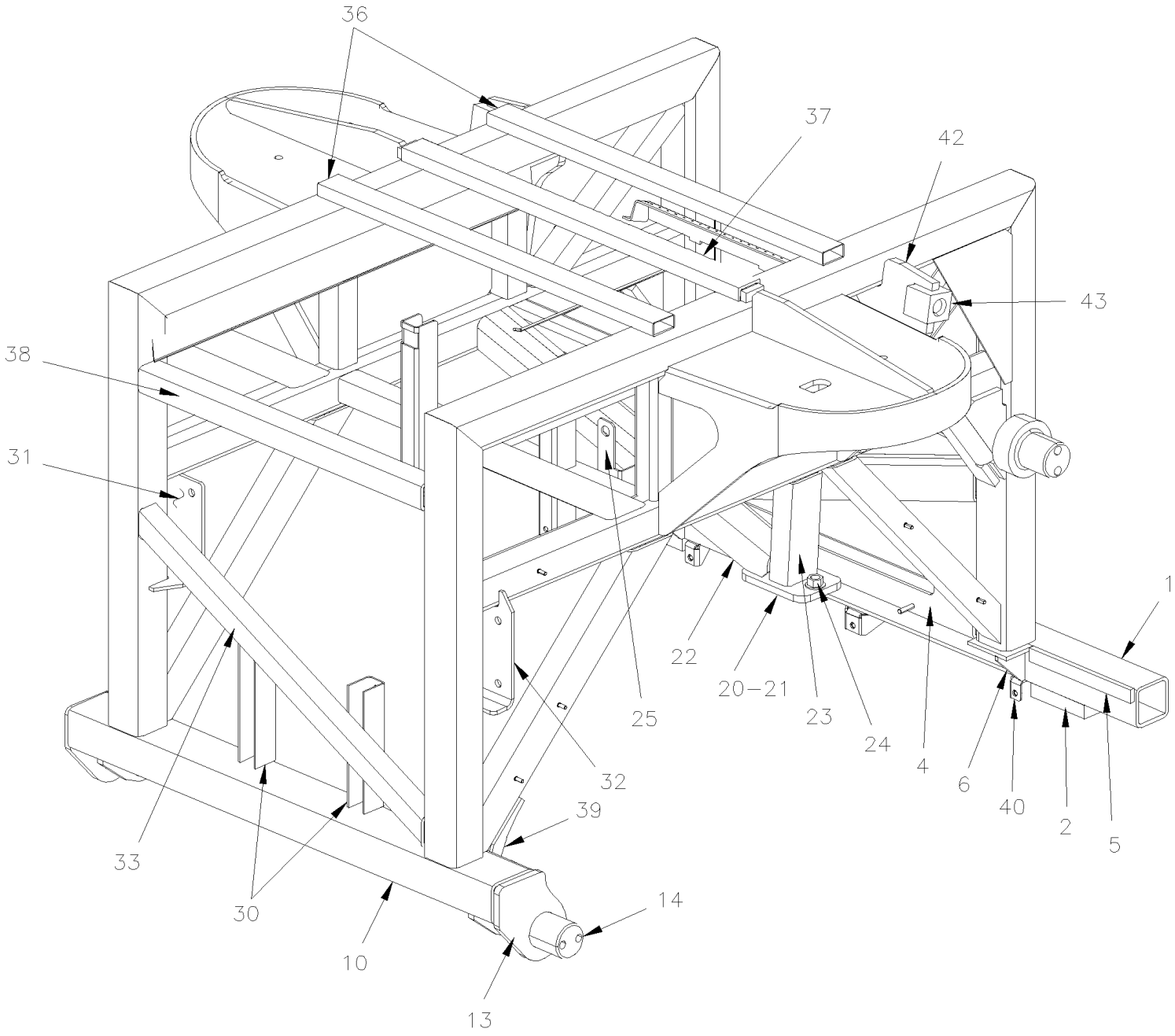

From Y-7046 To 6-8906		Date:07/2024	PAGE:Y2-1897-00

FRONT SUB-FRAME / W/I BEAM RIGID SUSPENSION

Item#	Part	Description	XLII 45	XLII MTH40	XLII MTH45	XLII MTH45E	NOTES
	172400P	FRONT SUBFRAME ASSY	1				
1	172467	FRONT LOWER TUBE ASSY	1				
1	172265	. TUBE 1206MM	1				
2	171991	. ATTACHMENT / TOWING	2				
3	172469	. SPACER 152MM	1				
4	172454	. ANGLE	1				
5	172468	. SPACER 50MM	1				
6	171709	. REINFORCEMENT	2				
10	172159	REAR LOWER TUBE ASSY	1				
11	141649	. ATTACHMENT / (WELDED TO FRAME)	2				
12	172528	. REINFORCEMENT	2				
13	172434	. REINFORCEMENT	2				
14	171049	. PIN ATTACHMENT / SUSPENSION ROD To 1-7594	2				
14	131695	. PIN RADIUS ROD (WELDED TO STRUCTURE) From 1-7597	1				
20	172416	. ATTACHMENT PANHARD / FRONT	1				
21	172417	. PLATE	1				
NS	502164	. PIN DOWEL M16 X 40MM	1				
22	172391	. TUBE	1				
23	172390	. TUBE	1				
24	5001474	. NUT HEXF M16-2.0 DP	2				
25	172493	. SUPPORT HEIGHT CONTROL VALVE (WELDED)	1				
30	172489	SUPPORT AIR TANK / WELDED TO STRUCTURE	2				
31	172398	ATTACHMENT SWAY BAR STREETSIDE	1				
32	172399	ATTACHMENT SWAY BAR CURBSIDE	1				
33	171713	TUBE 779MM	1				
34	172432	TUBE 721MM	1				
35	172395	TUBE 661MM	1				
36	171886	TUBE 785MM	2				
37	172410	U-BEAM 1" X 2" X 788MM	1				
38	171712	TUBE 661MM	2				
39	172474	REINFORCEMENT	2				
40	460441	SUPPORT / AIR SHIELD / CENTER	1				
41	172436	PIN RADIUS ROD (WELDED TO STRUCTURE)	2				
42	172397	ATTACHMENT SHOCK ABSORBER	2				
43	171032	SUPPORT 1"-14 / SHOCK ABSORBER / 55MM	2				
50	212774	PANEL CENTRAL BACKWARD	1				
51	172235	SUPPORT PIPE & HARNESS	1				
52	172305	PANEL CENTRAL FORWARD	1				
53	214225	PANEL CENTRAL FRONT LOWER	1				
53	214771	PANEL CENTRAL FRONT LOWER / W/SPARE TIRE	1				

From Y-7046 To 8-9339		Date:07/2024	PAGE:Y2-1897-10
REAR SUB-FRAME BUS & MTH-45'			

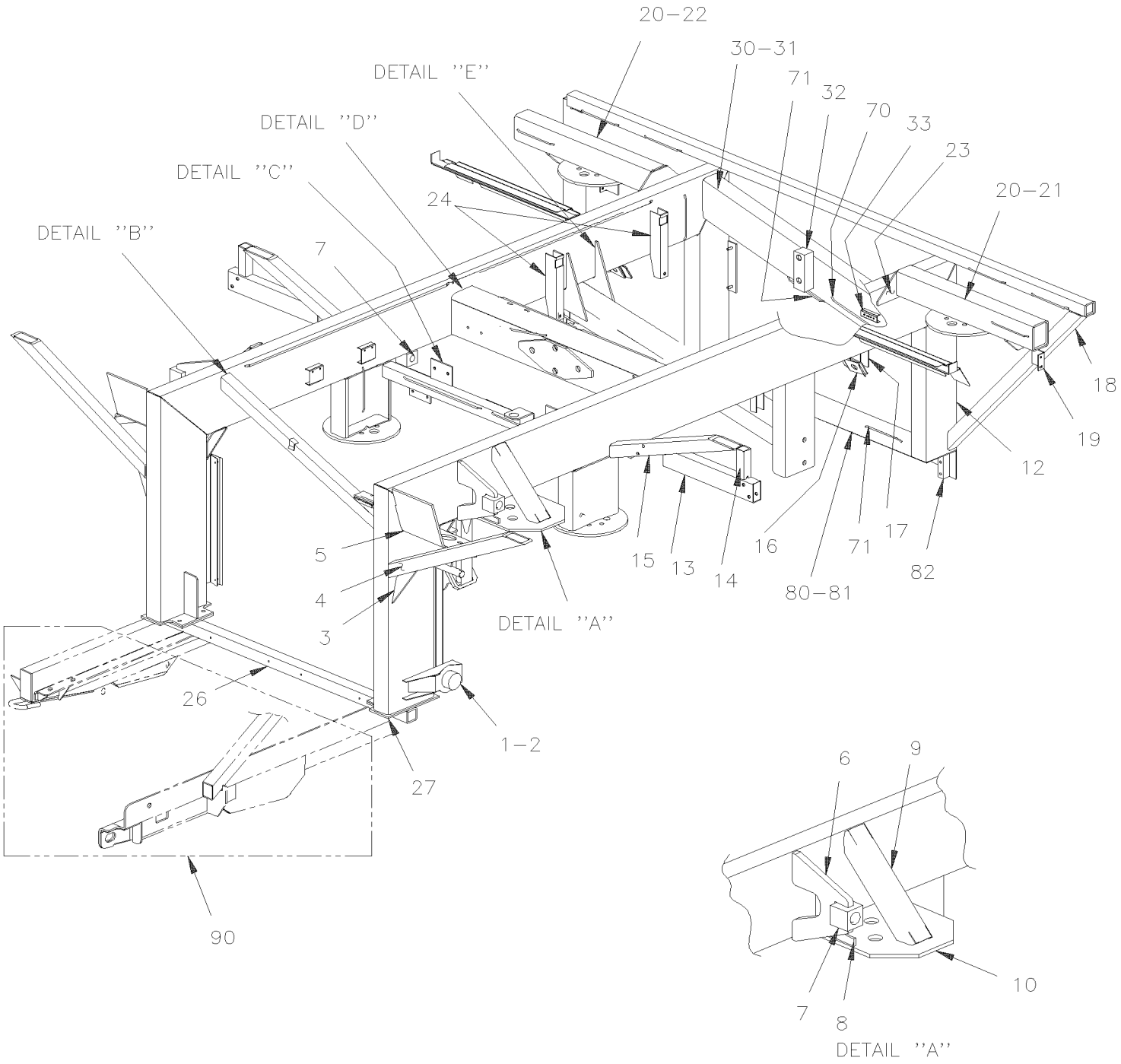

From Y-7046 To 8-9339		Date:07/2024	PAGE:Y2-1897-10
REAR SUB-FRAME BUS & MTH-45'			

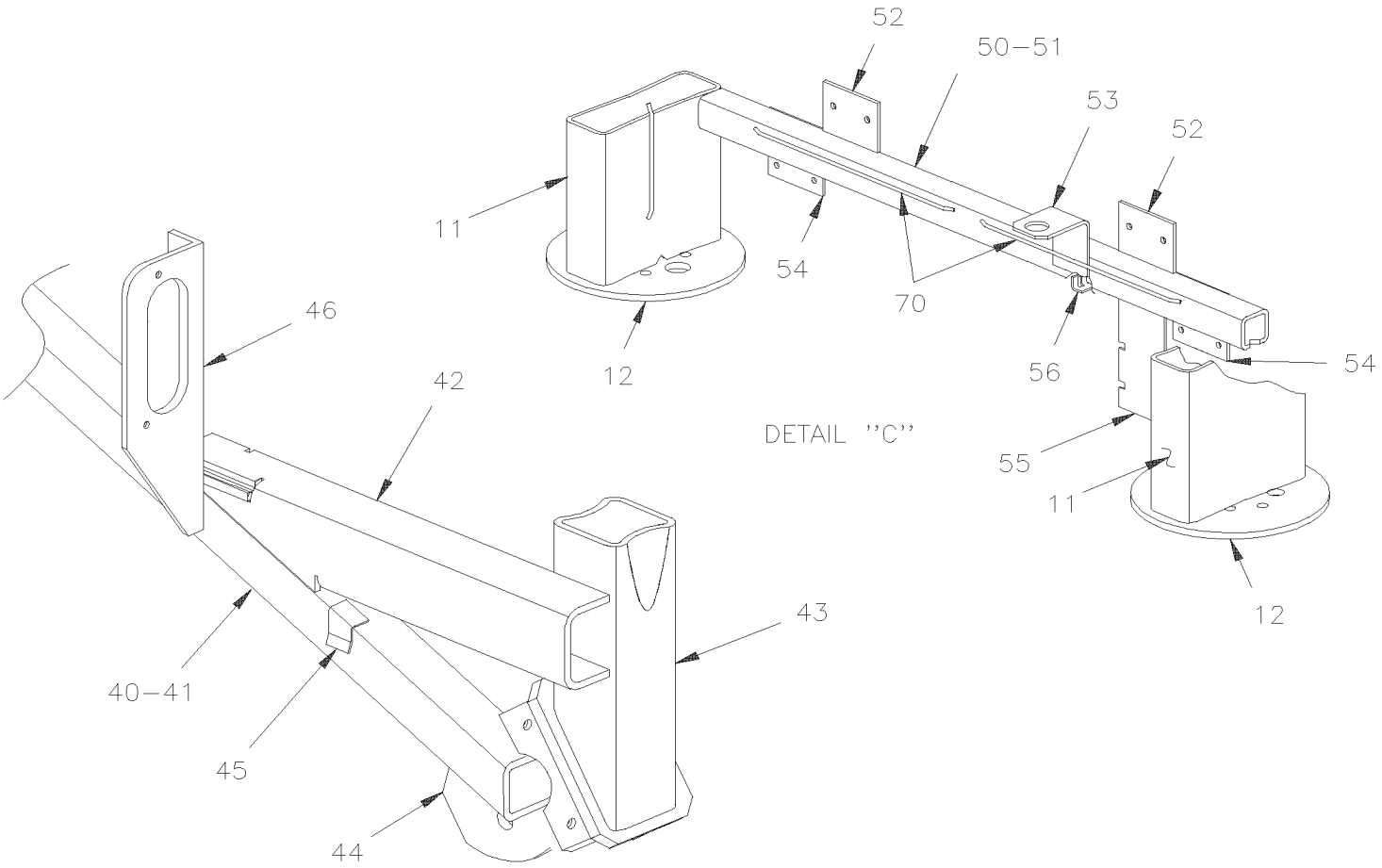

DETAIL ''B''

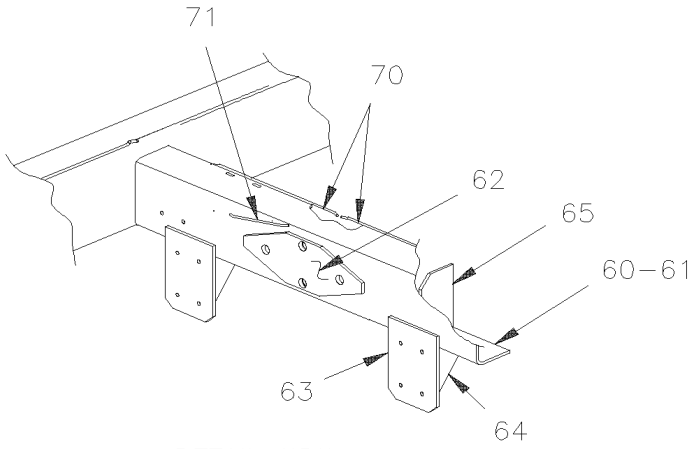

DETAIL ''D''

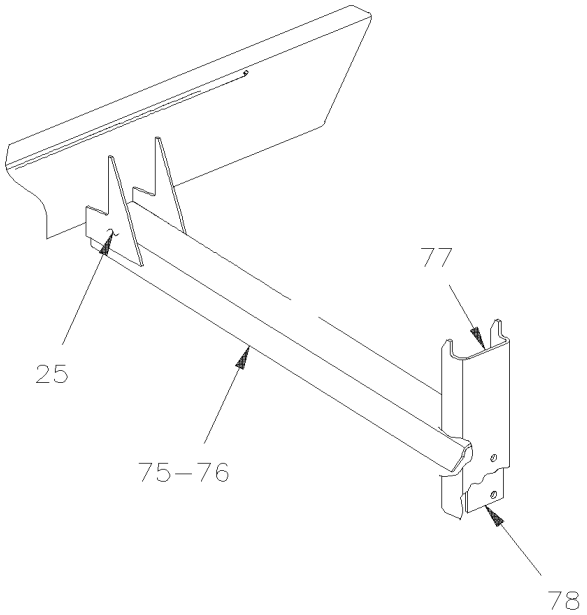

DETAIL ''E''

From Y-7046 To 8-9339		Date:07/2024	PAGE:Y2-1897-10

REAR SUB-FRAME BUS & MTH-45'

Item#	Part	Description	XLII 45	XLII MTH40	XLII MTH45	XLII MTH45E	NOTES
		"WARNING" - "WARNING" -"WARNING" - "WARNING"					
		FOR MTH-45 ENT FROM 7-9096				1	
		SEE NEXT PAGE Y2-1897-11				1	
1	171451	PIN ATTACHMENT / SUSPENSION ROD	2		2		
1	171049	PIN ATTACHMENT / SUSPENSION ROD To 7-9095		2		2	
2	171452	PLATE REINFORCEMENT L.H.	1		1		
2	171454	PLATE REINFORCEMENT R.H.	1		1		
2	171574	PLATE REINFORCEMENT To 7-9095		2		2	
2	171051	PLATE REINFORCEMENT To 7-9095		1		1	
3	170448	GUSSET, FLOOR TUBE REINFORCEMENT	2		2		
4	170261	TUBE 738MM	2		2		
5	172277P	BRACKET / R.H.	1		1		
5	172278P	BRACKET / L.H.	1		1		
6	Call order desk	SUPPORT SHOCK ASSY To 3-7987	2		2		P
6	Call order desk	SUPPORT SHOCK ASSY From 3-7988 To 4-8215	2		2		P
6	Call order desk	SUPPORT SHOCK ASSY From 4-8216	2		2		P
7	171032	. SUPPORT 1"-14 / SHOCK ABSORBER / 55MM	1		1		
8	171392	REINFORCEMENT	4		4		
9	171389	REINFORCEMENT "U" 329MM To 2-7855	2		2		
9	172702	REINFORCEMENT "U" 313MM From 2-7856	2		2		
10	171390	SUPPORT	2		2		
11	131572	SUPPORT	1		1		
12	131356	BELLOW PLATE	2		2		
13	212606	TUBE 430MM	2		2		
13	212581	TUBE 675MM To 7-9095		2		2	
14	212605	TUBE 111MM	2		2		
14	212580	TUBE 162MM To 7-9095		2		2	
15	171505	TUBE 635MM	2		2		
16	214381	SUPPORT PROTECTOR BELLOW	1		1		
16	215239	SUPPORT PROTECTOR BELLOW / STREETSIDE	1		1		
16	215240	SUPPORT PROTECTOR BELLOW / CURBSIDE	1		1		
17	172147	SUPPORT "U" / AIR TANK / 263MM	2		2		
18	170262	TUBE 986MM	2		2		
19	172428	SUPPORT VALVE HEIGHT CONTROL	2		2		
20	171398	TUBE	2		2		
21	121568	SUPPORT SHOCK ASSY CURB SIDE	1		1		
. NS	171032	. SUPPORT 1"-14 / SHOCK ABSORBER / 55MM	1		1		
22	121564	SUPPORT SHOCK ASSY STREET SIDE	1		1		
. NS	171032	. SUPPORT 1"-14 / SHOCK ABSORBER / 55MM	1		1		
23	170254	ATTACHMENT PLATE	2		2		
24	171600	SUPPORT "U" / AIR TANK / 250MM	2		2		

From Y-7046 To 8-9339		Date:07/2024	PAGE:Y2-1897-10

REAR SUB-FRAME BUS & MTH-45'

Item#	Part	Description	XLII 45	XLII MTH40	XLII MTH45	XLII MTH45E	NOTES
25	171501	REINFORCEMENT	2		2		
26	171605	BAR, TRANSMISSION PROTECTOR	1		1		
27	171482	ATTACHMENT PLATE	1		1		
30	Call order desk	BEAM, RADIUS ROD SUPPORT	1		1		P
31	130799	. TUBE 42 7/16"	1		1		
32	214126	. ANCHOR BLOCK	1		1		
33	121507	. SUPPORT "U" 70MM	1		1		
40	Call order desk	ATTACHMENT LATERAL ROD ASSY To 5-8369	1		1		P
40	Call order desk	ATTACHMENT LATERAL ROD ASSY From 5-8370	1		1		P
41	171775	. TUBE 1122MM	1		1		
42	171774	. TUBE 453MM To 5-8369	1		1		
42	172973	. TUBE 454MM From 5-8370	1		1		
43	171773	. TUBE 265MM	1		1		
44	131297	. SUPPORT ASSY / (WELDED) To 1-7475	1		1		
44	131691	. SUPPORT ASSY / (WELDED) From 1-7476 To 6-8844	1		1		
44	131785	. SUPPORT ASSY / (WELDED) From 6-8845	1		1		
45	071081	. SUPPORT	2		2		
46	142187	. SUPPORT PING TANK	1		1		
47	172972	. TUBE 111MM	1		1		
50	Call order desk	TUBE ASSY W/VALVE SUPPORT To 6-8906	1				P R
50	Call order desk	TUBE ASSY W/VALVE SUPPORT	1		1		P I
51	171373	. TUBE 1014MM	1		1		
52	171397	. SUPPORT VALVE	2		2		
53	171993	. SUPPORT VALVE INVERSION	2		2		I
54	171312	. SUPPORT, BULKHEAD ASSY / W/O ABS OPTION	1		1		
55	171973	. SUPPORT AIR TANK	2		2		
56	172991	. ATTACHMENT	2		2		
60	171977P	CHANNEL W/REINFORCEMENT / TRIPODE REAR AXLE / 1015MM WIDE To 5-8358	1				R
60	172987P	CHANNEL W/REINFORCEMENT / TRIPODE REAR AXLE / 1015MM WIDE From 5-8359 To 6-8906	1				R
60	171241P	CHANNEL W/REINFORCEMENT / TRIPODE REAR AXLE / 1015MM WIDE To 5-8358		1	1	1	I
60	172988P	CHANNEL W/REINFORCEMENT / TRIPODE REAR AXLE / 1015MM WIDE From 5-8359		1	1	1	I
61	171059	. REINFORCEMENT "C" 1015MM To 5-8358	1		1		
61	172986	. REINFORCEMENT "C" 1015MM From 5-8359	1		1		
62	172307	. REINFORCEMENT PLATE (LOZANGE FORM)	1		1		
63	171978	. SUPPORT		2	2	2	I
64	171976	. REINFORCEMENT		2	2	2	I
65	171536	. REINFORCEMENT		2	2	2	I
70	212655	ATTACHMENT ROD / WELDED (TO FIX ANYTHING) / 373MM x 11MM DEEP	AR		AR		
71	214025	ATTACHMENT ROD / WELDED (TO FIX ANYTHING) / 177MM x 11MM DEEP	AR		AR		
75	172425	ATTACHMENT LATERAL ROD ASSY To Y-7079	1		1		
75	172509	ATTACHMENT LATERAL ROD ASSY From Y-7080 To 1-7149	1		1		
75	Call order desk	ATTACHMENT LATERAL ROD ASSY From 1-7150	1		1		P

From Y-7046 To 8-9339		Date:07/2024	PAGE:Y2-1897-10

REAR SUB-FRAME BUS & MTH-45'

Item#	Part	Description	XLII 45	XLII MTH40	XLII MTH45	XLII MTH45E	NOTES
76	172426	. CHANNEL "C" 1115MM	1		1		
77	172427	. CHANNEL "C" 422MM To Y-7079	1		1		
77	172507	. CHANNEL "J" 422MM From Y-7080 To 1-7149	1		1		
77	172516	. CHANNEL "J" 422MM From 1-7650	1		1		
78	172226	. REINFORCEMENT SUPPORT	1		1		
80	Call order desk	REAR RADIUS ROD ATTACHMENT ANGLE ASSY To 3-8164	1		1		P
80	Call order desk	REAR RADIUS ROD ATTACHMENT ANGLE ASSY From 4-8165	1		1		P
80	Call order desk	REAR RADIUS ROD ATTACHMENT ANGLE ASSY			1		P S
81	214131	. ANGLE	1		1		
81	214577	. ANGLE	1		1		
81	172992	. ANGLE From 6-8906			1		S
82	214388	. ANCHOR BLOCK	1		1		
90	**Y2-1894-05**	**REAR LH - STRUCTURE**					
90	**Y2-1894-06**	**REAR LH - STRUCTURE**					
90	**Y2-1894-10**	**REAR RH - STRUCTURE**					
		I) WITH INDEPENDANT SUSPENSION					
		R) WITH I BEAM RIGID SUSPENSION					
		S) WITH "SLIDEOUT"					
		P) CALL ORDER DESK FOR SPECIFIC APPLICATION (V.I.N.)					

From 7-9096 To 8-9339		Date:07/2024	PAGE:Y2-1897-11
REAR SUB-FRAME MTH-45' ENT			

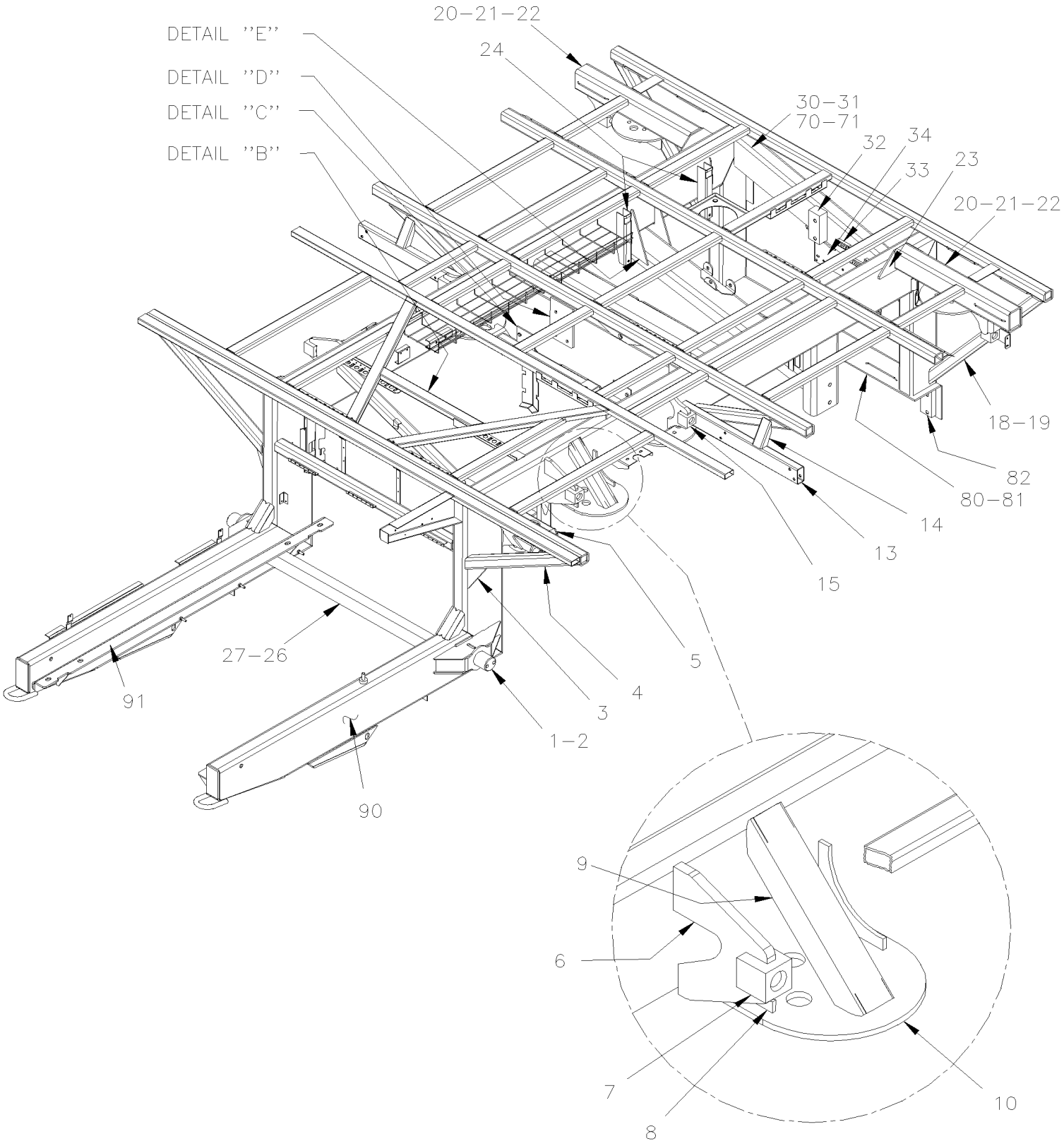

From 7-9096 To 8-9339		Date:07/2024	PAGE:Y2-1897-11
REAR SUB-FRAME MTH-45' ENT			

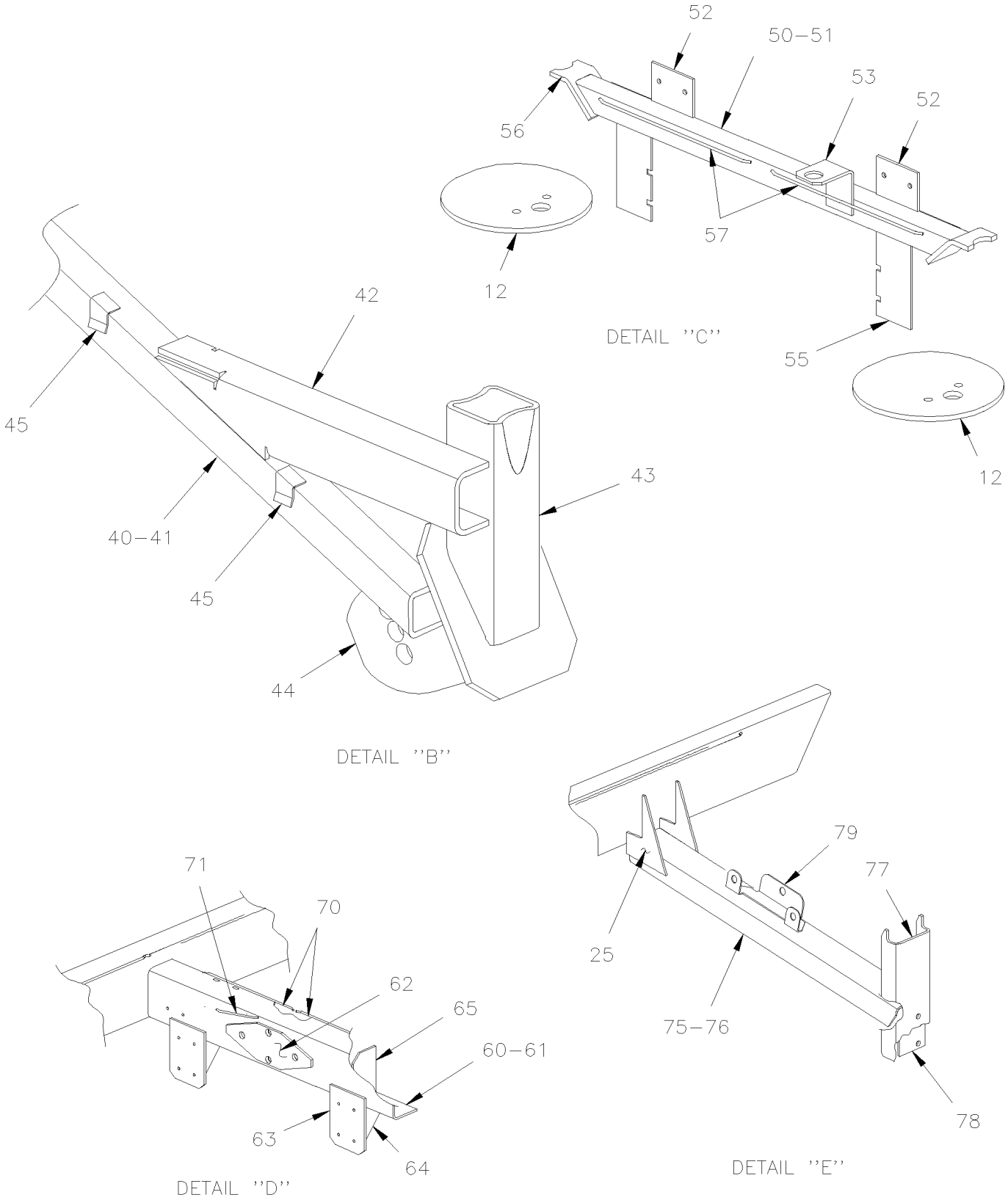

From 7-9096 To 8-9339		Date:07/2024	PAGE:Y2-1897-11

REAR SUB-FRAME MTH-45' ENT

Item#	Part	Description	XLII 45	XLII MTH40	XLII MTH45	XLII MTH45E	NOTES
1	173111P	PIN ATTACHMENT / SUSPENSION ROD				2	
2	171049	. PIN ATTACHMENT / SUSPENSION ROD				1	
2	173112	. PLATE REINFORCEMENT UPPER & LOWER				2	
2	173113	. PLATE REINFORCEMENT FRONT				1	
2	173189	. PLATE REAR				1	
3	170448	GUSSET, FLOOR TUBE REINFORCEMENT				2	
4	170261	TUBE 738MM				2	
5	173154	BRACKET / R.H.				1	
5	173155P	BRACKET / L.H.				1	
6	Call order desk	SUPPORT SHOCK ASSY				2	P T
7	171032	. SUPPORT 1"-14 / SHOCK ABSORBER / 55MM				1	
8	171392	REINFORCEMENT				4	
9	172702	REINFORCEMENT "U" 313MM				2	
10	173156	BELLOW PLATE				2	
12	131356	BELLOW PLATE				2	
13	215498	TUBE SPLASHGUARD SUPPORT				2	
14	215497	REINFORCMENT				2	
15	173115	SUPPORT SHOCK ASSY				1	
18	170262	TUBE 986MM				2	
19	173146	SUPPORT VALVE HEIGHT CONTROL				2	
20	171398	TUBE				2	
21	173135	SUPPORT SHOCK ABSORBER BLOCK				1	
22	171032	SUPPORT 1"-14 / SHOCK ABSORBER / 55MM				1	
23	170254	ATTACHMENT PLATE				2	
24	171600	SUPPORT "U" / AIR TANK / 250MM				2	S
24	172147	SUPPORT "U" / AIR TANK / 263MM				2	C
25	171501	REINFORCEMENT				2	
26	171605	BAR, TRANSMISSION PROTECTOR				1	
27	171482	ATTACHMENT PLATE				1	
30	Call order desk	BEAM, RADIUS ROD SUPPORT				1	P
31	130799	. TUBE 42 7/16"				1	
32	215824	. ANCHOR BLOCK				1	
33	121507	. SUPPORT "U" 70MM				1	
34	173134	SUPPORT VALVE				1	
40	Call order desk	ATTACHMENT LATERAL ROD ASSY				1	P
41	173138	. TUBE				1	
42	173116	. TUBE				1	
43	173139	. TUBE				1	
44	131785	. SUPPORT ASSY / (WELDED)				1	
45	071081	. SUPPORT				2	
50	Call order desk	TUBE ASSY W/VALVE & TANK SUPPORT				1	P
51	173143	. TUBE				1	

From 7-9096 To 8-9339		Date:07/2024	PAGE:Y2-1897-11

REAR SUB-FRAME MTH-45' ENT

Item#	Part	Description	XLII 45	XLII MTH40	XLII MTH45	XLII MTH45E	NOTES
52	171397	. SUPPORT VALVE				2	
53	171993	. SUPPORT VALVE INVERSION				1	
55	171973	. SUPPORT AIR TANK				2	
56	173145	. PLATE SUPPORT TUBE				2	
57	214025	ATTACHMENT ROD / WELDED (TO FIX ANYTHING) / 177MM x 11MM DEEP				4	
60	173144P	CHANNEL W/REINFORCEMENT / TRIPODE REAR AXLE / 1015MM WIDE				1	
61	172986	. REINFORCEMENT "C" 1015MM				1	
62	172307	. REINFORCEMENT PLATE (LOZANGE FORM)				1	
63	171978	. SUPPORT				2	
64	171976	. REINFORCEMENT				2	
65	171536	. REINFORCEMENT				2	
70	212655	ATTACHMENT ROD / WELDED (TO FIX ANYTHING) / 373MM x 11MM DEEP				AR	
71	214025	ATTACHMENT ROD / WELDED (TO FIX ANYTHING) / 177MM x 11MM DEEP				AR	
75	173149P	ATTACHMENT LATERAL ROD ASSY				1	
76	172426	. CHANNEL "C" 1115MM				1	
77	172516	. CHANNEL "J" 422MM				1	
78	172226	. REINFORCEMENT SUPPORT				1	
79	173171	. SUPPORT AIR DRYER				1	
80	Call order desk	REAR RADIUS ROD ATTACHMENT ANGLE ASSY				1	P
81	173290	. ANGLE				1	
82	173291	. ANCHOR BLOCK				1	
NS	173191	SUPPORT MULTI-FUNCTION 371MM To 8-9310				AR	
88	173403	SUPPORT MULTI-FUNCTION 395MM From 8-9311				1	
NS	173192	SUPPORT MULTI-FUNCTION 360MM				AR	
90	**Y2-1894-11**	**REAR RH - STRUCTURE**					
91	**Y2-1894-06**	**REAR LH - STRUCTURE**					
		C) CURBE SIDE					
		S) STREET SIDE					
		T) USE FOR TAG AXLE SHOCK					
		P) CALL ORDER DESK FOR SPECIFIC APPLICATION (V.I.N.)					

From Y-7046 To 3-8164		Date:07/2024	PAGE:Y2-1897-50
FRONT SUB-FRAME / W/INDEPENDENT SUSPENSION - 16500 LBS			

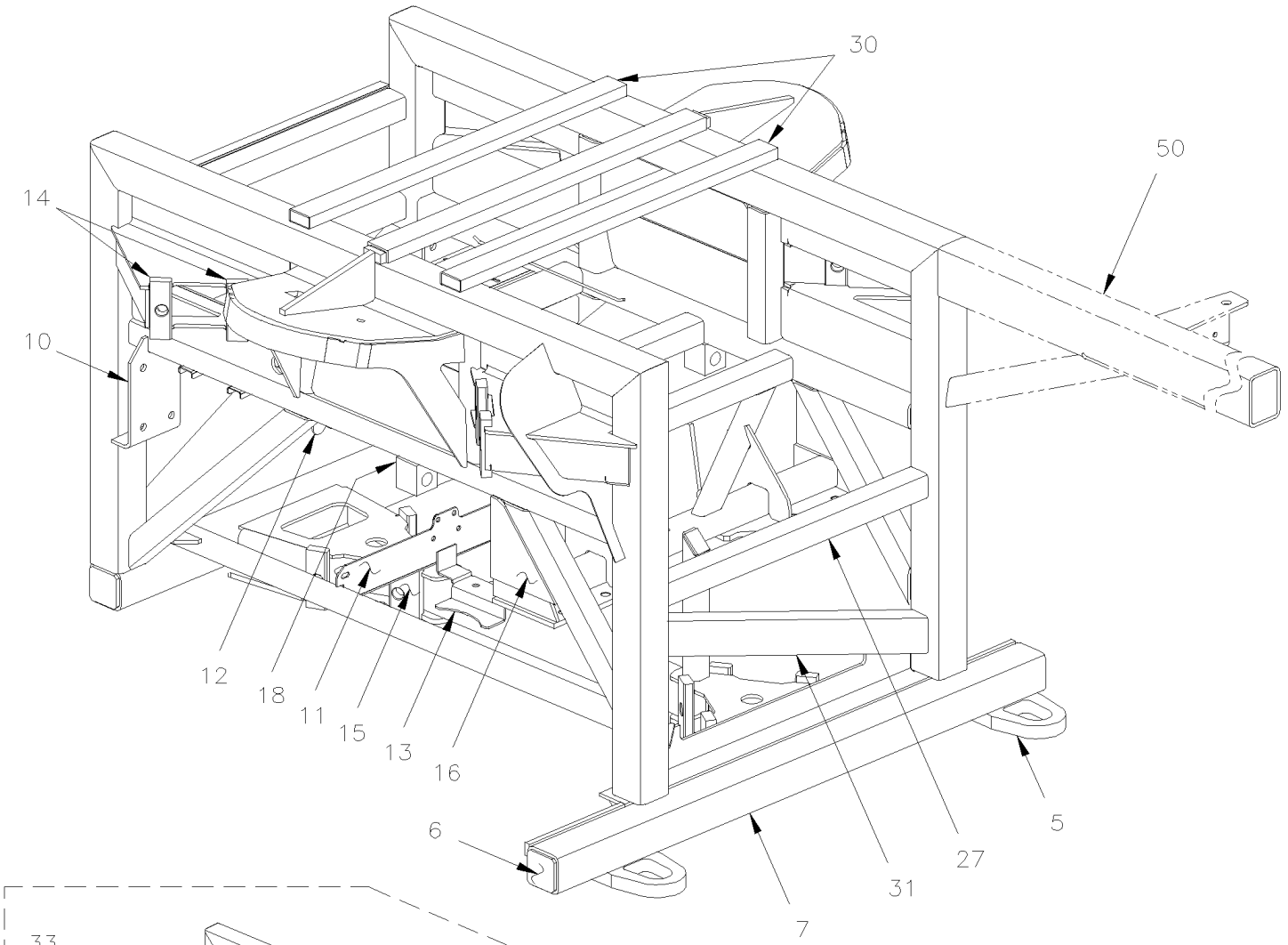

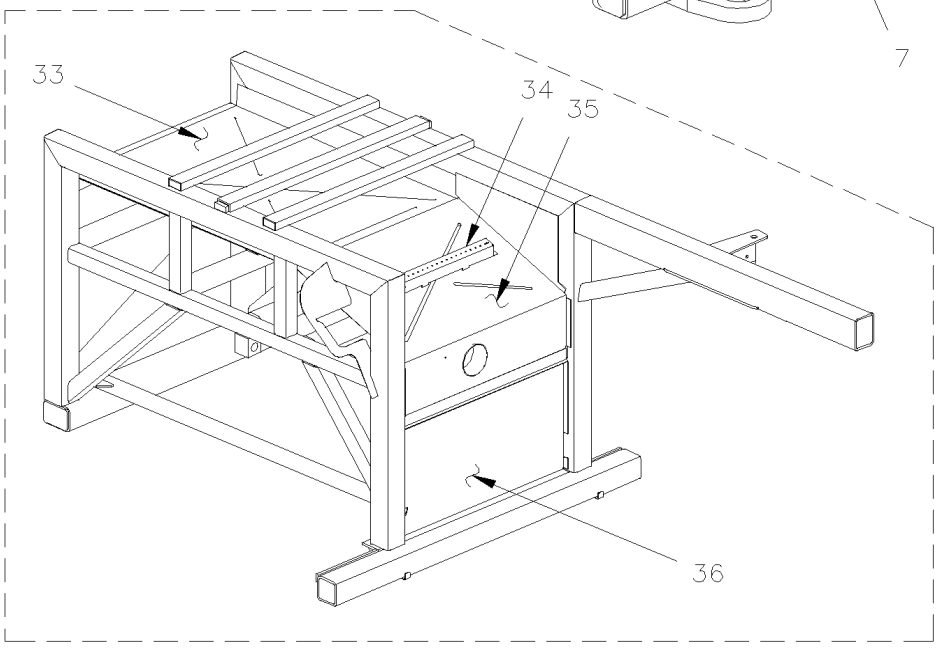

From Y-7046 To 3-8164		Date:07/2024	PAGE:Y2-1897-50
FRONT SUB-FRAME / W/INDEPENDENT SUSPENSION - 16500 LBS			

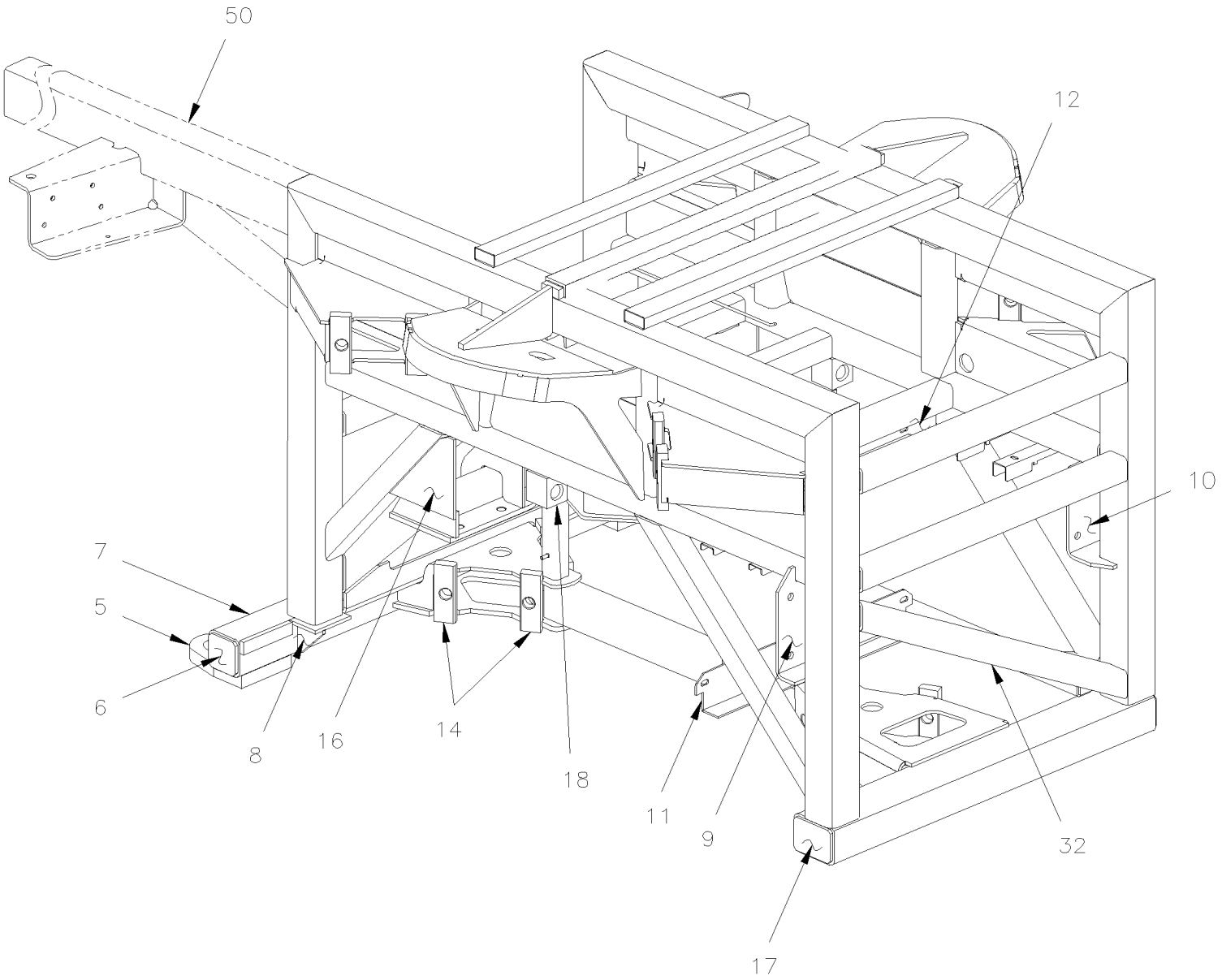

From Y-7046 To 3-8164		Date:07/2024	PAGE:Y2-1897-50

FRONT SUB-FRAME / W/INDEPENDENT SUSPENSION - 16500 LBS

Item#	Part	Description	XLII 45	XLII MTH40	XLII MTH45	XLII MTH45E	NOTES
	172522P	FRONT SUB-FRAME ASSY / XL-II BUS W/IND 16500	1				
	172301P	FRONT SUB-FRAME ASSY / XL-II MTH W/IND 16500		1	1	1	M
5	171991	. ATTACHMENT / TOWING	2	2	2	2	
6	220944	. CLOSING PLATE 67MM X 67MM	2	2	2	2	
7	172082	. TUBE 1095MM	1	1	1	1	
8	171709	. REINFORCEMENT	2	2	2	2	
9	171908	. ATTACHMENT SWAY BAR STREETSIDE	1	1	1	1	
10	171718	. ATTACHMENT SWAY BAR CURBSIDE	1	1	1	1	
11	171942	. SUPPORT AIR TANK / LOWER	1	1	1	1	
12	171815	. SUPPORT AIR TANK / UPPER	1	1	1	1	
13	172193	. SUPPORT AIR TANK / LOWER	1	1	1	1	
14	171789	. ATTACHMENT 38MM WIDE	14	14	14	14	
15	171710	. ATTACHMENT 57MM WIDE	2	2	2	2	
16	171856	. REINFORCEMENT	2	2	2	2	
17	171888	. CLOSING PLATE 67MM X 92MM	2	2	2	2	
18	110627	. ATTACHMENT PIN 1"-14 / SHOCK ABSORBER / 50.8MM LONG	2	2	2	2	
27	171712	. TUBE 661MM	5	5	5	5	
30	171886	. TUBE 785MM	2	2	2	2	
30	172410	. U-BEAM 1" X 2" X 788MM	1	1	1	1	
31	172432	. TUBE 721MM	1	1	1	1	
32	171713	. TUBE 779MM	1	1	1	1	
33	212774	. PANEL CENTRAL BACKWARD	1	1	1	1	
34	172235	. SUPPORT PIPE & HARNESS	1	1	1	1	
35	172305	PANEL CENTRAL FORWARD	1	1	1	1	
36	214762	PANEL CENTRAL FRONT LOWER / W/SPARE TIRE	1				
36	212773	PANEL CENTRAL FRONT LOWER		1	1	1	
36	213208	CLOSING PANEL REAR TIRE		1	1	1	M
50	**Y2-1895-10**	**FRONT LOWER FLOOR STRUCTURE - BUS**					
		M) WITH "MARATHON" CONVERTER'S					

From 4-8165 To 8-9339		Date:07/2024	PAGE:Y2-1897-51
FRONT SUB-FRAME / W/INDEPENDENT SUSPENSION - 18000 LBS			

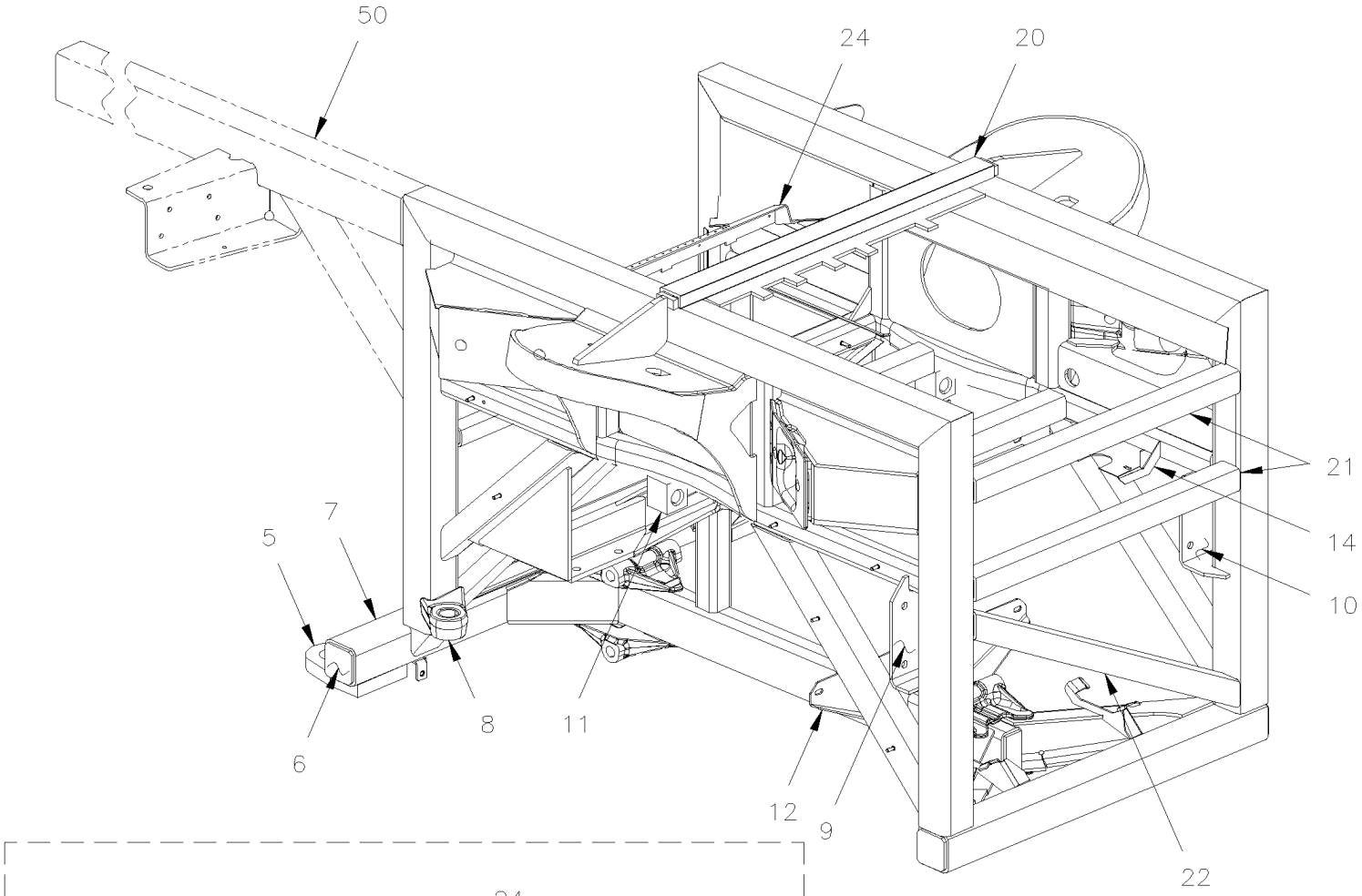

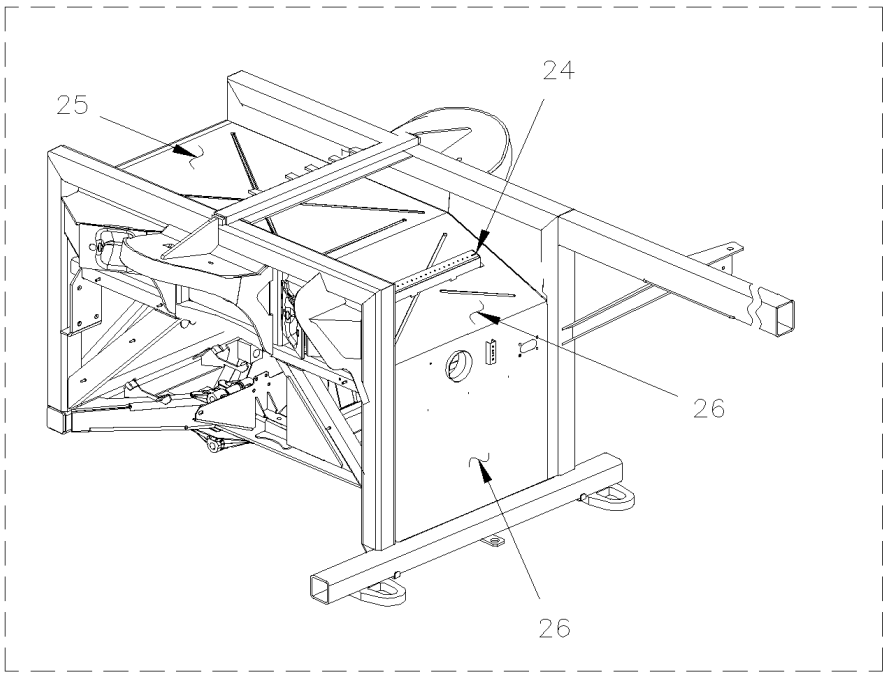

From 4-8165 To 8-9339		Date:07/2024	PAGE:Y2-1897-51
FRONT SUB-FRAME / W/INDEPENDENT SUSPENSION - 18000 LBS			

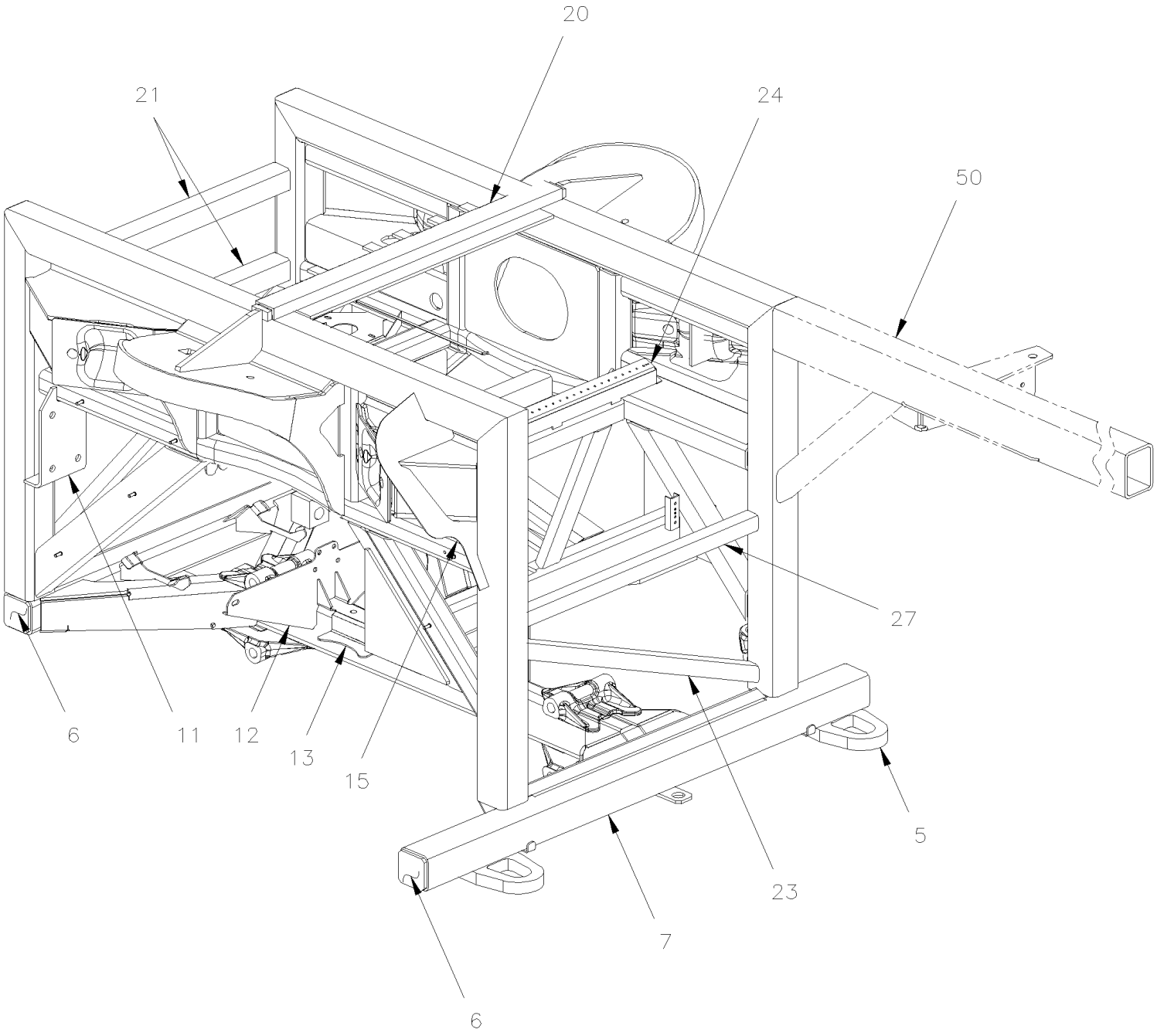

From 4-8165 To 8-9339		Date:07/2024	PAGE:Y2-1897-51

FRONT SUB-FRAME / W/INDEPENDENT SUSPENSION - 18000 LBS

Item#	Part	Description	XLII 45	XLII MTH40	XLII MTH45	XLII MTH45E	NOTES
	172792P	FRONT SUB-FRAME ASSY / XL-II BUS W/IND 18000 To 6-8906	1				
	172724P	FRONT SUB-FRAME ASSY / XL-II MTH W/IND 18000		1	1	1	
5	171991	. ATTACHMENT / TOWING	2	2	2	2	
6	220944	. CLOSING PLATE 67MM X 67MM	6	6	6	6	
7	172265	. TUBE 1206MM	1	1	1	1	
8	172731	. SUPPORT POWER STEERING CYLINDER		1	1	1	
9	171908	. ATTACHMENT SWAY BAR STREETSIDE	1	1	1	1	
10	171718	. ATTACHMENT SWAY BAR CURBSIDE	1	1	1	1	
11	110627	. ATTACHMENT PIN 1"-14 / SHOCK ABSORBER / 50.8MM LONG	2	2	2	2	
12	172704	. SUPPORT AIR TANK / LOWER	1	1	1	1	
13	172705	. SUPPORT AIR TANK / LOWER	1	1	1	1	
14	131746	. SUPPORT AIR TANK / BELLOW To 6-8805		2	2	2	
14	173028	. SUPPORT CURBSIDE From 6-8806		1	1	1	
14	173029	. SUPPORT STREET SIDE From 6-8806		1	1	1	
NS	131747	. SUPPORT L.H. "KNEELING" TANK To 6-8906	1				
NS	131748	. SUPPORT R.H. "KNEELING" TANK To 6-8906	1				
15	172868	. PLATE To 7-8949	2	2	2	2	
15	173282	. PLATE From 7-8950		2	2	2	
20	172736	. REINFORCEMENT SUPPORT	1	1	1	1	
21	171712	. TUBE 661MM	3	3	3	3	
22	171713	. TUBE 779MM	1	1	1	1	
23	172712	. TUBE 733MM	1	1	1	1	
24	172235	. SUPPORT PIPE & HARNESS	1	1	1	1	
25	212774	. PANEL CENTRAL BACKWARD	1	1	1	1	
26	172849	. PANEL CENTRAL FORWARD & LOWER To 6-8906	1				
26	172716	. PANEL CENTRAL FORWARD & LOWER		1	1	1	
26	172842	. PANEL CENTRAL FORWARD & LOWER		1	1	1	M
26	213802	. PANEL / CENTER / R.H. W/SMALL A/C SYSTEM		1	1	1	M
27	172719	. TUBE 661MM	1	1	1	1	
50	**Y2-1895-10**	**FRONT LOWER FLOOR STRUCTURE - BUS**					
		M) USE ONLY WITH "MARATHON" CONVERTER					

From Y-7046 To 5-8699		Date:07/2024	PAGE:Y2-1898-00
ESCAPE HATCH - INSTALLATION			

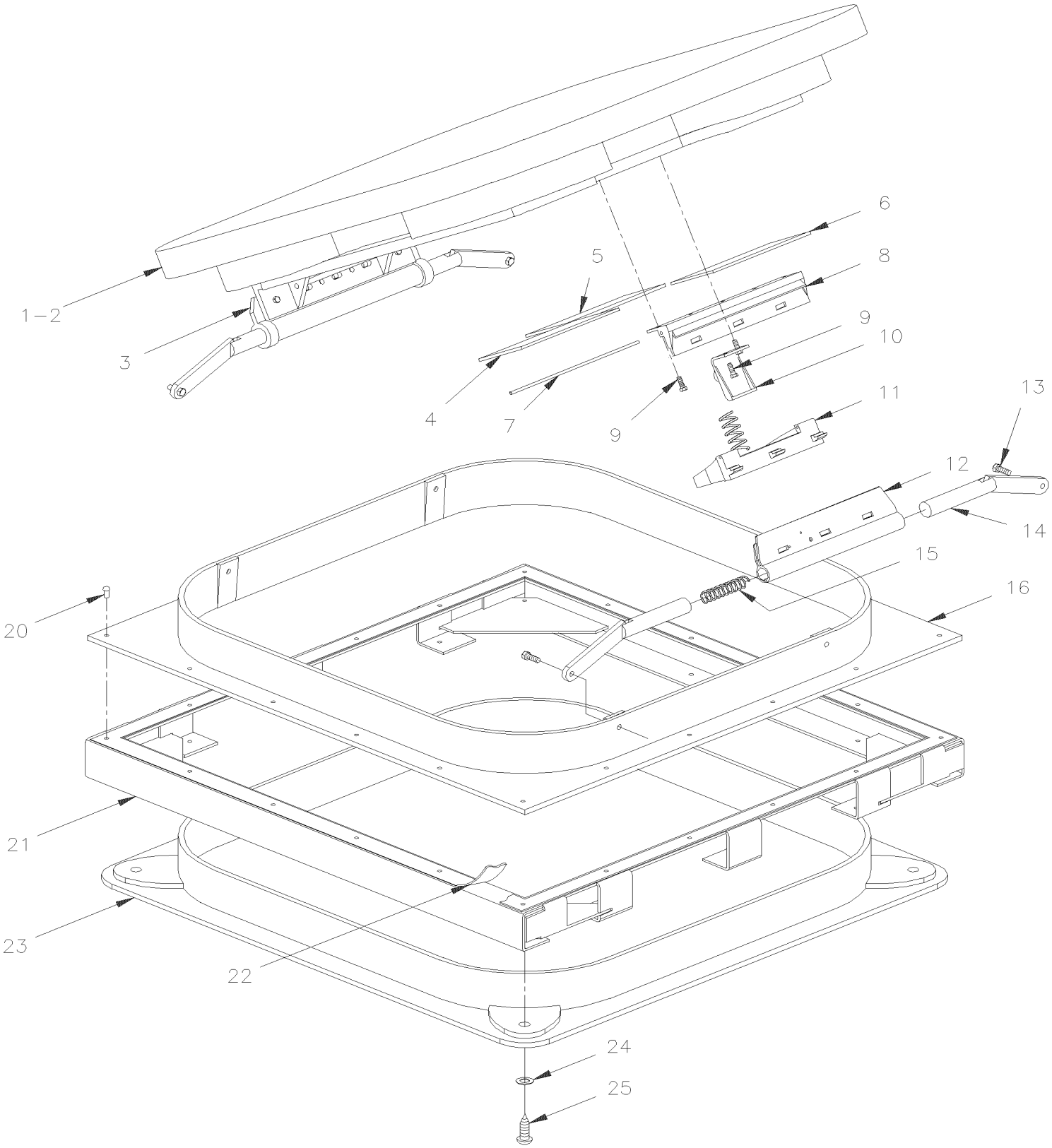

From Y-7046 To 5-8699		Date:07/2024	PAGE:Y2-1898-00

ESCAPE HATCH - INSTALLATION

Item#	Part	Description	XLII 45	XLII MTH40	XLII MTH45	XLII MTH45E	NOTES
1	950291	HATCH ASSY / 23" X 23" GREY	1	1	1	1	
2	950069	. SEAL, GASKET KIT	1	1	1	1	
3	N.S.S.	. HINGE	1	1	1	1	1
4	291263	. DECAL / "EMERGENCY..." / ENGLISH & FRANCAIS	1	1	1	1	
5	291265	. DECAL, "INSTRUCTION... FRENCH..."	1	1	1	1	
5	403651	. DECAL, "EMERGEGENCY... JAPAN"	1	1	1	1	
5	403696	. DECAL / BRAILLE / EMERGENCY EXIT ONLY / ENGLISH & FRANCAIS	1	1	1	1	
6	291264	. DECAL, "SORTIE D'URGENCE..."	1	1	1	1	
7	950046	. DECAL "EMERGENCY..."	1	1	1	1	
8	790373	. BASE, RELEASE / GREY	1	1	1	1	
9	N.S.P.	. SCREW	AR	AR	AR	AR	2
10	790236	. TAB, BLACK	1	1	1	1	
11	790371	. HANDLE, RELEASE W/SPRING / GREY	1	1	1	1	
12	790375	. HINGE, RELEASE / GREY	1	1	1	1	
13	790372	. SCREW SHR HEXS 7/16x3/16 {5/16-18	4	4	4	4	
13	950449	. SCREW CAP BUT TORX 5/16-18x3/4 BK G8	4	4	4	4	
NS	950450	. SPACER BUSHING 5/16I.D.x 7/16O.D.x 3/16TH	4	4	4	4	
14	790436	. LINK & LEVER ASSY	4	4	4	4	
15	790449	. SPRING COMPRESSION / .549 O.D. x 2.590 x .078	4	4	4	4	
16	950205	. FRAME ASSY, EXTERIOR FIBERGLASS / 23" X 23" GREY	1	1	1	1	
NS	680532	. SEALANT SIKA #221 / GREY / 310ml CARTRIDGE	1	1	1	1	
17	N8891498	. HINGE COVER GREY	1	1	1	1	
18	790662	. RELEASE HINGE SHIELD ASSY GREY	1	1	1	1	
19	790663	. RELEASE KNOB W/SCREW / RED	1	1	1	1	
20	504546	RIVET CHY MONOLOK PRDG 1/4x5/8 ZP	AR	AR	AR	AR	
21	292398	FRAME ASSY, MOUNTING 23" X 23"	1	1	1	1	
22	680093	SEALANT TAPE BUTYL / GREY / 1/16"x1 1/2"x50' /71079B11760	AR	AR	AR	AR	
23	291720	MOULDING, INTERIOR 23" X 23" GREY	1	1	1	1	
24	504399	WASHER RETAINER SNAP CAP #10	4	4	4	4	
25	500641	SCREW TP PAN PH #8x3/4 Z050	4	4	4	4	
NS	504400	SNAP CAP #10 FINISHING BLACK	4	4	4	4	
		1) NOT SOLD SEPARATELY					
		2) NOT SOLD BY PREVOST (SEE MANUFACTURING PART NUMBER AT END OF DESCRIPTION LINE)					

From 5-8700 To 8-9339		Date:07/2024	PAGE:Y2-1898-01
ESCAPE HATCH - INSTALLATION			

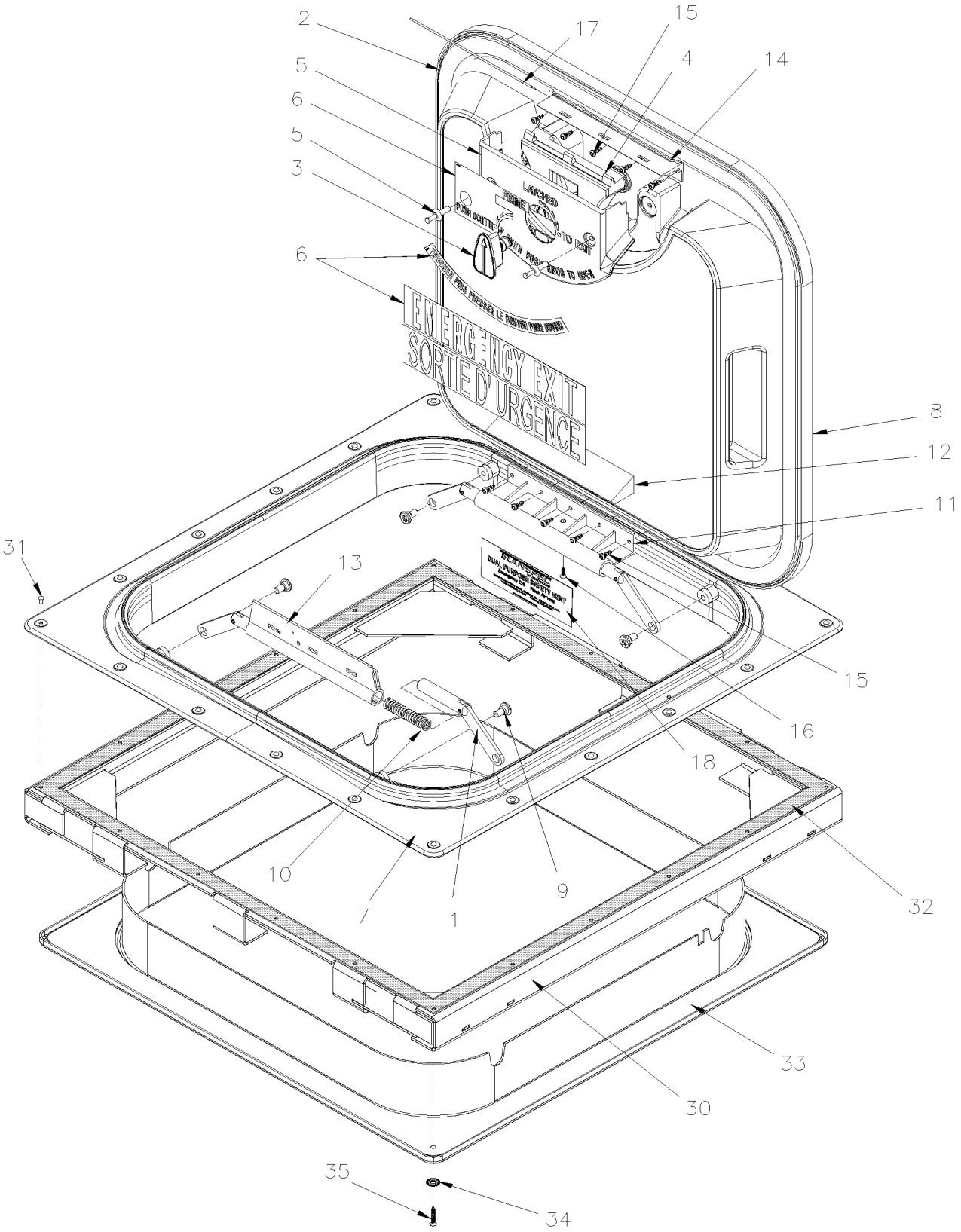

From 5-8700 To 8-9339		Date:07/2024	PAGE:Y2-1898-01

ESCAPE HATCH - INSTALLATION

Item#	Part	Description	XLII 45	XLII MTH40	XLII MTH45	XLII MTH45E	NOTES
	950396	HATCH ASSY / 23" X 23" GREY / LOW PROFILE GREY / ENG & FRENCH	1	1	1	1	
1	790436	. LINK & LEVER ASSY	4	4	4	4	
2	950069	. SEAL, GASKET KIT	1	1	1	1	
3	790663	. RELEASE KNOB W/SCREW / RED	1	1	1	1	
4	790664	. RELEASE HANDLE ASSY GREY	1	1	1	1	
4	790371	. HANDLE, RELEASE W/SPRING / GREY	1	1	1	1	
5	790662	. RELEASE HINGE SHIELD ASSY GREY	1	1	1	1	
6	950690	. DECAL KIT INSTRUCTION / ENGLISH & FRANCAIS	1	1	1	1	
NS	950229	. DECAL KIT INSTRUCTION / ENGLISH & FRANCAIS	1	1	1	1	
NS	403651	. DECAL, "EMERGEGENCY... JAPAN"	AR	AR	AR	AR	
NS	405775	. DECAL / BRAILLE / EMERGENCY EXIT ONLY / ENGLISH & FRANCAIS	AR	AR	AR	AR	
7	950205	. FRAME ASSY, EXTERIOR FIBERGLASS / 23" X 23" GREY	1	1	1	1	
8	950464	. COVER ASSY / LOW PROFILE / GREY ENGLISH & FRENCH	1	1	1	1	A
9	790372	. SCREW SHR HEXS 7/16x3/16 {5/16-18	4	4	4	4	
9	950449	. SCREW CAP BUT TORX 5/16-18x3/4 BK G8	4	4	4	4	
NS	950450	. SPACER BUSHING 5/16I.D.x 7/16O.D.x 3/16TH	4	4	4	4	
10	790449	. SPRING COMPRESSION / .549 O.D. x 2.590 x .078	4	4	4	4	
11	N.S.S.	. HINGE COVER SECTION	1	1	1	1	1
12	N8891498	. HINGE COVER GREY	1	1	1	1	
13	790375	. HINGE, RELEASE / GREY	1	1	1	1	
14	6982866	. HANDLE BASE	1	1	1	1	
15	N8880007	. SPECIAL TORX SCREW #10 x 1/2 SS	10	10	10	10	
16	7775130	. SCREW FL PH #8 x 1/2 SS	1	1	1	1	
17	950693	. HINGE PIN SS	1	1	1	1	
18	N8891500	DECAL PURPOSE SAFETY VENT	1	1	1	1	
30	292398	FRAME ASSY, MOUNTING 23" X 23"	1	1	1	1	
NS	680532	SEALANT SIKA #221 / GREY / 310ml CARTRIDGE	1	1	1	1	
31	504546	RIVET CHY MONOLOK PRDG 1/4x5/8 ZP	20	20	20	20	
32	680093	SEALANT TAPE BUTYL / GREY / 1/16"x1 1/2"x50' /71079B11760	AR	AR	AR	AR	
33	291720	MOULDING, INTERIOR 23" X 23" GREY	1	1	1	1	
34	500464	WASHER FN CKF .210x.540 SS	4	4	4	4	
35	500629	SCREW TP OV PH #8x1 Z050	4	4	4	4	
		A) INCLUDED ITEMS 2-3-4-5-6-8-11-12-15-16-17					
		1) NOT SOLD SEPARATELY					

		Date:07/2024	Y2-22
HEATING & AIR CONDITIONING			

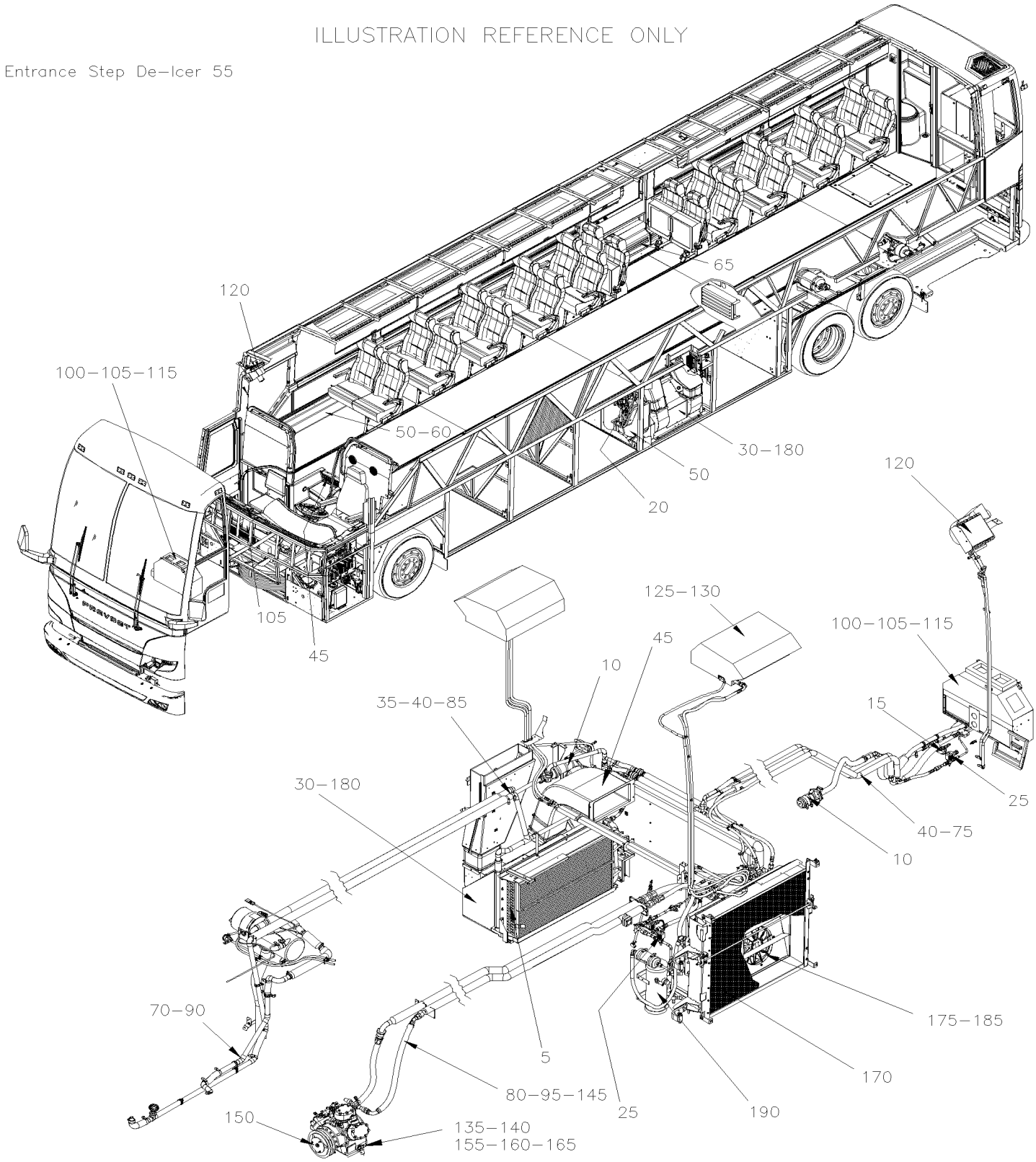

		Date:07/2024	Y2-22

HEATING & AIR CONDITIONING

Item#	Part	Description	XLII 45	XLII MTH40	XLII MTH45	XLII MTH45E	NOTES
1	Y2-2200-00	AIR CONDITIONING SYSTEM From Y-7046 To 8-9339					
2	Y2-2200-05	HEATING SYSTEM From Y-7046 To 8-9339					
3	Y2-2200-50	AIR CONDITIONING SYSTEM From Y-7046 To 8-9339					
5	Y2-2205-00	HEATER & EVAPORATOR COIL - INSTALLATION From Y-7046 To 6-8906					
5	Y2-2205-01	HEATER & EVAPORATOR COIL - INSTALLATION From 6-8806 To 8-9339					
10	Y2-2206-00	WATER PUMP #871052 & #871204 From Y-7046 To 4-8205					
10	Y2-2206-01	WATER PUMP #871342 SEALLESS From 4-8206 To 8-9339					
10	871327	WATER PUMP / "ROTRON" 24 V "SPECIAL OPTION" From Y-7046 To 6-8905					
10	Y2-2206-50	WATER PUMP #871032 From Y-7046 To 8-9339					
10	Y2-2206-99	WATER PUMP #871342 SEALLESS "RETROFIT" From Y-7046 To 8-9339					
15	Y2-2207-00	WATER VALVE - W/MAIN HEATER From Y-7046 To 2-7881					
15	Y2-2207-01	WATER VALVE - W/2 WAYS From 2-7822 To 8-9339					
15	Y2-2207-02	WATER VALVE - W/3 WAYS BY-PASS From 6-8806 To 8-9339					
15	Y2-2207-10	WATER VALVE - W/DRIVER'S HEATER From Y-7046 To 8-9339					
15	Y2-2207-20	WATER VALVE - BYPASS W/WATER HEATER From Y-7046 To 6-8906					
15	Y2-2207-99	WATER VALVE - W/2 WAYS / SERVICE From 2-7822 To 8-9339					
20	Y2-2208-00	A/C EXPANSION VALVE From Y-7046 To 8-9339					
25	Y2-2208-10	REFRIGERANT SOLENOID VALVE From Y-7046 To 8-9339					
30	Y2-2210-00	HEATER & EVAPORATOR BLOWER - INSTALLATION From Y-7046 To 8-9339					
30	Y2-2210-01	HEATER & EVAPORATOR BLOWER - INSTALLATION From 6-8806 To 8-9339					
35	Y2-2210-10	WATER PUMP & FILTER - INSTALLATION From Y-7046 To 8-9339					
35	Y2-2210-11	WATER PUMP - INSTALLATION From 6-8806 To 8-9339					
40	Y2-2210-20	WATER PUMP & FILTER - W/SMALL A/C From Y-7046 To 8-9339					
45	Y2-2220-00	UNDER FLOOR AIR DUCTING From Y-7046 To 6-8906					
45	Y2-2220-01	UNDER FLOOR AIR DUCTING From 6-8806 To 8-9339					
50	Y2-2221-10	DUCTING HEATER & A/C - BUS FLOOR From Y-7046 To 6-8906					
55	Y2-2221-20	ENTRANCE STEP DE-ICER From Y-7046 To 6-8906					
60	Y2-2221-50	DUCTING HEATER & A/C - MTH FLOOR From Y-7046 To 8-9339					
65	Y2-2221-80	AIR DUCT W.C.L. DOOR "RICON" From Y-7046 To 6-8906					
70	Y2-2222-00	HEATER LINE REAR SECTION - BUS From Y-7046 To 2-7764					
70	Y2-2222-01	HEATER LINE REAR SECTION - BUS From 2-7765 To 3-8164					
70	Y2-2222-02	HEATER LINE REAR SECTION - BUS From 4-8165 To 6-8906					
75	Y2-2222-10	A/C & HEATING LINE FRONT SECTION From Y-7046 To 8-9339					
80	Y2-2222-15	A/C LINE REAR SECTION W/05G From Y-7046 To 8-9339					
85	Y2-2222-20	HEATER LINE & PIPING - CENTRAL SYSTEM From Y-7046 To 8-9339					
90	Y2-2222-30	HEATER LINE REAR SECTION - MTH From Y-7046 To 3-8164					
90	Y2-2222-31	HEATER LINE REAR SECTION - MTH From 4-8165 To 8-9339					
95	Y2-2222-50	SMALL A/C LINES & HOSES WITH DETROIT S-60 & R134A From Y-7046 To 3-8164					
95	Y2-2222-51	SMALL A/C LINES & HOSES WITH DETROIT S-60 & R134A From 4-8165 To 8-9339					
100	Y2-2225-00	DRIVER'S HEATER & DEFROSTER ASSY From Y-7046 To 5-8469					
100	Y2-2225-01	DRIVER'S HEATER & DEFROSTER ASSY From 5-8470 To 7-9095					
100	Y2-2225-02	DRIVER'S HEATER & DEFROSTER ASSY WITH MUX From 7-9096 To 8-9339					

		Date:07/2024	Y2-22

HEATING & AIR CONDITIONING

Item#	Part	Description	XLII 45	XLII MTH40	XLII MTH45	XLII MTH45E	NOTES
105	Y2-2230-00	DEFROSTER - INSTALLATION From Y-7046 To 8-9339					
115	870844	BLOWER & MOTOR ASSY - "M.C.C." "CW" / FAN END From Y-7046 To 6-8906					L
115	871360	BLOWER & MOTOR ASSY - "M.C.C." "CCW" / FAN END From 5-8470 To 8-9339					D
120	Y2-2240-10	UPPER WINDSHIELD FAN - INSTALLATION From 3-8131 To 8-9339					
125	Y2-2240-20	BLOWER VENTILATION - PARCEL RACK From Y-7046 To 6-8906					
130	Y2-2240-25	BLOWER ASSY - PARCEL RACK From Y-7046 To 6-8906					
135	Y2-2245-00	A/C COMPRESSOR 05G - INSTALLATION From Y-7046 To 8-9339					
135	Y2-2245-01	A/C COMPRESSOR "ROTOVANE" - INSTALLATION From Y-7046 To 7-9095					
135	Y2-2245-03	A/C COMPRESSOR 05G - INSTALLATION - MUX From 7-9096 To 8-9339					
140	Y2-2245-10	A/C COMPRESSOR SMALL - INSTALLATION From Y-7046 To 3-8164					
140	Y2-2245-11	A/C COMPRESSOR SMALL - INSTALLATION From 4-8165 To 8-9339					
145	Y2-2245-30	A/C AUXILIARY LINE / PARCEL RACK From Y-7046 To 3-8164					
145	Y2-2245-31	A/C AUXILIARY LINE / PARCEL RACK From 4-8165 To 6-8906					
150	Y2-2246-00	A/C CLUTCH 05G - HOUSING MOUNTED From Y-7046 To 8-9339					
155	Y2-2250-00	A/C COMPRESSOR ASSY 05G - THREE PORT From Y-7046 To 6-8795					
155	Y2-2250-01	A/C COMPRESSOR ASSY 05G - TWIN PORT From 6-8796 To 8-9339					
160	Y2-2250-15	A/C ELECTRIC UNLOADER - W/05G COMPRESSOR From Y-7046 To 8-9339					
165	Y2-2251-00	GASKET - 05G A/C COMPRESSOR From Y-7046 To 8-9339					
170	Y2-2255-00	CONDENSOR - INSTALLATION LARGE SYSTEM From Y-7046 To 6-8906					
170	Y2-2255-10	CONDENSOR - INSTALLATION SMALL A/C SYSTEM From Y-7046 To 3-8164					
170	Y2-2255-11	CONDENSOR - INSTALLATION SMALL A/C SYSTEM From 4-8165 To 8-9339					
170	Y2-2255-50	CONDENSOR - INSTALLATION LARGE SYSTEM From Y-7046 To 8-9339					
175	Y2-2260-05	CONDENSOR FAN - INSTALLATION From Y-7046 To 8-9339					
175	Y2-2260-99	CONDENSOR 4 FANS - INSTALLATION / "RETROFIT" From Y-7046 To 8-9339					
180	Y2-2265-00	MOTOR - EVAPORATOR - "PREVOST" - T-17 From Y-7046 To 4-8212					
180	Y2-2265-01	MOTOR - EVAPORATOR - "PREVOST" - T-17 - 2 SPEEDS From 3-8102 To 8-9339					
180	Y2-2265-02	MOTOR - EVAPORATOR BRUSHLESS From Y-7046 To 6-8906					
185	Y2-2265-50	MOTOR - CONDENSOR - "PREVOST" - TF-12 From Y-7046 To 2-7825					
185	Y2-2265-51	MOTOR - CONDENSOR - "PREVOST" - T11G From 2-7826 To 6-8855					
185	Y2-2265-52	MOTOR - CONDENSOR - "PREVOST" - T114 From 6-8856 To 8-9339					
185	Y2-2265-53	MOTOR - CONDENSOR BRUSHLESS From Y-7046 To 6-8906					
190	Y2-2270-00	RECEIVER TANK & FILTER DRYER From Y-7046 To 8-9339					
		D) USE WITH FRONT DEFROSTER					
		L) USE WITH LAVATORY FAN					

From Y-7046 To 8-9339		Date:07/2024	PAGE:Y2-2200-00
AIR CONDITIONING SYSTEM			

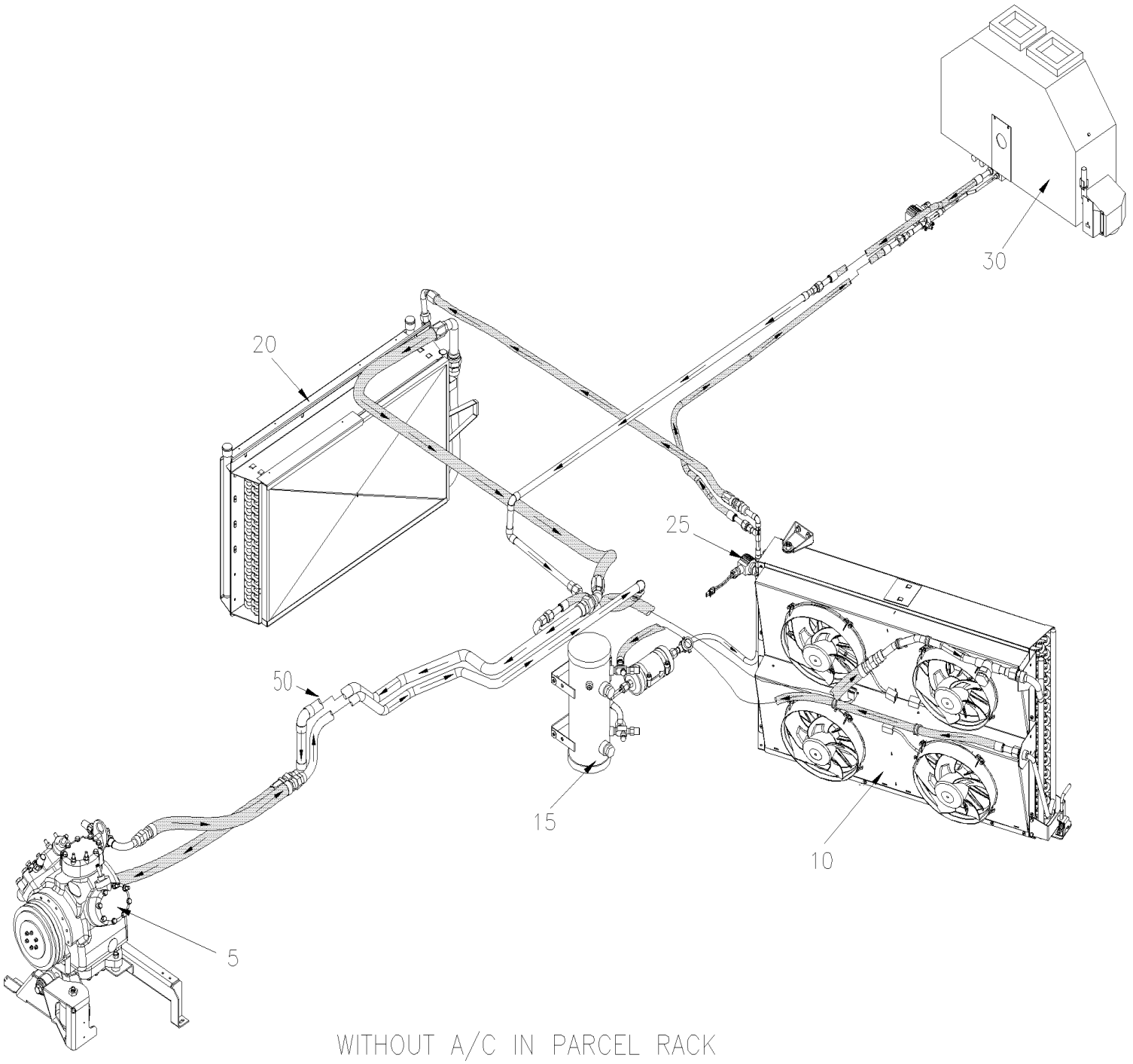

From Y-7046 To 8-9339		Date:07/2024	PAGE:Y2-2200-00
AIR CONDITIONING SYSTEM			

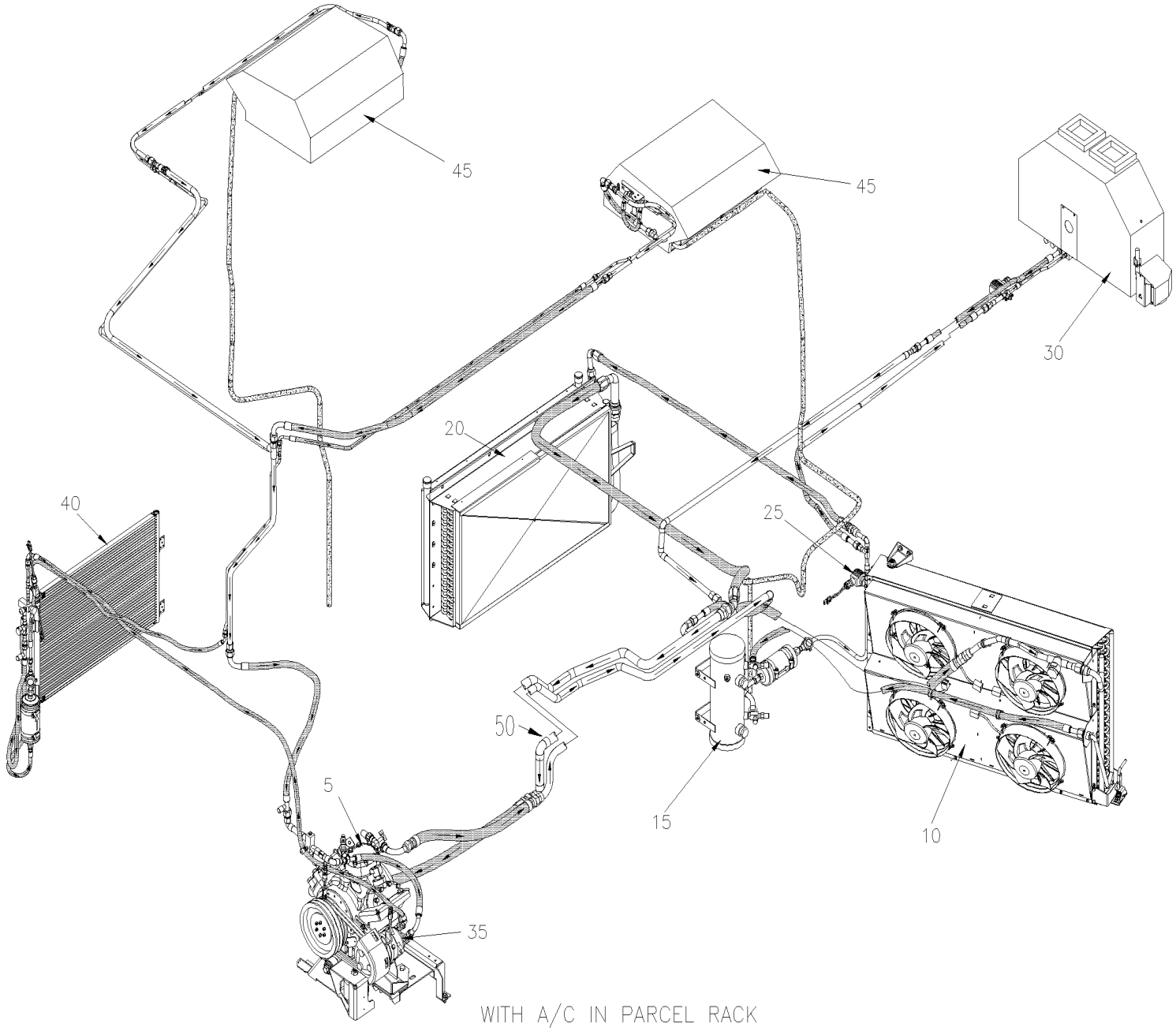

From Y-7046 To 8-9339		Date:07/2024	PAGE:Y2-2200-00

AIR CONDITIONING SYSTEM

Item#	Part	Description	XLII 45	XLII MTH40	XLII MTH45	XLII MTH45E	NOTES
5	Y2-2245-00	A/C COMPRESSOR 05G - INSTALLATION					
5	Y2-2250-00	A/C COMPRESSOR ASSY 05G - THREE PORT					
5	Y2-2250-01	A/C COMPRESSOR ASSY 05G - TWIN PORT					
10	Y2-2255-00	CONDENSOR - INSTALLATION LARGE SYSTEM					
10	Y2-2260-05	CONDENSOR FAN - INSTALLATION					
10	Y2-2260-99	CONDENSOR 4 FANS - INSTALLATION / "RETROFIT"					
15	Y2-2270-00	RECEIVER TANK & FILTER DRYER					
20	Y2-2205-00	HEATER & EVAPORATOR COIL - INSTALLATION					
20	Y2-2205-01	HEATER & EVAPORATOR COIL - INSTALLATION					
25	Y2-2208-10	REFRIGERANT SOLENOID VALVE					
30	Y2-2225-00	DRIVER'S HEATER & DEFROSTER ASSY					
30	Y2-2225-01	DRIVER'S HEATER & DEFROSTER ASSY					
30	Y2-2225-02	DRIVER'S HEATER & DEFROSTER ASSY WITH MUX					
35	Y2-2245-10	A/C COMPRESSOR SMALL - INSTALLATION					
35	Y2-2245-11	A/C COMPRESSOR SMALL - INSTALLATION					
40	Y2-2245-30	A/C AUXILIARY LINE / PARCEL RACK					
40	Y2-2245-31	A/C AUXILIARY LINE / PARCEL RACK					
45	Y2-2240-20	BLOWER VENTILATION - PARCEL RACK					
50	Y2-2222-15	A/C LINE REAR SECTION W/05G					

From Y-7046 To 8-9339		Date:07/2024	PAGE:Y2-2200-05
HEATING SYSTEM			

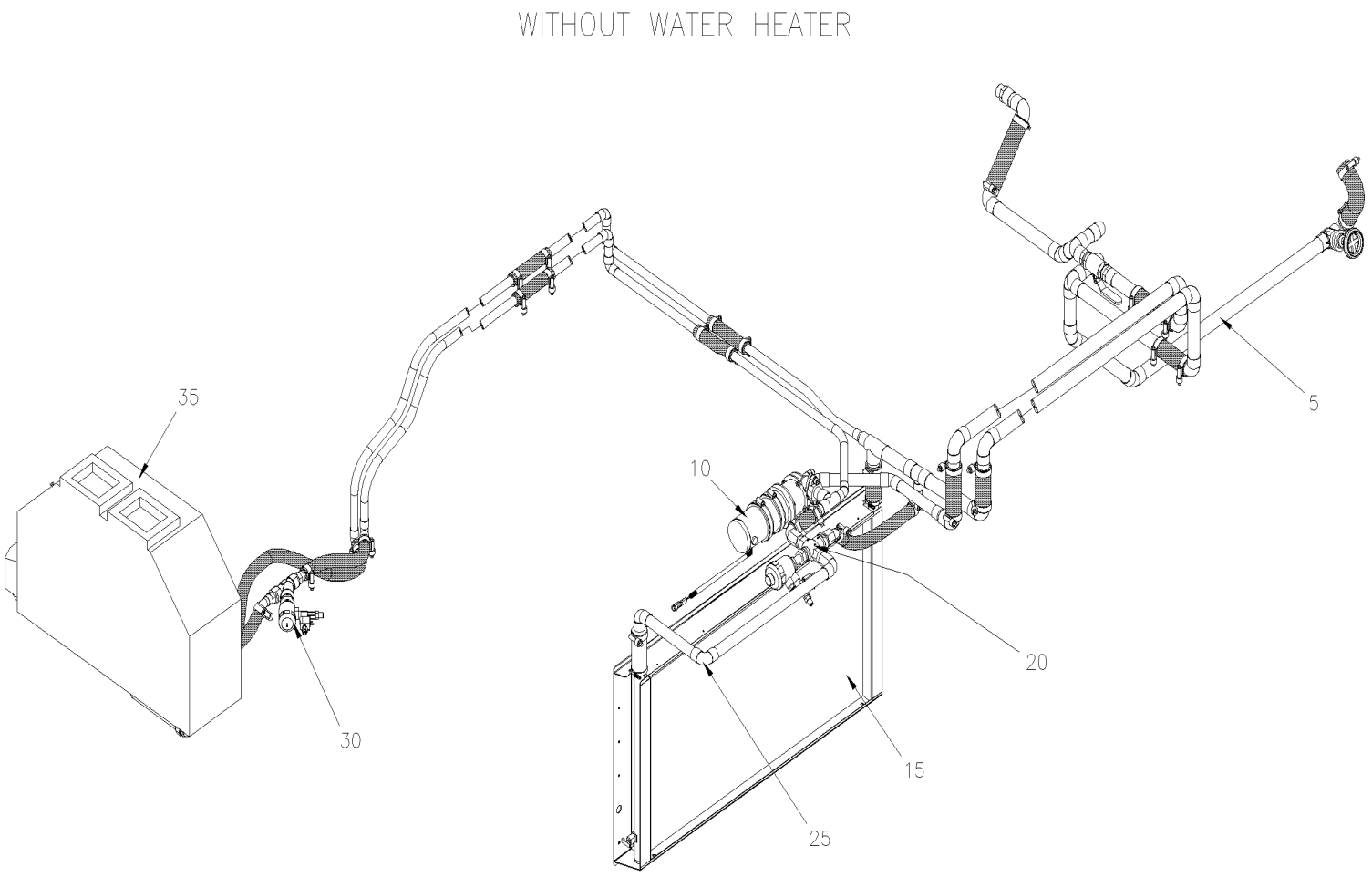

From Y-7046 To 8-9339		Date:07/2024	PAGE:Y2-2200-05
HEATING SYSTEM			

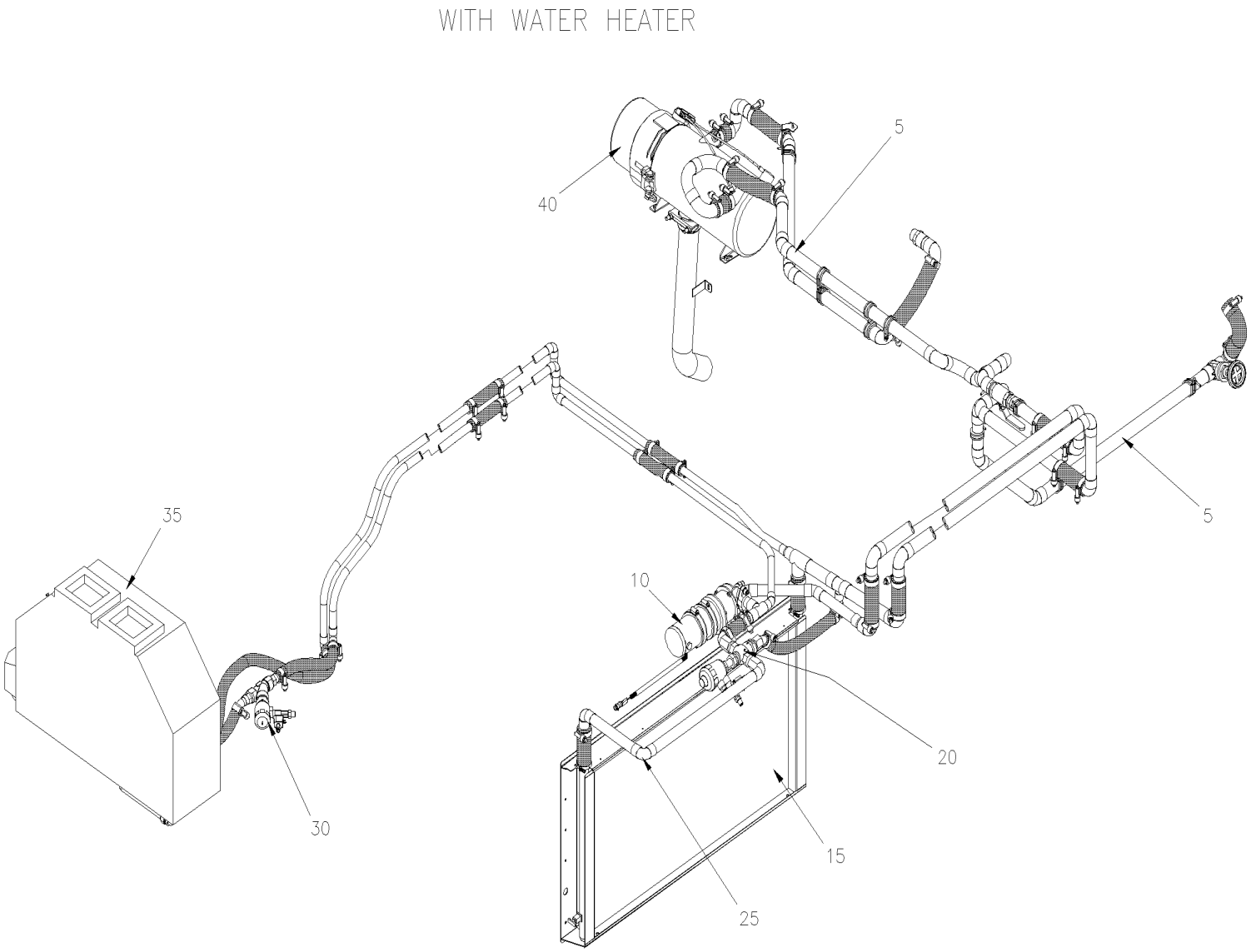

From Y-7046 To 8-9339		Date:07/2024	PAGE:Y2-2200-05

HEATING SYSTEM

Item#	Part	Description	XLII 45	XLII MTH40	XLII MTH45	XLII MTH45E	NOTES
5	Y2-2222-00	HEATER LINE REAR SECTION - BUS					
5	Y2-2222-01	HEATER LINE REAR SECTION - BUS					
5	Y2-2222-02	HEATER LINE REAR SECTION - BUS					
5	Y2-2222-30	HEATER LINE REAR SECTION - MTH					
5	Y2-2222-31	HEATER LINE REAR SECTION - MTH					
10	Y2-2206-00	WATER PUMP #871052 & #871204					
15	Y2-2205-00	HEATER & EVAPORATOR COIL - INSTALLATION					
15	Y2-2210-00	HEATER & EVAPORATOR BLOWER - INSTALLATION					
20	Y2-2207-00	WATER VALVE - W/MAIN HEATER					
20	Y2-2207-01	WATER VALVE - W/2 WAYS					
20	Y2-2207-02	WATER VALVE - W/3 WAYS BY-PASS					
25	Y2-2210-10	WATER PUMP & FILTER - INSTALLATION					
30	Y2-2207-10	WATER VALVE - W/DRIVER'S HEATER					
35	Y2-2230-00	DEFROSTER - INSTALLATION					
40	Y2-2350-10	WATER HEATER - INSTALLATION					
40	Y2-2350-11	WATER HEATER - INSTALLATION					

From Y-7046 To 8-9339		Date:07/2024	PAGE:Y2-2200-50
AIR CONDITIONING SYSTEM			

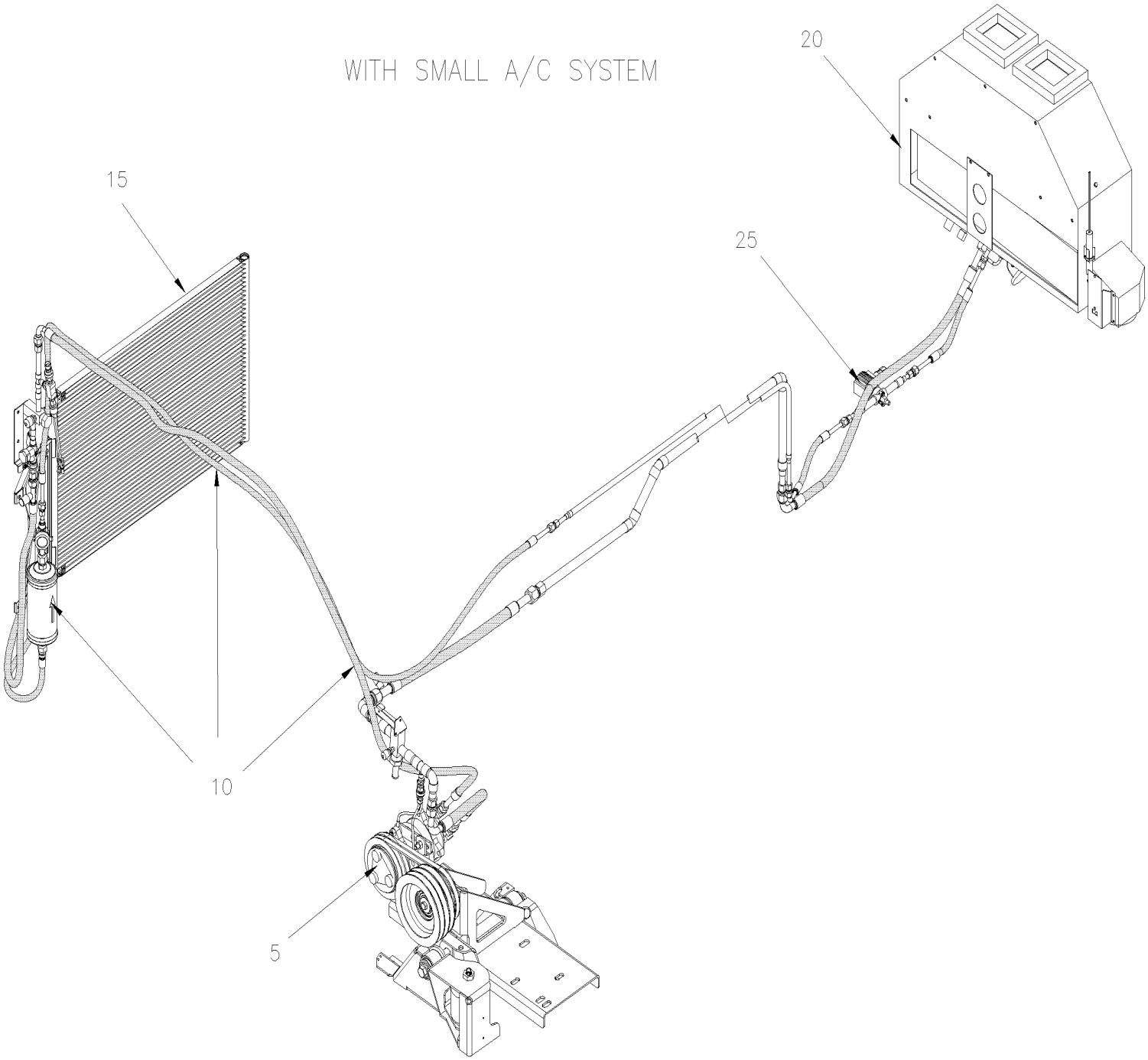

From Y-7046 To 8-9339		Date:07/2024	PAGE:Y2-2200-50
AIR CONDITIONING SYSTEM			

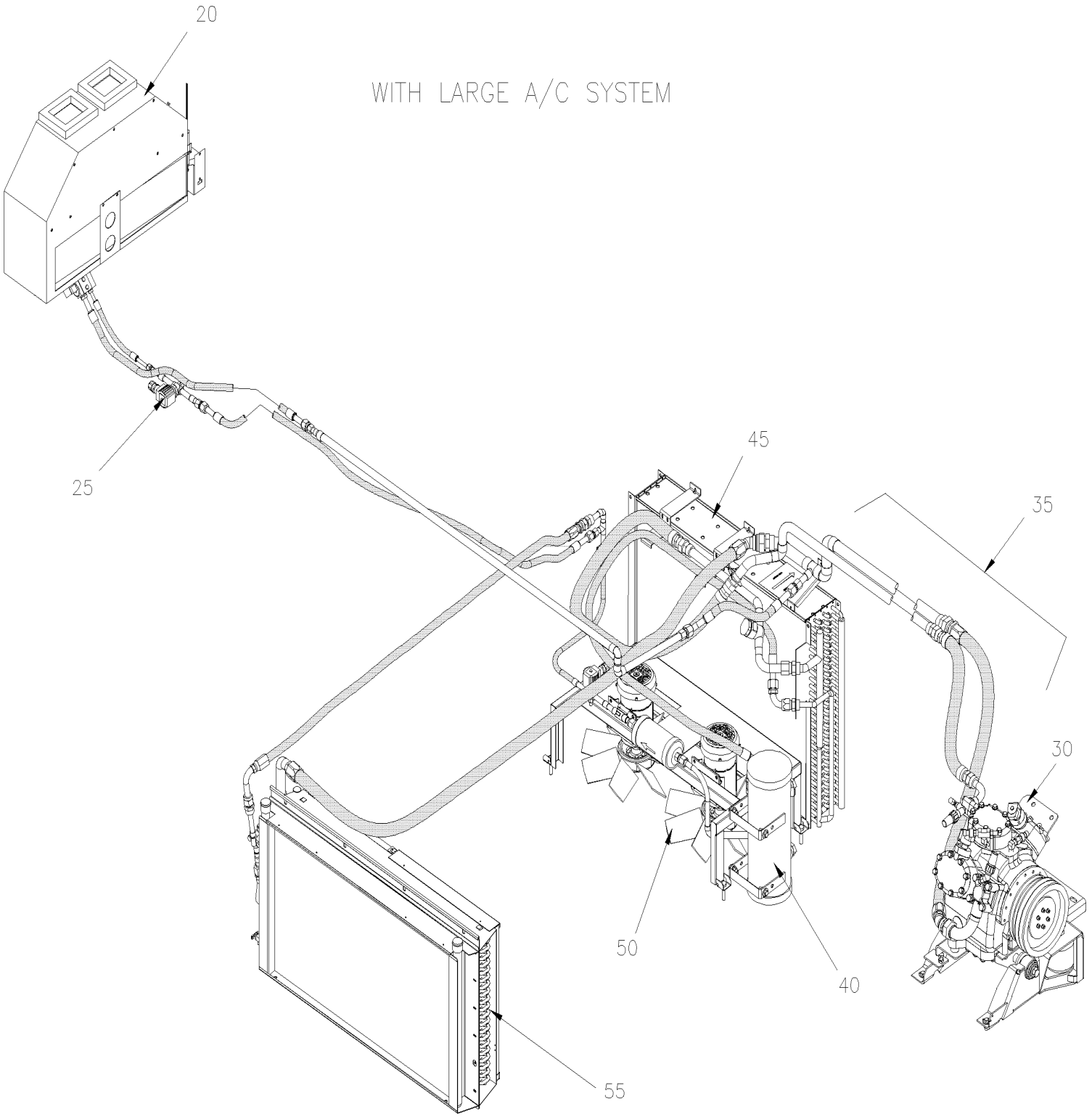

From Y-7046 To 8-9339		Date:07/2024	PAGE:Y2-2200-50

AIR CONDITIONING SYSTEM

Item#	Part	Description	XLII 45	XLII MTH40	XLII MTH45	XLII MTH45E	NOTES
5	Y2-2245-10	A/C COMPRESSOR SMALL - INSTALLATION					
5	Y2-2245-11	A/C COMPRESSOR SMALL - INSTALLATION					
10	Y2-2222-50	SMALL A/C LINES & HOSES WITH DETROIT S-60 & R134A					
10	Y2-2222-51	SMALL A/C LINES & HOSES WITH DETROIT S-60 & R134A					
15	Y2-2255-10	CONDENSOR - INSTALLATION SMALL A/C SYSTEM					
15	Y2-2255-11	CONDENSOR - INSTALLATION SMALL A/C SYSTEM					
20	Y2-2225-00	DRIVER'S HEATER & DEFROSTER ASSY					
20	Y2-2225-01	DRIVER'S HEATER & DEFROSTER ASSY					
20	Y2-2225-02	DRIVER'S HEATER & DEFROSTER ASSY WITH MUX					
20	Y2-2230-00	DEFROSTER - INSTALLATION					
25	Y2-2208-10	REFRIGERANT SOLENOID VALVE					
30	Y2-2245-00	A/C COMPRESSOR 05G - INSTALLATION					
30	Y2-2245-03	A/C COMPRESSOR 05G - INSTALLATION - MUX					
30	Y2-2250-00	A/C COMPRESSOR ASSY 05G - THREE PORT					
30	Y2-2250-01	A/C COMPRESSOR ASSY 05G - TWIN PORT					
35	Y2-2222-15	A/C LINE REAR SECTION W/05G					
40	Y2-2270-00	RECEIVER TANK & FILTER DRYER					
45	Y2-2255-00	CONDENSOR - INSTALLATION LARGE SYSTEM					
50	Y2-2260-05	CONDENSOR FAN - INSTALLATION					
55	Y2-2205-00	HEATER & EVAPORATOR COIL - INSTALLATION					
55	Y2-2205-01	HEATER & EVAPORATOR COIL - INSTALLATION					

From Y-7046 To 6-8906		Date:07/2024	PAGE:Y2-2205-00
HEATER & EVAPORATOR COIL - INSTALLATION			

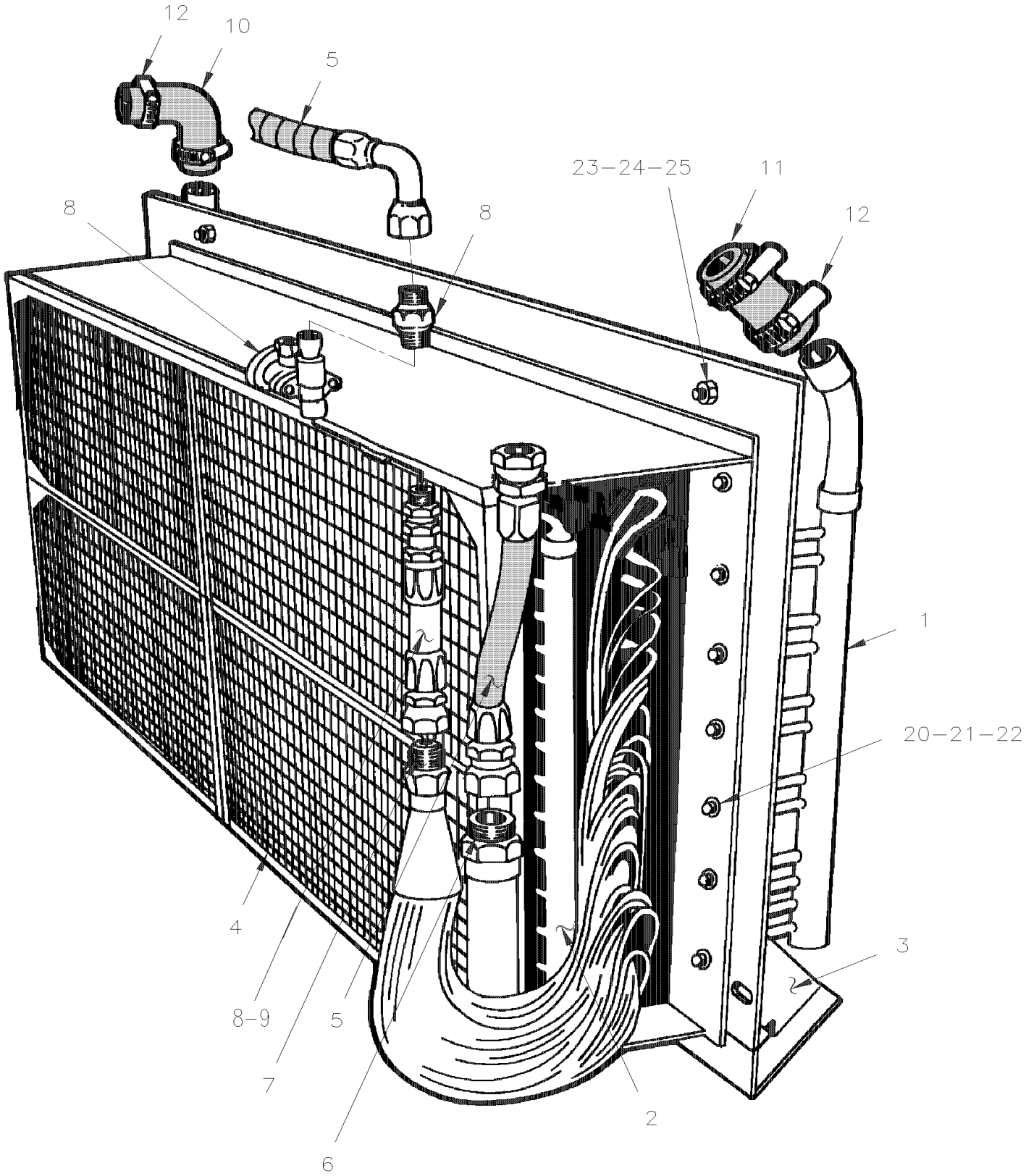

From Y-7046 To 6-8906		Date:07/2024	PAGE:Y2-2205-00

HEATER & EVAPORATOR COIL - INSTALLATION

Item#	Part	Description	XLII 45	XLII MTH40	XLII MTH45	XLII MTH45E	NOTES
1	19506148	COIL HEATER	1				
1	19506148	COIL HEATER To 6-8805		1	1	1	
NS	506337	RUBBER CHANNEL / 3/32" x 11/32" INT "U" SHAPE / ROUND C.T.L.	AR				
1	506337	RUBBER CHANNEL / 3/32" x 11/32" INT "U" SHAPE / ROUND C.T.L. To 6-8805		AR	AR	AR	
2	871070	COIL EVAPORATOR	1				
2	871070	COIL EVAPORATOR To 6-8805		1	1	1	
3	452096	SUPPORT ASSY / EVAPORATOR	1				
3	452096	SUPPORT ASSY / EVAPORATOR To 6-8805		1	1	1	
NS	371793	RUBBER 36" X 3/4" X 3/16" THICK	1				
3	371793	RUBBER 36" X 3/4" X 3/16" THICK To 6-8805		1	1	1	
NS	371735	RUBBER 4 3/4" X 2 7/8" X 3/16" THICK	2				
3	371735	RUBBER 4 3/4" X 2 7/8" X 3/16" THICK To 6-8805		1	1	1	
NS	506277	TAPE RUB ADH1 CC POL 1/2" x 3/4" x 15' / GREY 2520X	AR				
3	506277	TAPE RUB ADH1 CC POL 1/2" x 3/4" x 15' / GREY 2520X To 6-8805		AR	AR	AR	
4	**Y2-2220-00**	**UNDER FLOOR AIR DUCTING**					
5	**Y2-2270-00**	**RECEIVER TANK & FILTER DRYER**					
6	501803	O-RING / ORS FITTING / #20 NEO	AR	AR	AR	AR	
NS	501829	O-RING / ORS FITTING / #12 NEO	AR	AR	AR	AR	
7	507209	O-RING .424 ID	1	1	1	1	
8	**Y2-2208-00**	**A/C EXPANSION VALVE**					
9	453072	TUBE STABILISATOR A/C PRESSURE	1				
9	453072	TUBE STABILISATOR A/C PRESSURE To 6-8905		1	1	1	
10	372131	ELBOW 90° REDUCER 1 1/8" I.D.W/3 1/4" x 1 3/8 I.D. W 5 1/4" C/C	1				
101	372131	ELBOW 90° REDUCER 1 1/8" I.D.W/3 1/4" x 1 3/8 I.D. W 5 1/4" C/C To 6-8805		1		1	
11	051383	HOSE / W/CENTRAL A/C SYSTEM / 1 3/8" I.D. X 150MM	1				
113	051383	HOSE / W/CENTRAL A/C SYSTEM / 1 3/8" I.D. X 150MM To 6-8805		1		1	
114	503392	. HOSE SILICONE 4PLY 1 3/8" I.D. x 4'	AR	AR	AR	AR	
12	504292	HOSE CLAMP / 1"5/16-2"1/4 SS / E.T. 28	4	4	4	4	
20	500386	SCREW MA RND PH #10-24x1/2 Z050	20	20	20	20	
21	500470	WASHER LO SPT .193x.334x.047 Z050	20	20	20	20	
22	500964	WASHER FL .203x.500x.047 Z050	20	20	20	20	
23	500044	SCREW CAP HEX 3/8-24x3/4 G5 Z050	2	2	2	2	
24	500478	WASHER LO SPT .380x.683x.094 Z050	AR	AR	AR	AR	
25	500444	WASHER FL .406x.812x.065 Z050	2	2	2	2	

From 6-8806 To 8-9339		Date:07/2024	PAGE:Y2-2205-01
HEATER & EVAPORATOR COIL - INSTALLATION			

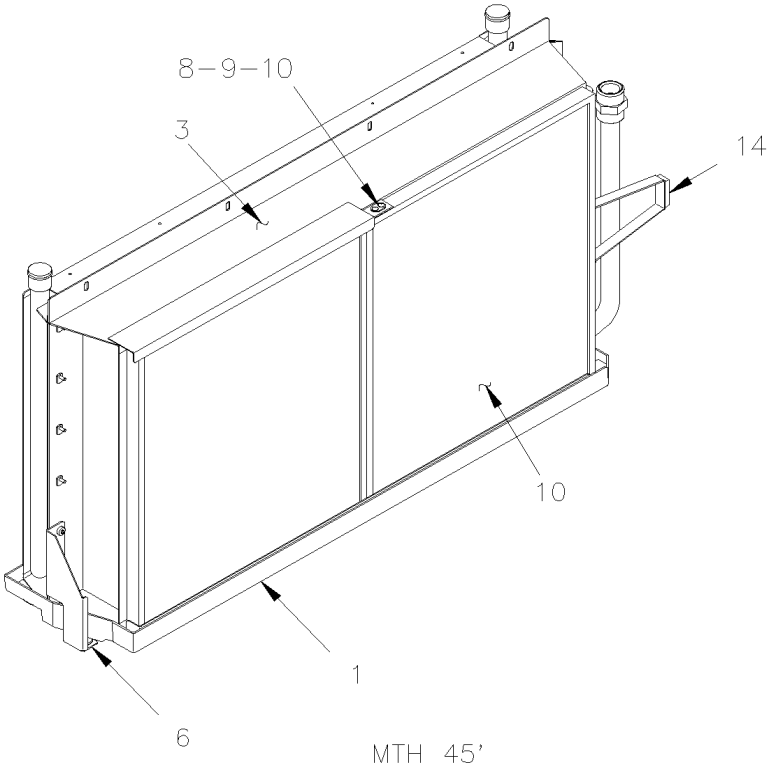

MTH 45'

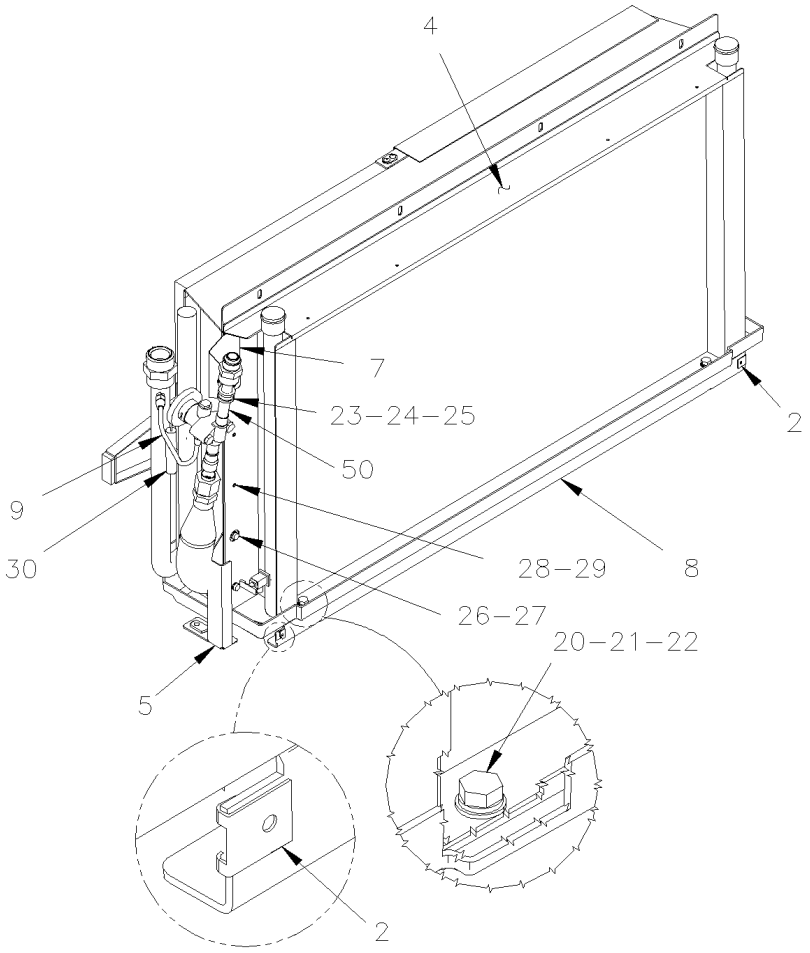

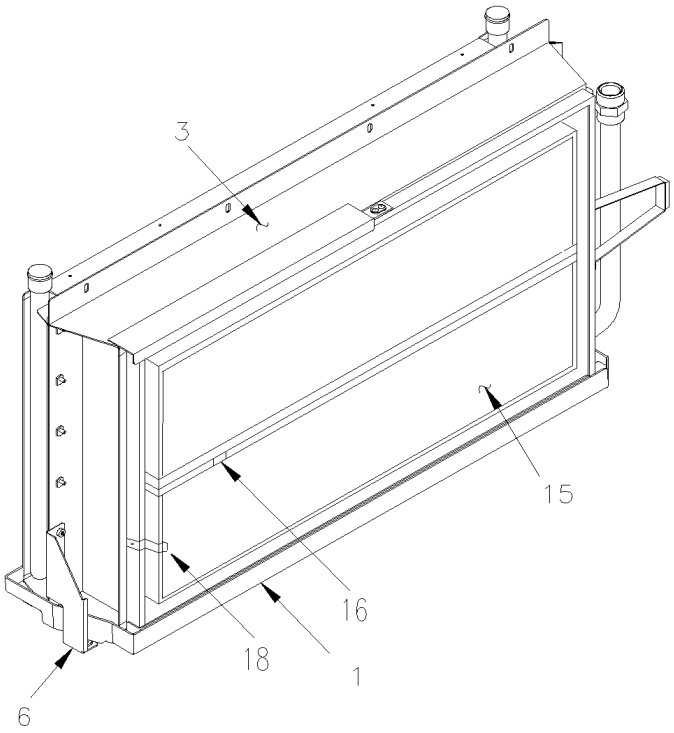

MTH 40' & MTH 45' ENT.

From 6-8806 To 8-9339		Date:07/2024	PAGE:Y2-2205-01

HEATER & EVAPORATOR COIL - INSTALLATION

Item#	Part	Description	XLII 45	XLII MTH40	XLII MTH45	XLII MTH45E	NOTES
1	453994	DRAIN PAN		1	1	1	
2	481249	NUT		2	2	2	
3	950390	COIL EVAPORATOR		1	1	1	
. NS	501829	. O-RING / ORS FITTING / #12 NEO		1	1	1	
. NS	501803	. O-RING / ORS FITTING / #20 NEO		1	1	1	
4	871372	COIL HEATER		1	1	1	
5	453983	SUPPORT EVAPORATOR / FORWARD		1	1	1	
6	453984	SUPPORT EVAPORATOR / BACKWARD		1	1	1	
7	454257	SUPPORT VALVE EXPANSION		1	1	1	
8	453982	SUPPORT HEATER CORE		1	1	1	
9	454256	TUBE STABILISATOR A/C PRESSURE		1	1	1	
10	374150P	FILTER ASSY			1		
. NS	871379	. FILTER 1" x 21" x 19"			2		
. NS	284439	. PLATE, STRAP RETAINING / OBLONG 16.5MM x 25.4MM W/2 HOLES			2		
. NS	379060	. HANDLE 20" x 6"			1		
11	871379	. FILTER 1" x 21" x 19"			2		
11	284439	. PLATE, STRAP RETAINING / OBLONG 16.5MM x 25.4MM W/2 HOLES			4		
12	504379	. RIVET POP DOME OE 3/16x1/4 SS			AR		
12	505507	. STRAP NYLON 1" WIDE / S.L.			AR		
13	504340	. RIVET POP DOME OE 1/8x3/16 SS			AR		
NS	506040	. TAPE RUB ADH1 CC EPDM 5/16" x 3/4" x 25' / BLACK OR GREY 144X			AR		
14	372910	. HANDLE 6" x 6"			1		
15	871383	FILTER 1" x 38" x 10 1/2"		2		2	
16	374231	SLIDING GUIDE 55MM		1		1	
17	374228	HANDLE UPPER W/RETAINER SLOT		1		1	
18	374232	SUPPORT LOWER GUIDE		1		1	
20	502780	SCREW CAP HEX M8-1.25x25 SS BK		1	1	1	
21	5001341	WASHER FL 8.4x17.0x1.6 SS		1	1	1	
23	952629	CLAMP / 5/8" I.D.		1	1	1	
24	500588	SCREW CAP HEX M4-0.7x20 G8.8 Z050		1	1	1	
25	500964	WASHER FL .203x.500x.047 Z050		1	1	1	
26	955269	SCREW CAP HEX M6-1.0x12 G8.8 ZG603		6	6	6	
27	502573	WASHER FL 6.4x12.5x1.6 SS		4	4	4	
28	500510	SCREW MA BDG PH #10-32x3/4 SS EMN		8	8	8	
29	500914	WASHER LO SPT .193x.334x.047 N500		8	8	8	
30	680091	TAPE INSULATING / 1/8" x 2" x 30' / BLACK PT-1		1	1	1	
50	**Y2-2208-00**	**A/C EXPANSION VALVE**	1	1	1	1	
NS	504340	RIVET POP DOME OE 1/8x3/16 SS		AR		AR	

From Y-7046 To 4-8205		Date:07/2024	PAGE:Y2-2206-00
WATER PUMP #871052 & #871204			

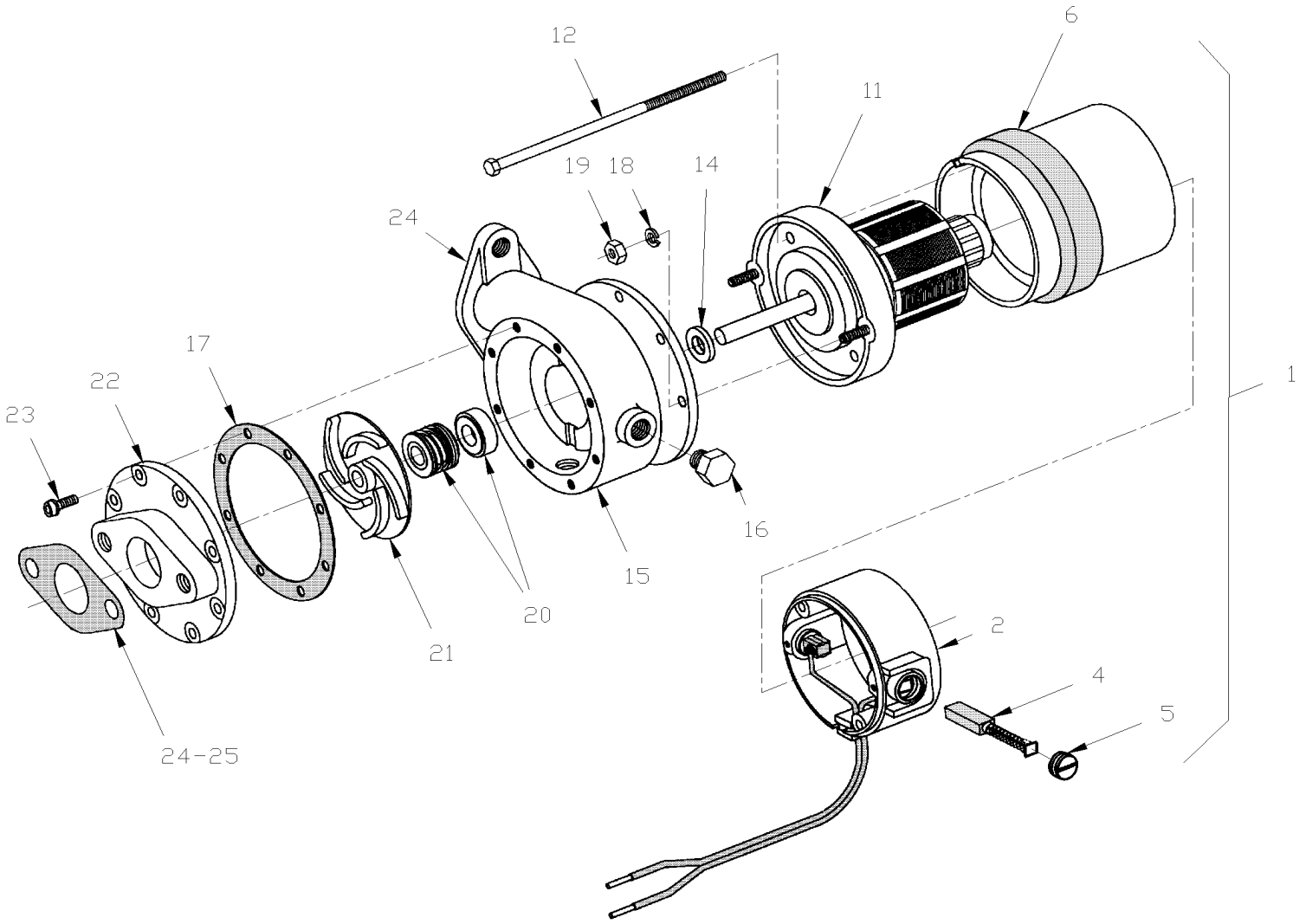

From Y-7046 To 4-8205		Date:07/2024	PAGE:Y2-2206-00

WATER PUMP #871052 & #871204

Item#	Part	Description	XLII 45	XLII MTH40	XLII MTH45	XLII MTH45E	NOTES
	372536	PUMP WATER ASSY W/CONNECTORS, RUBBER ADH &		1	1	1	A
NS	504026	. HOSE CLAMP / 2"13/16-3"3/4 SS / HS-52		2	2	2	
NS	506728	. TAPE RUB ADH1 NEO 1/4" x 3/4" x 10' / BLACK		AR	AR	AR	
NS	373222	. PUMP WATER ASSY W/CONNECTORS	1				B
NS	561566	. . CONNECTOR / WEATHER PACK / PH 2C / BLACK / PED 12010973	1				
NS	561568	. . PIN TERMINAL / 16-14 / PED 12089305	2				
NS	561786	. . CABLE SEAL / GRAY / PED 15324980	2				
	871204	. . WATER PUMP ASSY / 24V / (31726)	1	1	1	1	R
1		. . . MOTOR ASSY (28538)	1	1	1	1	
2	N.S.P.	. . . HEAD ASSY (28884)	1	1	1	1	2
2	N.S.S.	. . . . BRUSH HOLDER	2	2	2	2	1
4	871062	. . . BRUSH	2	2	2	2	
5	871063	. . . CAP BRUSH	2	2	2	2	
6	N.S.P.	. . . STATOR ASSY (28883)	1	1	1	1	2
11	N.S.P.	. . . ARMATURE ADAPTOR ASSY (28882)	1	1	1	1	2
11	N.S.S.	. . . BEARING	2	2	2	2	1
12	N.S.S.	. . . STUD CASE #10-32 X 5"	2	2	2	2	1
14	870440	. . SLINGER	1	1	1	1	
15	N.S.P.	. . CARRIER / PUMP (21586)	1	1	1	1	2
16	501303	. . PLUG SQUARE HEAD / PIPE FITTING / 1/8NPT-M BR	2	2	2	2	
17	870439	. . GASKET / CARRIER To 1-7409	1	1	1	1	
17	871205	. . GASKET / CARRIER From 1-7410	1	1	1	1	
18	500470	. . WASHER LO SPT .193x.334x.047 Z050	2	2	2	2	
19	500700	. . NUT HEX #10-32 Z050	2	2	2	2	
20	870437	. . KIT SEAL To 1-7409	1	1	1	1	
20	871310	. . KIT SEAL From 1-7410	1	1	1	1	
21	870436	. . IMPELLER	1	1	1	1	
22	N.S.P.	. . FLANGE ADAPTOR (21634)	1	1	1	1	2
23	N.S.P.	. . SCREW #8-32 X 1/2 / BRASS	8	8	8	8	2
24	870441	GASKET PUMP INLET & OUTLET	2	2	2	2	
25	871207	QUAD RING	1	1	1	1	
		A) W/SMALL SYSTEM / UNDER DRIVER'S FLOOR					
		B) W/LARGE SYSTEM / IN EVAPORATOR COMPARTMENT					
		R) THOSE PUMP MAY BE SUPPERSEEDED BY KIT #374027 WITH "SEALLESS PUMP" SEE PAGE Y2-2206-99					
		1) NOT SOLD SEPARATELY					
		2) NOT SOLD BY PREVOST (SEE MANUFACTURING PART NUMBER AT END OF DESCRIPTION LINE)					

From 4-8206 To 8-9339		Date:07/2024	PAGE:Y2-2206-01
WATER PUMP #871342 SEALLESS			

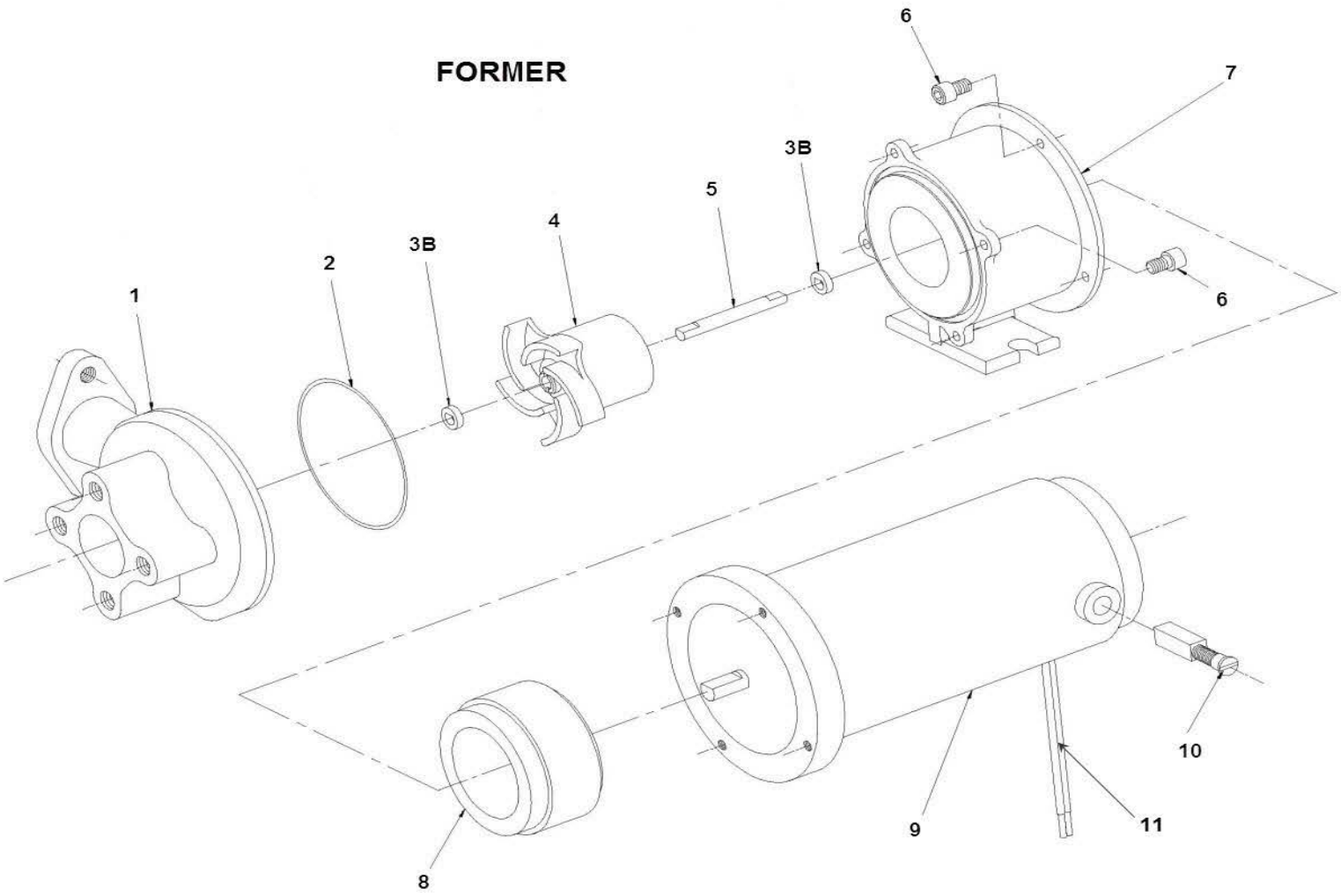

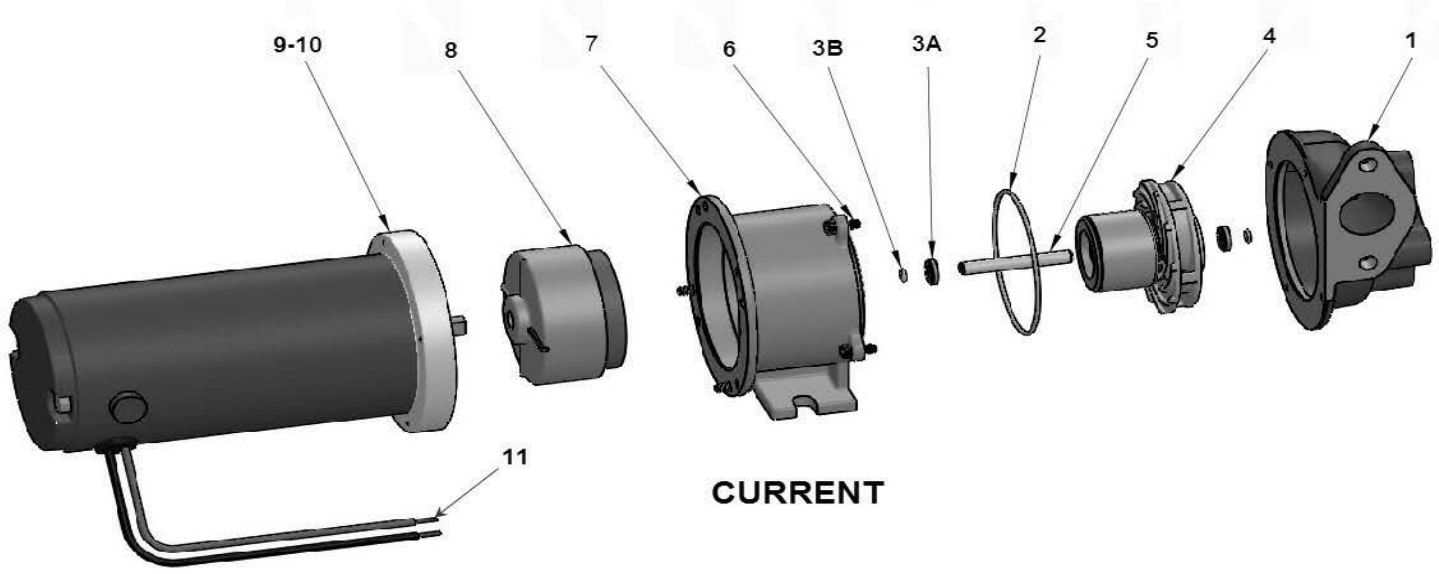

From 4-8206 To 8-9339		Date:07/2024	PAGE:Y2-2206-01
WATER PUMP #871342 SEALLESS			

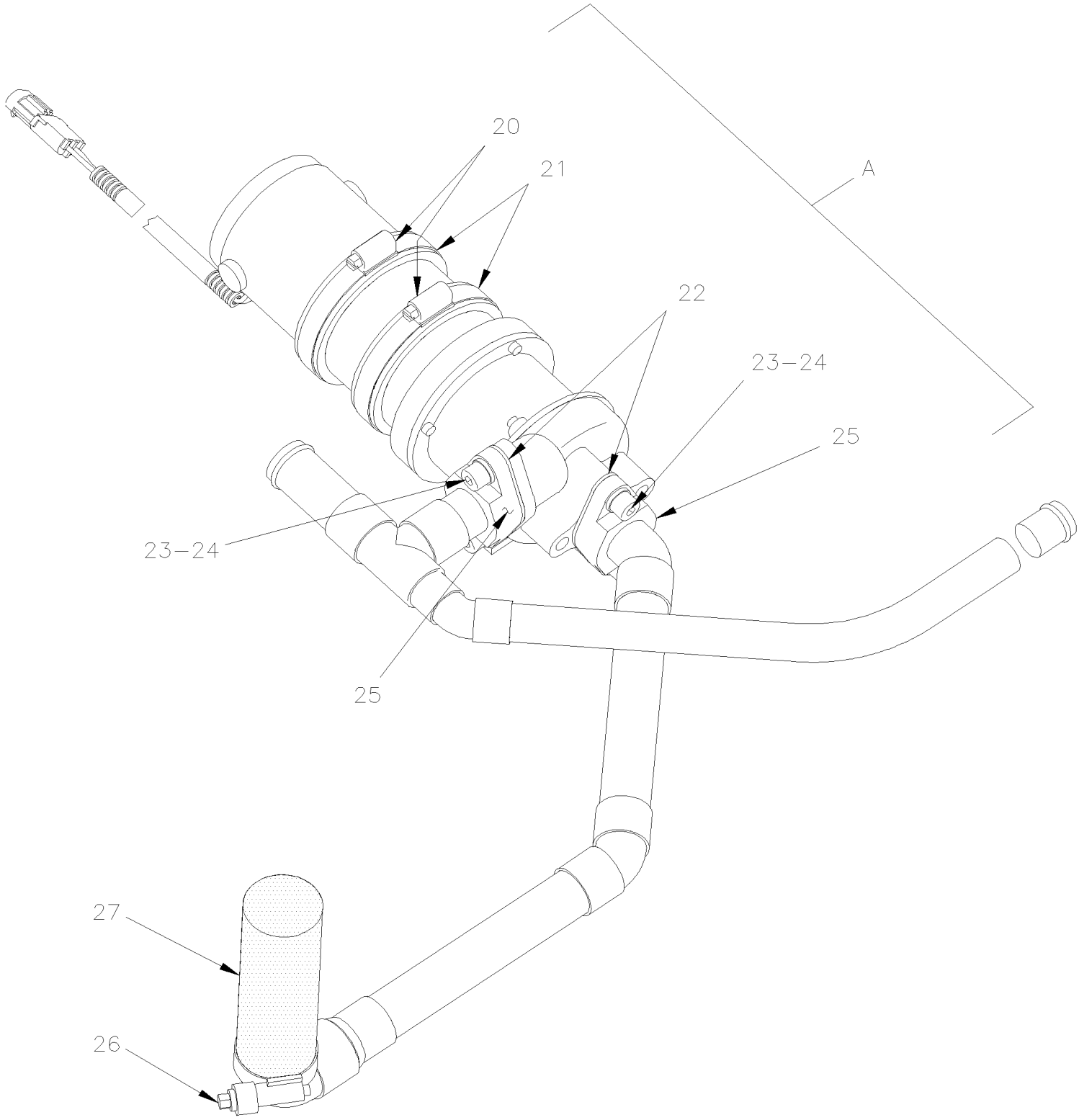

From 4-8206 To 8-9339		Date:07/2024	PAGE:Y2-2206-01

WATER PUMP #871342 SEALLESS

Item#	Part	Description	XLII 45	XLII MTH40	XLII MTH45	XLII MTH45E	NOTES
	374032	PUMP WATER ASSY WITH CONNECTOR / SEALLESS MODEL	1				
	374032	PUMP WATER ASSY WITH CONNECTOR / SEALLESS MODEL To 6-8805		1	1	1	
	871414	WATER PUMP ASSY / 24V / SEALLESS / "MP PUMPS"	1	1	1	1	A
	871342	. WATER PUMP ASSY / 24V / SEALLESS / "MP PUMPS"	1	1	1	1	
1	N.S.S.	. . HOUSING	1	1	1	1	1
2	871236	. . O-RING	1	1	1	1	
3A	870138	. . O-RING	2	2	2	2	C
3B	871239	. . WASHER SS	2	2	2	2	F
3B	Call order desk	. . WASHER THRUST	2	2	2	2	P C
4	871240	. . ROTOR ASSY	1	1	1	1	F
4	870117	. . ROTOR ASSY	1	1	1	1	C
5	871241	. . SHAFT SS	1	1	1	1	F
5	Call order desk	. . SHAFT SS	1	1	1	1	P C
6	G1094056	. . SCREW CAP HEXS 8-32x3/8	8	8	8	8	
7	G1094057	. . ADAPTOR	1	1	1	1	
8	871242	. . DRIVE MAGNET	1	1	1	1	
9	871322	. . MOTOR ASSY 24V	1	1	1	1	
10	871323	. . BRUSH	2	2	2	2	
11	561566	. CONNECTOR / WEATHER PACK / PH 2C / BLACK / PED 12010973	1	1	1	1	
NS	561568	. PIN TERMINAL / 16-14 / PED 12089305	2	2	2	2	
NS	561786	. CABLE SEAL / GRAY / PED 15324980	2	2	2	2	
20	504235	HOSE CLAMP / 3"9/16"-4"1/2 SS / HS-64 From 6-8806		2	2	2	
21	506728	TAPE RUB ADH1 NEO 1/4" x 3/4" x 10' / BLACK From 6-8806		AR	AR	AR	
22	870441	GASKET PUMP INLET & OUTLET From 6-8806		2	2	2	
23	5001580	SCREW CAP HEXS 3/8-16x7/8 From 6-8806		4	4	4	
24	500478	WASHER LO SPT .380x.683x.094 Z050 From 6-8806		4	4	4	
25	871206	FLANGE ADAPTOR / W/QUAD RING From 6-8806		2	2	2	
26	504657	HOSE CLAMP / 1"1/16-2" C.T. 9424 From 6-8806		1	1	1	
27	503392	HOSE SILICONE 4PLY 1 3/8" I.D. x 4' From 6-8806		AR	AR	AR	
A	Call order desk	PUMP WATER ASSY W/PIPE & CONNECTOR / SEALLESS MODEL From 6-8806		1	1	1	P
. NS	374864	. COPPER TUBE, OUTPUT ASSY From 6-8806		1	1	1	
. NS	374865	. COPPER TUBE, INPUT ASSY From 6-8806		1	1	1	
		A) THIS PUMP IS PACKAGING INDIVIDUALLY WITHOUT ELECTRICAL CONNECTORS					
		C) CURRENT					
		F) FORMER					
		1) NOT SOLD SEPARATELY					
		P) CALL ORDER DESK FOR SPECIFIC APPLICATION (V.I.N.)					

From Y-7046 To 6-8905		Date:07/2024	PAGE:871327
WATER PUMP / "ROTRON" 24 V "SPECIAL OPTION"			

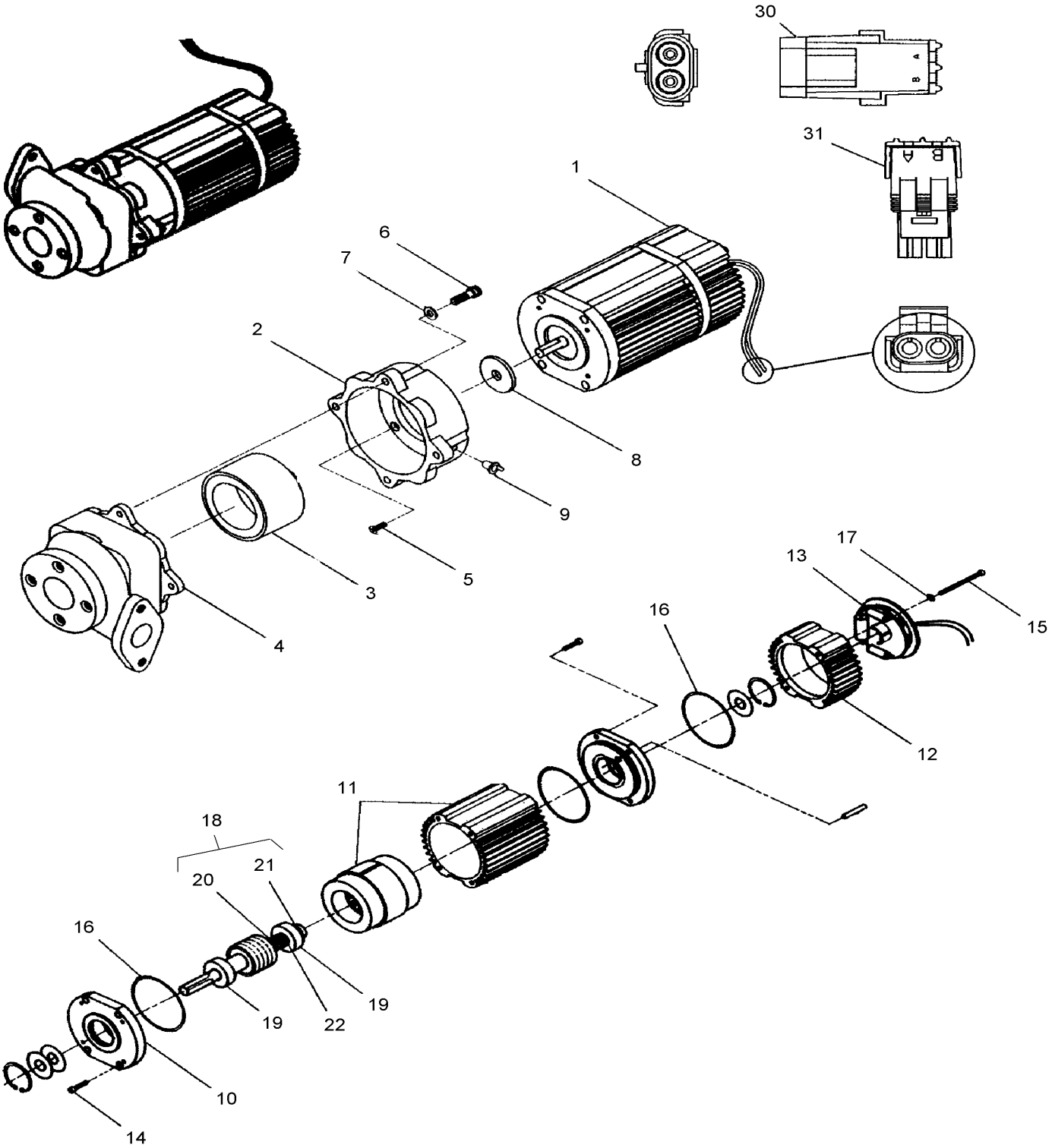

From Y-7046 To 6-8905		Date:07/2024	PAGE:871327

WATER PUMP / "ROTRON" 24 V "SPECIAL OPTION"

Item#	Part	Description	XLII 45	XLII MTH40	XLII MTH45	XLII MTH45E	NOTES
		WATER PUMP ASSY / 24V / SEAL & BRUSHLESS	1	1	1	1	
1	N8881521	. MOTOR 24 V	1	1	1	1	
1	G1017727	. MOTOR 24V	1	1	1	1	
1	N8896644	. MOTOR 24V	1	1	1	1	
2	N8881522	. CONNECTING HOUSING	1	1	1	1	
3	N8881523	. DRIVE MAGNET	1	1	1	1	
3	G1017729	. DRIVE MAGNET	1	1	1	1	
4	N8881524	. SEALLESS PUMP HOUSING	1	1	1	1	
4	G1017730	. PUMP ASSY	1	1	1	1	
5	N8881525	. SCREW #8-32 X 0.50	4	4	4	4	
6	N8881526	. SCREW 1/4-20 X 0.88	4	4	4	4	
7	N8881527	. WASHER	4	4	4	4	
7	G1017733	. WASHER	1	1	1	1	
8	N8881528	. WASHER	1	1	1	1	
8	G1014848	. WASHER	1	1	1	1	
9	N8881529	. PLUG	1	1	1	1	
9	195971	. PLUG, TREATED	1	1	1	1	
10	G1017712	. ENDBELL	1	1	1	1	
11	N8881530	. FRONT HOUSING	1	1	1	1	
12	G1018142	. REAR HOUSING	1	1	1	1	
13	G1017716	. ENCODER 24 V	1	1	1	1	
14	G1017717	. SCREW #8-32 X 0.75	4	4	4	4	
15	G1017718	. SCREW #8-32 X 2.25	2	2	2	2	
16	G1017719	. O-RING	2	2	2	2	
17	G1017720	. WASHER #8	2	2	2	2	
18	G1017714	. SHAFT AND ROTOR ASM	1	1	1	1	
19	G1017721	. . BEARING	2	2	2	2	
19	19503536	. . BEARING	2	2	2	2	
19	N8881544	. . BEARING	2	2	2	2	
20	G1017723	. . SPRING	1	1	1	1	
21	G1017724	. . SNAP RING	1	1	1	1	
22	G1017725	. . SHIM BEARING	1	1	1	1	
30	561605	. CONNECTOR / WEATHER PACK / PH 1C / BLACK / PED 12010996	1	1	1	1	
31	561690	. CONNECTOR / WEATHER PACK / SH 2C / BLACK / PED 12015792	1	1	1	1	

From Y-7046 To 8-9339		Date:07/2024	PAGE:Y2-2206-50
WATER PUMP #871032			

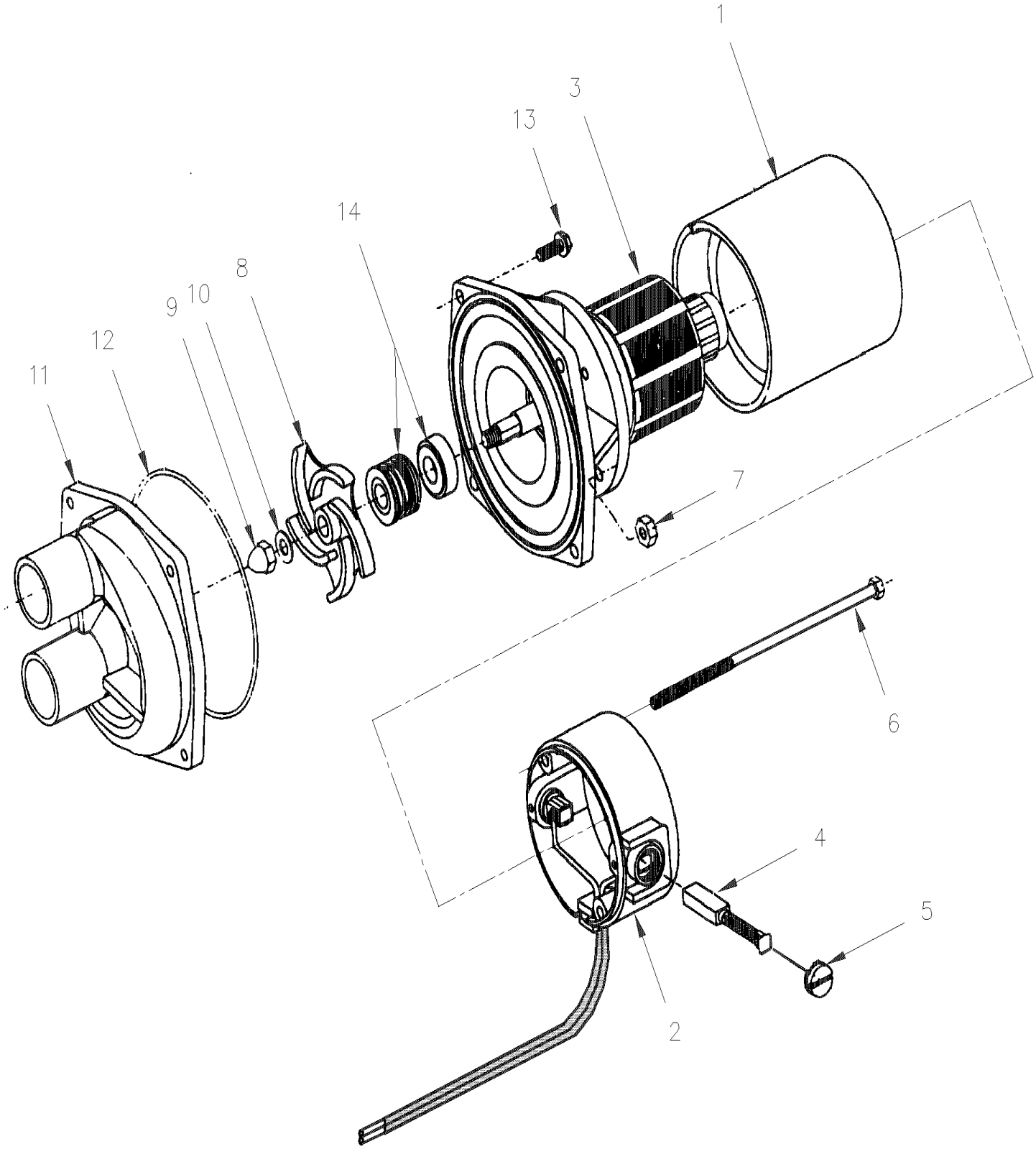

From Y-7046 To 8-9339		Date:07/2024	PAGE:Y2-2206-50

WATER PUMP #871032

Item#	Part	Description	XLII 45	XLII MTH40	XLII MTH45	XLII MTH45E	NOTES
	064174	PUMP WATER ASSY WITH CONNECTOR		1	1	1	
NS	561566	. CONNECTOR / WEATHER PACK / PH 2C / BLACK / PED 12010973		1	1	1	
NS	561568	. PIN TERMINAL / 16-14 / PED 12089305		1	1	1	
NS	561786	. CABLE SEAL / GRAY / PED 15324980		2	2	2	
NS	871032	. WATER PUMP ASSY / 24V / (29232)		1	1	1	
1	N.S.P.	. . STATOR ASSY (28840)		1	1	1	2
2	N.S.P.	. . HEAD ASSY (28836)		1	1	1	2
2	N.S.S.	. . BRUSH HOLDER		2	2	2	1
3	N.S.P.	. . ARMATURE ADAPTOR ASSY (28839)		1	1	1	2
3	N.S.S.	. . . BEARING		2	2	2	1
4	871062	. . BRUSH		2	2	2	
5	871063	. . CAP BRUSH		2	2	2	
6	N.S.P.	. . STUD CASE #10-32 X 5"		2	2	2	2
NS	500470	. . WASHER LO SPT .193x.334x.047 Z050		2	2	2	
7	500700	. . NUT HEX #10-32 Z050		2	2	2	
8	871066	. IMPELLER		1	1	1	
10	871068	. GASKET PUMP		2	2	2	
11	871047	. COVER		1	1	1	
12	871065	. O-RING		1	1	1	
13	N.S.P.	. SCREW #8-32 X 1/2 / BRASS		8	8	8	2
14	871064	. KIT SEAL		1	1	1	
14	N.S.P.	. MOTOR ASSY / (28748)		1	1	1	2
15	482616	SUPPORT WATER PUMP		1	1	1	
		1) NOT SOLD SEPARATELY					
		2) NOT SOLD BY PREVOST (SEE MANUFACTURING PART NUMBER AT END OF DESCRIPTION LINE)					

From Y-7046 To 8-9339		Date:07/2024	PAGE:Y2-2206-99
WATER PUMP #871342 SEALLESS "RETROFIT"			

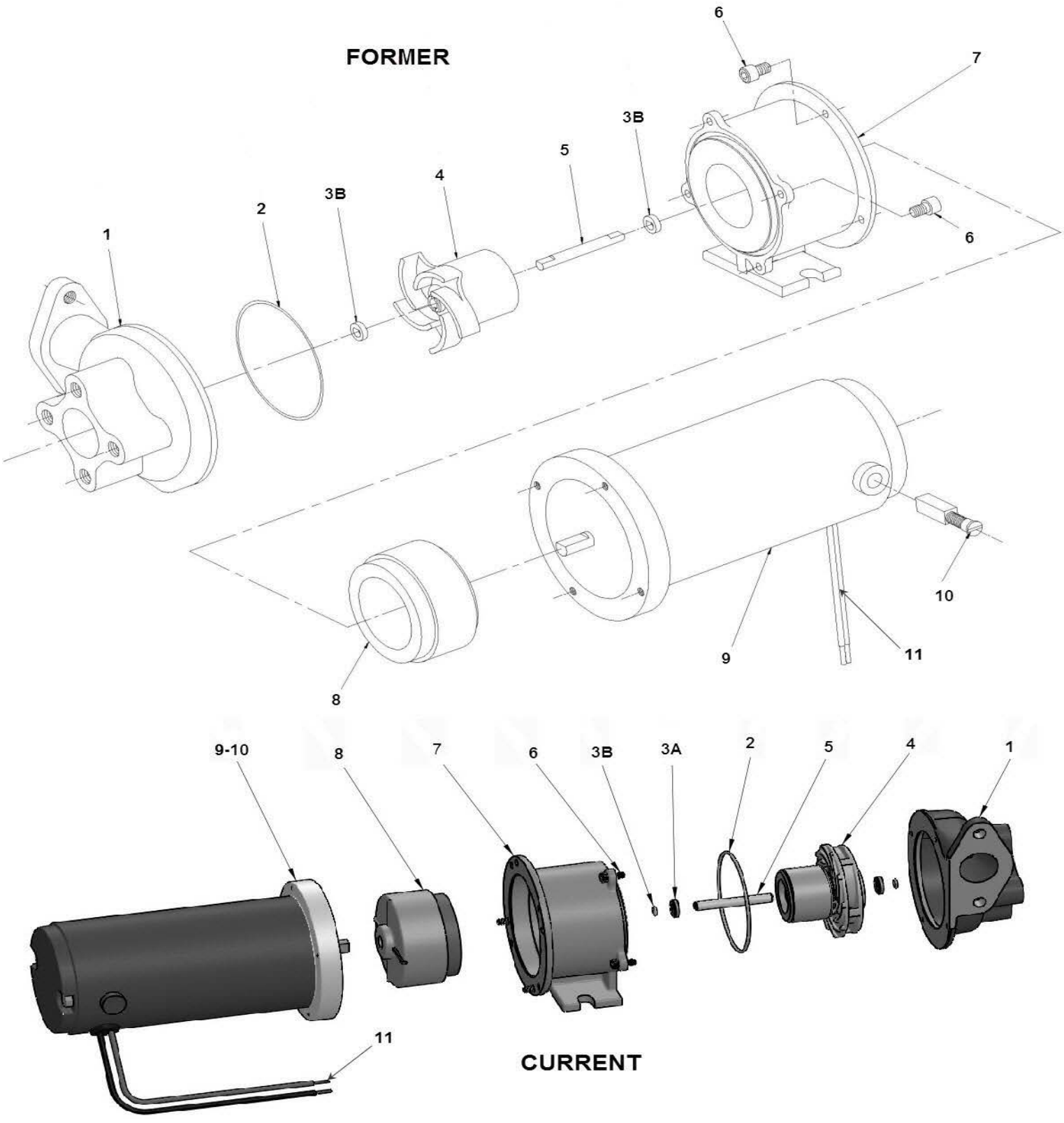

From Y-7046 To 8-9339		Date:07/2024	PAGE:Y2-2206-99

WATER PUMP #871342 SEALLESS "RETROFIT"

Item#	Part	Description	XLII 45	XLII MTH40	XLII MTH45	XLII MTH45E	NOTES
	374032	PUMP WATER ASSY WITH CONNECTOR / SEALLESS MODEL	1	1	1	1	
	871414	. WATER PUMP ASSY / 24V / SEALLESS / "MP PUMPS"	1	1	1	1	B
	871342	. WATER PUMP ASSY / 24V / SEALLESS / "MP PUMPS"	1	1	1	1	
1	N.S.S.	. . HOUSING	1	1	1	1	1
2	871236	. . O-RING	1	1	1	1	
3A	870138	. . O-RING	2	2	2	2	C
3B	871239	. . WASHER SS	2	2	2	2	F
3B	Call order desk	. . WASHER THRUST	2	2	2	2	P C
4	871240	. . ROTOR ASSY	1	1	1	1	F
4	870117	. . ROTOR ASSY	1	1	1	1	C
5	871241	. . SHAFT SS	1	1	1	1	F
5	Call order desk	. . SHAFT SS	1	1	1	1	P C
6	G1094056	. . SCREW CAP HEXS 8-32x3/8	8	8	8	8	
7	G1094057	. . ADAPTOR	1	1	1	1	
8	871242	. . DRIVE MAGNET	1	1	1	1	
9	871322	. . MOTOR ASSY 24V	1	1	1	1	
10	871323	. . . BRUSH	2	2	2	2	
11	561566	. CONNECTOR / WEATHER PACK / PH 2C / BLACK / PED 12010973	1	1	1	1	
11	561568	. PIN TERMINAL / 16-14 / PED 12089305	2	2	2	2	
11	561786	. CABLE SEAL / GRAY / PED 15324980	2	2	2	2	
NS	374027	KIT, RETROFIT SEALLESS WATER PUMP To 4-8205	1	1	1	1	
NS	374053	WATER PUMP ASSY W/SUPPORT / W/"XL" / MTH To 4-8205		1	1	1	A
. NS	IS-03044	. SEE INSTRUCTION SHEET To 4-8205		1	1	1	A
		A) WITH SMALL A/C SYSTEM					
		B) BATHIS PUMP IS PACKAGING INDIVIDUALLY WITHOUT ELECTRICAL CONNECTORS					
		C) CURRENT					
		F) FORMER					
		1) NOT SOLD SEPARATELY					
		P) CALL ORDER DESK FOR SPECIFIC APPLICATION (V.I.N.)					

From Y-7046 To 2-7881		Date:07/2024	PAGE:Y2-2207-00
WATER VALVE - W/MAIN HEATER			

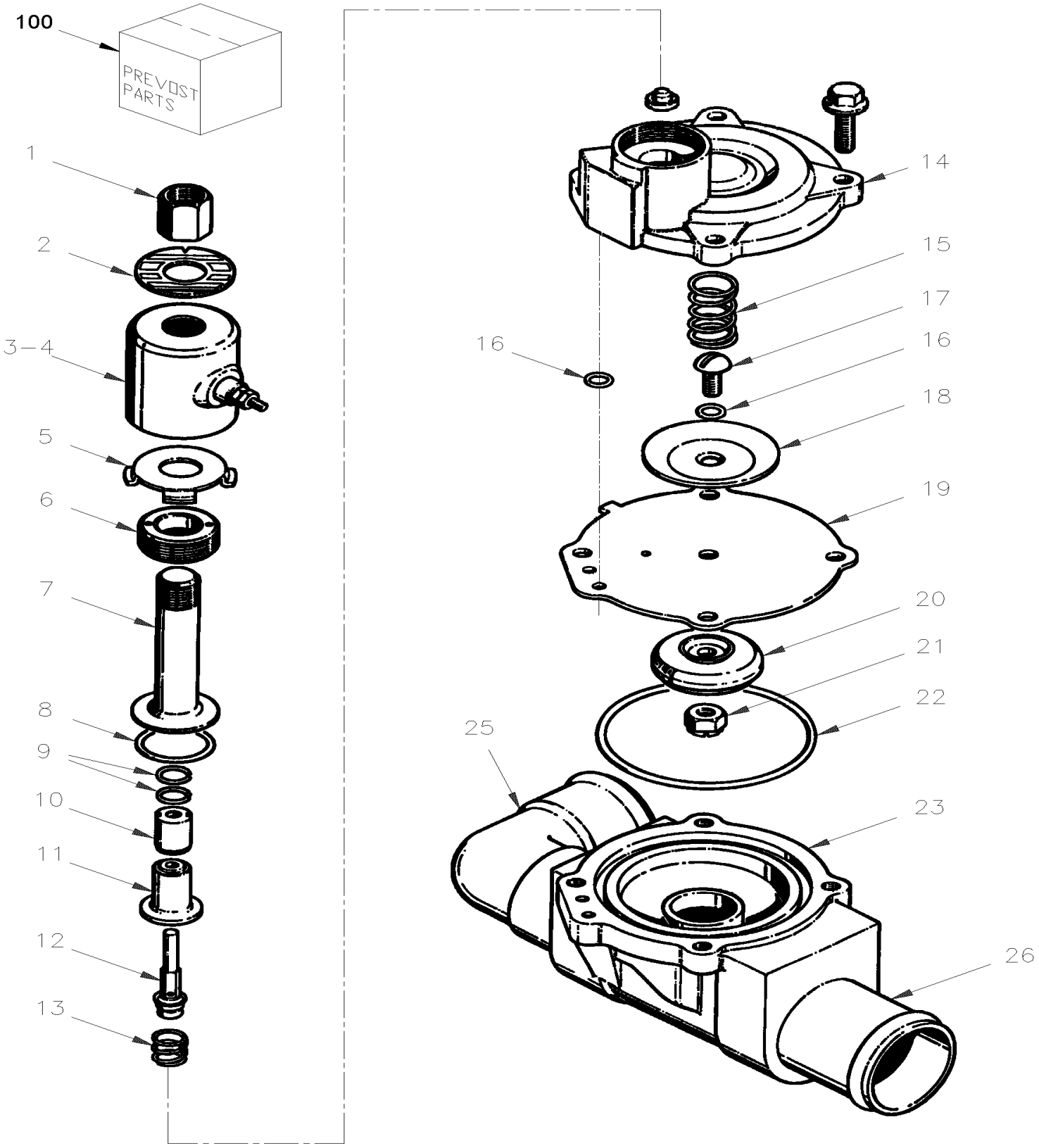

From Y-7046 To 2-7881		Date:07/2024	PAGE:Y2-2207-00

WATER VALVE - W/MAIN HEATER

Item#	Part	Description	XLII 45	XLII MTH40	XLII MTH45	XLII MTH45E	NOTES
	371798	WATER VALVE ASSY	1	1	1	1	B
NS	870873	. VALVE WATER / 24 V	1	1	1	1	B
	374669	. VALVE WATER / 24 V / ASSY	1	1	1	1	B
1	870866	. . NUT, SKINNER VALVE COIL MOUNT	1	1	1	1	
2	N.S.S.	. . NAMEPLATE	1	1	1	1	1
3	N.S.S.	. . HOUSING	1	1	1	1	1
4	870865	. . COIL 24V	1	1	1	1	
5	N.S.S.	. . FLUX PLATE	1	1	1	1	1
6	N.S.S.	. . FLANGE	1	1	1	1	1
7	870968	. . SLEEVE ASSY	1	1	1	1	
8	870853	. . SEAL FLANGE	1	1	1	1	
9	870854	. . SNUBBER	1	1	1	1	
10	870855	. . PLUNGER ASSY	1	1	1	1	
11	N.S.S.	. . STOP	1	1	1	1	1
12	870852	. . SEAL RETAINER	1	1	1	1	
13	870851	. . SPRING	1	1	1	1	
14	N.S.S.	. . COVER	1	1	1	1	1
15	870856	. . SPRING	1	1	1	1	
16	870857	. . O-RING	1	1	1	1	
17	N.S.S.	. . SCREW	1	1	1	1	1
18	N.S.S.	. . SUPPORT PLATE	1	1	1	1	1
19	870859	. . DIAPHRAGM	1	1	1	1	
20	870860	. . SEAL	1	1	1	1	
21	N.S.S.	. . LOCK NUT	1	1	1	1	1
22	870822	. . O-RING	1	1	1	1	
23	N.S.S.	. . BODY	1	1	1	1	1
26	371725	SUPPORT / WATER VALVE	1	1	1	1	
50	**374830**	**WATER VALVE ASSY**	1	1	1	1	
100	870876	KIT REPAIR	1	1	1	1	A
. NS	870875	. DIAPHRAGM	1	1	1	1	A
		A) THIS KIT INCLUDES ITEMS #8,9,10,12,13,15,16,19,20,22					
		B) 870873 NO LONGER AVAILABLE REPLACE BY 374830					
		1) NOT SOLD SEPARATELY					

From Y-7046 To 2-7881		Date:07/2024	PAGE:374830
WATER VALVE ASSY			

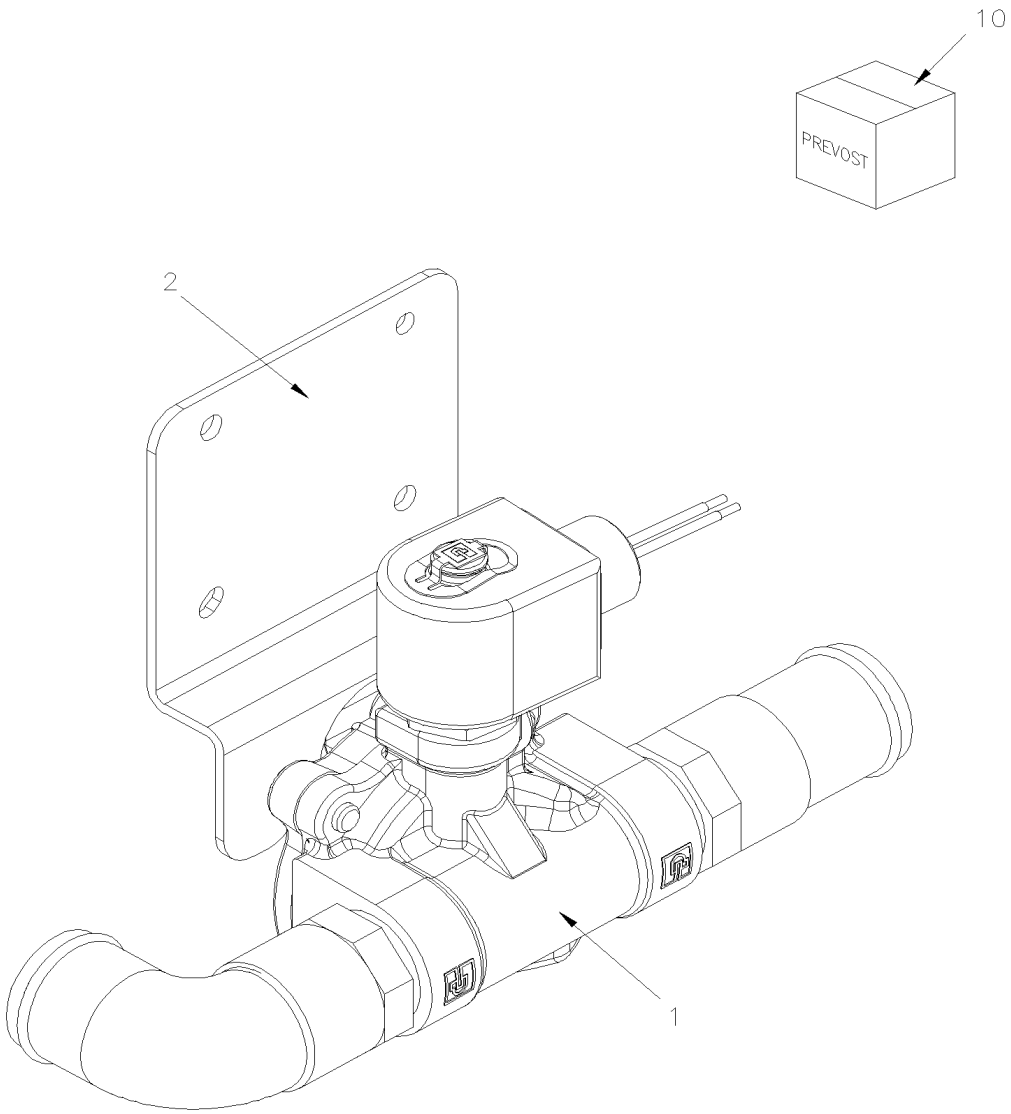

From Y-7046 To 2-7881		Date:07/2024	PAGE:374830

WATER VALVE ASSY

Item#	Part	Description	XLII 45	XLII MTH40	XLII MTH45	XLII MTH45E	NOTES
1	871457	VALVE WATER ASSY / 24 V	1	1	1	1	
. NS	871461	. COIL	1	1	1	1	
2	379677	SUPPORT / WATER VALVE	1	1	1	1	
10	871461	COIL	1	1	1	1	

From 2-7822 To 8-9339		Date:07/2024	PAGE:Y2-2207-01
WATER VALVE - W/2 WAYS			

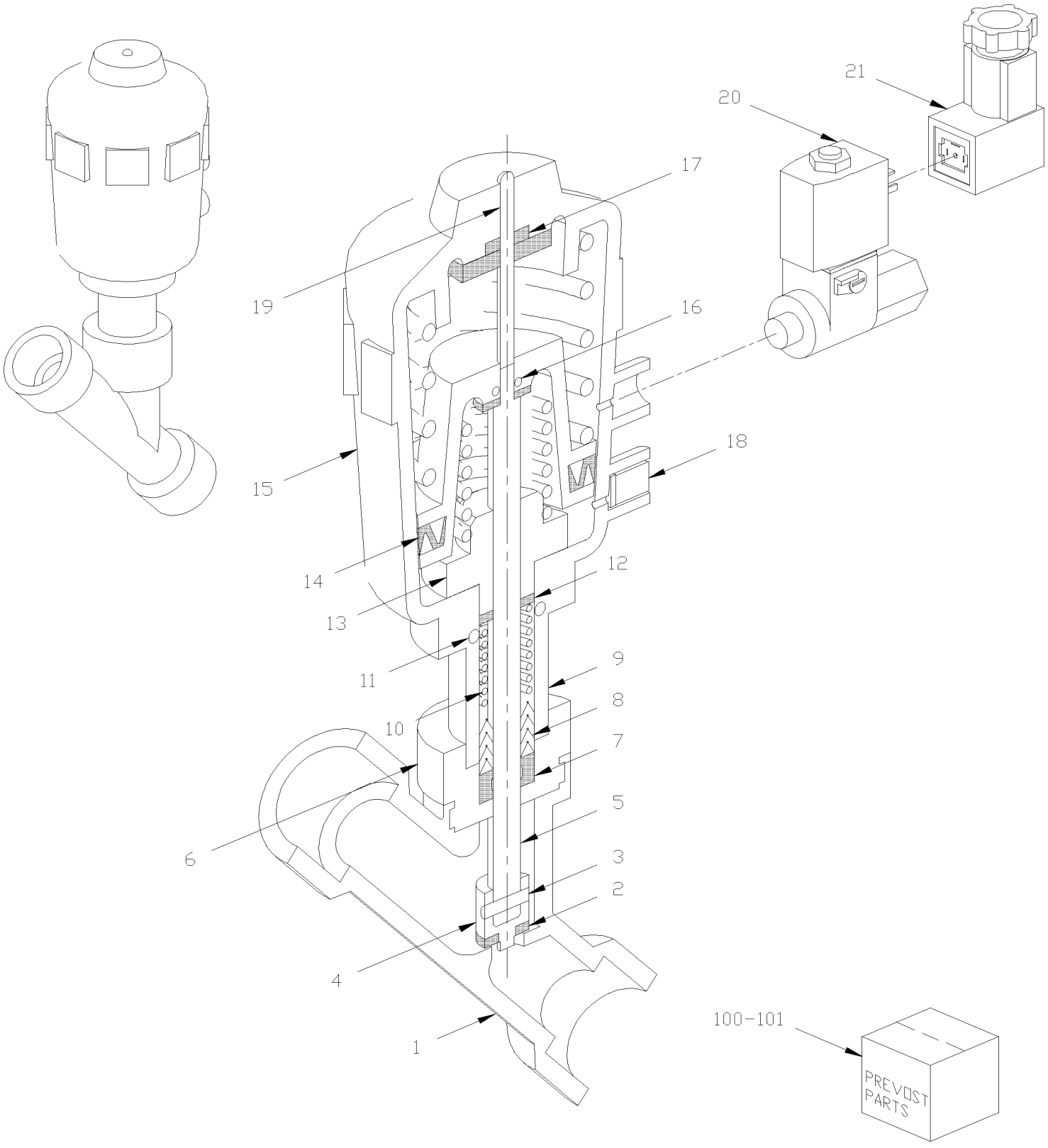

From 2-7822 To 8-9339		Date:07/2024	PAGE:Y2-2207-01
WATER VALVE - W/2 WAYS			

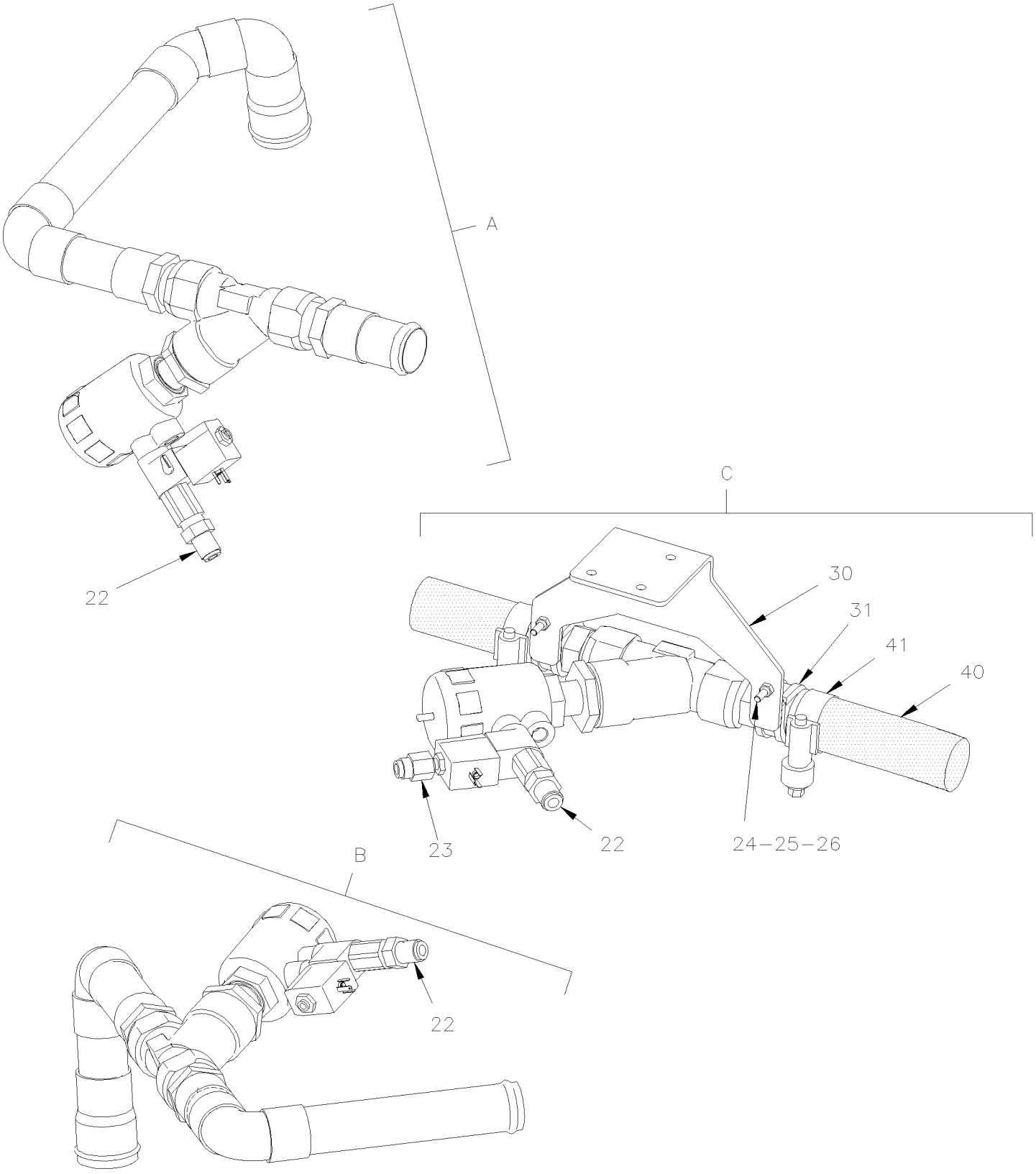

From 2-7822 To 8-9339		Date:07/2024	PAGE:Y2-2207-01

WATER VALVE - W/2 WAYS

Item#	Part	Description	XLII 45	XLII MTH40	XLII MTH45	XLII MTH45E	NOTES
	871252	. WATER VALVE ASSY / 24V	1	1	1	1	
1	N.S.S.	. . BODY	1	1	1	1	1
2	N.S.S.	. . SEAL	1	1	1	1	1
3	N.S.S.	. . PIN	1	1	1	1	1
4	N.S.S.	. . SWIVEL PLATE	1	1	1	1	1
5	N.S.S.	. . SPINDLE	1	1	1	1	1
6	N.S.S.	. . NIPPLE	1	1	1	1	1
7	N.S.S.	. . WIPER	1	1	1	1	1
8	N.S.S.	. . V-SEAL	3	3	3	3	1
9	N.S.S.	. . TUBE	1	1	1	1	1
10	N.S.S.	. . SPRING	1	1	1	1	1
11	N.S.S.	. . O-RING	1	1	1	1	1
12	N.S.S.	. . LIP SEAL	1	1	1	1	1
13	N.S.S.	. . SCREW	1	1	1	1	1
14	N.S.S.	. . CYLINDER SEAL	1	1	1	1	1
15	N.S.S.	. . ACTUATOR CASING	1	1	1	1	1
16	N.S.S.	. . O-RING	1	1	1	1	1
17	N.S.S.	. . LIP SEAL	1	1	1	1	1
18	N.S.S.	. . CONE GLAND 1/8"	2	2	2	2	1
19	N.S.S.	. . POSITION INDICATOR	1	1	1	1	1
20	871313	. SOLENOID VALVE 24V 4 WATTS 1/8SPT X 1/4NPT	1	1	1	1	
. NS	871391	. . COIL 24V 4 WATTS	1	1	1	1	
21	563204	. CONNECTOR / SOCKET HOUSING ASSY 4C / BURKET 303148	1	1	1	1	
22	641332	MALE CONNECTOR / PUSH-IN FITTING / #4x1/4NPT-M BR	1	1	1	1	
23	642028	MALE CONNECTOR / PUSH-IN FITTING / 6MM x M5-0.8 BR	1	1	1	1	
24	500588	SCREW CAP HEX M4-0.7x20 G8.8 Z050	2	2	2	2	
25	500438	WASHER FL .187x.437x.050 Z050	2	2	2	2	
26	500540	SCREW TP CAP HEX 5/16x1/4 ZP	2	2	2	2	
30	374147	SUPPORT WATER VALVE From 6-8806		1	1	1	A
31	952635	CLAMP / 1" I.D.	2	2	2	2	
40	503684	HOSE SILICONE 1 PLY 7/8" I.D. x 100' / S.L.	AR	AR	AR	AR	
41	504646	HOSE CLAMP / 11/16"-1"1/4 / C.T. 9412	2	2	2	2	
100	871311	SEAL KIT / WATER SIDE	1	1	1	1	
101	871312	SEAL KIT / AIR PISTON SIDE	1	1	1	1	
A	373864	WATER VALVE ASSY W/PIPE From 2-7882 To 6-8805		1	1	1	
B	373889	WATER VALVE ASSY W/PIPE From 2-7876	1				
C	Call order desk	WATER VALVE ASSY W/PIPE & SUPPORT From 6-8806		1	1	1	P
		A) IN SPARE COMPARTMENT-LOCALISER					
		1) NOT SOLD SEPARATELY					

From 2-7822 To 8-9339		Date:07/2024	PAGE:Y2-2207-01

WATER VALVE - W/2 WAYS

Item#	Part	Description	XLII 45	XLII MTH40	XLII MTH45	XLII MTH45E	NOTES
		P) CALL ORDER DESK FOR SPECIFIC APPLICATION (V.I.N.)					

From 6-8806 To 8-9339		Date:07/2024	PAGE:Y2-2207-02
WATER VALVE - W/3 WAYS BY-PASS			

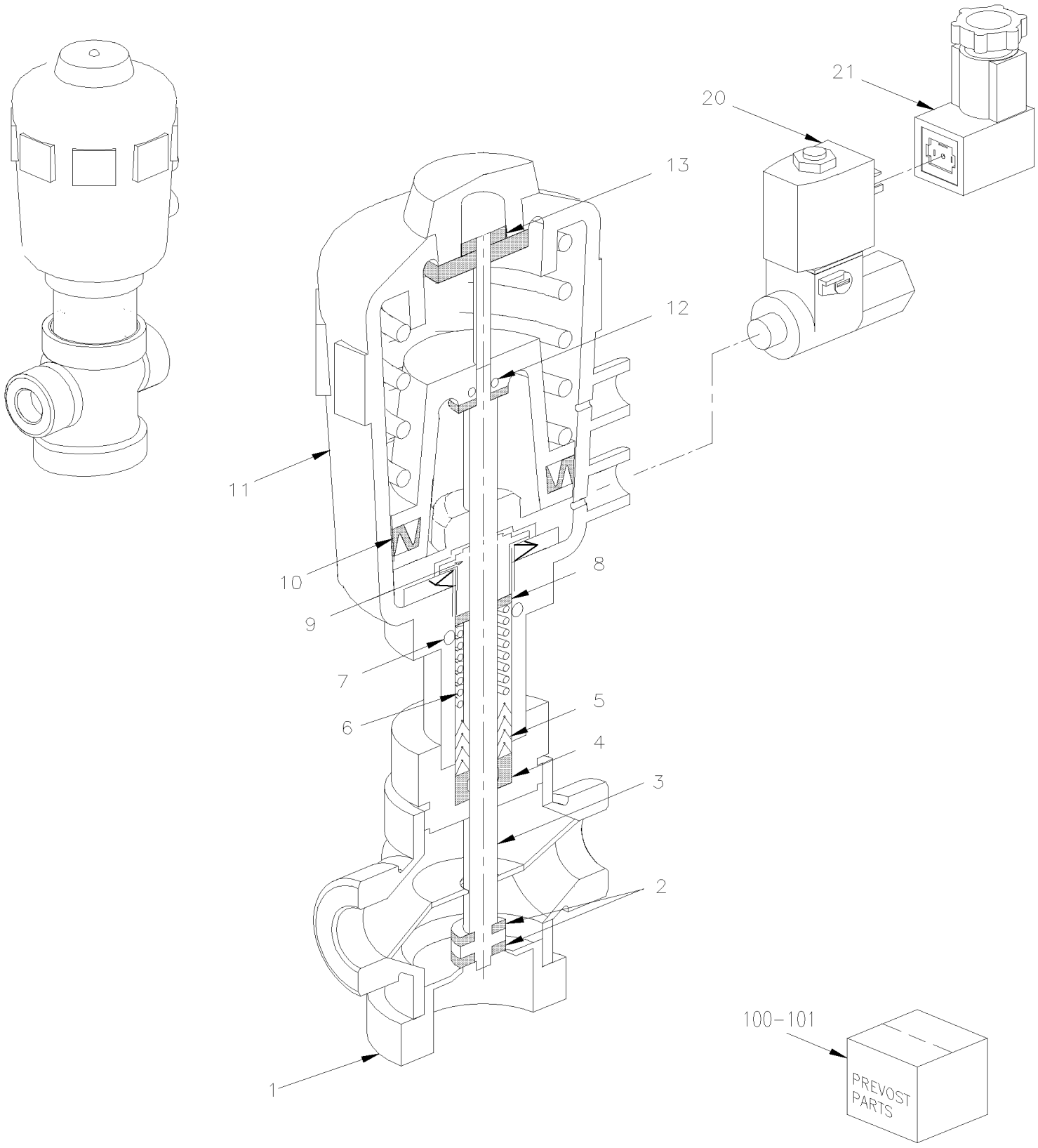

From 6-8806 To 8-9339		Date:07/2024	PAGE:Y2-2207-02
WATER VALVE - W/3 WAYS BY-PASS			

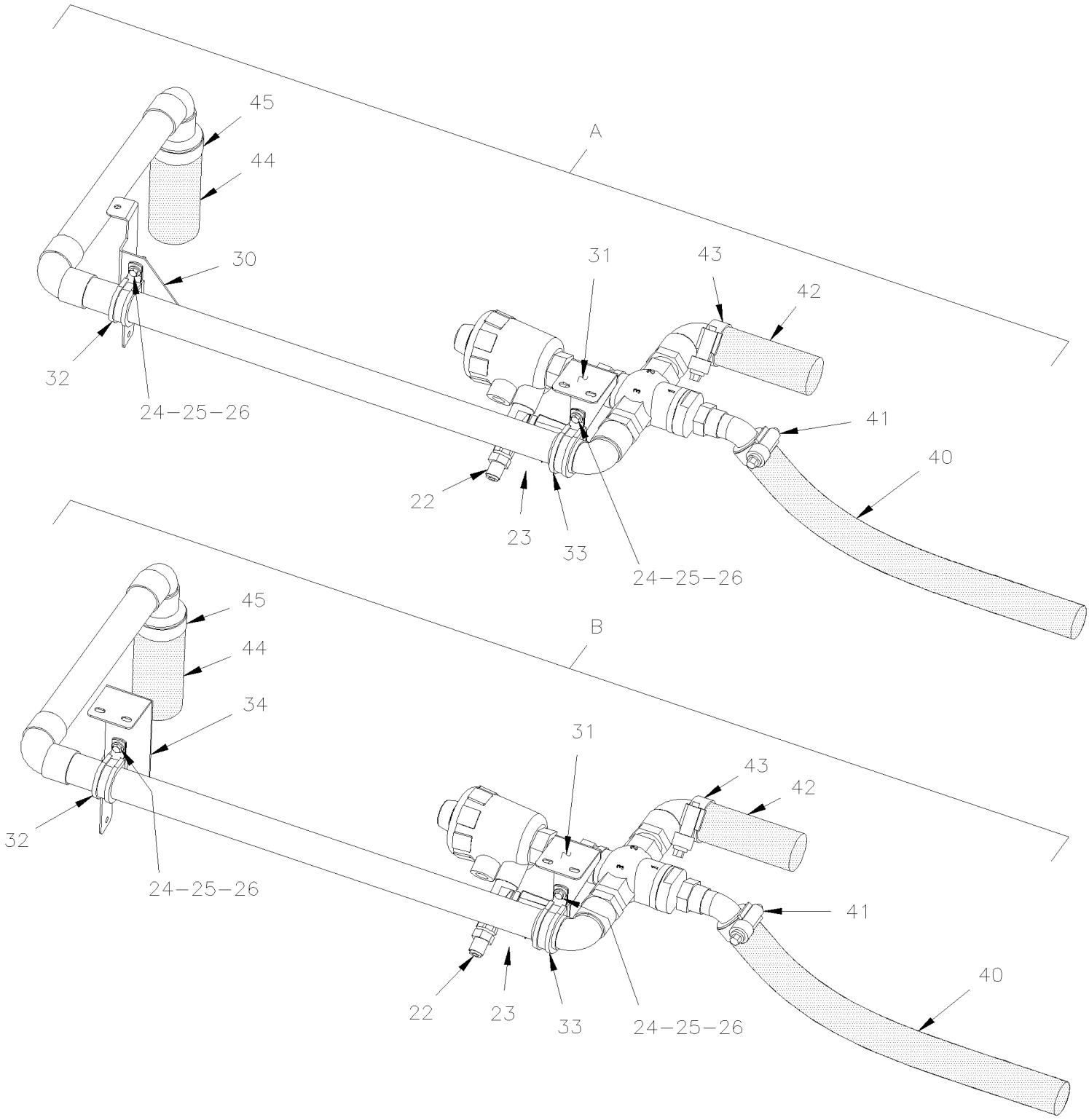

From 6-8806 To 8-9339		Date:07/2024	PAGE:Y2-2207-02

WATER VALVE - W/3 WAYS BY-PASS

Item#	Part	Description	XLII 45	XLII MTH40	XLII MTH45	XLII MTH45E	NOTES
	871381	. WATER VALVE ASSY / 24V / 3/WAY 3/4" NPT		1	1	1	
1	N.S.S.	. . BODY		1	1	1	1
2	N.S.S.	. . SEAL		1	1	1	1
3	N.S.S.	. . SPINDLE		1	1	1	1
4	N.S.S.	. . WIPER		1	1	1	1
5	N.S.S.	. . V-SEAL		3	3	3	1
6	N.S.S.	. . SPRING		1	1	1	1
7	N.S.S.	. . O-RING		1	1	1	1
8	N.S.S.	. . LIP SEAL		1	1	1	1
9	N.S.S.	. . SCREW PISTON		1	1	1	1
10	N.S.S.	. . CYLINDER SEAL		1	1	1	1
11	N.S.S.	. . ACTUATOR CASING		1	1	1	1
12	N.S.S.	. . O-RING.		1	1	1	1
13	N.S.S.	. . LIP SEAL		1	1	1	1
14	N.S.S.	. . CONE GLAND 1/8"		2	2	2	1
20	871390	. SOLENOID VALVE / 24V 4 WATTS		1	1	1	
. NS	871391	. . COIL 24V 4 WATTS		1	1	1	
21	563204	. CONNECTOR / SOCKET HOUSING ASSY 4C / BURKET 303148		1	1	1	
22	641332	MALE CONNECTOR / PUSH-IN FITTING / #4x1/4NPT-M BR		1	1	1	
23	642028	MALE CONNECTOR / PUSH-IN FITTING / 6MM x M5-0.8 BR		1	1	1	
24	500588	SCREW CAP HEX M4-0.7x20 G8.8 Z050		2	2	2	
25	500438	WASHER FL .187x.437x.050 Z050		2	2	2	
26	500590	NUT HEX NYRT M4-0.7 Z050		2	2	2	
30	374194	SUPPORT WATER VALVE		1	1	1	
31	374217	SUPPORT WATER VALVE BACKWARD		1	1	1	
32	952637	CLAMP / 1"1/16 I.D.		1	1	1	
33	952639	CLAMP / 1"1/4 I.D.		1	1	1	
34	374195	SUPPORT WATER VALVE FORWARD		1		1	
40	503651	HOSE SILICONE 2PLY 7/8" I.D. x 3'		AR	AR	AR	
41	504646	HOSE CLAMP / 11/16"-1"1/4 / C.T. 9412		1	1	1	
42	503652	HOSE SILICONE 2PLY 1 1/8" I.D. x 3'		AR	AR	AR	
43	504658	HOSE CLAMP / 13/16"-1"3/4 / C.T. 9420		1	1	1	
44	503392	HOSE SILICONE 4PLY 1 3/8" I.D. x 4'		AR	AR	AR	
45	504657	HOSE CLAMP / 1"1/16-2" C.T. 9424		1	1	1	
100	871389	SEAL KIT / WATER SIDE		1	1	1	
101	871388	SEAL KIT / AIR PISTON SIDE		1	1	1	
A	Call order desk	WATER VALVE ASSY W/PIPE & SUPPORT			1		P
. NS	374281	. ADAPTOR 7/8" I.D. WELDED x 3/4" B.P.T. MALE			1		
. NS	374282	. ADAPTOR 1 1/8" I.D. WELDED x 3/4" B.P.T. MALE			2		
B	374198P	WATER VALVE ASSY W/PIPE & SUPPORT		1		1	

From 6-8806 To 8-9339		Date:07/2024	PAGE:Y2-2207-02

WATER VALVE - W/3 WAYS BY-PASS

Item#	Part	Description	XLII 45	XLII MTH40	XLII MTH45	XLII MTH45E	NOTES
		1) NOT SOLD SEPARATELY					
		P) CALL ORDER DESK FOR SPECIFIC APPLICATION (V.I.N.)					

From Y-7046 To 8-9339		Date:07/2024	PAGE:Y2-2207-10
WATER VALVE - W/DRIVER'S HEATER			

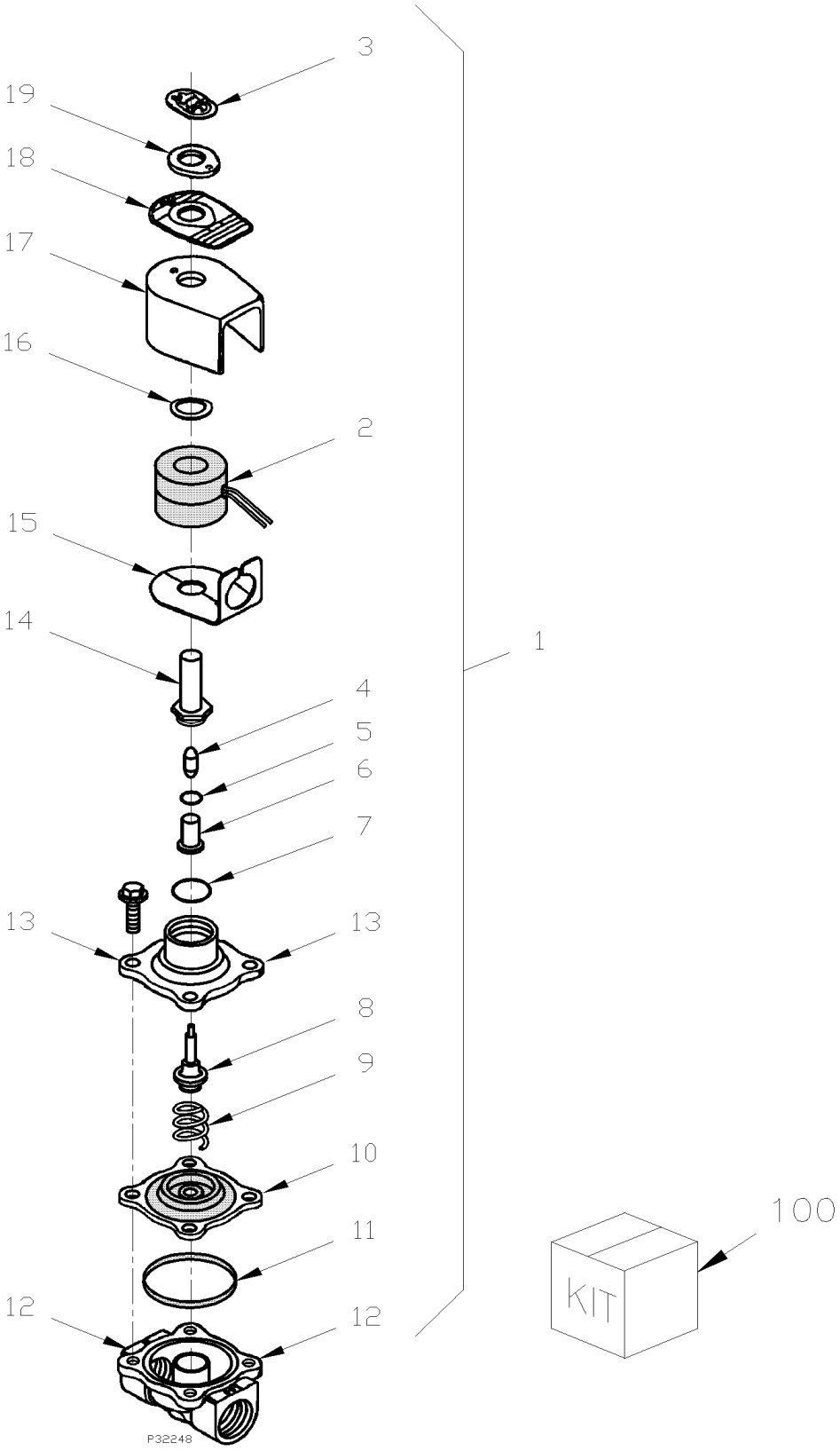

From Y-7046 To 8-9339		Date:07/2024	PAGE:Y2-2207-10
WATER VALVE - W/DRIVER'S HEATER			

A

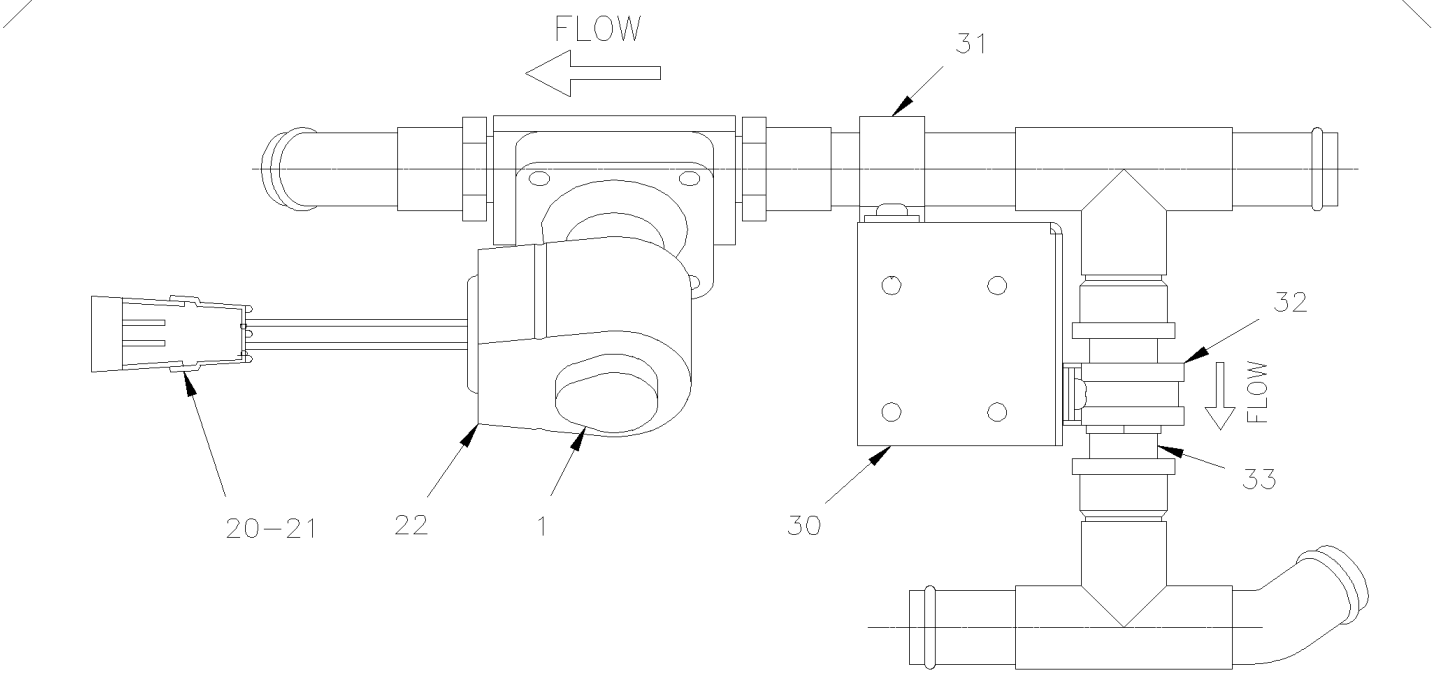

B

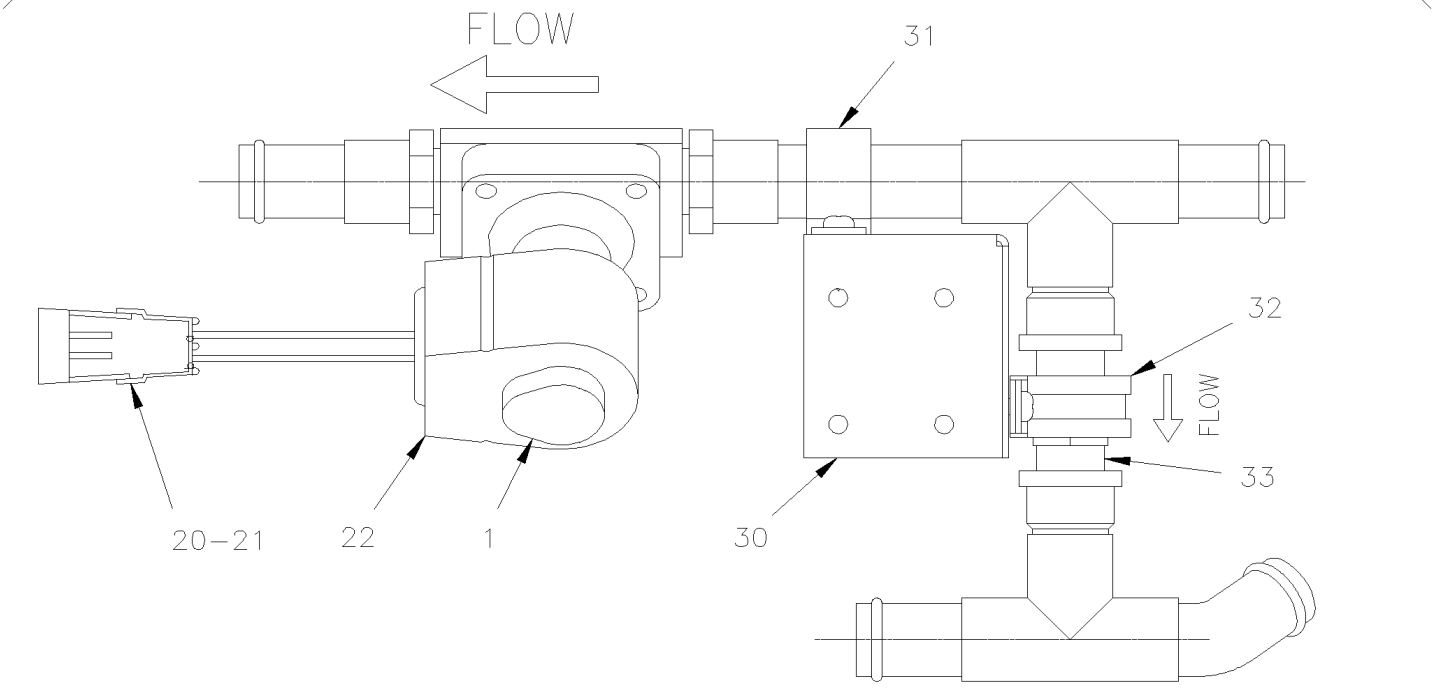

From Y-7046 To 8-9339		Date:07/2024	PAGE:Y2-2207-10

WATER VALVE - W/DRIVER'S HEATER

Item#	Part	Description	XLII 45	XLII MTH40	XLII MTH45	XLII MTH45E	NOTES
	372854	. VALVE ASSY / W/CONNECTOR	1	1	1	1	
1	870812	. . VALVE WATER ASSY / 24 V	1	1	1	1	
2	870960	. . . COIL 24V	1	1	1	1	
3	N.S.S.	. . . RETAINING CLIP	1	1	1	1	1
4	N.S.S.	. . . CORE	1	1	1	1	1
5	N.S.S.	. . . PLUG NUT GASKET	1	1	1	1	1
6	N.S.S.	. . . PLUG NUT ASSY	1	1	1	1	1
7	N.S.S.	. . . GASKET	1	1	1	1	1
8	N.S.S.	. . . DISC HOLDER	1	1	1	1	1
9	N.S.S.	. . . SPRING	1	1	1	1	1
10	N.S.S.	. . . DIAPHRAGM	1	1	1	1	1
11	N.S.S.	. . . GASKET	1	1	1	1	1
12	N.S.S.	. . . BODY	1	1	1	1	1
13	N.S.S.	. . . VALVE BONNET	1	1	1	1	1
14	N.S.S.	. . . SOLENOID BASE	1	1	1	1	1
15	N.S.S.	. . . HOUSING	1	1	1	1	1
16	N.S.S.	. . . SPRING WASHER	1	1	1	1	1
17	N.S.S.	. . . COVER	1	1	1	1	1
18	N.S.S.	. . . NAMEPLATE	1	1	1	1	1
19	N.S.S.	. . . SPACER	1	1	1	1	1
20	561566	. CONNECTOR / WEATHER PACK / PH 2C / BLACK / PED 12010973	1	1	1	1	
NS	561565	. CABLE SEAL / GREEN / PED 15324982	2	2	2	2	
NS	561568	. PIN TERMINAL / 16-14 / PED 12089305	2	2	2	2	
21	560931	. DIODE / 3AMPS	1	1	1	1	
22	504356	. GROMMET / .625x.875x.062x.312x1.125	1	1	1	1	
30	373642	. SUPPORT / WATER VALVE	1	1	1	1	
31	952633	. CLAMP / 7/8" I.D.	1	1	1	1	
32	952635	. CLAMP / 1" I.D.	1	1	1	1	
33	870727	. CHECK VALVE 1/2 NPT	1	1	1	1	
100	870872	KIT REPAIR	AR	AR	AR	AR	
A	Call order desk	WATER VALVE ASSY / W/PIPE	1				P
B	373645P	WATER VALVE ASSY / W/PIPE		1	1	1	
		1) NOT SOLD SEPARATELY					
		P) CALL ORDER DESK FOR SPECIFIC APPLICATION (V.I.N.)					

From Y-7046 To 6-8906		Date:07/2024	PAGE:Y2-2207-20
WATER VALVE - BYPASS W/WATER HEATER			

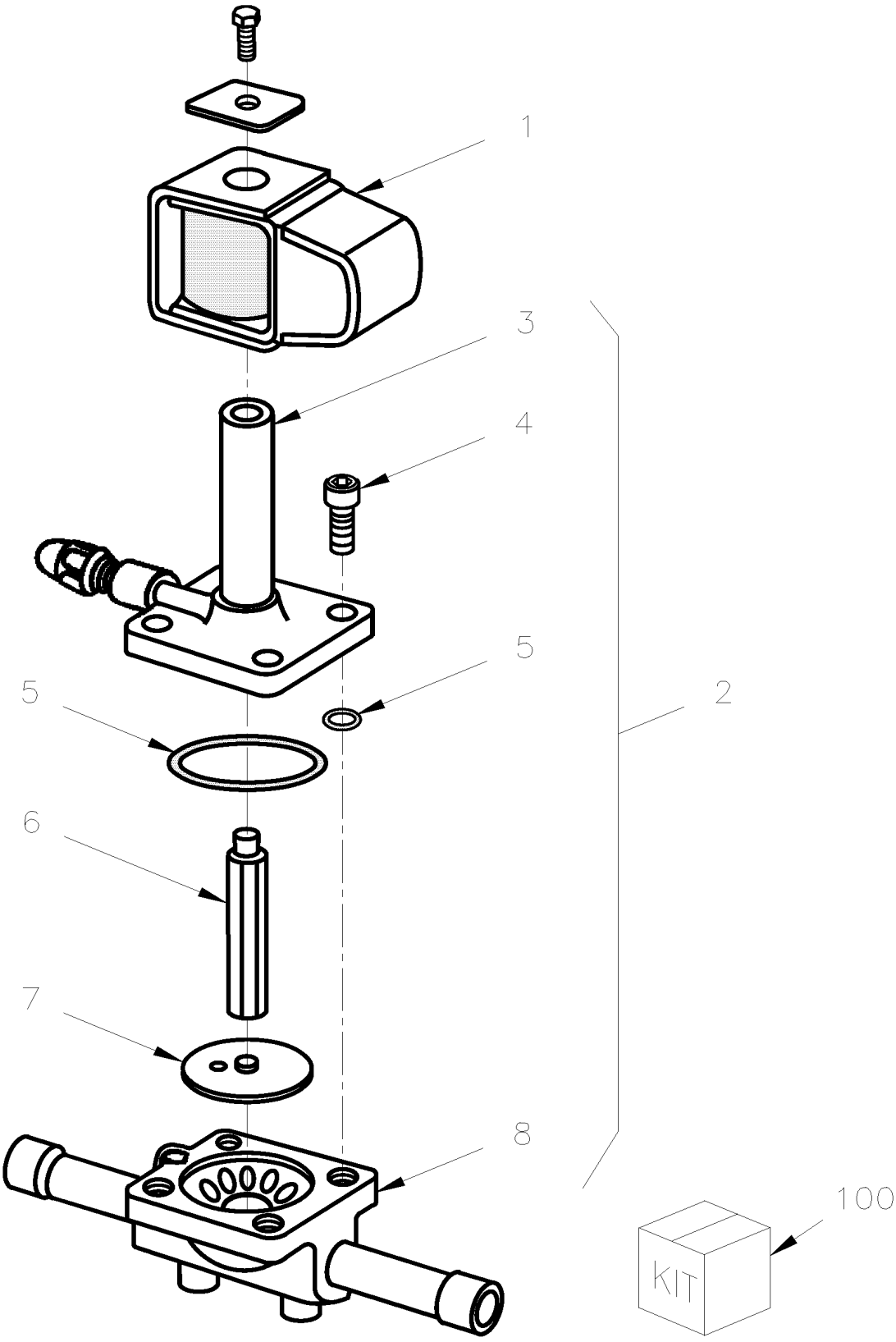

From Y-7046 To 6-8906		Date:07/2024	PAGE:Y2-2207-20
WATER VALVE - BYPASS W/WATER HEATER			

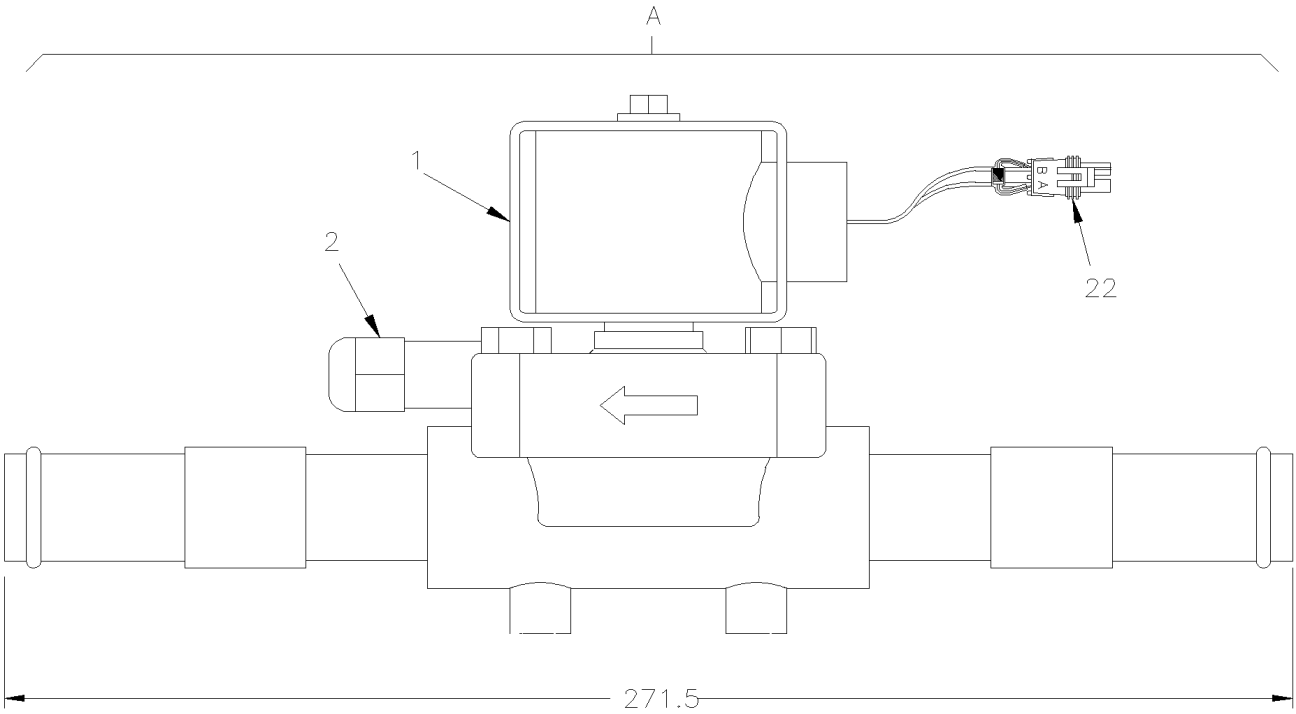

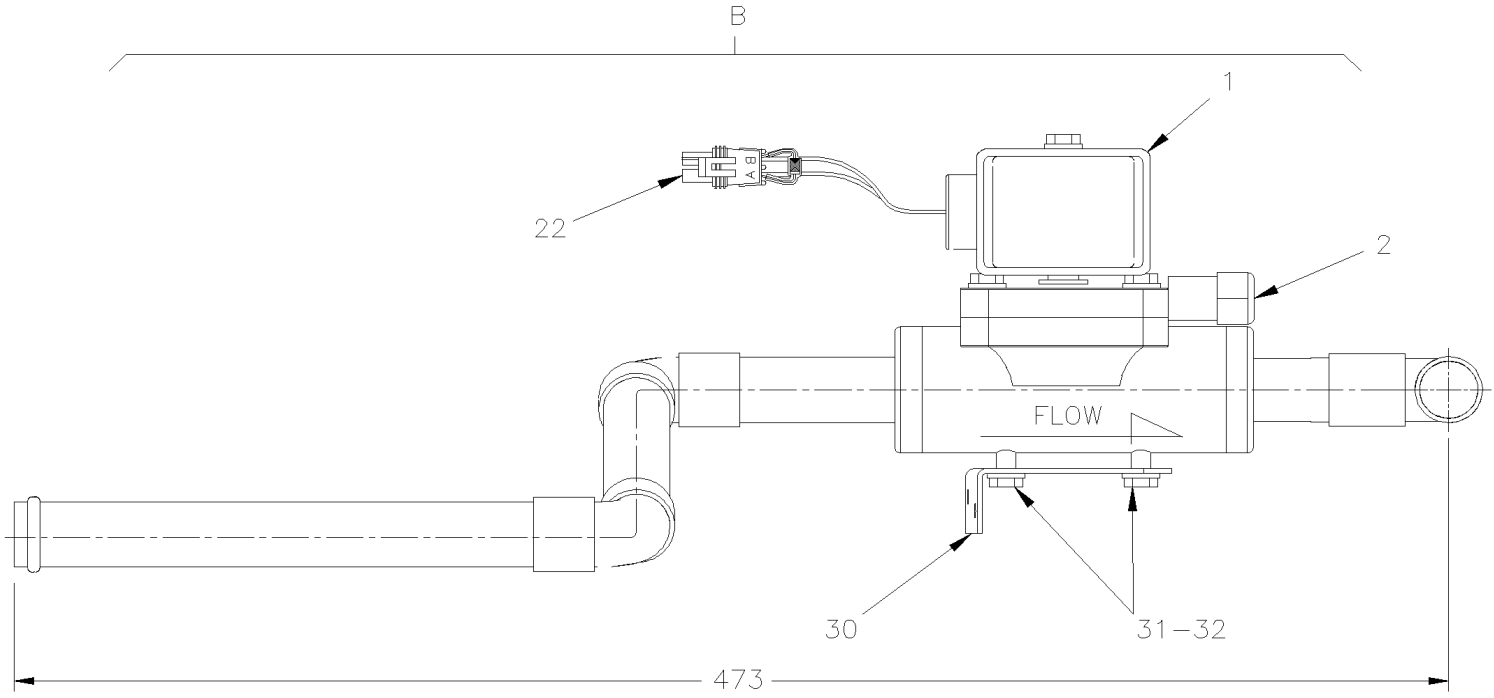

From Y-7046 To 6-8906		Date:07/2024	PAGE:Y2-2207-20

WATER VALVE - BYPASS W/WATER HEATER

Item#	Part	Description	XLII 45	XLII MTH40	XLII MTH45	XLII MTH45E	NOTES
1	950055	. COIL 24V To 7-9259	1	1	1	1	
1	950953	. COIL 24V / SERVICE From 7-9260	1	1	1	1	
2	870886	. VALVE WATER BYPASS To 7-9259	1	1	1	1	
2	950952	. VALVE WATER BYPASS / SERVICE From 7-9260	1	1	1	1	
3	N.S.S.	. . BONNET & ENCLOSING TUBE ASSY	1	1	1	1	1
4	500238	. . SCREW CAP HEXS 1/4-20x3/4 ZP	4	4	4	4	
5	N.S.S.	. . O-RING	1	1	1	1	1
6	N.S.S.	. . PLUNGER ASSY	1	1	1	1	1
7	N.S.S.	. . DIAPHRAGM ASSY	1	1	1	1	1
8	N.S.S.	. . BODY	1	1	1	1	1
22	561690	. CONNECTOR / WEATHER PACK / SH 2C / BLACK / PED 12015792	1	1	1	1	
NS	561689	. SOCKET TERMINAL / 20-18 / PED 12089188	2	2	2	2	
NS	561565	. CABLE SEAL / GREEN / PED 15324982	2	2	2	2	
30	373748	. SUPPORT / BY-PASS VALVE		1	1	1	
31	500162	. SCREW CAP HEX 1/4-20x1/2 G5 Z050		2	2	2	
32	500473	. WASHER LO SPT .262x.489x.062 Z050		2	2	2	
NS	373311	SUPPORT / BY-PASS VALVE	1				
100	870980	KIT REPAIR To 7-9259	AR	AR	AR	AR	
A	373310	WATER BY-PASS VALVE ASSY / W/TUBE & CONNECTOR	1				
B	373750	WATER BY-PASS VALVE ASSY / W/TUBE & CONNECTOR		1	1	1	
		1) NOT SOLD SEPARATELY					

From 2-7822 To 8-9339		Date:07/2024	PAGE:Y2-2207-99
WATER VALVE - W/2 WAYS / SERVICE			

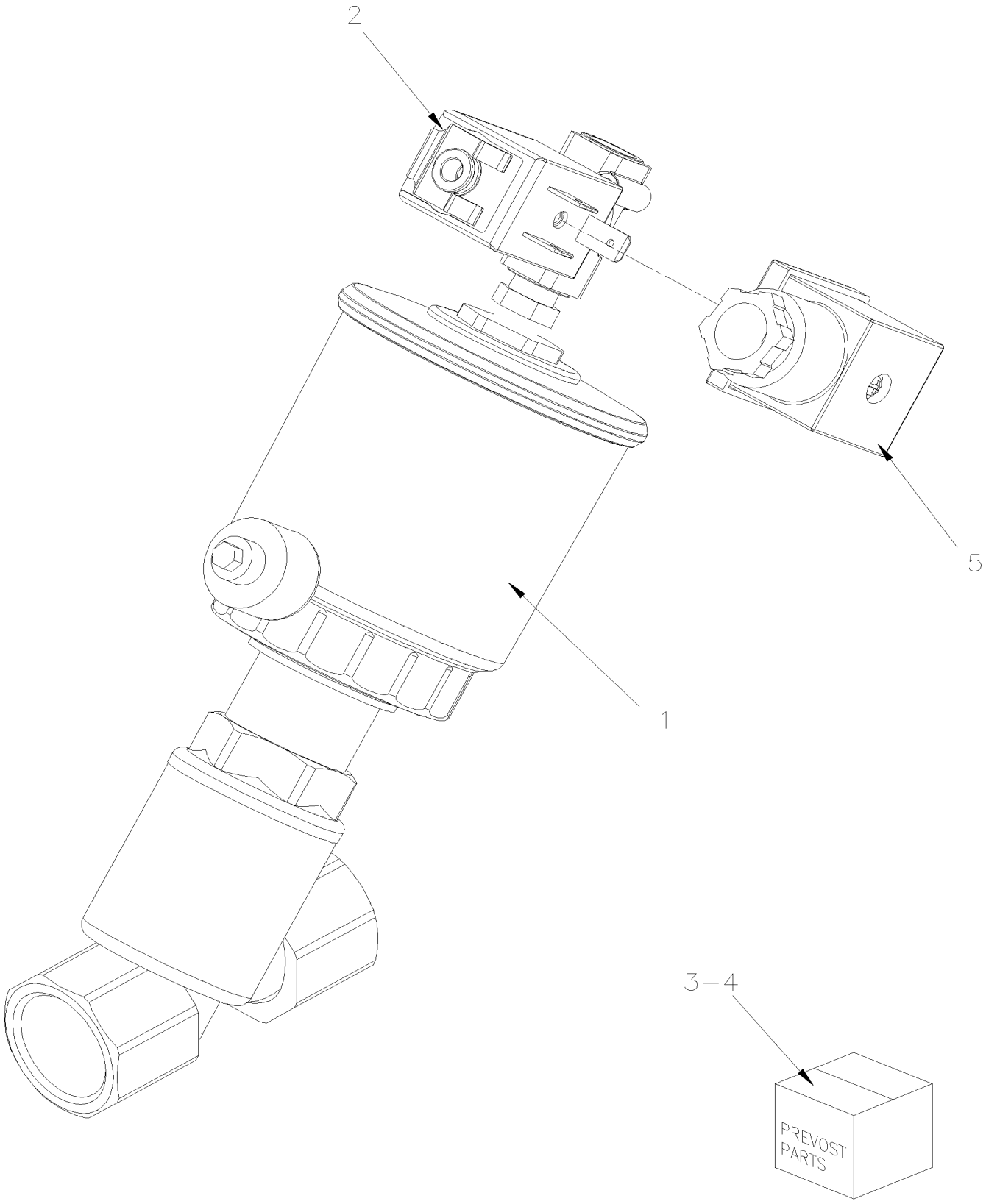

From 2-7822 To 8-9339		Date:07/2024	PAGE:Y2-2207-99

WATER VALVE - W/2 WAYS / SERVICE

Item#	Part	Description	XLII 45	XLII MTH40	XLII MTH45	XLII MTH45E	NOTES
1	871454	WATER VALVE ASSY / 24V	1	1	1	1	
2	871458	. VALVE PILOT	1	1	1	1	
3	871459	. VALVE PSITON SERVICE KIT	1	1	1	1	
. NS	N.S.S.	. . VALVE PSITON SERVICE KIT	1	1	1	1	1
. NS	N.S.S.	. . WASHER	1	1	1	1	1
. NS	N.S.S.	. . WASHER	1	1	1	1	1
. NS	N.S.S.	. . SEAL	1	1	1	1	1
4	871460	. CONNECTOR KIT	1	1	1	1	
5	641385	CONNECTOR / SOCKET HOUSING ASSY 3C / PNEUMAC 54934-01	1	1	1	1	
		1) NOT SOLD SEPARATELY					

From Y-7046 To 8-9339		Date:07/2024	PAGE:Y2-2208-00
A/C EXPANSION VALVE			

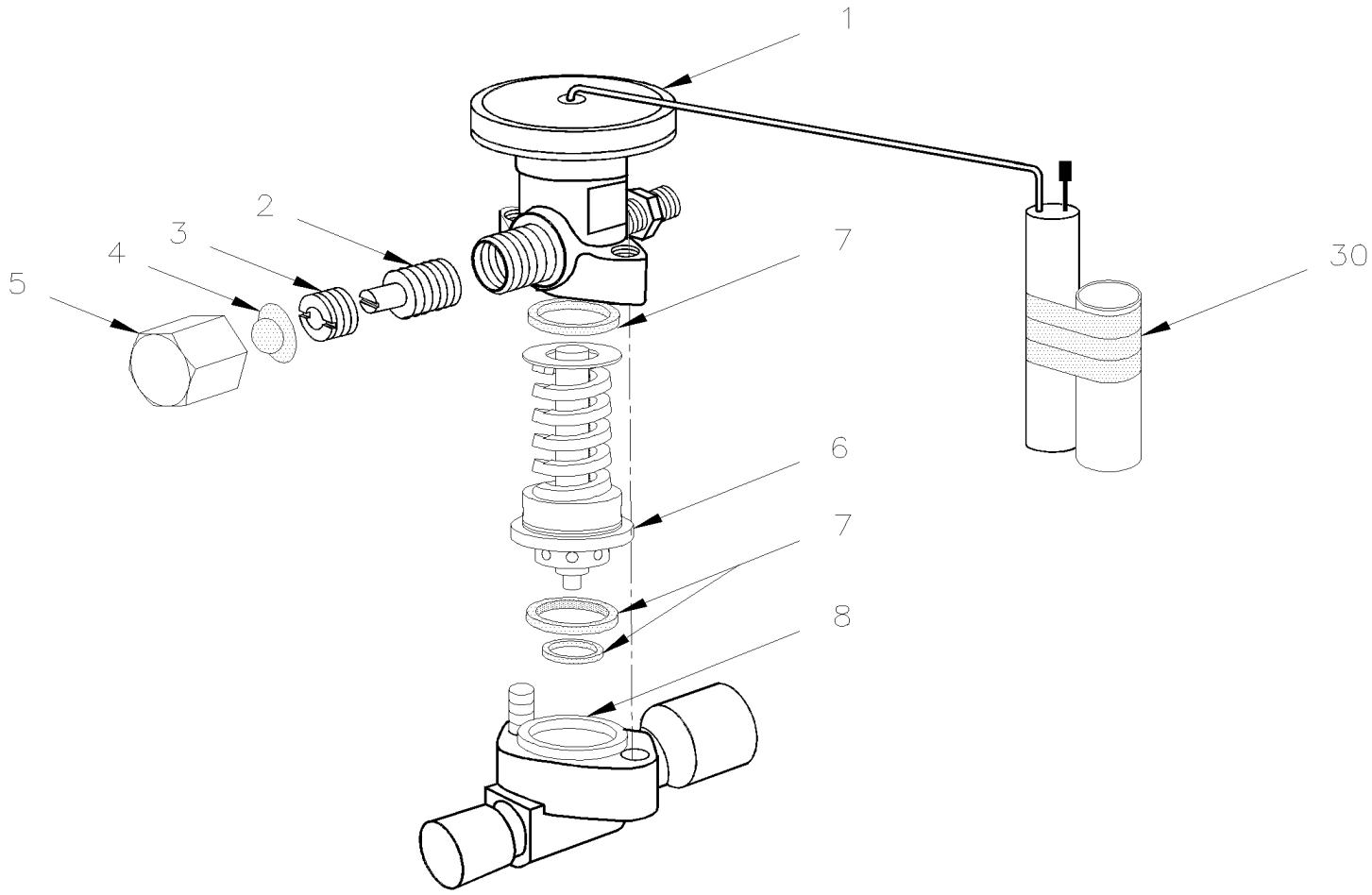

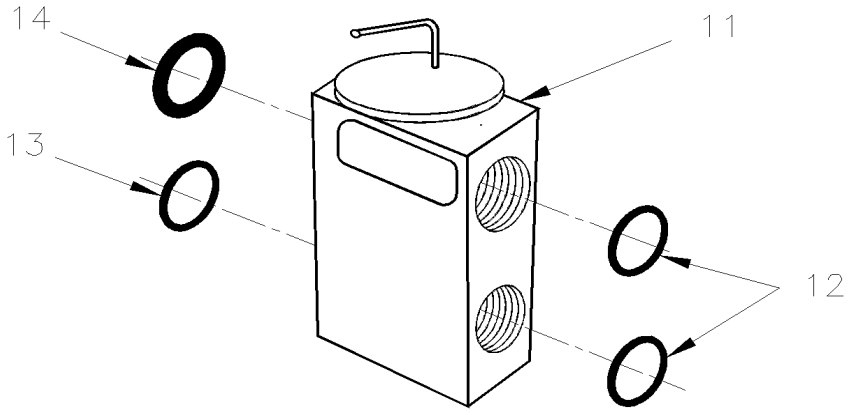

From Y-7046 To 8-9339		Date:07/2024	PAGE:Y2-2208-00
A/C EXPANSION VALVE			

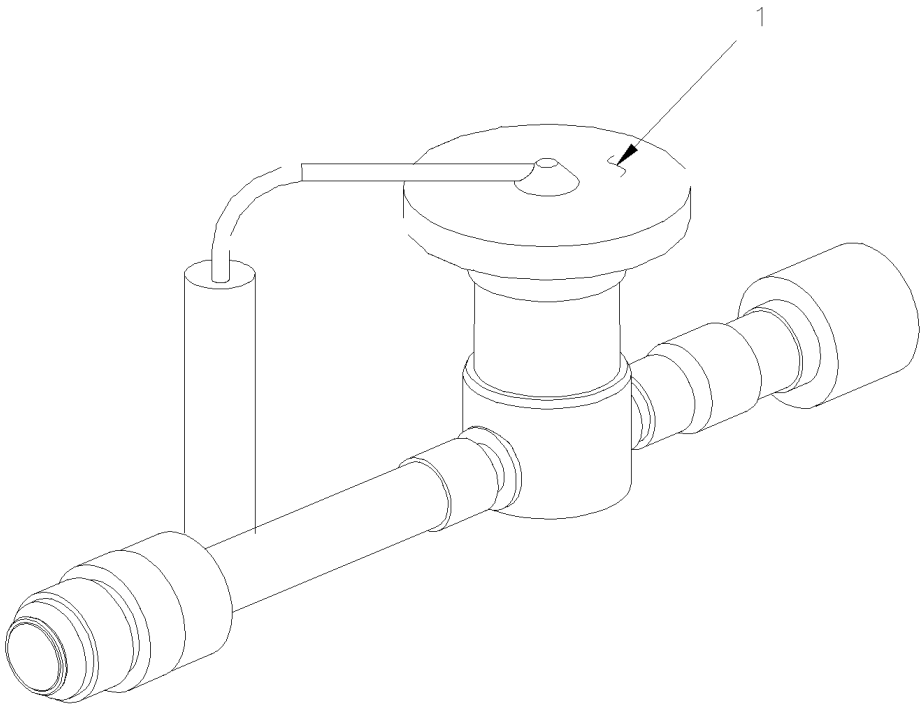

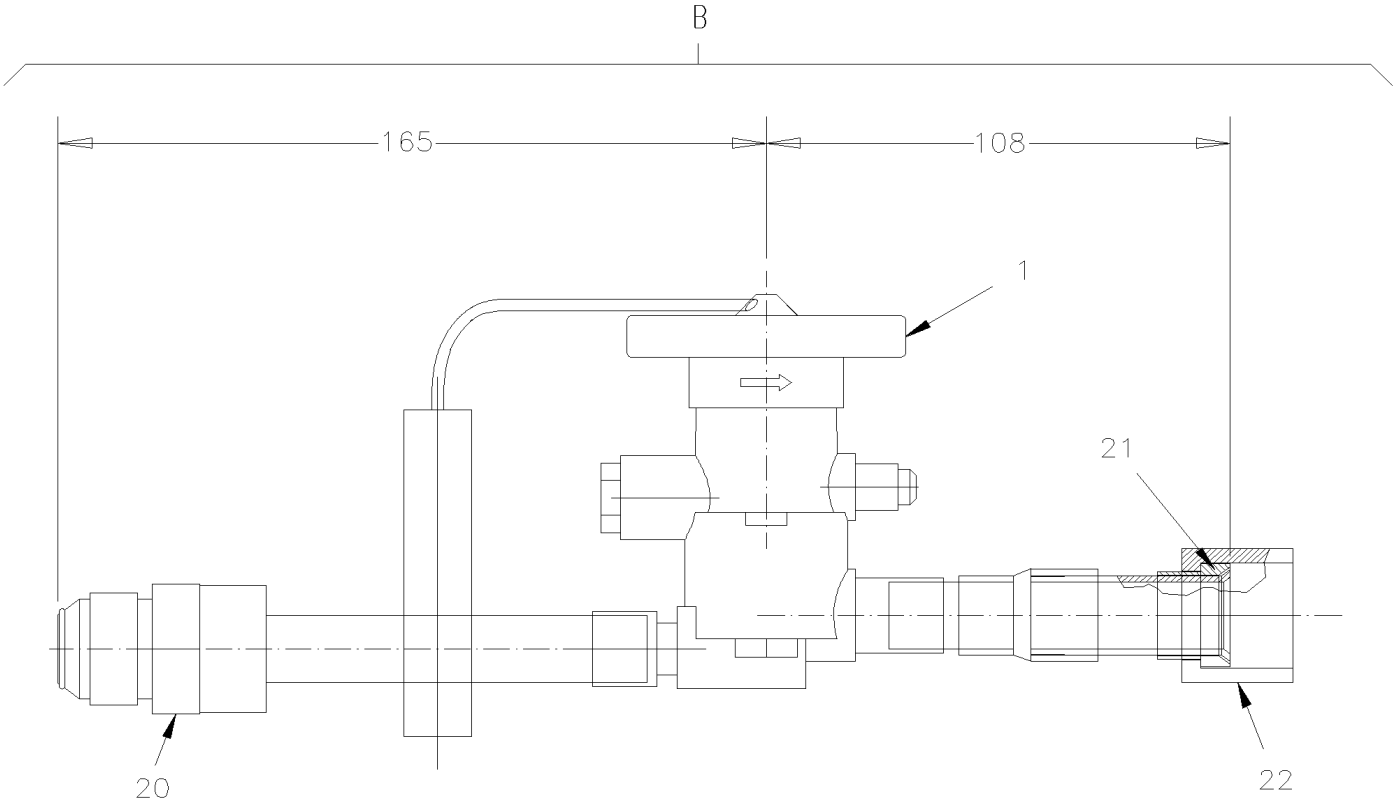

From Y-7046 To 8-9339		Date:07/2024	PAGE:Y2-2208-00
A/C EXPANSION VALVE			

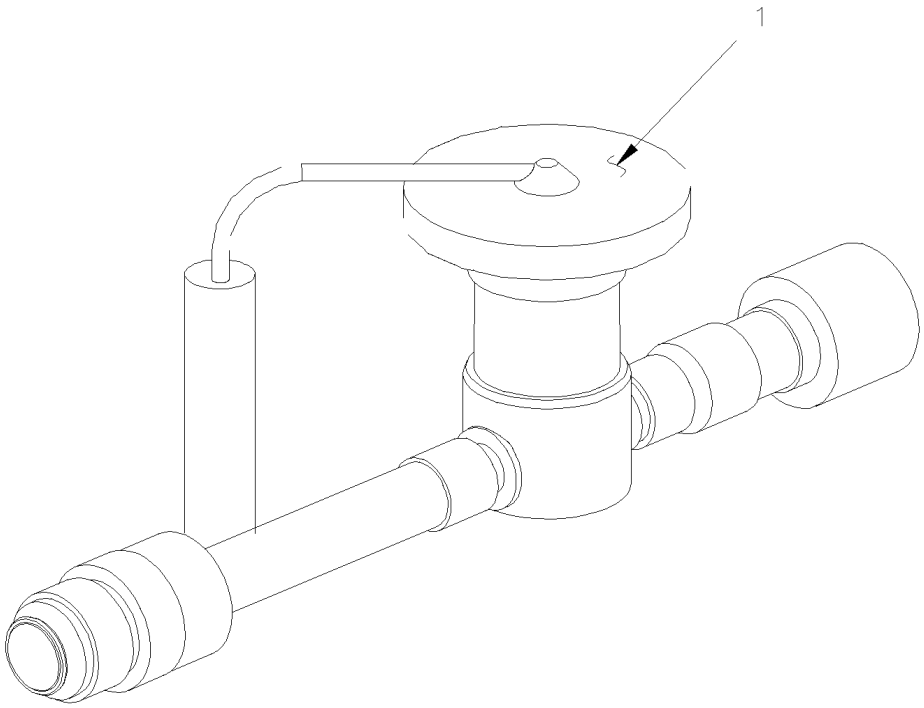

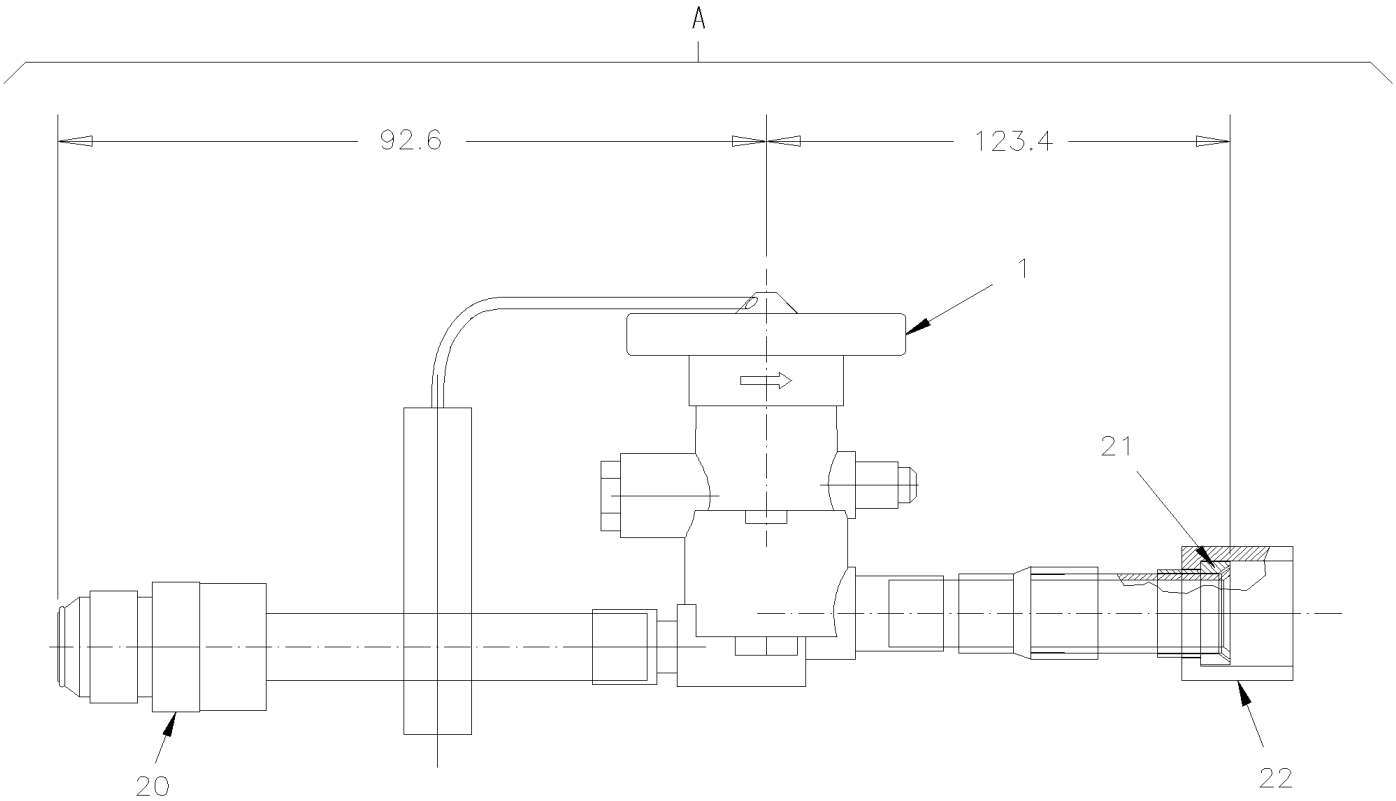

From Y-7046 To 8-9339		Date:07/2024	PAGE:Y2-2208-00

A/C EXPANSION VALVE

Item#	Part	Description	XLII 45	XLII MTH40	XLII MTH45	XLII MTH45E	NOTES
	871344	VALVE, EXPANSION ASSY / WITH PIPE From 4-8165		1	1	1	A
	950320	. VALVE, EXPANSION 5 1/2 TON	1	1	1	1	
1	950241	. . ELEMENT POWER R134A	1	1	1	1	
1	950241	. . ELEMENT POWER R134A From 4-8165		1	1	1	A
2	870622	. . ADJUSTING STEM & PACKING ASSY	1	1	1	1	
3	870621	. . NUT PACKING	1	1	1	1	
4	N.S.S.	. . SEAL	1	1	1	1	1
5	870619	. . NUT CAP	1	1	1	1	
6	950317	. . CAGE ASSY & SPRING / B6B	1	1	1	1	
6	950258	. . CAGE ASSY & SPRING / B3B From 4-8165		1	1	1	A
7	870709	. . SET GASKET	1	1	1	1	
8	N.S.S.	. . FLANGE BODY	1	1	1	1	1
8	504634	T-CLIP / 7/8" - 1"	1	1	1	1	
8	504637	CABLE TIE / 3/16" x 13"	1	1	1	1	
11	950221	VALVE, EXPANSION / DRIVER'S W/R134A	1	1	1	1	
12	507279	O-RING / ORS FITTING / #8 NEO	1	1	1	1	
13	507278	O-RING / ORS FITTING / #4 NEO	1	1	1	1	
14	507344	O-RING / ORS FITTING / #10 NEO	1	1	1	1	
20	507525	ADAPTER JIC @ BRAZE W/O-RING / / #12JIC-Mx#10BRAZE-F BR	1	1	1	1	
. NS	501829	. O-RING / ORS FITTING / #12 NEO	1	1	1	1	
21	507518	SLEEVE / JIC 37° FITTING / #12 STL	1	1	1	1	
22	507519	NUT / JIC 37° FITTING / #12JIC-F STL	1	1	1	1	
30	680091	TAPE INSULATING / 1/8" x 2" x 30' / BLACK PT-1	1	1	1	1	
A	453391	VALVE, EXPANSION ASSY / WITH PIPE	1				
A	453391	VALVE, EXPANSION ASSY / WITH PIPE To 6-8805		1	1	1	
B	453985	VALVE, EXPANSION ASSY / WITH PIPE From 6-8806		1	1	1	
		A) WITH SMALL A/C SYSTEM INSTALL ON FRONT DEFROSTER ASSY					
		1) NOT SOLD SEPARATELY					

From Y-7046 To 8-9339		Date:07/2024	PAGE:Y2-2208-10
REFRIGERANT SOLENOID VALVE			

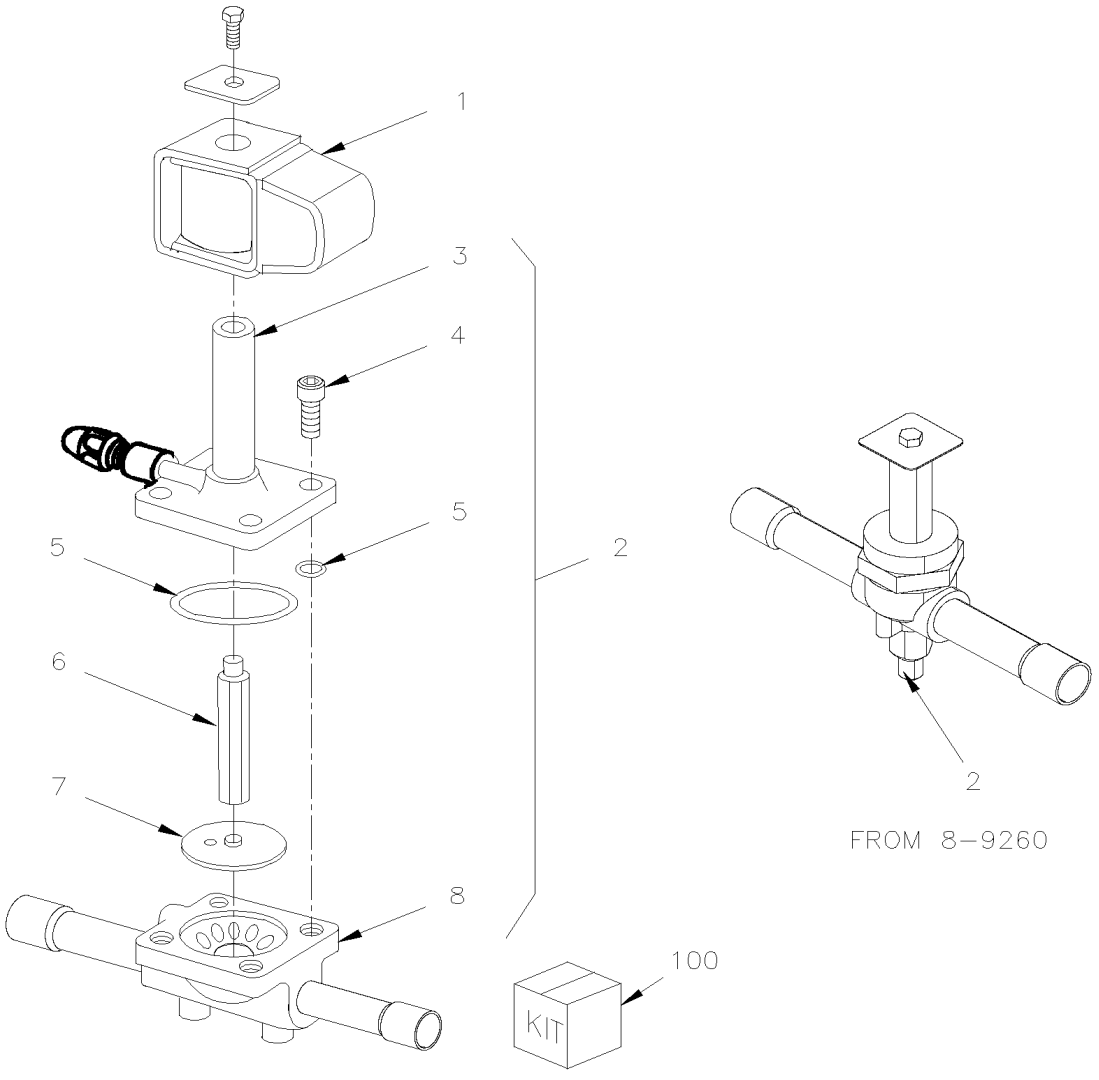

From Y-7046 To 8-9339		Date:07/2024	PAGE:Y2-2208-10
REFRIGERANT SOLENOID VALVE			

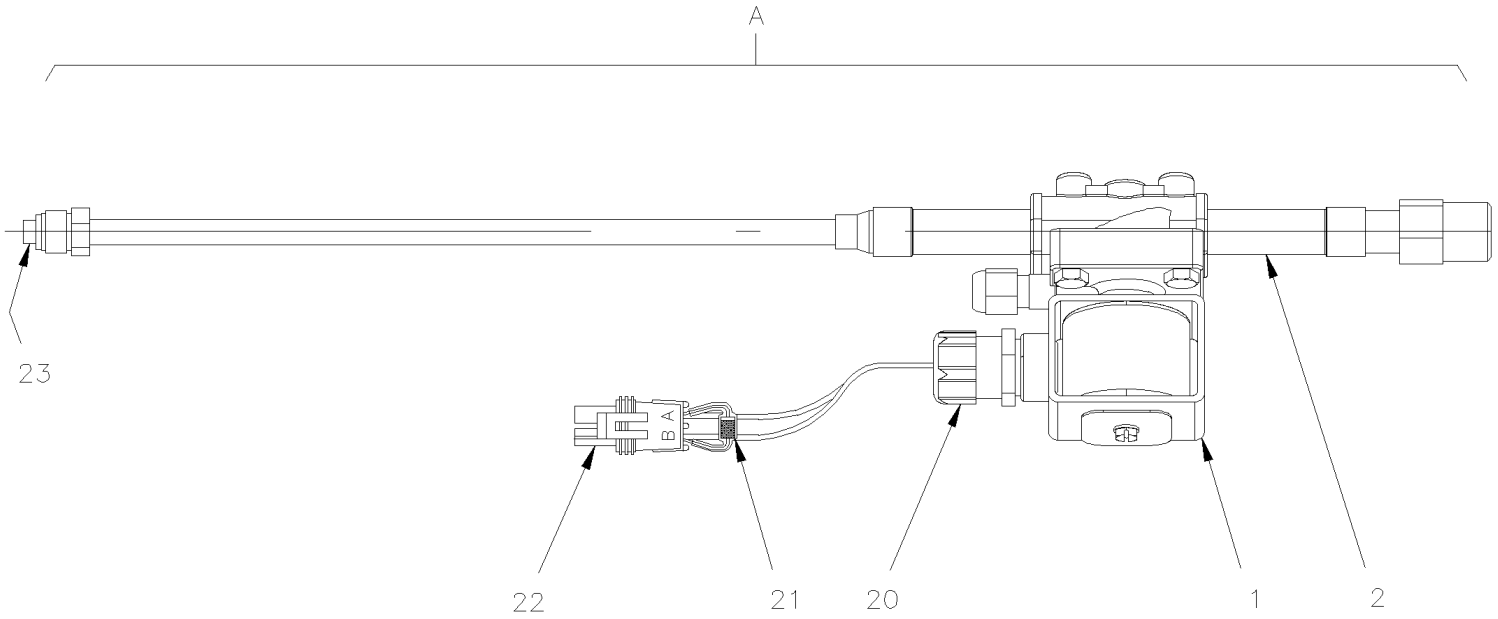

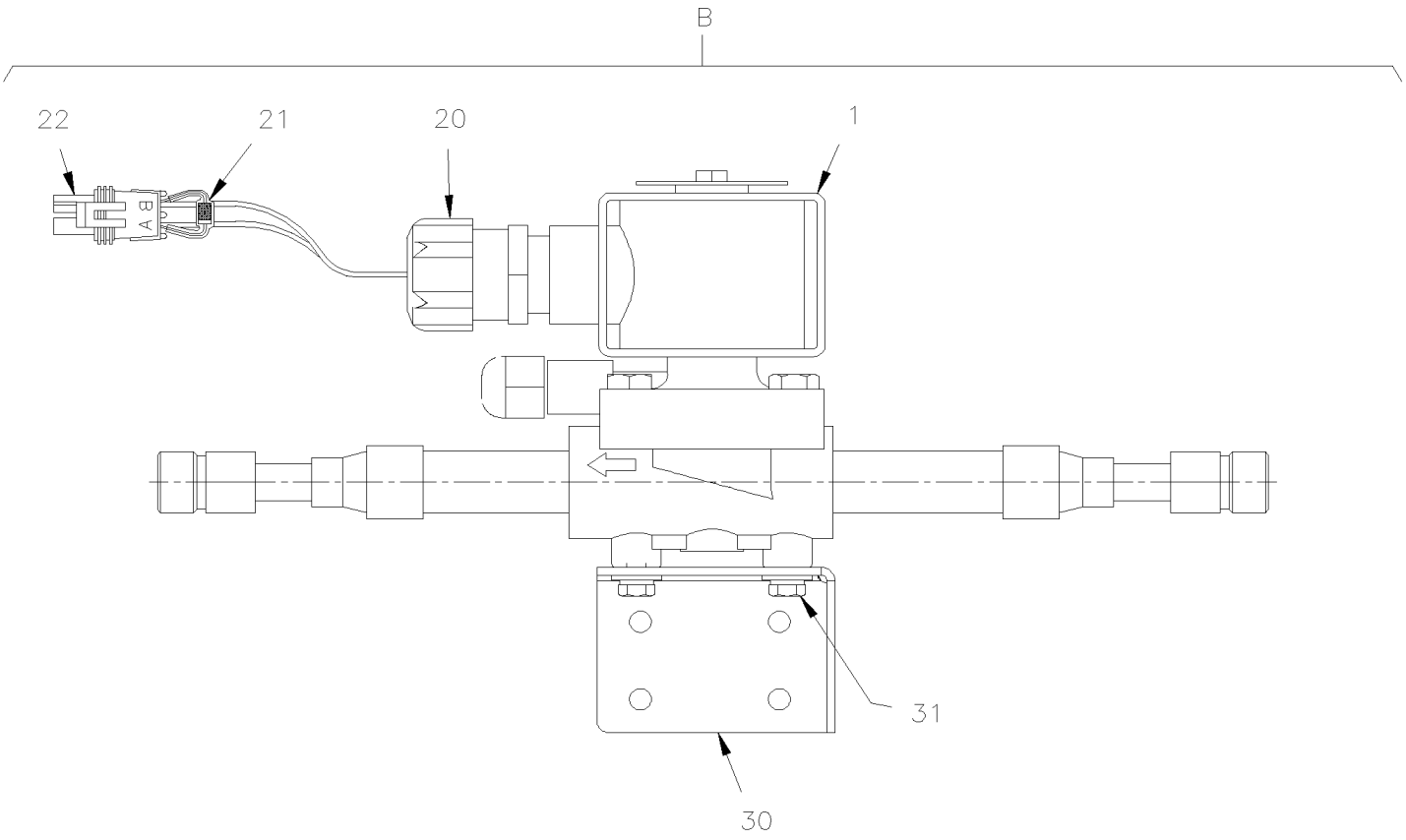

From Y-7046 To 8-9339		Date:07/2024	PAGE:Y2-2208-10
REFRIGERANT SOLENOID VALVE			

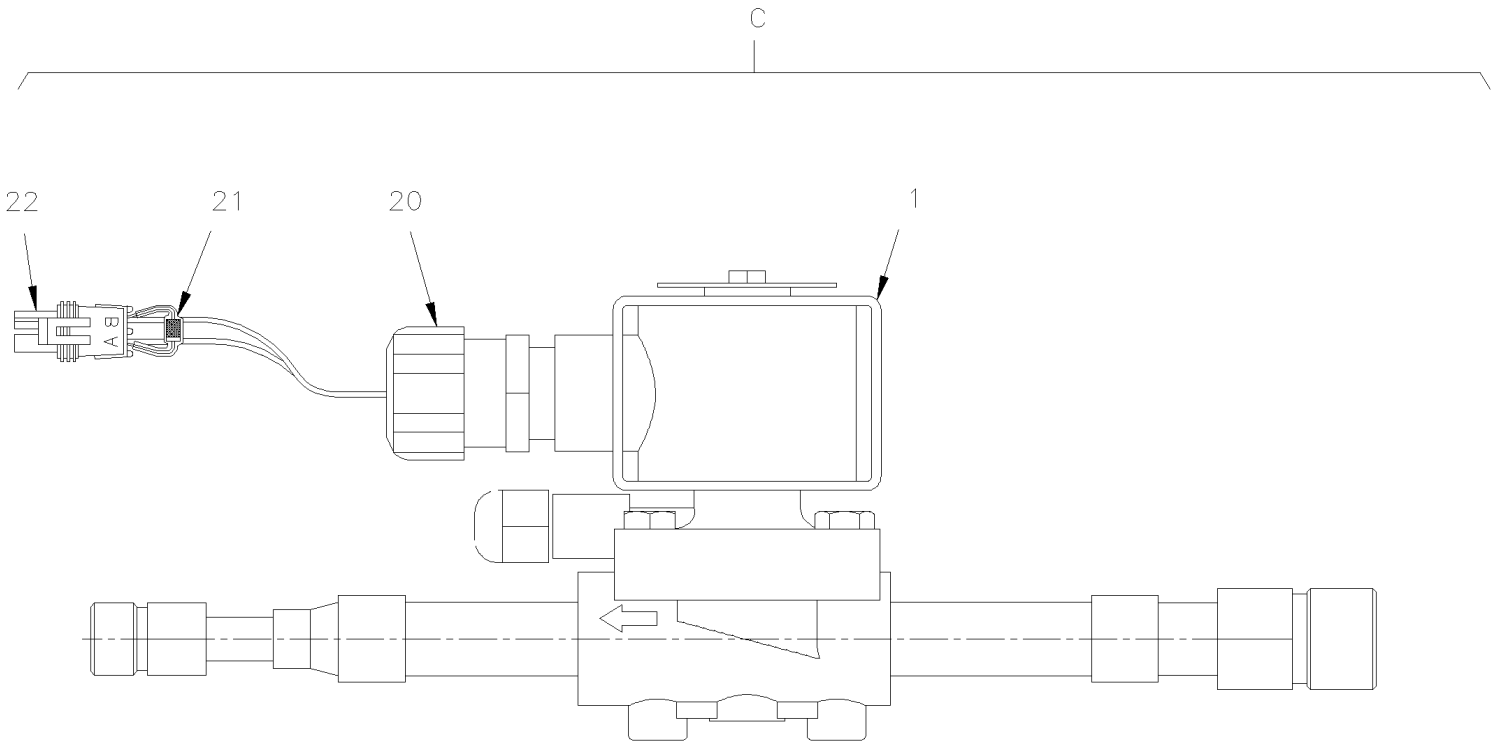

From Y-7046 To 8-9339		Date:07/2024	PAGE:Y2-2208-10

REFRIGERANT SOLENOID VALVE

Item#	Part	Description	XLII 45	XLII MTH40	XLII MTH45	XLII MTH45E	NOTES
1	950055	. COIL 24V To 7-9259	1	1	1	1	
1	950953	. COIL 24V / SERVICE From 7-9260	1	1	1	1	
2	950087	. VALVE REFRIGERANT SOLENOID To 7-9259	1	1	1	1	
2	950951	. VALVE REFRIGERANT SOLENOID From 7-9260	1	1	1	1	
3	N.S.S.	. . BONNET & ENCLOSING TUBE ASSY	1	1	1	1	1
4	500238	. . SCREW CAP HEXS 1/4-20x3/4 ZP	4	4	4	4	
5	N.S.S.	. . O-RING	1	1	1	1	1
6	N.S.S.	. . PLUNGER ASSY	1	1	1	1	1
7	N.S.S.	. . DIAPRAGM ASSY	1	1	1	1	1
8	N.S.S.	. . BODY	1	1	1	1	1
NS	500160	. SCREW CAP HEX #10-24x1/2 Z050	2	2	2	2	
20	560434	. CONNECTOR 1/2" PIPE	1	1	1	1	
21	560931	. DIODE / 3AMPS	1	1	1	1	
22	561690	. CONNECTOR / WEATHER PACK / SH 2C / BLACK / PED 12015792	1	1	1	1	
NS	561565	. CABLE SEAL / GREEN / PED 15324982	2	2	2	2	
NS	561578	. SOCKET TERMINAL / 16-14 / PED 12010182	2	2	2	2	
23	507278	. O-RING / ORS FITTING / #4 NEO	1				
30	453315	. SUPPORT / A/C VALVE		1	1	1	
31	500041	. SCREW CAP HEX #10-24x3/8 SS		2	2	2	
NS	500470	. WASHER LO SPT .193x.334x.047 Z050		2	2	2	
NS	500964	. WASHER FL .203x.500x.047 Z050		2	2	2	
100	950056	KIT REPAIR To 7-9259	AR	AR	AR	AR	
A	453422	VALVE ASSY / REFRIGERANT SOLENOID	1				A
B	453318	VALVE ASSY / REFRIGERANT SOLENOID		1	1	1	B
C	453151	VALVE ASSY / REFRIGERANT SOLENOID		1	1	1	A
		A) IN SPARE COMPARTMENT					
		B) IN SPARE COMPARTEMENT WITH SMALL A/C SYSTEM					
		1) NOT SOLD SEPARATELY					

From Y-7046 To 8-9339		Date:07/2024	PAGE:Y2-2210-00
HEATER & EVAPORATOR BLOWER - INSTALLATION			

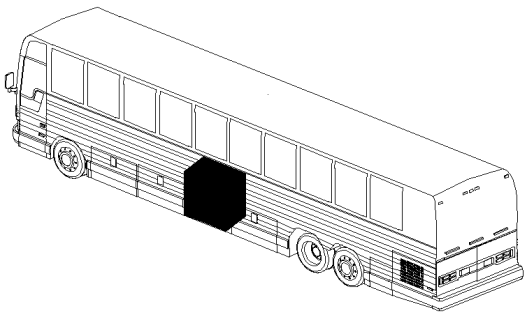

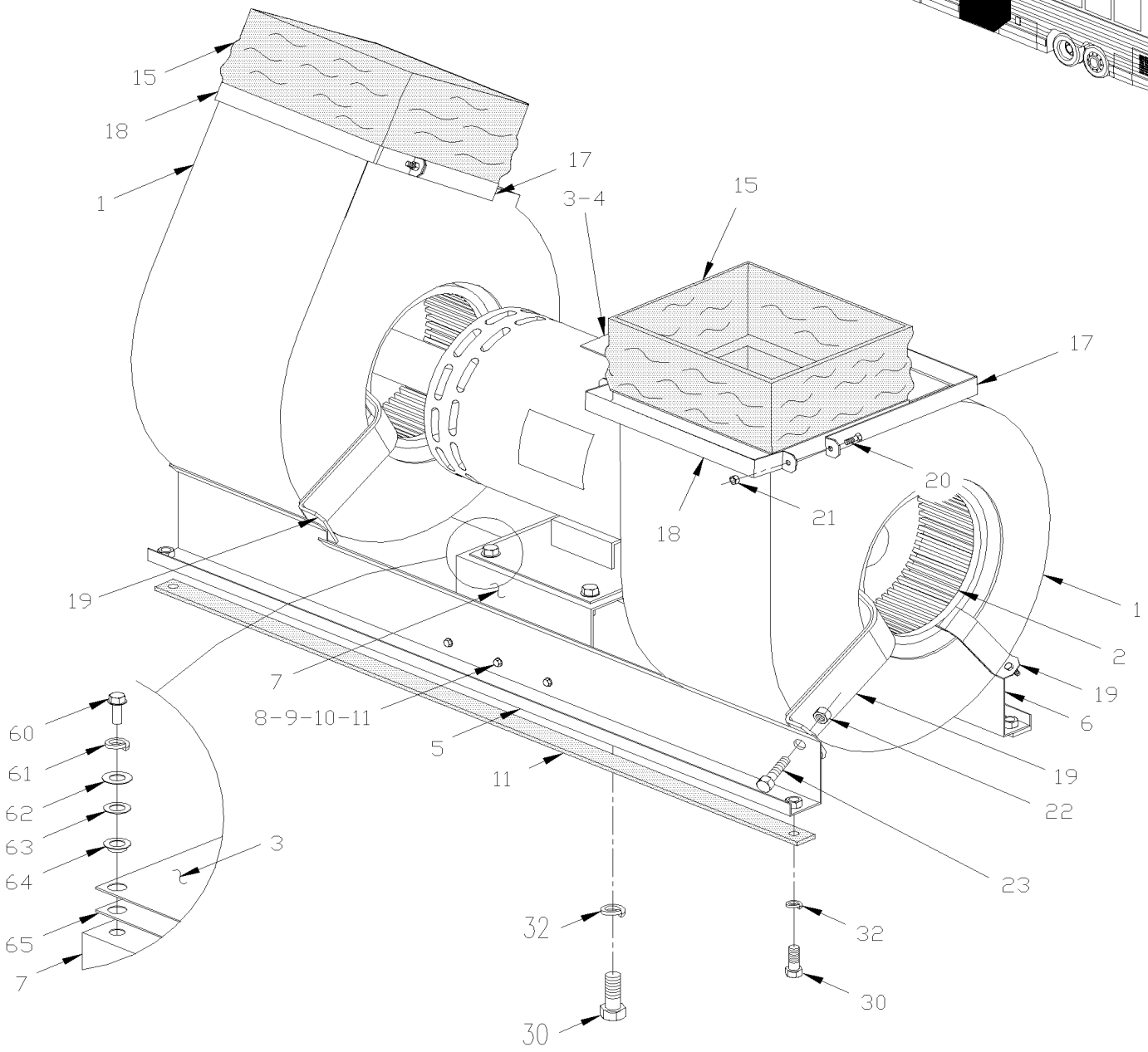

From Y-7046 To 8-9339		Date:07/2024	PAGE:Y2-2210-00
HEATER & EVAPORATOR BLOWER - INSTALLATION			

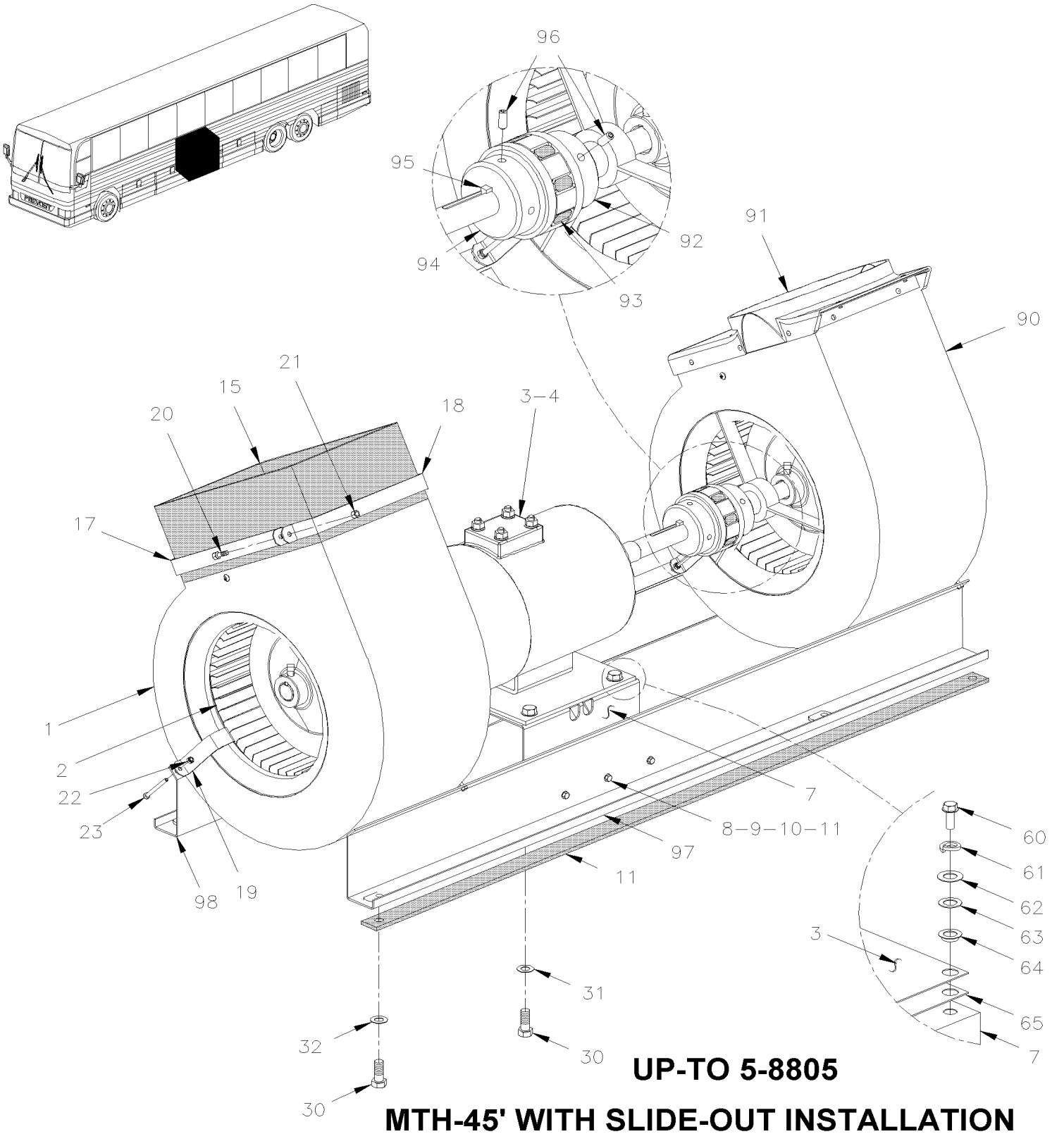

UP-TO 5-8805

MTH-45' WITH SLIDE-OUT INSTALLATION

From Y-7046 To 8-9339		Date:07/2024	PAGE:Y2-2210-00

HEATER & EVAPORATOR BLOWER - INSTALLATION

Item#	Part	Description	XLII 45	XLII MTH40	XLII MTH45	XLII MTH45E	NOTES
	450849P	MOTOR & BLOWER To 1-7456	1	1	1	1	A
	453700	MOTOR & BLOWER From 1-7457 To 3-8164	1	1	1	1	
	454049P	MOTOR & BLOWER From 4-8165	1				
	454049P	MOTOR & BLOWER From 4-8165 To 6-8805		1	1	1	
	Call order desk	MOTOR & BLOWER From 4-8165 To 6-8805			1		P S
	871008	. HOUSING FAN ASSY / HOUSING DEFLECTOR & BLOW To 1-7456	2	2	2	2	
	871209	. HOUSING FAN ASSY / HOUSING DEFLECTOR & BLO From 1-7457	1				
	871209	. HOUSING FAN ASSY / HOUSING DEFLECTOR & BLO From 1-7457 To 6-8805		1	1	1	
1	870828	. . HOUSING DEFLECTOR & BLOWER To 1-7456	1	1	1	1	
1	871210	. . HOUSING DEFLECTOR & BLOWER From 1-7457	1				
1	871210	. . HOUSING DEFLECTOR & BLOWER From 1-7457 To 6-8805		1	1	1	
2	870827	. . BLOWER WHEEL	1				
2	870827	. . BLOWER WHEEL To 6-8805		1	1	1	
NS	870879	. . DEFLECTOR / "J" SHAPE	1				
2	870879	. . DEFLECTOR / "J" SHAPE To 6-8805		1	1	1	
3	**Y2-2265-00**	**. MOTOR - EVAPORATOR - "PREVOST" - T-17**					
3	**Y2-2265-01**	**. MOTOR - EVAPORATOR - "PREVOST" - T-17 - 2 SPEEDS**					
NS	451131	. KEY SQ 3/16" x 3/16"x 2 7/8"	2	2	2	2	
NS	451173	. SHIM 1/8" TH.	AR	AR	AR	AR	
NS	451172	. SHIM .074" TH.	AR	AR	AR	AR	
NS	451124	. SHIM 3/8" TH.	AR	AR	AR	AR	
4	453336	. BASE ASSY To 1-7456	1	1	1	1	
4	453699	. BASE ASSY From 1-7457	1				
4	453699	. BASE ASSY From 1-7457 To 6-8805		1	1	1	
5	453287	. . SUPPORT To 1-7456	1	1	1	1	
5	453697	. . SUPPORT From 1-7457	1				
5	453697	. . SUPPORT From 1-7457 To 6-8805		1	1	1	
6	453286	. . SUPPORT To 1-7456	1	1	1	1	
6	453698	. . SUPPORT From 1-7457	1				
6	453698	. . SUPPORT From 1-7457 To 6-8805		1	1	1	
7	453283	. . BASE SUB ASSY	1				
7	453283	. . BASE SUB ASSY To 6-8805		1	1	1	
NS	500297	. . . NUT WD FLRET 5/16-24	4	4	4	4	H
NS	500296	. . . NUT WD FLRET 3/8-24	4	4	4	4	H
8	5001447	. . SCREW CAP HEX #10-24x5/8 PT SS BK	6	6	6	6	
9	5001180	. . NUT HEX NYRT #10-24 SS	6	6	6	6	
10	5001137	. . WASHER FL .203x.438x.050 SS	6	6	6	6	
11	506071	. . TAPE RUB ADH1 CC POL 1/8" x 1/2" x 50' / GREY 2520X	AR	AR	AR	AR	
NS	506207	. . TAPE RUB ADH1 CC POL 3/16" x 1" x 50' / GREY 2520X	AR	AR	AR	AR	
15	450967	FLEXIBLE DUCT 76MM HEIGHT To 1-7456	2	2	2	2	
15	453679	FLEXIBLE DUCT / HEIGHT 100MM From 1-7457	2				
15	453679	FLEXIBLE DUCT / HEIGHT 100MM From 1-7457 To 6-8805		2	2	2	

From Y-7046 To 8-9339		Date:07/2024	PAGE:Y2-2210-00

HEATER & EVAPORATOR BLOWER - INSTALLATION

Item#	Part	Description	XLII 45	XLII MTH40	XLII MTH45	XLII MTH45E	NOTES
16	500657	SCREW TC TR PH #10-24x1/2 Z050 To 1-7456	AR	AR	AR	AR	
16	500964	WASHER FL .203x.500x.047 Z050	AR	AR	AR	AR	
17	453680	RETAINER STRAP / "U" SHAPE 183MM X 215MM SS	2				
17	453680	RETAINER STRAP / "U" SHAPE 183MM X 215MM SS To 6-8805		2	2	2	
18	453681	RETAINER STRAP / "U" SHAPE 183MM X 40MM SS	2				
18	453681	RETAINER STRAP / "U" SHAPE 183MM X 40MM SS To 6-8805		2	2	2	
NS	506210	TAPE RUB ADH1 URE 1/2" x 3/4" x 20' / GREY 1820	AR	AR	AR	AR	
19	453689	HOOK ASSY	3	3	3	3	
20	502708	SCREW CAP HEX M5-0.8x35 SS	4	4	4	4	
21	502782	NUT HEX NYRT M5-0.8 Z050	4	4	4	4	
22	500539	NUT HEX NYRT M4-0.7 N500	3	3	3	3	
23	70314700	SCREW CAP HEX M4-0.7X45 SS	3	3	3	3	
30	502905	SCREW CAP HEX 5/16-24x1 G5 ZG603	4	4	4	4	
31	5001448	WASHER FL .343x.875x.062 SS18-8	4	4	4	4	
32	500261	WASHER FL .390x1.500x.083 N500	4	4	4	4	
60	5001446	SCREW CAP HEX 5/16-24x1 SS EMN	4	4	4	4	
61	500035	WASHER LO SPT .317x.586x.078 SS	4	4	4	4	
62	5001448	WASHER FL .343x.875x.062 SS18-8	4	4	4	4	
63	502723	WASHER FL .386x.750x.050 NYL	4	4	4	4	
64	504503	BUSHING, NYLON 5/16 DIA.	4	4	4	4	
65	452896	INSULATED PAD	1	1	1	1	
NS	454001	SUPPORT / SPEED CONTROL / W/SLIDE OUT To 3-8164			2		B
NS	502556	WASHER FL 4.3x9.0x0.8 SS To 3-8164			10		B
NS	502636	WASHER LO SPT 4.1x7.6x0.9 Z050 To 3-8164			10		B
NS	502685	SCREW CAP HEX M4-0.7x20 SS EMN To 3-8164			10		B
90	373994	HOUSING FAN ASSY / HOUSING DEFLECTOR & BLOW To 6-8805			1		
90	871334	. BLOWER ASSY W/FAN To 6-8805			1		
91	871333	. TRANSITION ADAPTOR HOSE To 6-8805			1		
91	504339	. RIVET POP DOME OE 1/8x3/8 SS To 6-8805			12		
91	374012	ANGLE SUPPORT To 6-8805			1		
91	504229	HOSE CLAMP / 6"1/2-8"1/2 SS / HS-100 To 6-8805			2		
92	871338	COUPLING 3/4" To 6-8805			1		
93	5061049	SPIDER 38 DURO 64 HYTREL To 6-8805			1		
94	871336	COUPLING 7/8" To 6-8805			1		
95	476039	STEP KEY To 6-8805			1		
96	5001282	SCREW SET HEXS CUP 1/4-20x5/8 To 6-8805			3		
97	454915	SUPPORT To 6-8805			1		S
98	454916	SUPPORT To 6-8805			1		S
		A) THIS PART NUMBER INCLUDE MOTOR, SEE PAGE Y2-2265-00					

From Y-7046 To 8-9339		Date:07/2024	PAGE:Y2-2210-00

HEATER & EVAPORATOR BLOWER - INSTALLATION

Item#	Part	Description	XLII 45	XLII MTH40	XLII MTH45	XLII MTH45E	NOTES
		B) FIXED ON MOTOR BASE WITH "SLIDE-OUT" ONLY					
		H) WELDED					
		S) WITH "SLIDE OUT"					
		P) CALL ORDER DESK FOR SPECIFIC APPLICATION (V.I.N.)					

From 6-8806 To 8-9339		Date:07/2024	PAGE:Y2-2210-01
HEATER & EVAPORATOR BLOWER - INSTALLATION			

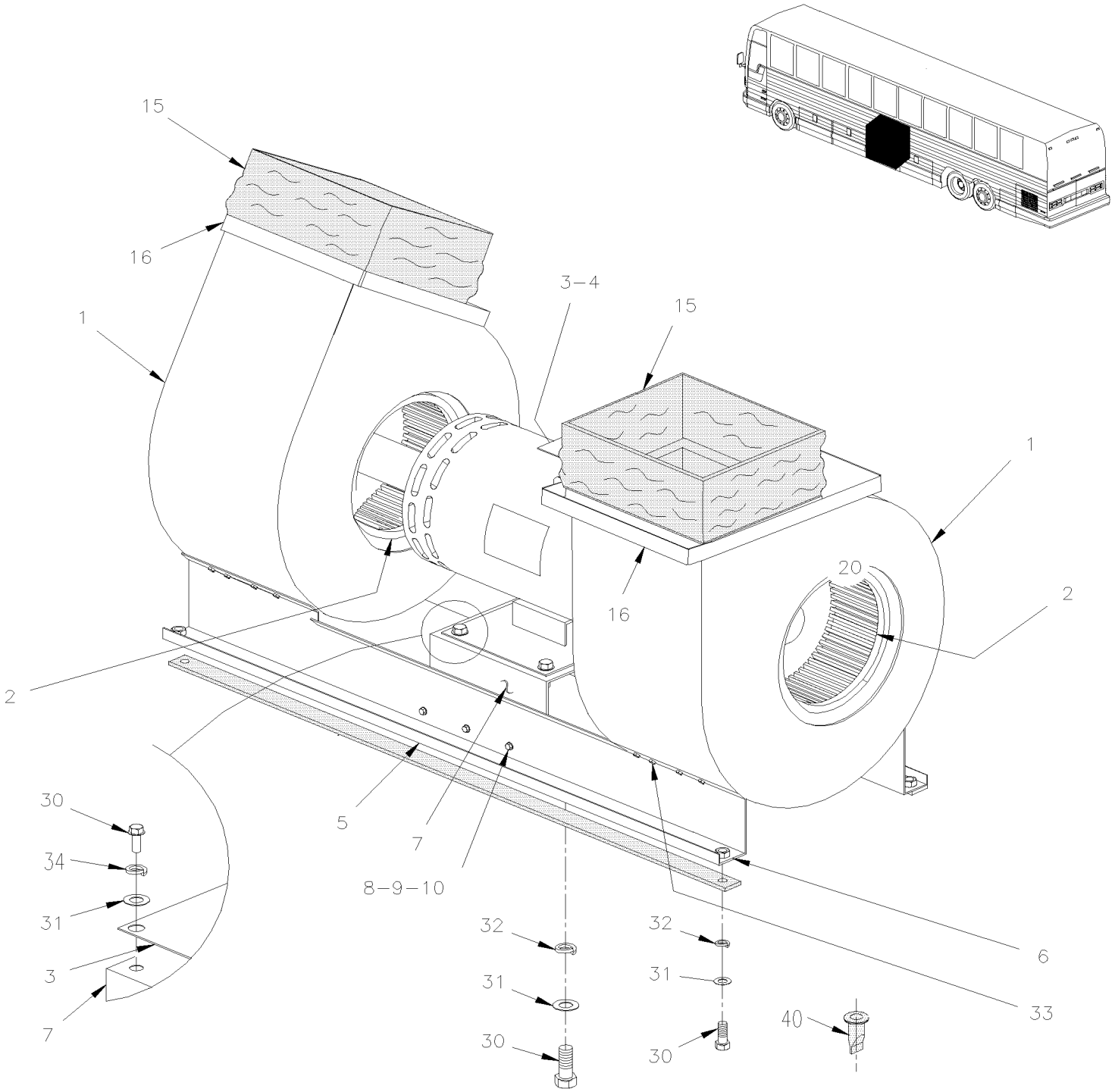

From 6-8806 To 8-9339		Date:07/2024	PAGE:Y2-2210-01

HEATER & EVAPORATOR BLOWER - INSTALLATION

Item#	Part	Description	XLII 45	XLII MTH40	XLII MTH45	XLII MTH45E	NOTES
1	871306	HOUSING ASSY W/BLOWER WHEEL		2	2	2	
1	871308	. HOUSING ASSY, GALVANISED		1	1	1	
2	870956	. BLOWER WHEEL		1	1	1	
3	452085	KEY 3/16 X 82 MM		2	2	2	
4	**Y2-2265-01**	**MOTOR - EVAPORATOR - "PREVOST" - T-17 - 2 SPEEDS**					
5	453990	SUPPORT		1	1	1	
6	453995	SUPPORT		1	1	1	
7	457414	BASE SUB ASSY		1	1	1	
8	5001447	SCREW CAP HEX #10-24x5/8 PT SS BK		6	6	6	
9	5001180	NUT HEX NYRT #10-24 SS		6	6	6	
10	5001137	WASHER FL .203x.438x.050 SS		6	6	6	
15	453986	FLEXIBLE DUCT / HEIGHT 140MM		2	2	2	
16	453992	TRANSITION ADAPTOR FLEXIBLE DUCT		2	2	2	
NS	504729	CLAMP HOSE SS/CR 203-279		2	2	2	
NS	500957	SCREW TP BDG PH #10x3/4 N500		10	10	10	
30	502780	SCREW CAP HEX M8-1.25x25 SS BK		AR	AR	AR	
31	5001448	WASHER FL .343x.875x.062 SS18-8		AR	AR	AR	
32	500261	WASHER FL .390x1.500x.083 N500		AR	AR	AR	
33	502868	SCREW TC TR PH #10-16x1/2 N500		AR	AR	AR	
34	500035	WASHER LO SPT .317x.586x.078 SS		AR	AR	AR	
40	453981	DRAIN BOOT 1" I.D. W/GROOVE 1.5 x 35MM I.D. x 62MM		4	4	4	

From Y-7046 To 8-9339		Date:07/2024	PAGE:Y2-2210-10
WATER PUMP & FILTER - INSTALLATION			

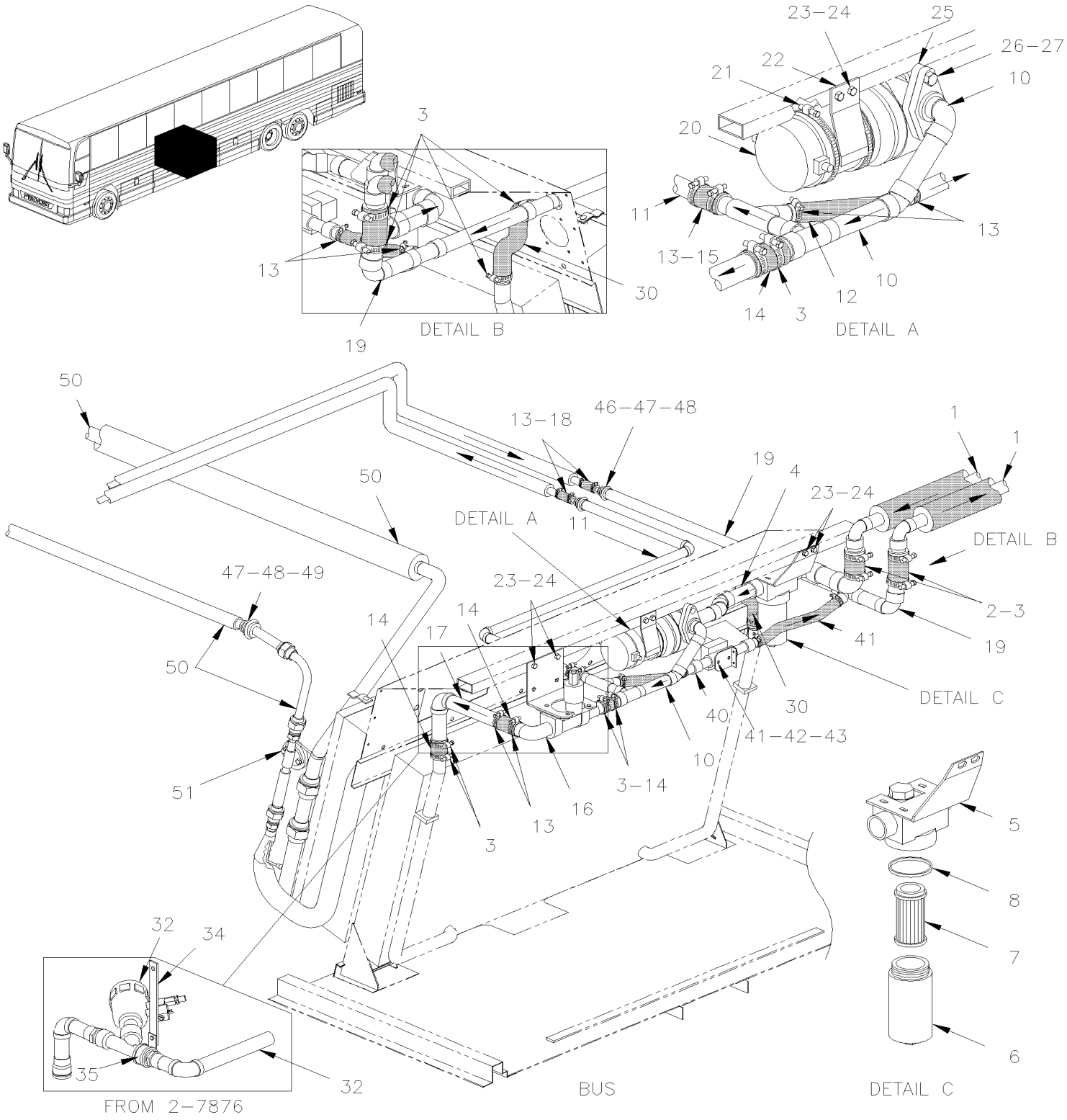

From Y-7046 To 8-9339		Date:07/2024	PAGE:Y2-2210-10
WATER PUMP & FILTER - INSTALLATION			

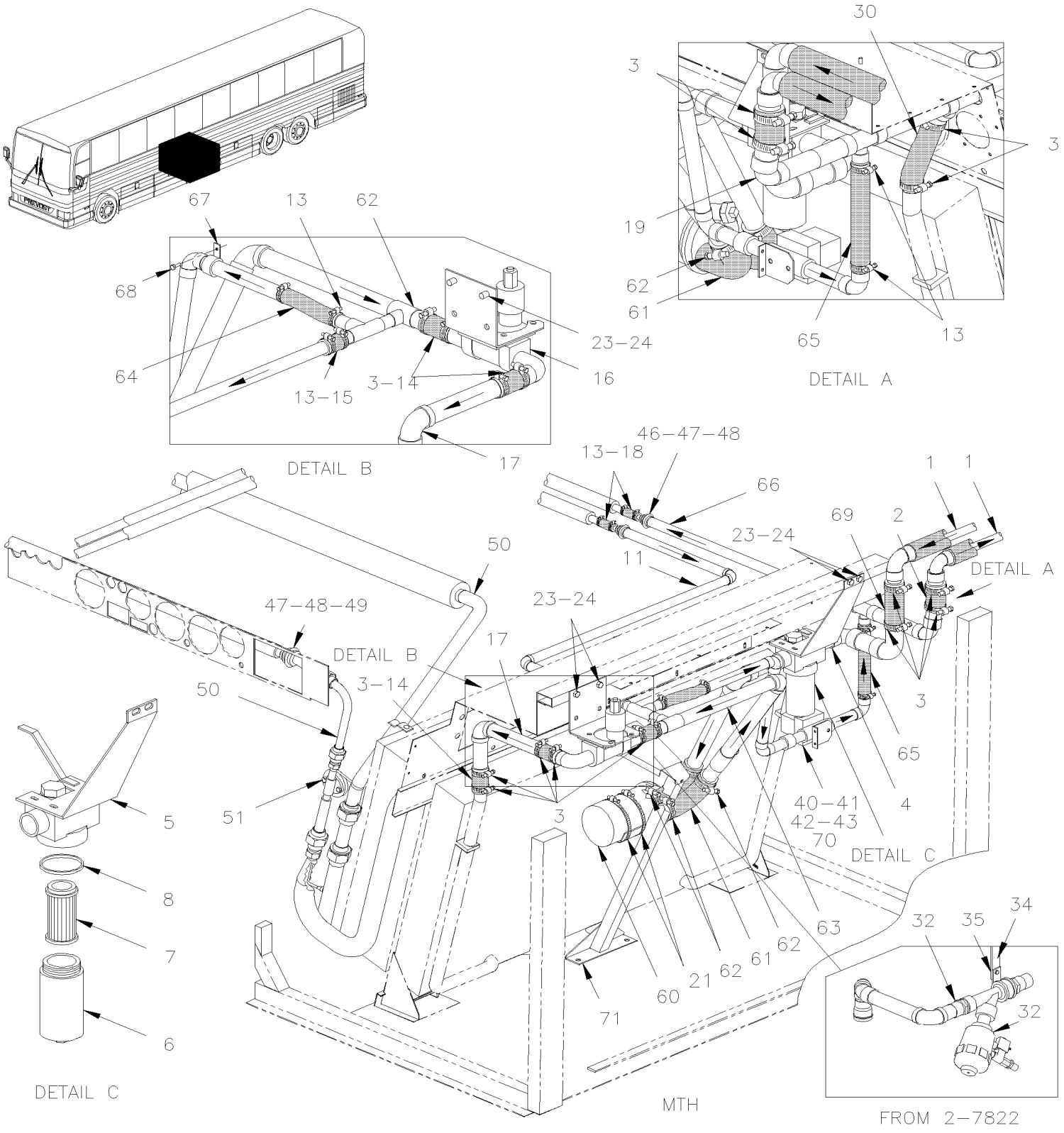

From Y-7046 To 8-9339		Date:07/2024	PAGE:Y2-2210-10

WATER PUMP & FILTER - INSTALLATION

Item#	Part	Description	XLII 45	XLII MTH40	XLII MTH45	XLII MTH45E	NOTES
1	**Y2-2222-00**	**HEATER LINE REAR SECTION - BUS To 2-7764**	1				
1	**Y2-2222-01**	**HEATER LINE REAR SECTION - BUS From 2-7765 To 3-8164**	1				
1	**Y2-2222-02**	**HEATER LINE REAR SECTION - BUS From 4-8165**	1				
1	**Y2-2222-30**	**HEATER LINE REAR SECTION - MTH To 3-8164**		1	1	1	
1	**Y2-2222-31**	**HEATER LINE REAR SECTION - MTH From 4-8165**		1	1	1	
2	371855	HOSE 1 3/8" I.D. 3"	2				
2	371855	HOSE 1 3/8" I.D. 3"		1	1	1	
3	504657	HOSE CLAMP / 1"1/16-2" C.T. 9424	AR	AR	AR	AR	
4	373684	FILTER ASSY W/TUBE	1				
4	373013	FILTER ASSY W/TUBE			1		
4	373333	FILTER ASSY W/TUBE		1		1	
4	373874	FILTER ASSY W/TUBE			1		D
4	374002	FILTER ASSY W/TUBE	1				E
5	372862	. SUPPORT / WATER FILTER	1				
5	372994	. SUPPORT / WATER FILTER		1	1	1	F
5	871028	. FILTER "PARKER" ASSY	1	1	1	1	
6	871043	. . BOWL	1	1	1	1	
7	871029	. . CARTRIDGE	1	1	1	1	
8	871044	. . SEAL BOWL	2	2	2	2	
10	373683	PIPE ASSY / WATER PUMP OUTLET To 2-7875	1				B
10	373891	PIPE ASSY / WATER PUMP OUTLET From 2-7876 To 4-8205	1				B
10	374046	PIPE ASSY / WATER PUMP OUTLET From 4-8206	1				B
10	373685	PIPE ASSY / WATER PUMP OUTLET To 2-7875	1		1		C
10	373890	PIPE ASSY / WATER PUMP OUTLET From 2-7876 To 4-8205	1		1		C
10	374048	PIPE ASSY / WATER PUMP OUTLET From 4-8206	1		1		C
10	374001	PIPE ASSY / WATER PUMP OUTLET	1				E
11	371746	TUBE ASSY / TO DRIVER'S HEATER To 4-8205	1	1	1	1	
11	374047	TUBE ASSY / TO DRIVER'S HEATER From 4-8206	1	1	1	1	
12	372191	HOSE / PIPE & BYPASS / 7/8" I.D. 10"	2				
13	504646	HOSE CLAMP / 11/16"-1"1/4 / C.T. 9412	4				
14	051383	HOSE / W/CENTRAL A/C SYSTEM / 1 3/8" I.D. X 150MM	2		2		
15	372053	HOSE 7/8" I.D. X 6.5" To 4-8205	1		1		
15	372191	HOSE / PIPE & BYPASS / 7/8" I.D. 10" From 4-8206	1		1		
16	**Y2-2207-00**	**WATER VALVE - W/MAIN HEATER**					
17	371745	PIPE ASSY / WATER VALVE OUTLET & HEATER To 2-7821	1	1	1	1	
18	371532	HOSE 7/8" I.D. 6"	2	2	2	2	
19	373308	RETURN JCT TUBE ASSY / W/BYPASS VALVE	1				
20	**Y2-2206-00**	**WATER PUMP #871052 & #871204**					
21	504025	HOSE CLAMP / 2"5/16-3"1/4 SS / HS-44	2	2	2	2	
22	373429	SUPPORT / WATER PUMP	1				
23	500536	SCREW TP HEXW SLT #14x1 ZP	6				
24	500473	WASHER LO SPT .262x.489x.062 Z050	6				

From Y-7046 To 8-9339		Date:07/2024	PAGE:Y2-2210-10

WATER PUMP & FILTER - INSTALLATION

Item#	Part	Description	XLII 45	XLII MTH40	XLII MTH45	XLII MTH45E	NOTES
25	870441	GASKET PUMP INLET & OUTLET	1				
NS	871207	QUAD RING	1				A
26	500497	SCREW CAP HEXS 3/8-16x3/4 ZP	4				
27	500478	WASHER LO SPT .380x.683x.094 Z050	4				
30	372131	ELBOW 90° REDUCER 1 1/8" I.D.W/3 1/4" x 1 3/8 I.D. W 5 1/4" C/C	1				
32	**Y2-2207-01**	**WATER VALVE - W/2 WAYS**					
34	373884	ATTACHMENT WATER VALVE From 2-7822		1	1	1	
34	373893	ATTACHMENT WATER VALVE From 2-7876	1				
34	373876	ATTACHMENT WATER VALVE			1		D
35	952641	CLAMP P STL ZP RUB 34.9 ID From 2-7822		1	1	1	
40	**Y2-2207-20**	**WATER VALVE - BYPASS W/WATER HEATER**					
41	373311	SUPPORT / BY-PASS VALVE	1		1		
42	500162	SCREW CAP HEX 1/4-20x1/2 G5 Z050	1				
43	502709	WASHER FL .260x.687x.050 XLN BK	1				
44	500638	SCREW TP PAN PH #8x1/2 Z050	2				
45	500470	WASHER LO SPT .193x.334x.047 Z050	2				
46	504383	CUFF END BELLOW / 7/8" I.D. x 1 1/2" x 2 1/4"	2				
47	504022	HOSE CLAMP / 3/4"-1"3/4 SS / HS-20	4				
48	451075	PROTECTOR HOSE SPLIT / 7/8" O.D. x 3"	2				
49	504384	CUFF END BELLOW / 1 1/4" I.D. x 1 3/4" x 4"	2				
50	**Y2-2222-10**	**A/C & HEATING LINE FRONT SECTION**					
51	**Y2-2208-00**	**A/C EXPANSION VALVE**					
60	**Y2-2206-50**	**WATER PUMP #871032**					
61	372131	ELBOW 90° REDUCER 1 1/8" I.D.W/3 1/4" x 1 3/8 I.D. W 5 1/4" C/C		2	2	2	
62	504451	HOSE CLAMP STEPLESS SPRING SS / OETIKER / 1.3-1.6		2	2	2	
63	373744	PIPE ASSY / WATER PUMP OUTLET To 2-7821		1	1	1	B
63	373051	PIPE ASSY / WATER PUMP OUTLET To 2-7821		1	1	1	C
63	373869	PIPE ASSY / WATER PUMP OUTLET From 2-7822			1		C D
64	373134	HOSE /WATER VALVE & HEATER / 7/8" I.D. 229MM		1	1	1	
65	371554	HOSE 7/8" I.D. X 7.5"			1		
65	371533	HOSE 7/8" I.D. X 5.25"		1		1	
66	373749	RETURN JCT TUBE ASSY / W/BYPASS VALVE To 2-7821			1		
66	372136	RETURN JCT TUBE ASSY / W/O BYPASS VALVE			1		
66	373875	RETURN JCT TUBE ASSY To 2-7909			1		D
66	373915	RETURN JCT TUBE ASSY From 2-7910			1		D
67	952633	CLAMP / 7/8" I.D.			1		
68	500642	SCREW TP PAN PH #10x3/4 Z050			3		
69	371858	HOSE 1 3/8" I.D. 7"		1	1	1	
70	373748	SUPPORT / BY-PASS VALVE			1		
71	482616	SUPPORT WATER PUMP		1	1	1	

From Y-7046 To 8-9339		Date:07/2024	PAGE:Y2-2210-10

WATER PUMP & FILTER - INSTALLATION

Item#	Part	Description	XLII 45	XLII MTH40	XLII MTH45	XLII MTH45E	NOTES
		A) INLET SIDE					
		B) WITH BY-PASS WATER VALVE					
		C) WITHOUT BYPASS WATER VALVE					
		D) USE WITH "SLIDE-OUT"					
		E) WITH ROTRON PUMP					
		F) USE ALSO FOR FEED LINE WITH MTH-40 & MTH-45 ENT					

From Y-7046 To 8-9339		Date:07/2024	PAGE:Y2-2222-02
HEATER LINE REAR SECTION - BUS			

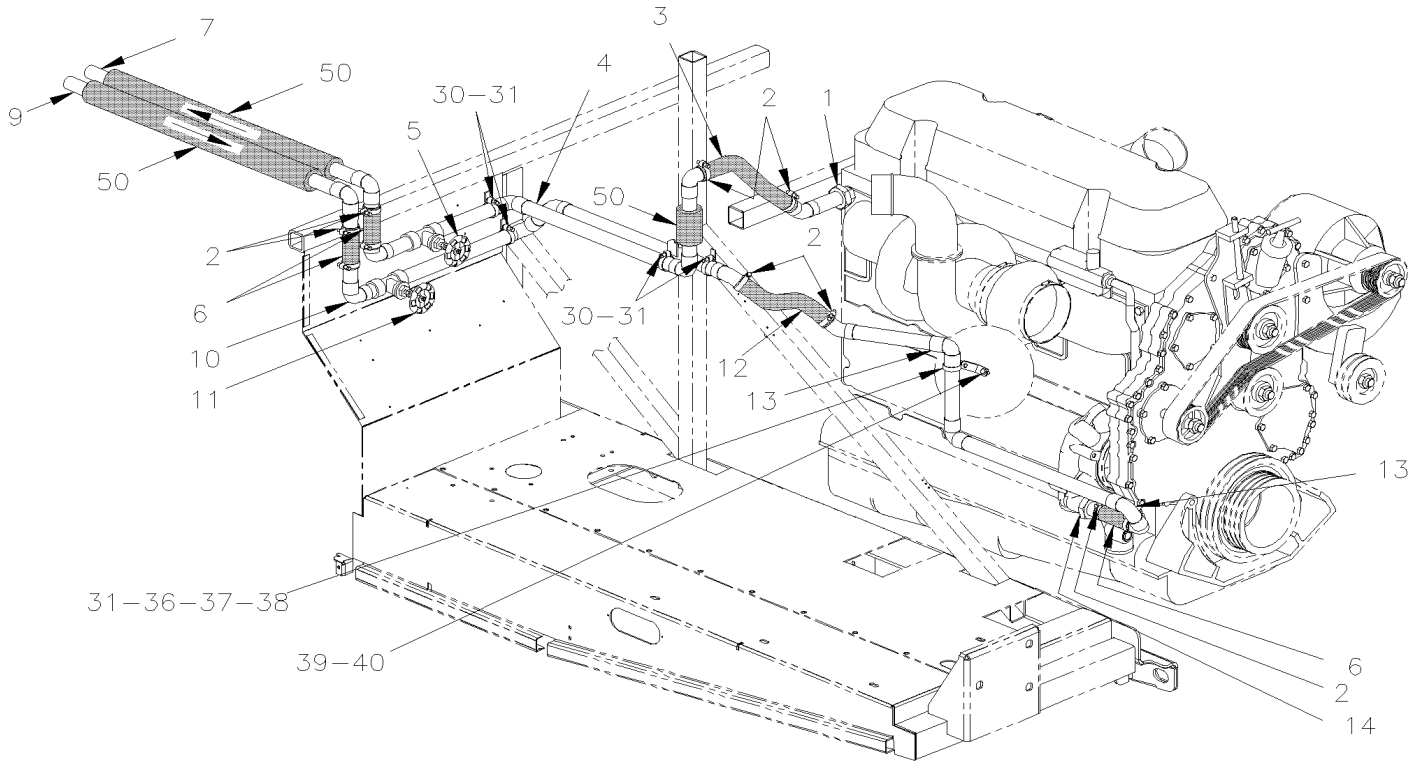

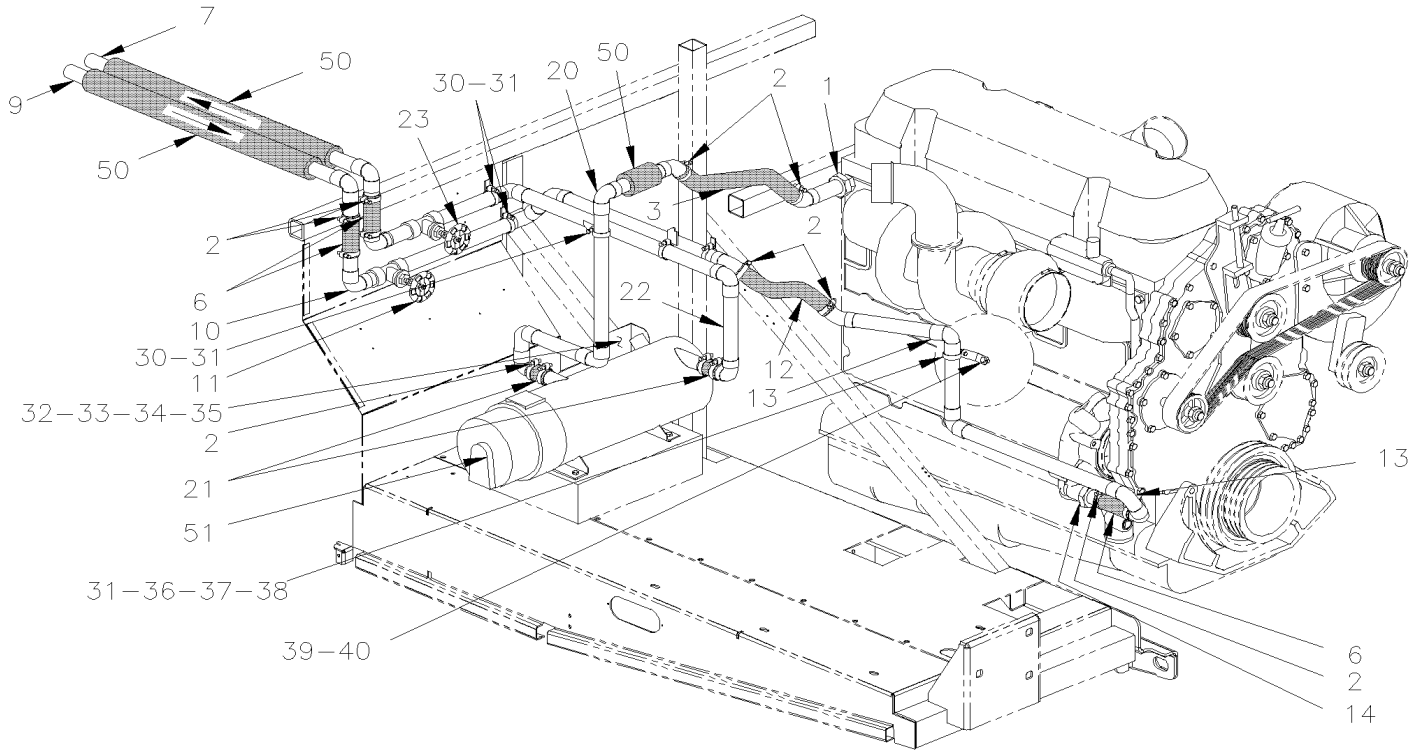

From Y-7046 To 8-9339		Date:07/2024	PAGE:Y2-2222-02

HEATER LINE REAR SECTION - BUS

Item#	Part	Description	XLII 45	XLII MTH40	XLII MTH45	XLII MTH45E	NOTES
1	373888	HOSE ADAPTOR ELBOW 45° 1 3/8" X 1" NPT / CYLINDER HEAD EXIT	1				
2	504657	HOSE CLAMP / 1"1/16-2" C.T. 9424	AR				
3	503392	HOSE SILICONE 4PLY 1 3/8" I.D. x 4'	1				
4	Call order desk	PIPE ASSY HEATING / FEED LINE	1				P
5	501861	. GATE VALVE 1 ¼" (WELDED)	1				
6	371855	HOSE 1 3/8" I.D. 3"	2				
7	Call order desk	PIPE ASSY HEATING / FEED LINE	2				P
9	Call order desk	PIPE ASSY HEATING / RETURN LINE /W/"SLIDE-OUT"	1				P
10	373857P	PIPE ASSY HEATING / RETURN LINE	1				
11	501861	. GATE VALVE 1 ¼" (WELDED)	1				
12	503392	HOSE SILICONE 4PLY 1 3/8" I.D. x 4'	1				
13	Call order desk	PIPE ASSY HEATING / RETURN LINE To 5-8592	1				P A
13	374153P	PIPE ASSY HEATING / RETURN LINE From 5-8593	1				
14	373894	ADAPTOR STRAIGHT 86MM / WATER PUMP INLET	1				
20	373861P	PIPE ASSY / "WEBASTO" / FEED LINE	1				
20	Call order desk	PIPE ASSY / "PROHEAT" / FEED LINE From 5-8453	1				P
21	373483	HOSE REDUCER / 1 1/2" I.D.x1 3/8" I.D. x 76MM	2				
22	373852P	PIPE ASSY TO HEATING / FEED LINE	1				
22	Call order desk	PIPE ASSY TO HEATING / FEED LINE "/ W/"PROHEAT" From 5-8453	1				P
23	501861	. GATE VALVE 1 ¼" (WELDED)	1				
30	500642	SCREW TP PAN PH #10x3/4 Z050	AR				
31	952641	CLAMP P STL ZP RUB 34.9 ID	AR				
32	500946	SCREW TP BDG PH #8x1/2 N500	1				
33	955271	SCREW CAP HEX M6-1.0x16 G8.8 ZG603	1				
34	502853	WASHER LO SPT 6.1x11.8x1.6 N500	3				
35	500855	WASHER FL .188x.438x.049 N500	1				
36	502841	NUT HEX NYRT M5-0.8 N500	1				
37	502746	SCREW MA PAN PH M5-0.8x20 SS BK	1				
38	500804	WASHER FL .203x.500x.047 N500	1				
39	500820	SCREW CAP HEX M8-1.25x16 G10.9 N500	1				
NS	502889	WASHER LO SPT 8.1x12.7x2.0 N500	1				
40	373905	SUPPORT, PIPE HEATER LINE RETURN To 5-8592	1				
40	374154	SUPPORT, PIPE HEATER LINE RETURN From 5-8593	1				
50	506242	PIPE INSULATING / 1 3/8" I.D. X 1/2" TH. X 72 / APT13812	AR				
51	**871202**	**WATER HEATER - "SPHEROS" 100,000 B.T.U.**					
NS	871370	ELBOW 90° SHORT / EXHAUST "PROHEAT" From 5-8453	1				
NS	871371	ELBOW 90° LONG / EXHAUST "PROHEAT" From 5-8453	1				
NS	540061	U-CLAMP / 2 3/4" I.D. From 5-8453	1				
		A) FOR PRODUCT IMPROVEMENT IT SUPPERSEEDED BY 374153P					

From Y-7046 To 8-9339		Date:07/2024	PAGE:Y2-2222-02

HEATER LINE REAR SECTION - BUS

Item#	Part	Description	XLII 45	XLII MTH40	XLII MTH45	XLII MTH45E	NOTES
		P) CALL ORDER DESK FOR SPECIFIC APPLICATION (V.I.N.)					

From 6-8806 To 8-9339		Date:07/2024	PAGE:Y2-2210-11
WATER PUMP - INSTALLATION			

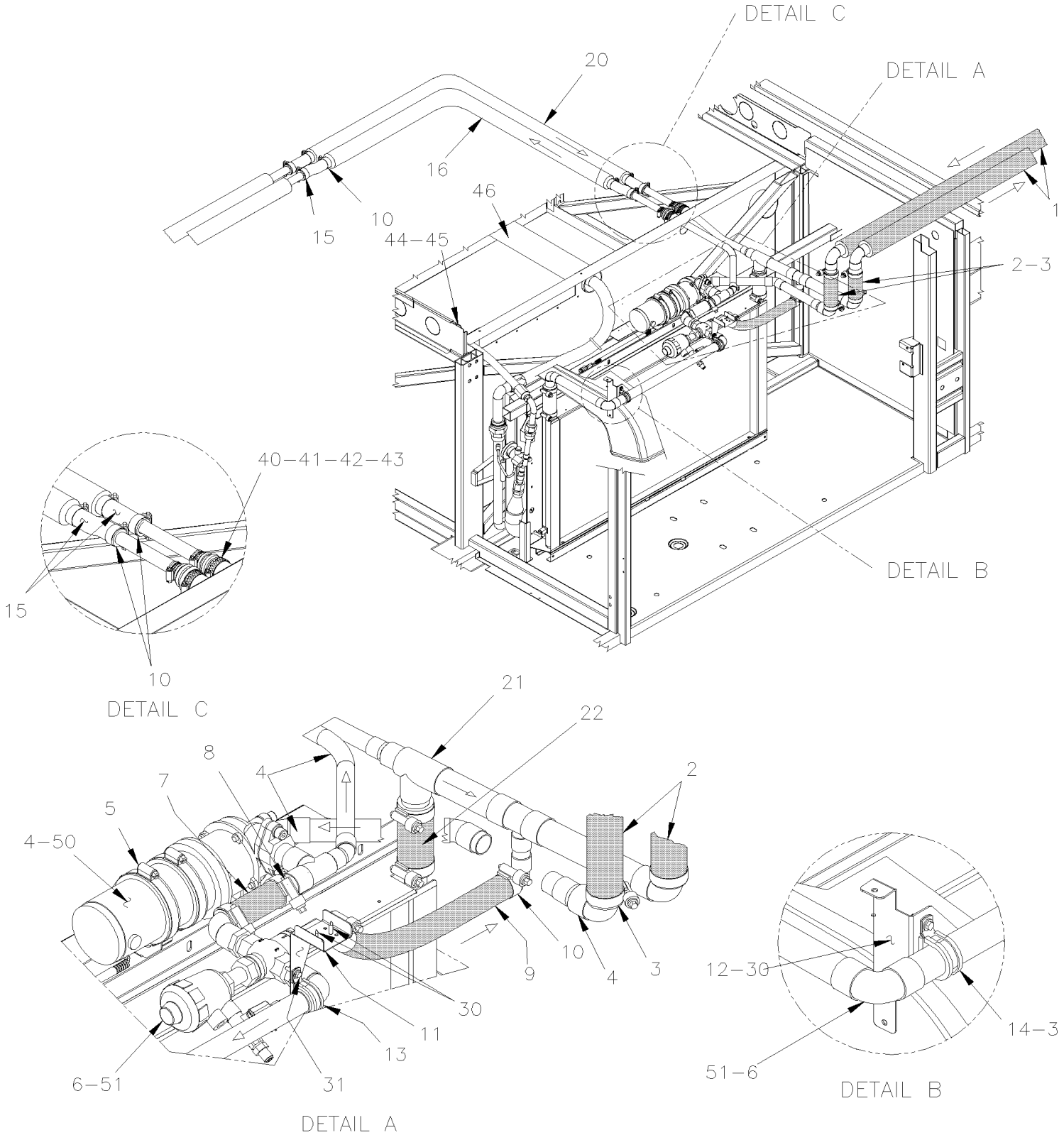

From 6-8806 To 8-9339		Date:07/2024	PAGE:Y2-2210-11

WATER PUMP - INSTALLATION

Item#	Part	Description	XLII 45	XLII MTH40	XLII MTH45	XLII MTH45E	NOTES
1	**Y2-2222-31**	**HEATER LINE REAR SECTION - MTH**	1	1	1	1	
2	503392	HOSE SILICONE 4PLY 1 3/8" I.D. x 4'		AR	AR	AR	
3	504657	HOSE CLAMP / 1"1/16-2" C.T. 9424		AR	AR	AR	
4	Call order desk	PUMP WATER ASSY W/PIPE & CONNECTOR / SEALLESS MODEL		1	1	1	P
. NS	374864	. COPPER TUBE, OUTPUT ASSY		1	1	1	
. NS	374865	. COPPER TUBE, INPUT ASSY		1	1	1	
5	504235	HOSE CLAMP / 3"9/16"-4"1/2 SS / HS-64		2	2	2	
NS	506728	TAPE RUB ADH1 NEO 1/4" x 3/4" x 10' / BLACK		AR	AR	AR	
6	Call order desk	WATER VALVE ASSY W/PIPE & SUPPORT			1		P
. NS	374281	. ADAPTOR 7/8" I.D. WELDED x 3/4" B.P.T. MALE			1		
. NS	374282	. ADAPTOR 1 1/8" I.D. WELDED x 3/4" B.P.T. MALE			2		
6	374198P	WATER VALVE ASSY W/PIPE & SUPPORT		1		1	
7	503652	HOSE SILICONE 2PLY 1 1/8" I.D. x 3'		AR	AR	AR	
8	504658	HOSE CLAMP / 13/16"-1"3/4 / C.T. 9420		AR	AR	AR	
9	503651	HOSE SILICONE 2PLY 7/8" I.D. x 3'		AR	AR	AR	
10	504646	HOSE CLAMP / 11/16"-1"1/4 / C.T. 9412		AR	AR	AR	
11	374217	SUPPORT WATER VALVE BACKWARD		1	1	1	
12	374194	SUPPORT WATER VALVE		1	1	1	
12	374195	SUPPORT WATER VALVE FORWARD		1	1	1	
13	952639	CLAMP / 1"1/4 I.D.		1	1	1	
14	952637	CLAMP / 1"1/16 I.D.		1	1	1	
15	371532	HOSE 7/8" I.D. 6"		1	1	1	
16	Call order desk	PIPE ASSY / 1428MM BACKWARD SECTION		1	1	1	P
20	Call order desk	PIPE ASSY / 1432MM BACKWARD SECTION		1	1	1	P
21	374124	PIPE ASSY / RETURN LINE / W/BYPASS VALVE OR W/OUT BY PASS		1	1	1	
22	051383	HOSE / W/CENTRAL A/C SYSTEM / 1 3/8" I.D. X 150MM		1	1	1	
30	500957	SCREW TP BDG PH #10x3/4 N500		AR	AR	AR	
31	500588	SCREW CAP HEX M4-0.7x20 G8.8 Z050		2	2	2	
NS	500438	WASHER FL .187x.437x.050 Z050		2	2	2	
NS	500590	NUT HEX NYRT M4-0.7 Z050		2	2	2	
40	504383	CUFF END BELLOW / 7/8" I.D. x 1 1/2" x 2 1/4"		2	2	2	
41	451075	PROTECTOR HOSE SPLIT / 7/8" O.D. x 3"		2	2	2	
42	504022	HOSE CLAMP / 3/4"-1"3/4 SS / HS-20		AR	AR	AR	
43	504016	CABLE TIE / 5/16" X 14"1/2		AR	AR	AR	
44	504024	HOSE CLAMP / 1"13/16"-2"3/4 SS / HS-36		1	1	1	
45	504384	CUFF END BELLOW / 1 1/4" I.D. x 1 3/4" x 4"		1	1	1	
46	454238	TUBE PVC / 3" x 1137MM		1	1	1	
50	**Y2-2206-01**	**WATER PUMP #871342 SEALLESS**					
51	**Y2-2207-02**	**WATER VALVE - W/3 WAYS BY-PASS**					
52	**Y2-2270-00**	**RECEIVER TANK & FILTER DRYER**					
53	**Y2-2208-00**	**A/C EXPANSION VALVE**					
54	**Y2-2205-01**	**HEATER & EVAPORATOR COIL - INSTALLATION**					

From 6-8806 To 8-9339		Date:07/2024	PAGE:Y2-2210-11

WATER PUMP - INSTALLATION

Item#	Part	Description	XLII 45	XLII MTH40	XLII MTH45	XLII MTH45E	NOTES
		P) CALL ORDER DESK FOR SPECIFIC APPLICATION (V.I.N.)					

From Y-7046 To 8-9339		Date:07/2024	PAGE:Y2-2210-20
WATER PUMP & FILTER - W/SMALL A/C			

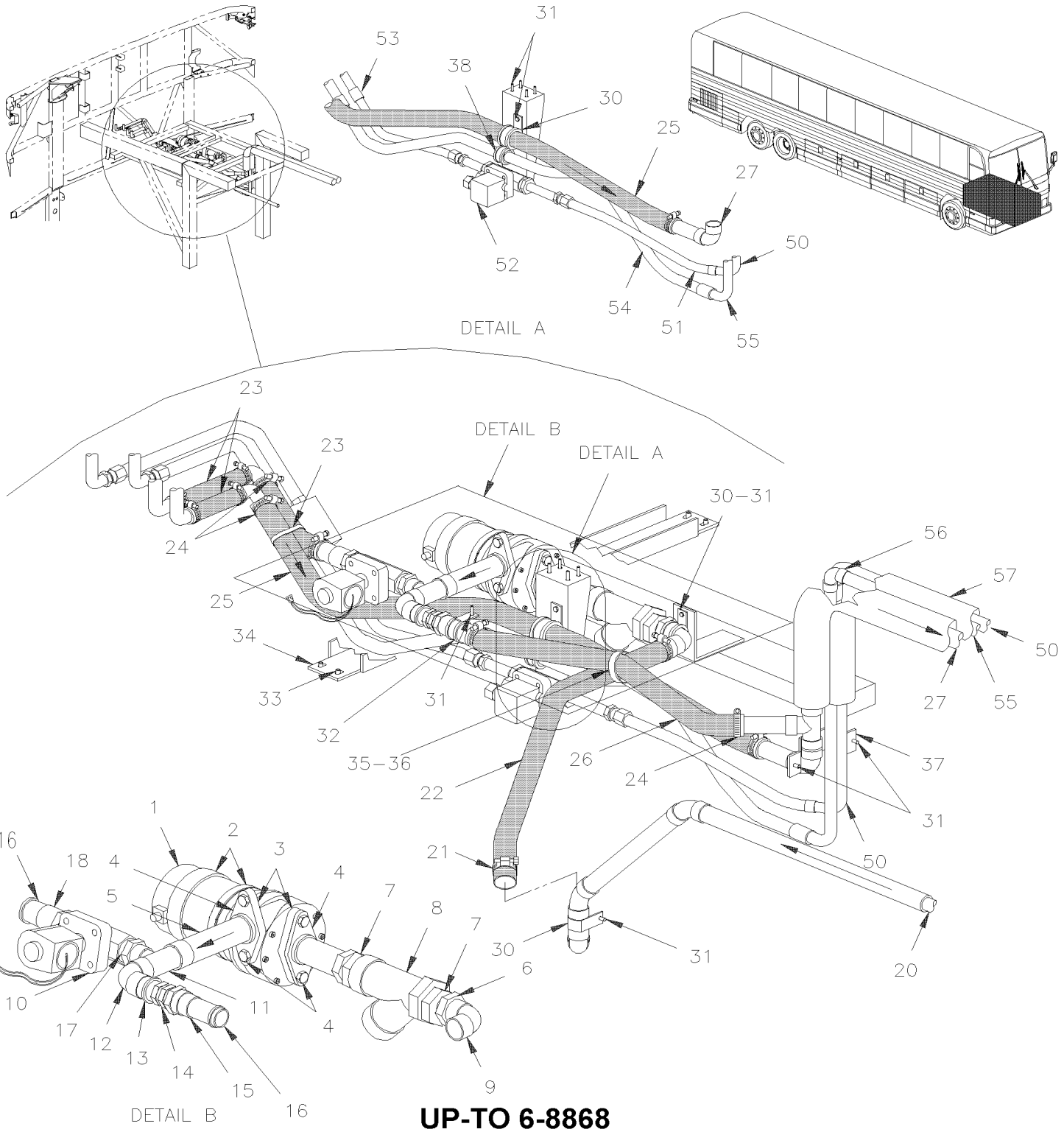

UP-TO 6-8868

From Y-7046 To 8-9339		Date:07/2024	PAGE:Y2-2210-20
WATER PUMP & FILTER - W/SMALL A/C			

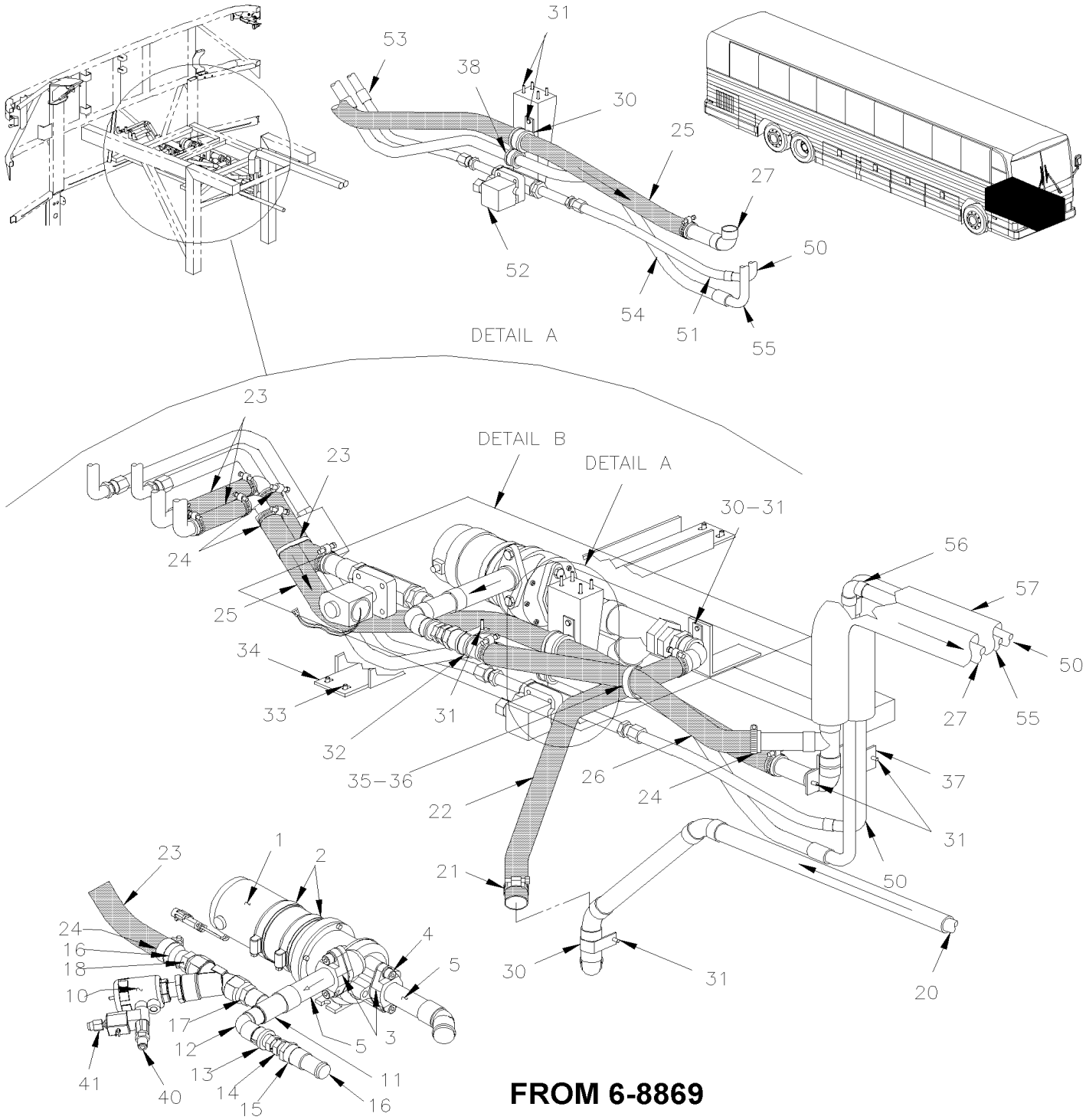

FROM 6-8869

From Y-7046 To 8-9339		Date:07/2024	PAGE:Y2-2210-20

WATER PUMP & FILTER - W/SMALL A/C

Item#	Part	Description	XLII 45	XLII MTH40	XLII MTH45	XLII MTH45E	NOTES
	Call order desk	WATER PUMP ASSY W/STRAINER & VALVE To 4-8228		1	1	1	P
	Call order desk	WATER PUMP ASSY W/STRAINER & VALVE From 4-8229 To 6-8868		1	1	1	P
	Call order desk	WATER PUMP ASSY W/WATER VALVE From 6-8869			1	1	P
1	**Y2-2206-00**	**WATER PUMP #871052 & #871204 To 4-8205**					
1	**Y2-2206-01**	**WATER PUMP #871342 SEALLESS From 4-8206**					
2	504026	HOSE CLAMP / 2"13/16-3"3/4 SS / HS-52		2	2	2	
NS	506728	TAPE RUB ADH1 NEO 1/4" x 3/4" x 10' / BLACK		AR	AR	AR	
3	870862	FLANGE ADAPTOR / W/GASKET To 1-7409		2	2	2	
3	871206	FLANGE ADAPTOR / W/QUAD RING From 1-7410		2	2	2	
NS	870441	GASKET PUMP INLET & OUTLET To 1-7409		2	2	2	
NS	871207	QUAD RING From 1-7410 To 4-8228		2	2	2	
NS	870441	GASKET PUMP INLET & OUTLET From 4-8229		2	2	2	
4	500695	SCREW CAP HEXS 3/8-16x1 ZP To 4-8228		4	4	4	
4	5001580	SCREW CAP HEXS 3/8-16x7/8 From 4-8229		4	4	4	
NS	500478	WASHER LO SPT .380x.683x.094 Z050		4	4	4	
5	503199	COPPER TUBE 1.125" O.D.x .050" x 240"		AR	AR	AR	
6	501794	ADAPTER / COPPER @ PIPE / 1Mx3/4NPT-M To 4-8228		2	2	2	
6	501553	ADAPTER / COPPER @ PIPE / 1Fx1NPT-M From 4-8229 To 6-8868		2	2	2	
7	501922	ADAPTER / PIPE FITTING / 3/4NPT-Fx1 1/4NPT-M BR To 4-8228		2	2	2	
8	870807	STRAINER FILTER, WATER 1" 1/4" N.P.T. To 4-8228		1	1	1	
8	871348	STRAINER FILTER, WATER 1" N.P.T. From 4-8229		1	1	1	
9	373617	ELBOW 90° W/BEAD To 6-8805		1	1	1	
9	372675	ELBOW 45° W/BEAD From 6-8806		1	1	1	
10	**Y2-2207-10**	**WATER VALVE - W/DRIVER'S HEATER**					
10	**Y2-2207-01**	**WATER VALVE - W/2 WAYS**					
11	501963	UNION TEE / COPPER TUBE / 1Fx3/4Fx3/4F		1	1	1	
12	501217	STREET ELBOW 90º SHORT RADIUS / COPPER TUBE / 3/4Mx3/4F		1	1	1	
13	501889	ADAPTER / COPPER @ PIPE / 3/4Mx1/2NPT-F		1	1	1	
14	870727	CHECK VALVE 1/2 NPT		1	1	1	
15	501568	ADAPTER / COPPER @ PIPE / 3/4Fx1/2NPT-F		1	1	1	
16	503198	COPPER TUBE .875" O.D. x .045" x 240"		AR	AR	AR	
17	501896	ADAPTER / COPPER @ PIPE / 3/4Fx3/4NPT-M		1	1	1	
18	501866	ADAPTER / COPPER @ PIPE / 3/4Fx3/4NPT-M		1	1	1	
20	Call order desk	PIPE ASSY / 6472MM To 5-8561		1			P
20	Call order desk	PIPE ASSY / 2905MM BACKWARD SECTION From 5-8562		1			P
20	Call order desk	PIPE ASSY / 3496MM FORWARD SECTION From 5-8562		1			P
20	Call order desk	PIPE ASSY / 7356MM To 5-8561			1		P
20	Call order desk	PIPE ASSY / 3289MM BACKWARD SECTION From 5-8562			1		P
20	Call order desk	PIPE ASSY / 3996MM FORWARD SECTION From 5-8562			1		P
20	Call order desk	PIPE ASSY / 7996MM To 5-8561				1	P
20	Call order desk	PIPE ASSY / 4429MM BACKWARD SECTION From 5-8562				1	P
20	Call order desk	PIPE ASSY / 3496MM FORWARD SECTION From 5-8562				1	P

From Y-7046 To 8-9339		Date:07/2024	PAGE:Y2-2210-20

WATER PUMP & FILTER - W/SMALL A/C

Item#	Part	Description	XLII 45	XLII MTH40	XLII MTH45	XLII MTH45E	NOTES
21	504658	HOSE CLAMP / 13/16"-1"3/4 / C.T. 9420		2	2	2	
22	373618	HOSE 1 1/8" I.D. X 605MM To 6-8868		1	1	1	
22	374220	HOSE 1 1/8" I.D. X 670MM From 6-8869		1	1	1	
23	**Y2-2230-00**	**DEFROSTER - INSTALLATION**					
24	504646	HOSE CLAMP / 11/16"-1"1/4 / C.T. 9412		AR	AR	AR	
25	373619	HOSE 7/8" I.D. X 855MM		1	1	1	
26	373674	HOSE 7/8" I.D. X 390MM		1	1	1	
. NS	503684	. HOSE SILICONE 1 PLY 7/8" I.D. x 100' / S.L.		AR	AR	AR	
27	Call order desk	PIPE ASSY / 6512MM To 5-8561		1			P
27	Call order desk	PIPE ASSY / 2963MM BACKWARD SECTION From 5-8562		1			P
27	Call order desk	PIPE ASSY / 3469MM FORWARD SECTION From 5-8562		1			P
27	Call order desk	PIPE ASSY / 7382MM To 5-8561			1		P
27	Call order desk	PIPE ASSY / 2963MM BACKWARD SECTION From 5-8562			1		P
27	Call order desk	PIPE ASSY / 4221MM FORWARD SECTION From 5-8562			1		P
27	Call order desk	PIPE ASSY / 8036MM To 5-8561				1	P
27	Call order desk	PIPE ASSY / 4037MM BACKWARD SECTION From 5-8562				1	P
27	Call order desk	PIPE ASSY / 3919MM FORWARD SECTION From 5-8562				1	P
30	952639	CLAMP / 1"1/4 I.D.		AR	AR	AR	
31	500642	SCREW TP PAN PH #10x3/4 Z050		AR	AR	AR	
32	952635	CLAMP / 1" I.D.		AR	AR	AR	
33	502526	SCREW TC BDG PH #12-24x3/4 Z050		4	4	4	
34	172355	SUPPORT / VALVE		1	1	1	
35	504637	CABLE TIE / 3/16" x 13"		AR	AR	AR	
36	504586	WASHER FL SPACER .450x.625x.875 NYL		AR	AR	AR	
37	452906	SUPPORT		1	1	1	
38	952631	CLAMP / 3/4" I.D.		AR	AR	AR	
40	641332	MALE CONNECTOR / PUSH-IN FITTING / #4x1/4NPT-M BR From 6-8869			1	1	
41	642028	MALE CONNECTOR / PUSH-IN FITTING / 6MM x M5-0.8 BR From 6-8869			1	1	
50	453319	PIPE ASSY		1	1	1	
51	453333	HOSE ASSY / PIPE & VALVE #6 205MM		1	1	1	
. NS	507278	. O-RING / ORS FITTING / #4 NEO		2	2	2	
51	455212	HOSE ASSY / PIPE & VALVE #6 205MM		1	1	1	S
. NS	507278	. O-RING / ORS FITTING / #4 NEO		2	2	2	S
52	**Y2-2208-10**	**REFRIGERANT SOLENOID VALVE**					
53	453331	HOSE ASSY / VALVE & EVAPORATOR / #6 250MM To 3-8164		1	1	1	
. NS	507278	. O-RING / ORS FITTING / #4 NEO To 3-8164		2	2	2	
53	455210	HOSE ASSY / VALVE & EVAPORATOR / #6 250MM To 3-8164		1	1	1	S
. NS	507278	. O-RING / ORS FITTING / #4 NEO To 3-8164		2	2	2	S
53	454109	HOSE ASSY / VALVE & EVAPORATOR / #6 205MM		1	1	1	A
. NS	507278	. O-RING / ORS FITTING / #4 NEO		2	2	2	A
53	455290	HOSE ASSY / VALVE & EVAPORATOR / #6 205MM		1	1	1	A S
. NS	507278	. O-RING / ORS FITTING / #4 NEO		2	2	2	A S

From Y-7046 To 8-9339		Date:07/2024	PAGE:Y2-2210-20

WATER PUMP & FILTER - W/SMALL A/C

Item#	Part	Description	XLII 45	XLII MTH40	XLII MTH45	XLII MTH45E	NOTES
54	453332	HOSE ASSY / EXPANSION VALVE OUTLET / #10 820MM To 3-8164		1	1	1	
. NS	507344	. O-RING / ORS FITTING / #10 NEO To 3-8164		2	2	2	
54	455211	HOSE ASSY / EXPANSION VALVE OUTLET / #10 820MM To 3-8164		1	1	1	S
. NS	507344	. O-RING / ORS FITTING / #10 NEO To 3-8164		2	2	2	S
54	454107	HOSE ASSY / EXPANSION VALVE OUTLET / #10 875MM		1	1	1	A
. NS	507344	. O-RING / ORS FITTING / #10 NEO		2	2	2	A
54	455289	HOSE ASSY / EXPANSION VALVE OUTLET / #10 875MM		1	1	1	A S
. NS	507344	. O-RING / ORS FITTING / #10 NEO		2	2	2	A S
55	Call order desk	PIPE		1		1	P
55	Call order desk	PIPE ASSY			1		P
56	453704	PIPE		1	1	1	
57	506283	PIPE INSULATING / 1 5/8" I.D. X 1/2" TH. X 72 / APT15812		1	1	1	
		A) ALSO USE WITH "SELTEC" RETROFIT					
		S) SERVICE					
		P) CALL ORDER DESK FOR SPECIFIC APPLICATION (V.I.N.)					

From Y-7046 To 6-8906		Date:07/2024	PAGE:Y2-2220-00
UNDER FLOOR AIR DUCTING			

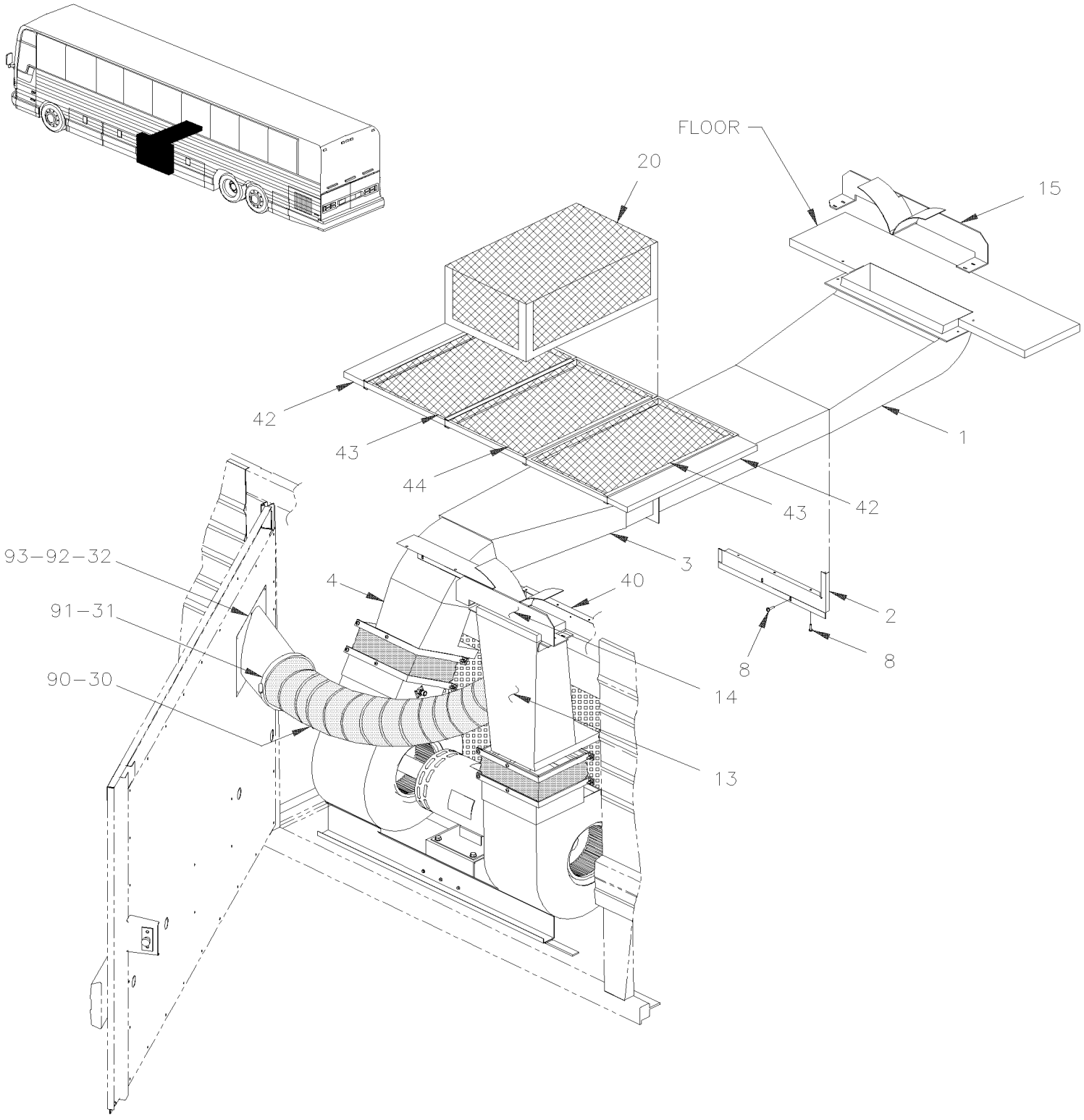

From Y-7046 To 6-8906		Date:07/2024	PAGE:Y2-2220-00
UNDER FLOOR AIR DUCTING			

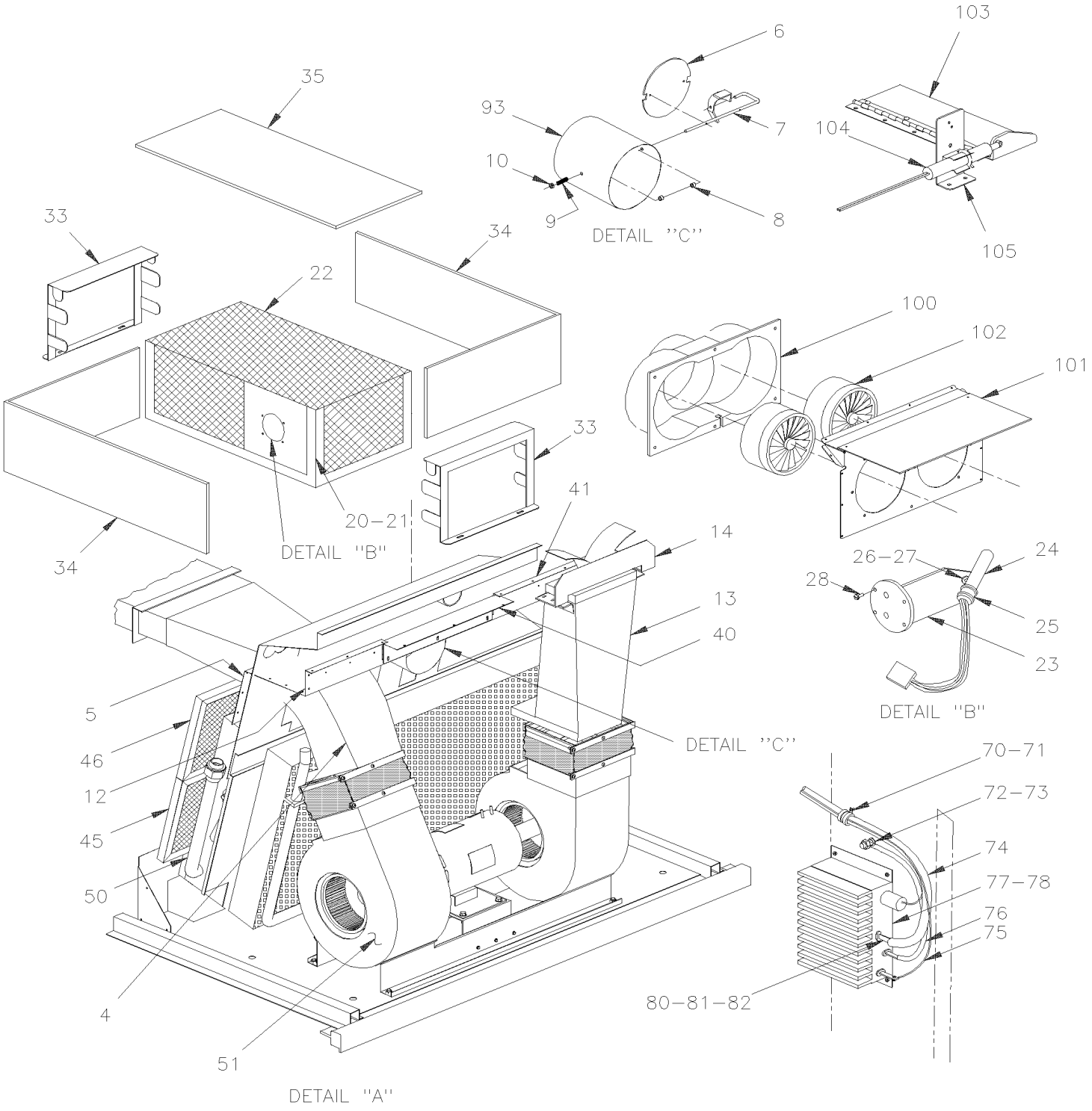

From Y-7046 To 6-8906		Date:07/2024	PAGE:Y2-2220-00

UNDER FLOOR AIR DUCTING

Item#	Part	Description	XLII 45	XLII MTH40	XLII MTH45	XLII MTH45E	NOTES
1	452923	DUCT ASSY To 6-8805		1		1	
1	453055	DUCT ASSY To Y-7207	1		1		
1	453603	DUCT ASSY From Y-7208	1				
1	453603	DUCT ASSY From Y-7208 To 6-8805			1		
2	452922	CLOSING PANEL ASSY	1				
2	452922	CLOSING PANEL ASSY To 6-8805		1	1	1	
3	452806	DUCT ASSY	1				
3	452806	DUCT ASSY To 6-8805		1	1	1	
4	450856	DUCT , L.H. OUTLET EVAPORATOR FAN	1				
4	450856	DUCT , L.H. OUTLET EVAPORATOR FAN To 6-8805		1	1	1	
5	453457	PANEL ASSY W/DAMPER / UPPER EVAPORATOR To 5-8644	1				D
5	Call order desk	PANEL ASSY W/DAMPER / UPPER EVAPORATOR From 5-8645	1				P
5	453458	PANEL ASSY W/DAMPER / UPPER EVAPORATOR To 6-8805		1	1	1	
5	485415	PANEL ASSY W/O DAMPER / UPPER EVAPORATOR / "SPECIAL OPTION" HYDRO QC	1				
6	452943	. DAMPER	1				
6	452943	. DAMPER To 6-8805		1	1	1	
7	452945	. PIVOT	1				
7	452945	. PIVOT To 6-8805		1	1	1	
NS	504107	. RIVET POP DOME OE 1/8x5/16 AL	1	1	1	1	
8	504083	. SNAP BUSHING / .250x.468.406	2				
8	504083	. SNAP BUSHING / .250x.468.406 To 6-8805		1	1	1	
9	502146	. SPRING COMPRESSION / .437 O.D. x .750 x .047	2				
9	502146	. SPRING COMPRESSION / .437 O.D. x .750 x .047 To 6-8805		1	1	1	
10	500770	. NUT HEX STO 1/4-20 Z050	1	1	1	1	
NS	500440	. WASHER FL .250x.562x.065 Z050	1	1	1	1	
13	452878	DUCT, R.H. OUTLET / EVAPORATOR FAN	1				
13	452878	DUCT, R.H. OUTLET / EVAPORATOR FAN To 6-8805		1	1	1	
14	453362	DEFLECTOR ASSY / EVAPORATOR SIDE	1				
14	453362	DEFLECTOR ASSY / EVAPORATOR SIDE To 6-8805		1	1	1	
15	453363	DEFLECTOR ASSY / CONDENSOR SIDE	1				
15	453363	DEFLECTOR ASSY / CONDENSOR SIDE To 6-8805		1	1	1	
20	453541	BOX ASSY / AIR RETURN To 1-7493	1				
20	453629	BOX ASSY / AIR RETURN From 1-7494	1				
20	453629	BOX ASSY / AIR RETURN From 1-7494 To 2-7877		1	1	1	
20	453791	. TEMPERATURE SENSOR ASSY W/SUPPORT From 2-7878		1	1	1	A
21	453032	. BASE / AIR RETURN	1				
21	453032	. BASE / AIR RETURN To 2-7877		1	1	1	
22	453031	. GRILL / AIR RETURN BOX	1				
22	453789	. GRILL / AIR RETURN From 2-7878		1	1	1	A
23	453033	. SUPPORT / TEMPERATURE SENSOR	1				
23	453033	. SUPPORT / TEMPERATURE SENSOR To 2-7877		1	1	1	
23	453792	. SUPPORT TERMISTOR From 2-7878		1	1	1	A

From Y-7046 To 6-8906		Date:07/2024	PAGE:Y2-2220-00

UNDER FLOOR AIR DUCTING

Item#	Part	Description	XLII 45	XLII MTH40	XLII MTH45	XLII MTH45E	NOTES
24	563026	. SENSOR THERMISTOR ASSY ("KEYSTONE") To 1-7493	1	1	1	1	
24	563063	. SENSOR THERMISTOR ASSY / TEMPERATURE / ("DELPHI") From 1-7494	1	1	1	1	
25	952624	. CLAMP / 1/4" I.D.	1	1	1	1	
26	500387	. SCREW MA RND PH #10-24x3/4 Z050	1	1	1	1	
27	500786	. NUT HEX #10-24 Z050	1	1	1	1	
28	500638	SCREW TP PAN PH #8x1/2 Z050	2	2	2	2	
30	452988	HOSE 6" I.D. 38"	1	1	1	1	
31	504324	HOSE CLAMP / 4"1/2-6"1/2 SS / HS-96	1	1	1	1	
32	452947	HOSE ADAPTOR, EVAPORATOR DOOR	1	1	1	1	
33	457420	SUPPORT RETURN AIR FILTER / "SPECIAL OPTION" HYDRO QC	2				
34	871377	FILTER ASSY RECIRCULATING ¼" X 6" X 27 1/8" / "SPECIAL OPTION" HYDRO QC	2				
35	871378	FILTER ASSY RECIRCULATING ¼" X9 3/8" X 17 3/4 / "SPECIAL OPTION" HYDRO QC	1				
40	482219	CLOSING PANEL ASSY To 6-8805		1	1	1	
41	482035	SLIDING TRACK / BACKWARD / 354MM To 6-8805		1	1	1	
42	482047	PANEL ASSY W/SLIDING TRACK To 6-8805		1	1	1	
43	482049	FILTER ASSY W/SLIDING TRACK & RIVET To 6-8805		1	1	1	
44	871034	FILTER 13" x 21" To 6-8805		1	1	1	
45	373337	FILTER LOWER 10" X 37"	1				
46	373336	FILTER UPPER 10" X 37"	1				
47	482034	SLIDING TRACK / FORWARD / 250MM To 6-8805		1	1	1	
50	**Y2-2205-00**	**HEATER & EVAPORATOR COIL - INSTALLATION**					
51	**Y2-2210-00**	**HEATER & EVAPORATOR BLOWER - INSTALLATION**					
70	952627	CLAMP / 1/2" I.D. To 4-8212		AR	AR	AR	
71	500638	SCREW TP PAN PH #8x1/2 Z050 To 4-8212		AR	AR	AR	
72	500998	NUT HEX 1/2-13 BR To 4-8212		1	1	1	
73	500857	WASHER LO INT .512x.900x.045 Z050 To 4-8212		1	1	1	
74	063841	CABLE / SPEED CONTROL & MOTOR #0A To 4-8212		1	1	1	
75	063840	CABLE / SPEED CONTROL & MOTOR #166B To 4-8212		1	1	1	
76	063625	CABLE / GROUND & SPEED CONTROL #0 To 4-8212		1	1	1	
77	871086	CONTROL SPEED To 4-8212		1	1	1	
77	454001	SUPPORT / SPEED CONTROL / W/SLIDE OUT To 4-8212			2		B
77	502556	WASHER FL 4.3x9.0x0.8 SS To 4-8212			10		B
77	502636	WASHER LO SPT 4.1x7.6x0.9 Z050 To 4-8212			10		B
77	502685	SCREW CAP HEX M4-0.7x20 SS EMN To 4-8212			10		B
78	500535	SCREW TP CAP HEX #14x3/4 Z050 To 4-8212		4	4	4	
80	502531	SCREW CAP HEX M6-1.0x16 G8.8 Z050 To 4-8212		3	3	3	
81	502621	NUT HEX STO M6-1.0 Z050 To 4-8212		3	3	3	
82	500440	WASHER FL .250x.562x.065 Z050 To 4-8212		3	3	3	
90	373999	HOSE 4" I.D. X 960MM To 6-8805			1		C
91	504235	HOSE CLAMP / 3"9/16"-4"1/2 SS / HS-64 To 6-8805			2		C
92	871337	HOSE ADAPTOR, EVAPORATOR DOOR To 6-8805			1		C
93	871332	ELBOW 20 DEG REDUCER / 156MM TO 100MM To 6-8805			1		C

From Y-7046 To 6-8906		Date:07/2024	PAGE:Y2-2220-00

UNDER FLOOR AIR DUCTING

Item#	Part	Description	XLII 45	XLII MTH40	XLII MTH45	XLII MTH45E	NOTES
93	682484	TAPE ALUMINUM ADH1 .005" x 3" x 300' ALUMINUM FSK3" To 6-8805			AR		C
100	453872	FRESCH AIR From 5-8645	1				E
101	453873	SUPPORT AXIAL FAN From 5-8645	1				E
102	871361	AXIAL FAN ASSY 12/28V / 230CFM From 5-8645	2				E
103	453887	FRESCH AIR DAMPER ASSY From 5-8645	1				E F
104	405661	SUPPORT ACTUATOR From 5-8645	1				E F
105	373415	ACTUATOR ASSY From 5-8645	1				E F
NS	453892	KIT, RETROFIT FRESCH AIR DAMPER	1				
		A) THIS MOUNTING IT FLAT ON FLOOR					
		B) FIXED ON MOTOR BASE WITH "SLIDE-OUT" ONLY					
		C) WITH "SLIDE OUT" ONLY					
		D) FOR PRODUCT IMPROVMENT, ASK KIT #4538927					
		E) THOSE PARTS ARE ALSO INCLUDED IN KIT #4538927					
		F) THOSE PARTS ARE LOCATED BACK OF MIRROR IN LAVATORY					
		P) CALL ORDER DESK FOR SPECIFIC APPLICATION (V.I.N.)					

From 6-8806 To 8-9339		Date:07/2024	PAGE:Y2-2220-01
UNDER FLOOR AIR DUCTING			

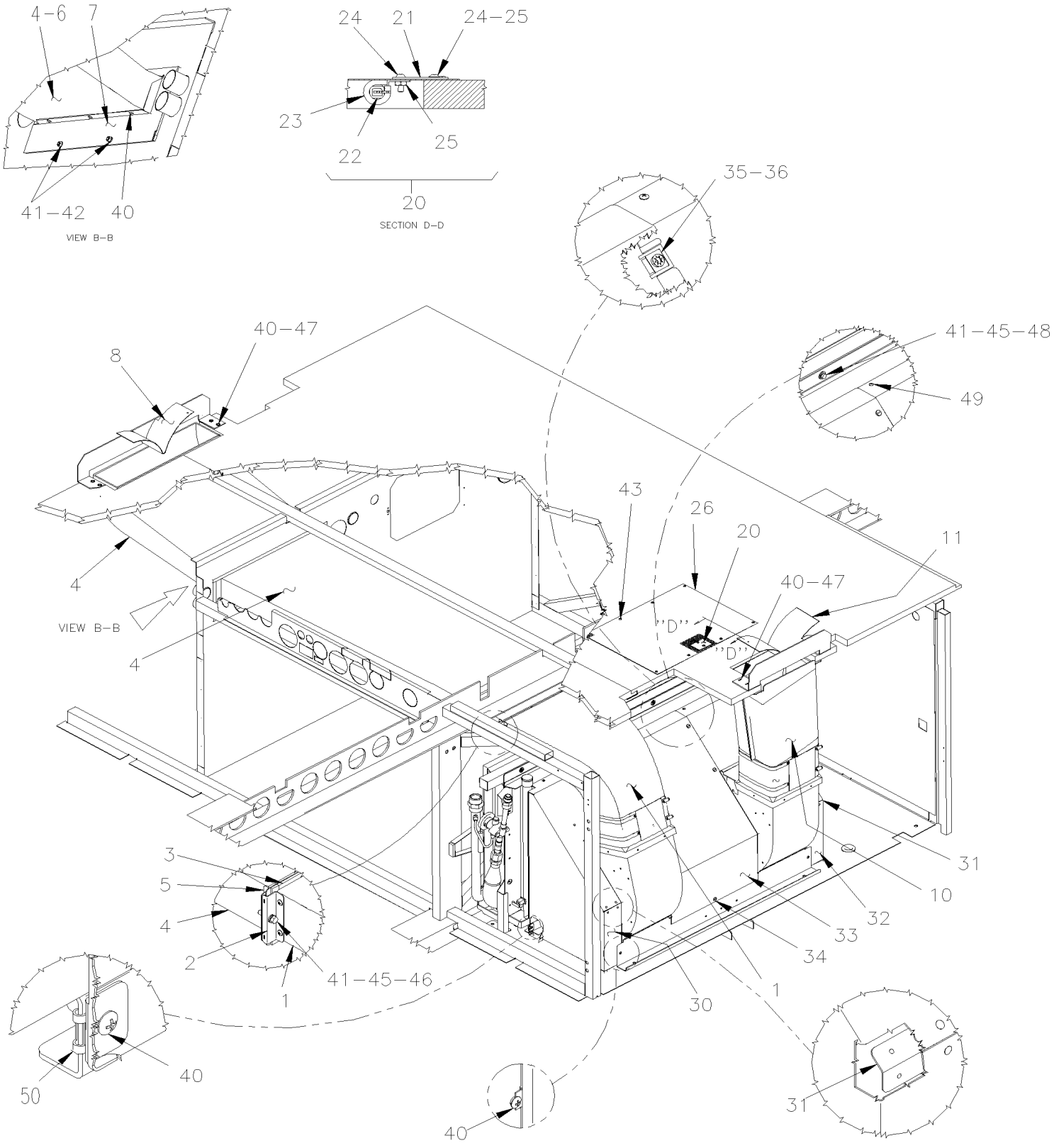

From 6-8806 To 8-9339		Date:07/2024	PAGE:Y2-2220-01
UNDER FLOOR AIR DUCTING			

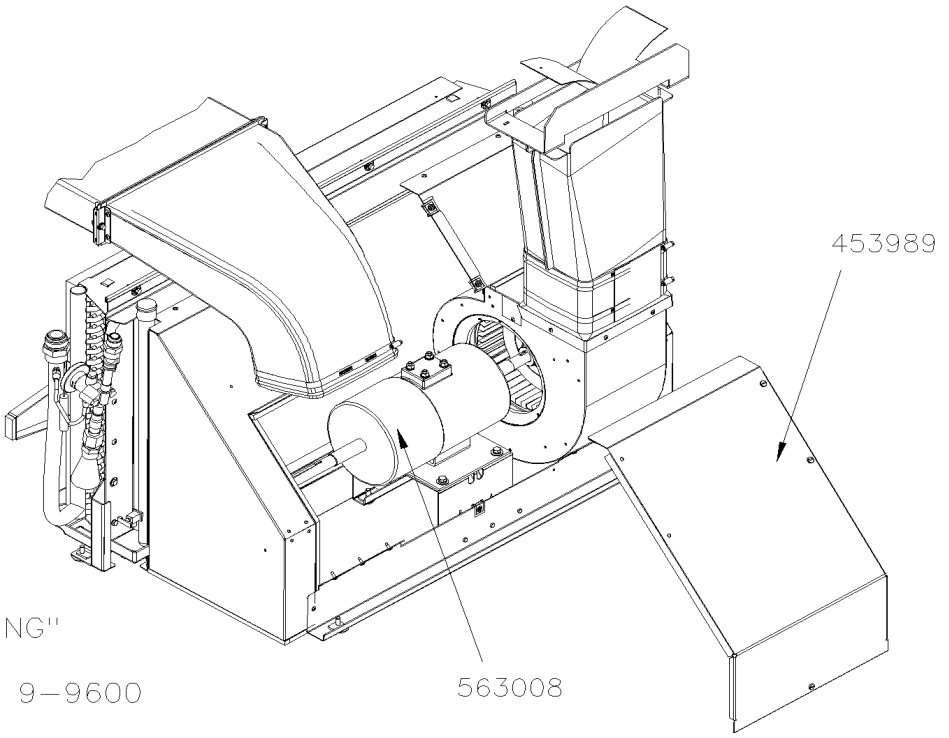

WARNING'' – ''WARNING'' –''WARNING''

FOR VEHICULE FROM 6–8806 TO 9–9600

IF YOU REPLACE THE EVAPORATOR MOTOR # 563008 WITH THE BRUSHLESS # 563586 YOU HAVE TO REPLACE # 453989 TO GIVE A CLEARENCE INSTALLATION FOR THE NEW MOTOR. THE NEW CENTRAL PLENUM COVER # 454671P WITH # 454648 CENTRAL SUPPORT

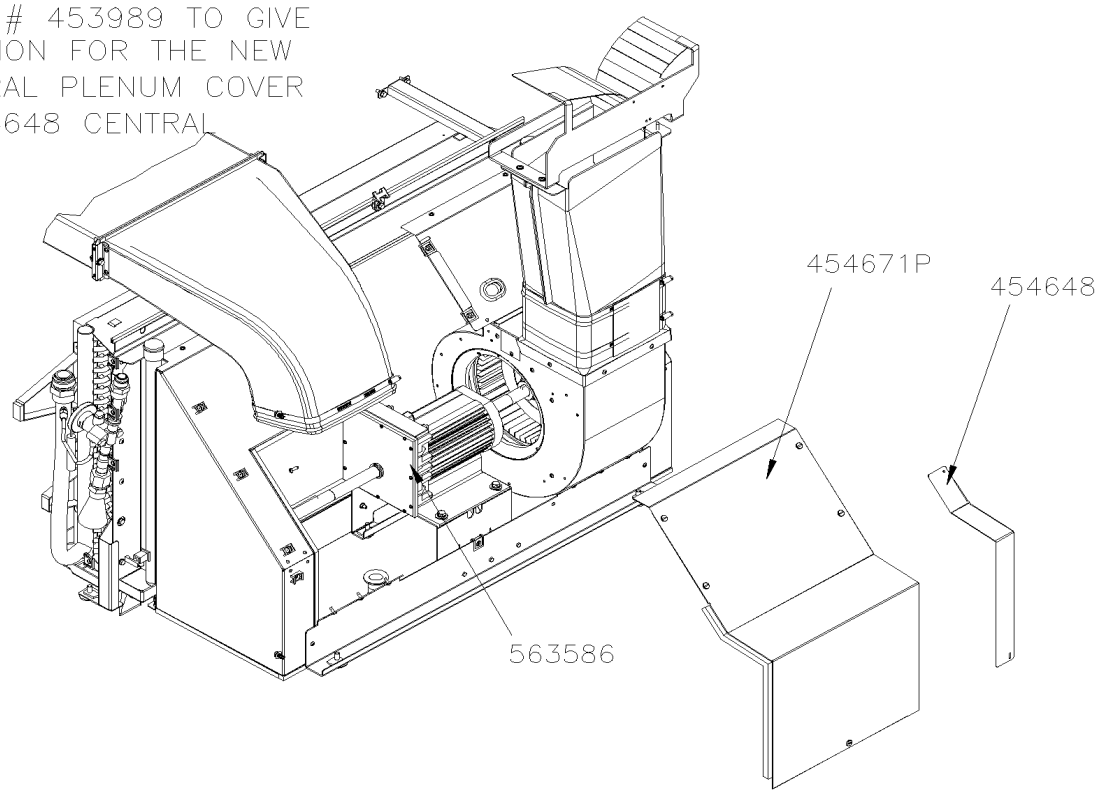

From 6-8806 To 8-9339		Date:07/2024	PAGE:Y2-2220-01

UNDER FLOOR AIR DUCTING

Item#	Part	Description	XLII 45	XLII MTH40	XLII MTH45	XLII MTH45E	NOTES
1	Call order desk	DUCT, L.H. OUTLET EVAPORATOR FAN		1	1	1	P
1	453978	. DUCT		1	1	1	
2	454236	. ATTACHMENT		2	2	2	
3	453997	. GASKET		1	1	1	
4	Call order desk	DUCT UNDER FLOOR ASSY		1	1	1	P
4	453976	. DUCT		4	4	4	
5	454235	. ATTACHMENT W/NUT		1	1	1	
NS	500957	. SCREW TP BDG PH #10x3/4 N500		4	4	4	
NS	506268	. TAPE RUB ADH1 URE 3/8" x 1/2" x 25' / GREY 1820		AR	AR	AR	
6	454306	. PLATE SEALING INSIDE		1	1	1	
7	454305	PLATE SEALING		1	1	1	
8	454253	DEFLECTOR ASSY CONDENSOR SIDE		1	1	1	
10	453979	DUCT, R,H, OUTLET EVAPORATOR FAN		1	1	1	
11	454284	DEFLECTOR ASSY EVAPORATOR SIDE		1	1	1	
20	453791	TEMPERATURE SENSOR ASSY W/SUPPORT		1	1	1	
21	453792	. SUPPORT TERMISTOR		1	1	1	
22	563063	. SENSOR THERMISTOR ASSY / TEMPERATURE / ("DELPHI")		1	1	1	
23	952637	. CLAMP / 1"1/16 I.D.		1	1	1	
24	500416	. SCREW MA PAN PH #10-32x1/2 BK		1	1	1	
25	500700	. NUT HEX #10-32 Z050		1	1	1	
26	453789	. GRILL / AIR RETURN		1	1	1	
30	453987	PLENUM FORWARD SECTION		1	1	1	
31	453991	REINFORCMENT		2	2	2	
31	504112	RIVET POP DOME OE 1/8x1/8 AL		8	8	8	
32	453988	PLENUM BACKWARD SECTION		1	1	1	
33	453989	PLENUM CENTRAL SECTION		1	1	1	
33A	454671P	PLENUM CENTRAL SECTION		1	1	1	
33B	454648	SUPPORT PLENUM CENTRAL SECTION		1	1	1	
34	504681	STUD 6MM (DZUS)		5	5	5	
35	504604	FASTENER		5	5	5	
36	504605	RECEPTACLE 6 MM		5	5	5	
40	500957	SCREW TP BDG PH #10x3/4 N500		17	17	17	
41	502737	SCREW CAP HEX M6-1.0x25 SS BK		2	2	2	
42	502681	NUT HEX NYRT M6-1.0 N500 G8		2	2	2	
43	500642	SCREW TP PAN PH #10x3/4 Z050		9	9	9	
44	502737	SCREW CAP HEX M6-1.0x25 SS BK		2	2	2	
45	502573	WASHER FL 6.4x12.5x1.6 SS		2	2	2	
46	502853	WASHER LO SPT 6.1x11.8x1.6 N500		6	6	6	
47	500804	WASHER FL .203x.500x.047 N500		4	4	4	
48	500411	WASHER FL .260x.697x.050 SS		4	4	4	
49	502868	SCREW TC TR PH #10-16x1/2 N500		16	16	16	
50	502904	NUT SPR J #10A .035-.050 N500		AR	AR	AR	

From 6-8806 To 8-9339		Date:07/2024	PAGE:Y2-2220-01

UNDER FLOOR AIR DUCTING

Item#	Part	Description	XLII 45	XLII MTH40	XLII MTH45	XLII MTH45E	NOTES
		P) CALL ORDER DESK FOR SPECIFIC APPLICATION (V.I.N.)					

From Y-7046 To 6-8906		Date:07/2024	PAGE:Y2-2221-10
DUCTING HEATER & A/C - BUS FLOOR			

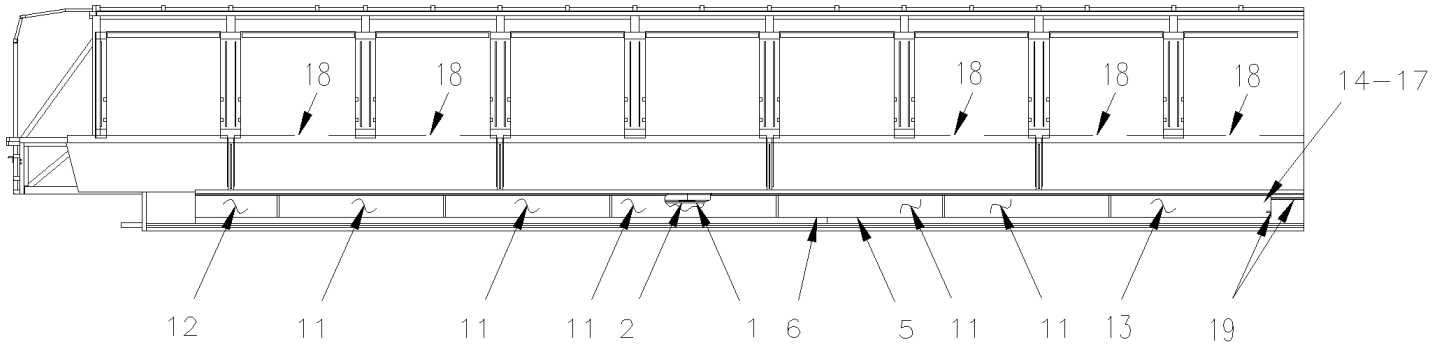

LEFT SIDE

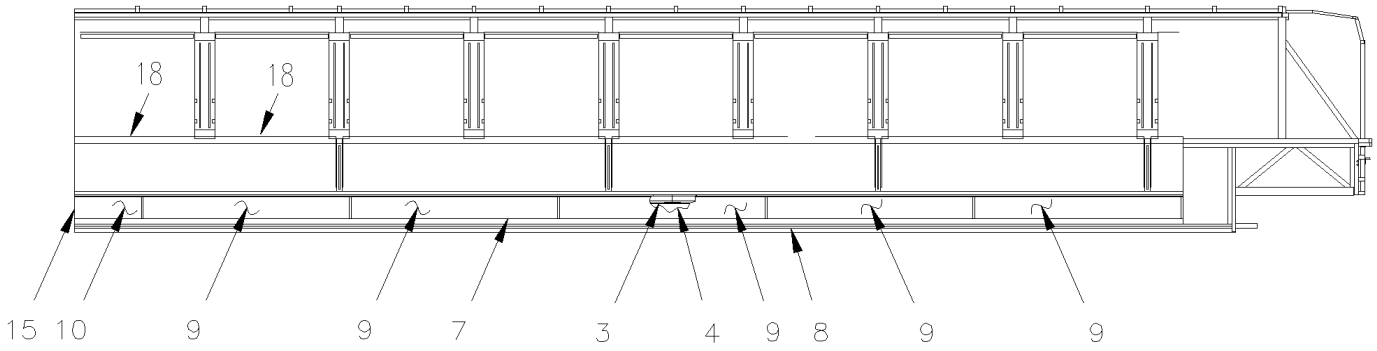

RIGHT SIDE

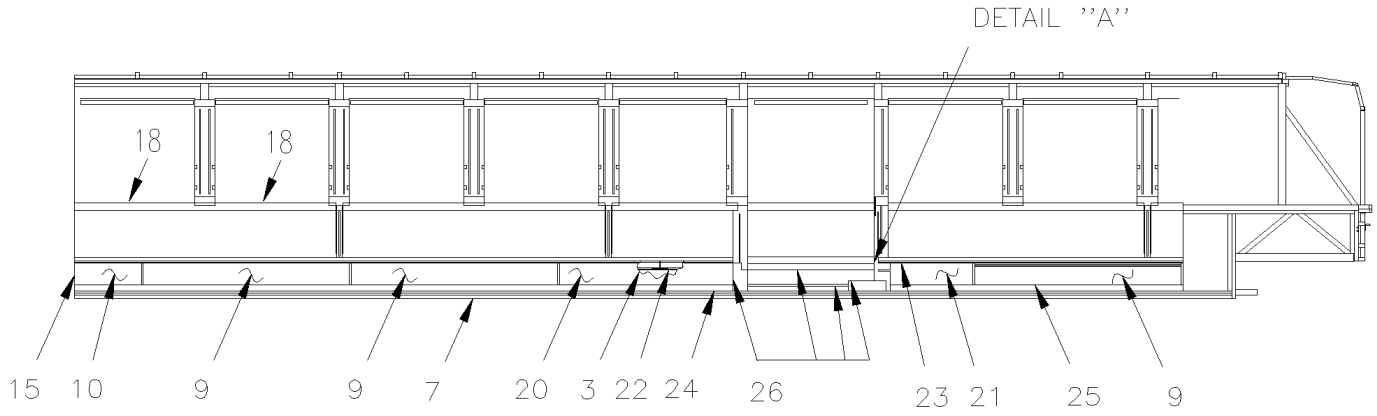

RIGHT SIDE WITH W.C.L.

From Y-7046 To 6-8906		Date:07/2024	PAGE:Y2-2221-10
DUCTING HEATER & A/C - BUS FLOOR			

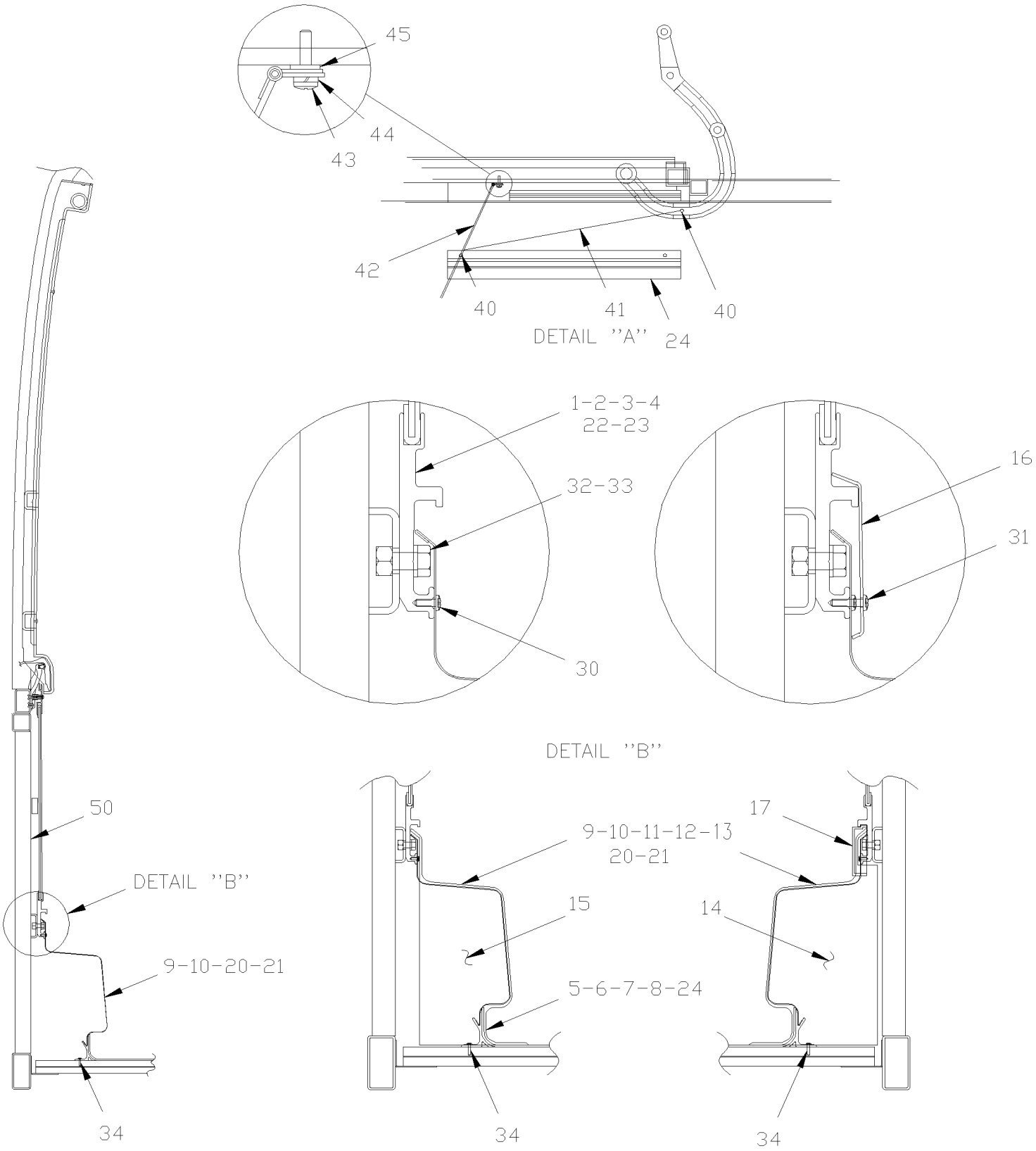

From Y-7046 To 6-8906		Date:07/2024	PAGE:Y2-2221-10

DUCTING HEATER & A/C - BUS FLOOR

Item#	Part	Description	XLII 45	XLII MTH40	XLII MTH45	XLII MTH45E	NOTES
1	327016	EXTRUSION, LOWER WALL 5651MM To 2-7761	1				
1	327631	EXTRUSION, LOWER WALL / GREY 5651MM From 2-7762	1				
2	327017	EXTRUSION, LOWER WALL 5335MM To 2-7761	1				
2	327632	EXTRUSION, LOWER WALL 5335MM / GREY From 2-7762	1				
3	327014	EXTRUSION, LOWER WALL 5651MM To 2-7761	1				
3	327629	EXTRUSION, LOWER WALL / GREY 5651MM From 2-7762	1				
4	327015	EXTRUSION, LOWER WALL 4969.6MM To 2-7761	1				
4	327630	EXTRUSION, LOWER WALL 4969.6MM / GREY From 2-7762	1				
5	326648	EXTRUSION, FLOOR 4512MM	1				
7	326847	EXTRUSION, FLOOR 6065MM	1				
8	326653	EXTRUSION, FLOOR 4272MM	1				
9	326696	DUCT, AIR 2000MM To 2-7850	3				
9	327688	DUCT, AIR 2000 MM / GREY From 2-7851	3				
10	326834	DUCT, AIR 751MM To 2-7850	1				
10	327697	DUCT, AIR 751MM / GREY From 2-7851	1				
11	326758	DUCT, AIR 1615MM To 2-7850	5				
11	327695	DUCT, AIR 1615MM / GREY From 2-7851	1				
12	326761	DUCT, AIR 1130MM To 2-7850	1				
12	327696	DUCT, AIR 1130MM / GREY From 2-7851	1				
13	327267	DUCT, AIR 1691MM To 2-7850	1				
13	327698	DUCT, AIR 1691MM / GREY From 2-7851	1				
14	326841	CAP CLOSING / L.H. FRONT DUCT	1				
15	327345	CAP CLOSING / R.H. FRONT DUCT	1				
16	328984	MOULDING, COVER CABLE / 203MM To 2-7850	1				
16	327742	MOULDING, COVER CABLE / GREY / 203MM From 2-7851	1				
16	327436	MOULDING, COVER CABLE / 330MM To 2-7850	1				
16	327709	MOULDING, COVER CABLE / GREY / 330MM From 2-7851	1				
16	327073	MOULDING, COVER CABLE / 360MM To 2-7850	1				
16	327706	MOULDING, COVER CABLE / GREY / 360MM From 2-7851	1				
16	327074	MOULDING, COVER CABLE / 390MM To 2-7850	1				
16	327707	MOULDING, COVER CABLE / GREY / 390MM From 2-7851	1				
16	327075	MOULDING, COVER CABLE / 465MM To 2-7850	1				
16	327708	MOULDING, COVER CABLE / GREY / 465MM From 2-7851	1				
16	327072	MOULDING, COVER CABLE / 530MM To 2-7850	1				
16	327705	MOULDING, COVER CABLE / GREY / 530MM From 2-7851	1				
17	327269	FINISHING MOULDING / PLASTIC CAP 200MM x 88MM	1				
18	453690	RESTRICTION AIR DIFFUSOR / "U" SHAPE 757MM	7				
19	506035	TAPE RUB ADH1 NEO 1/2" x 1" x 15' / BLACK 1220X	AR				
20	328766	DUCT 1741MM To 2-7850	1				
20	327699	DUCT, AIR 1741MM / GREY From 2-7851	1				
21	328767	DUCT 866MM To 2-7850	1				
21	327737	DUCT, AIR 866MM / GREY From 2-7851	1				

From Y-7046 To 6-8906		Date:07/2024	PAGE:Y2-2221-10

DUCTING HEATER & A/C - BUS FLOOR

Item#	Part	Description	XLII 45	XLII MTH40	XLII MTH45	XLII MTH45E	NOTES
22	328762	EXTRUSION, LOWER WALL 775MM To 2-7843	1				
22	327771	EXTRUSION, LOWER WALL / GREY 775MM From 2-7844	1				
23	328763	EXTRUSION, LOWER WALL 2878MM To 2-7843	1				
23	327772	EXTRUSION, LOWER WALL 2878MM From 2-7844	1				
24	328764	EXTRUSION, LOWER WALL / GREY 367MM	1				
25	328765	EXTRUSION, LOWER WALL 2817MM	1				
26	**Y2-2221-80**	**AIR DUCT W.C.L. DOOR "RICON"**	1				
30	500417	SCREW TP PAN PH #6x3/8 Z050	84				
31	500583	SCREW TP PAN PH #6x1/2 Z050	56				
32	5001473	SCREW CAP HEXS 5/16-18x3/4 NYRT	20				
33	500441	WASHER FL .312x.734x.065 Z050	20				
34	500552	SCREW TP OV PH #6x3/4 Z050	34				
NS	500463	WASHER FN CKF .187x.500x.090 BR Z050	34				
40	504106	RIVET POP DOME OE 1/8x1/4 AL	1				
41	327522	WIRE ASSY	1				
42	328888	DUCT CLOSING TRAP ASSY	1				
43	500658	SCREW TC PAN PH #10-24x3/4 Z050	1				
44	500470	WASHER LO SPT .193x.334x.047 Z050	1				
45	5001137	WASHER FL .203x.438x.050 SS	1				
50	850073	ALUMINUM WALL COVERING ADHESIVE / 28 1/2" X 448"	2				
NS	862967	SAFETY BELT CUTTER / W.C.L. / EMERGENCY	1				

From Y-7046 To 6-8906		Date:07/2024	PAGE:Y2-2221-20
ENTRANCE STEP DE-ICER			

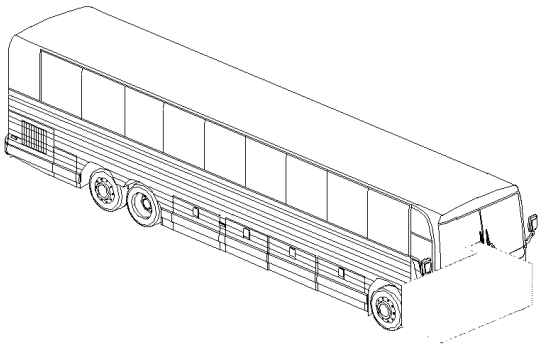

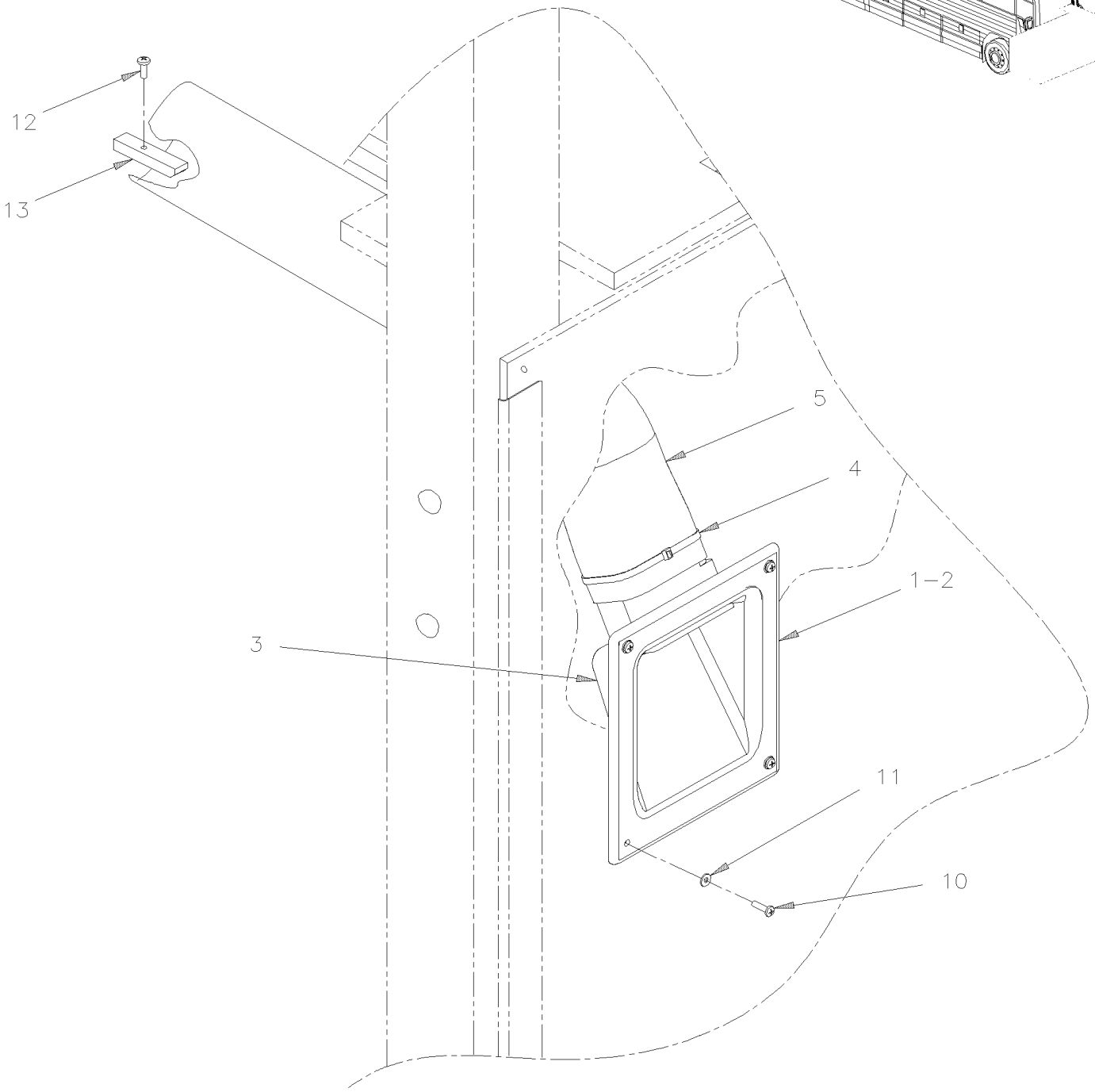

From Y-7046 To 6-8906		Date:07/2024	PAGE:Y2-2221-20

ENTRANCE STEP DE-ICER

Item#	Part	Description	XLII 45	XLII MTH40	XLII MTH45	XLII MTH45E	NOTES
1	373764	DIFFUSOR ASSY	1				
2	373689	. SUPPORT, DIFFUSOR	1				
3	871106	. LOUVER, ADJUSTABLE	1				
4	504637	. CABLE TIE / 3/16" x 13"	1				
NS	680319	. TAPE ADHESIF ELECTRIC / BLACK ¾"	AR				
5	373697	. HOSE 3" I.D. X 550MM	1				
NS	503695	. HOSE FLEXIBLE / AIR DUCT 3" I.D. X 25`/ PLASTIC	AR				
10	502774	NUT WELL #10-32x.625	4				
11	502735	SCREW MA BDG PH #10-32x1 SS BK	4				
12	500432	SCREW TC PAN PH #8-32x3/4 Z050	1				
13	372343	HOSE RETAINER	1				

From Y-7046 To 8-9339		Date:07/2024	PAGE:Y2-2221-50
DUCTING HEATER & A/C - MTH FLOOR			

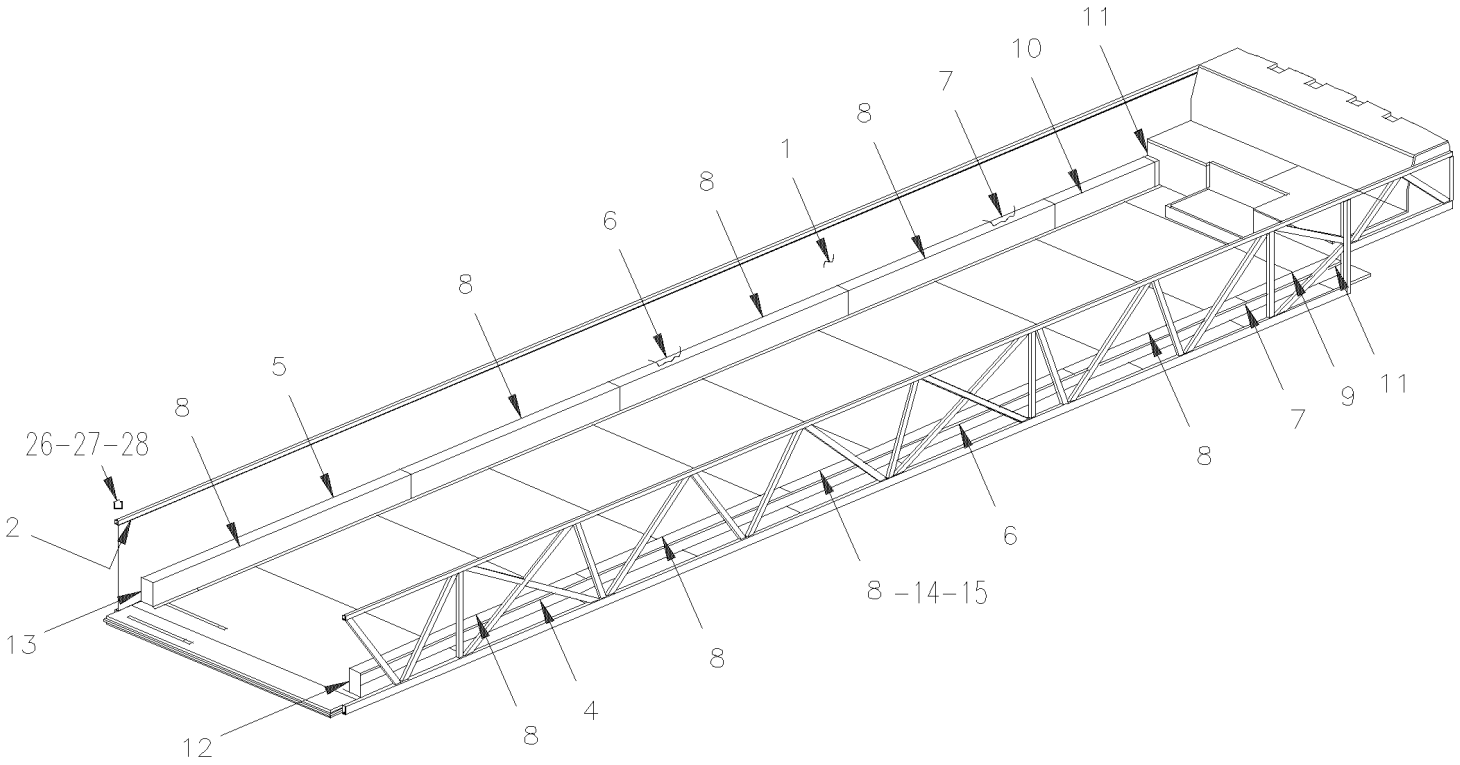

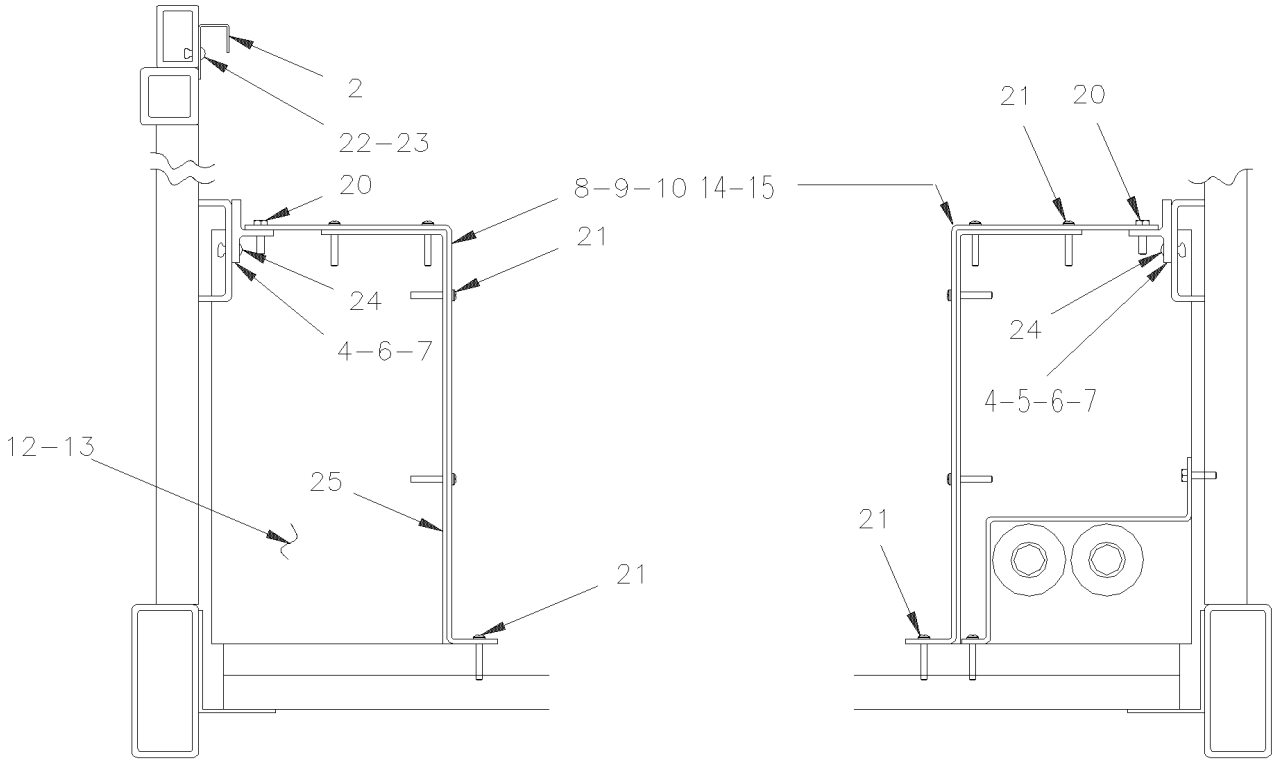

From Y-7046 To 8-9339		Date:07/2024	PAGE:Y2-2221-50

DUCTING HEATER & A/C - MTH FLOOR

Item#	Part	Description	XLII 45	XLII MTH40	XLII MTH45	XLII MTH45E	NOTES
1	850065	ALUMINUM WALL COVERING ADHESIVE / 32 1/4" X 455"		1	1	1	
2	320186	AIR GRILL & SPACER 48"LG / BELOW WINDOW		18			
2	320186	AIR GRILL & SPACER 48"LG / BELOW WINDOW			20	20	
2	378243	AIR GRILL & SPACER / BELOW WINDOW			1		
4	373706	"T" SUPPORT, AIR DUCT			1		
4	372602	"T" SUPPORT, AIR DUCT 3849MM				1	
4	373709	"T" SUPPORT, AIR DUCT		1			
5	373492	"T" SUPPORT, AIR DUCT 3936MM			1		
5	373716	"T" SUPPORT, AIR DUCT				1	
5	373712	"T" SUPPORT, AIR DUCT		1			
6	373707	"T" SUPPORT, AIR DUCT			2		
6	373714	"T" SUPPORT, AIR DUCT				1	
6	373710	"T" SUPPORT, AIR DUCT		2			
7	373708	"T" SUPPORT, AIR DUCT			1		
7	373715	"T" SUPPORT, AIR DUCT				1	
7	373958	"T" SUPPORT, AIR DUCT 2815MM			1		
7	373711	"T" SUPPORT, AIR DUCT		2			
8	371712	AIR DUCT 2438MM		6			
8	371712	AIR DUCT 2438MM			8	8	
8	374202	DUCT 1657MM From 6-8806			6		
8	374203	DUCT 2046MM From 6-8806				3	
9	373631	DUCT / L.H. REAR 1242MM			1	1	
9	373658	DUCT / L.H. REAR 2121MM		1			
10	373632	DUCT / R.H. REAR 1379MM			1	1	
10	373659	DUCT / R.H. REAR 2267MM		1			
11	506025	RUBBER CHANNEL / 1/18" x 5/16" INT "U" SHAPE / SQUARE C.T.L.		AR	AR	AR	
12	371716	CAP L.H. / FRONT			1		
12	374218	CAP L.H. / FRONT / W/SLIDE OUT From 6-8806				1	
13	371715	CAP R.H. / FRONT			1		
14	373934	DUCT 1090MM			1		
14	373631	DUCT / L.H. REAR 1242MM From 1-7460 To 3-8164			1		
14	373957	DUCT / W/SLIDE OUT 590MM From 4-8165 To 6-8805			1		
14	374180	AIR DUCT 450MM / W/SLIDE OUT From 6-8806			1		
15	374209	DUCT / W/SUPPORT 588MM From 6-8806			1		
15	374181	AIR DUCT 1826MM / W/SLIDE OUT From 6-8806			1		
20	500657	SCREW TC TR PH #10-24x1/2 Z050		AR	AR	AR	
21	500641	SCREW TP PAN PH #8x3/4 Z050		AR	AR	AR	
22	500437	WASHER FL .125x.375x.040 Z050		AR	AR	AR	
23	504105	RIVET POP DOME OE 1/8x3/16 AL		AR	AR	AR	
24	504379	RIVET POP DOME OE 3/16x1/4 SS		AR	AR	AR	
25	506236	TAPE RUB ADH1 CC POL 1/16" x 1/2" x 100' / GREY 2520		AR	AR	AR	
26	293854	SUPPORT SWITCH / REMOTE OPERATIONAL MODEL From 7-9096		1	1	1	

From Y-7046 To 8-9339		Date:07/2024	PAGE:Y2-2221-50

DUCTING HEATER & A/C - MTH FLOOR

Item#	Part	Description	XLII 45	XLII MTH40	XLII MTH45	XLII MTH45E	NOTES
27	562699	SWITCH / M/ON-OFF-M/ON / D.P.D.T. / W/GREEN LED From 7-9096		1	1	1	
28	563278	CAP / HI SPEED MAIN VENTILATION From 7-9096		1	1	1	

From Y-7046 To 6-8906		Date:07/2024	PAGE:Y2-2221-80
AIR DUCT W.C.L. DOOR "RICON"			

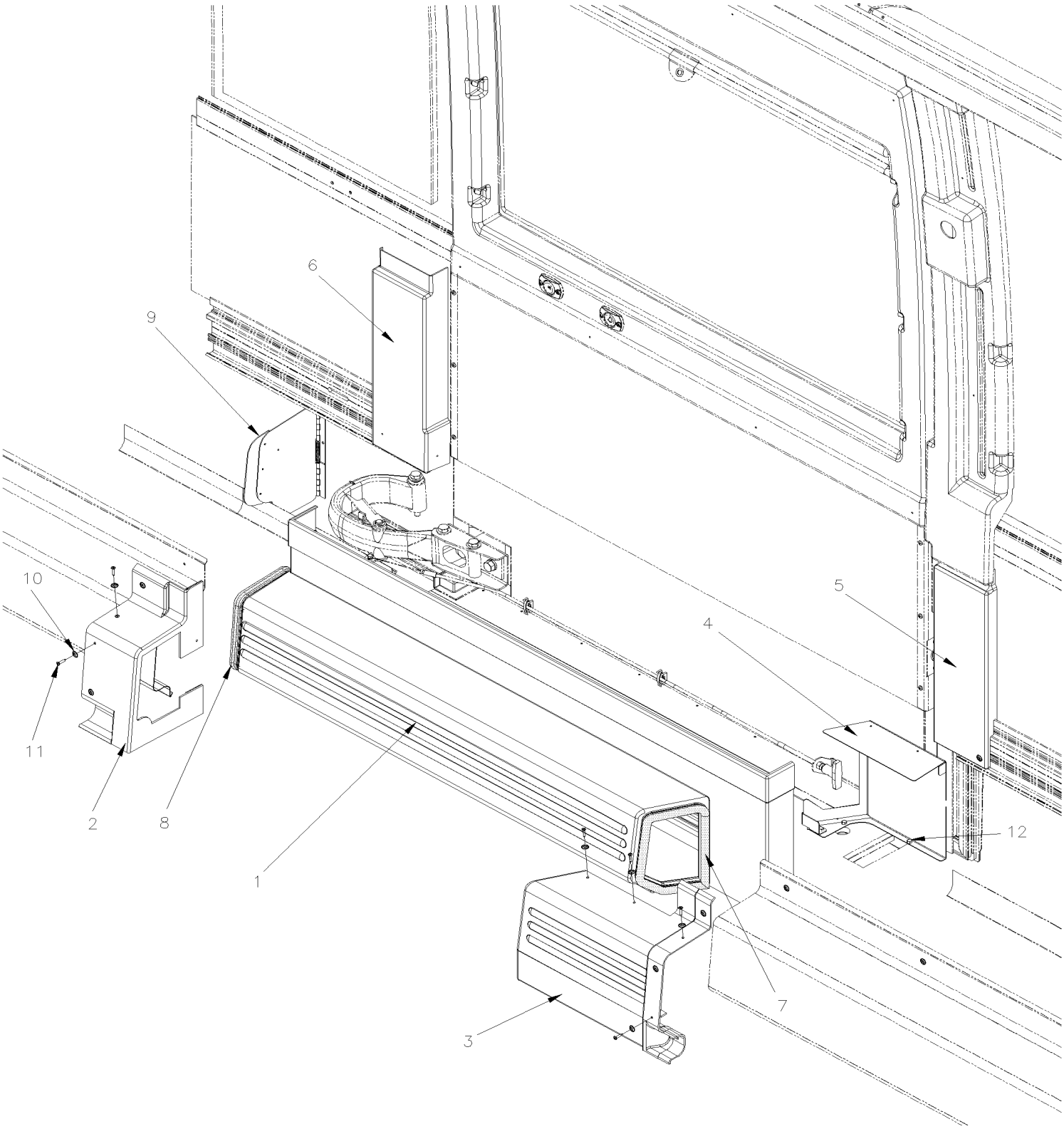

From Y-7046 To 6-8906		Date:07/2024	PAGE:Y2-2221-80

AIR DUCT W.C.L. DOOR "RICON"

Item#	Part	Description	XLII 45	XLII MTH40	XLII MTH45	XLII MTH45E	NOTES
1	328774	DUCT DOOR WCL	1				
2	328775	DUCT WCL FRONT CAP	1				
3	328771	DUCT REAR END TOP / W.C.L. DOOR To 4-8290	1				
3	327797	DUCT REAR END TOP / W.C.L. DOOR From 4-8291	1				
4	328782	DUCT REAR END BOTTOM / W.C.L. DOOR To 4-8290	1				
4	327796	DUCT REAR END BOTTOM / W.C.L. DOOR From 4-8291	1				
5	329538	MOLDING, FINISHING	1				
6	327432	MOLDING, FINISHING	1				
7	327511	SEAL DUCT 546MM	1				
. NS	5061011	. RUBBER EXTRUSION TRIM SEAL / GRIP .090/.120 / 5/8" HOLLOW BULB C.T.L.	AR				
8	327519	SEAL DUCT 590MM	1				
. NS	5061011	. RUBBER EXTRUSION TRIM SEAL / GRIP .090/.120 / 5/8" HOLLOW BULB C.T.L.	AR				
NS	680030	ADHESIVE ADCHEM #EC847 / 1 Liter	AR				
9	328888	DUCT CLOSING TRAP ASSY	1				
9	504106	RIVET POP DOME OE 1/8x1/4 AL	1				
9	327522	WIRE ASSY	1				
10	500643	SCREW TP PAN PH #12x3/4 Z050	AR				
11	500552	SCREW TP OV PH #6x3/4 Z050	AR				
12	5001169	SCREW TP CAP HEXW #12x3/4 SS410	3				

From Y-7046 To 2-7764		Date:07/2024	PAGE:Y2-2222-00
HEATER LINE REAR SECTION - BUS			

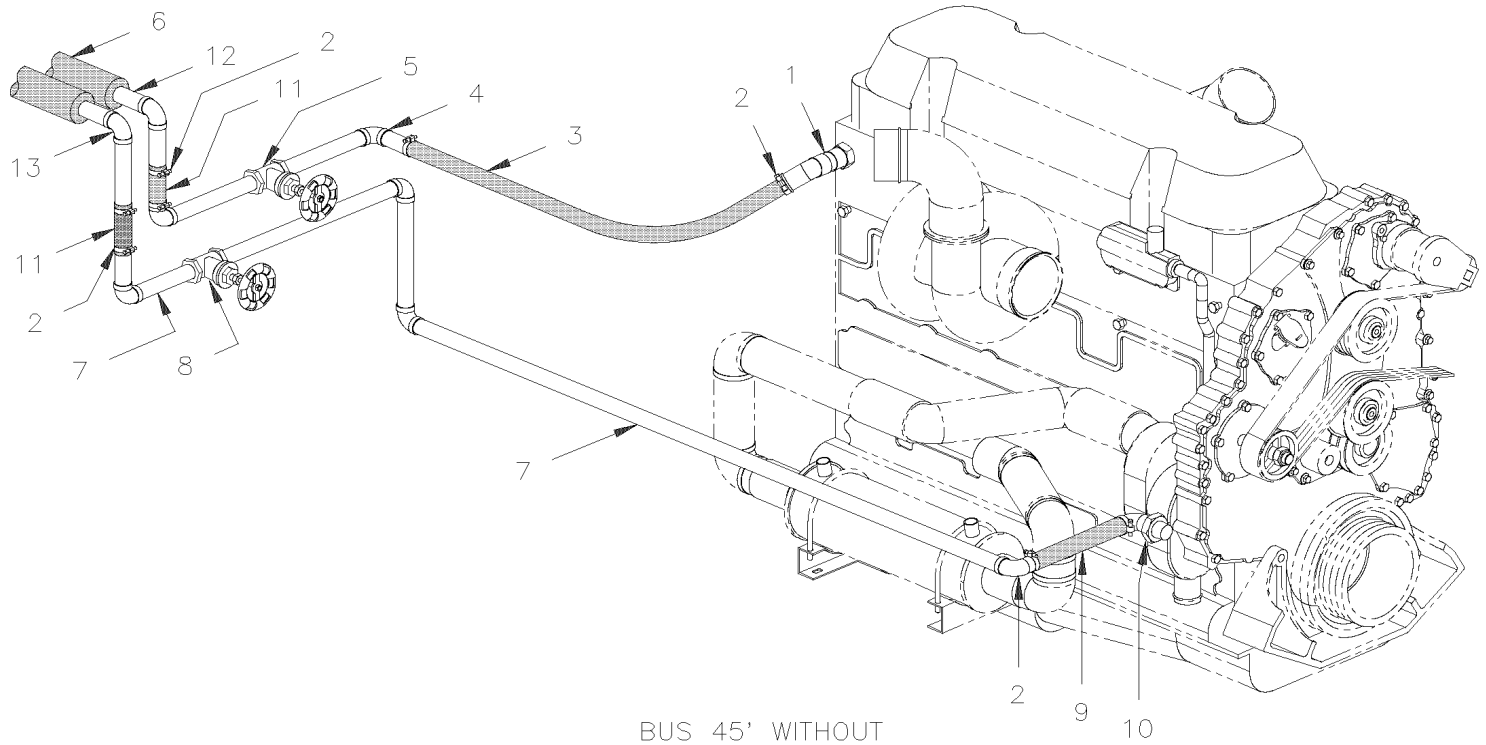

BUS 45' WITHOUT
WATER HEATER

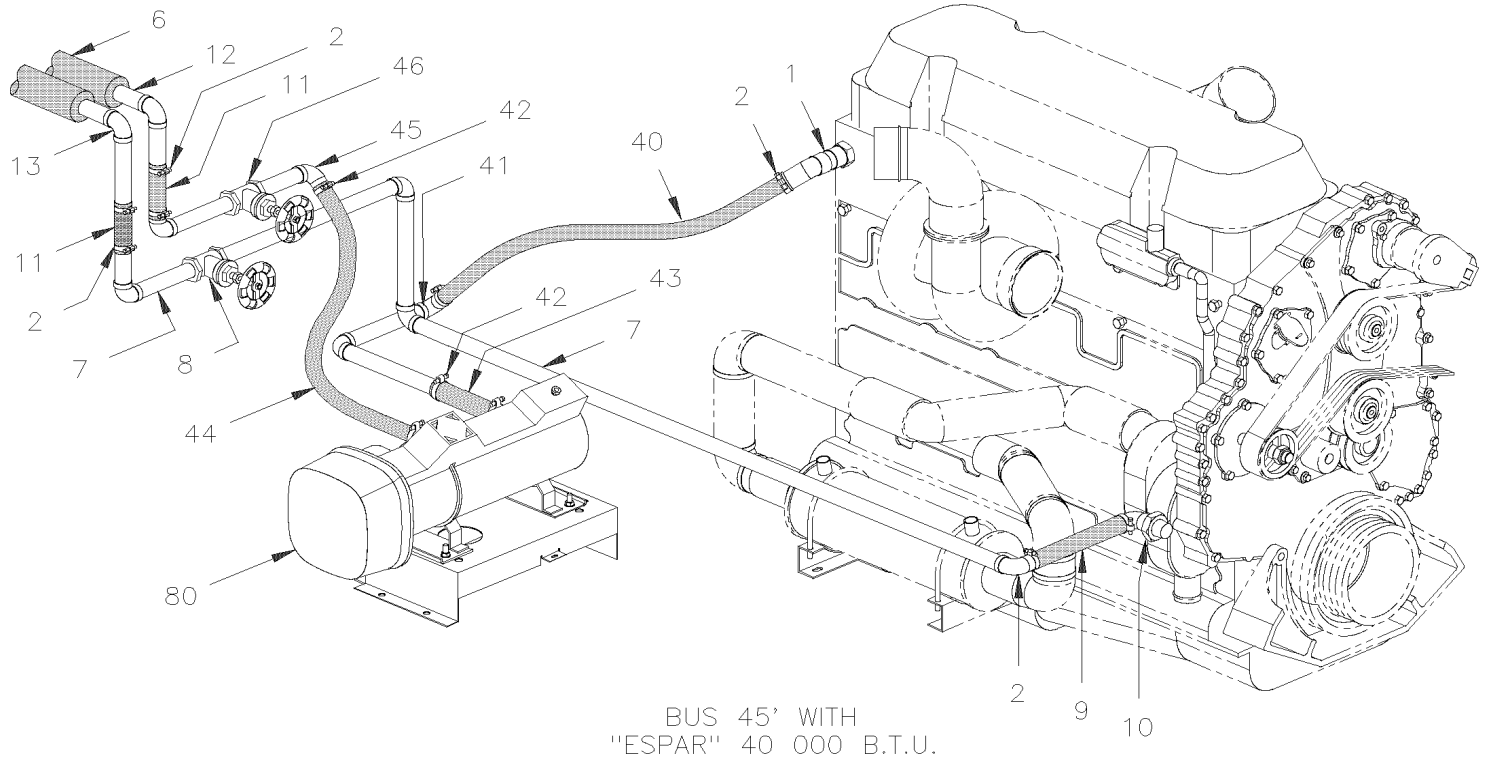

BUS 45' WITH
''ESPAR'' 40 000 B.T.U.

From Y-7046 To 2-7764		Date:07/2024	PAGE:Y2-2222-00
HEATER LINE REAR SECTION - BUS			

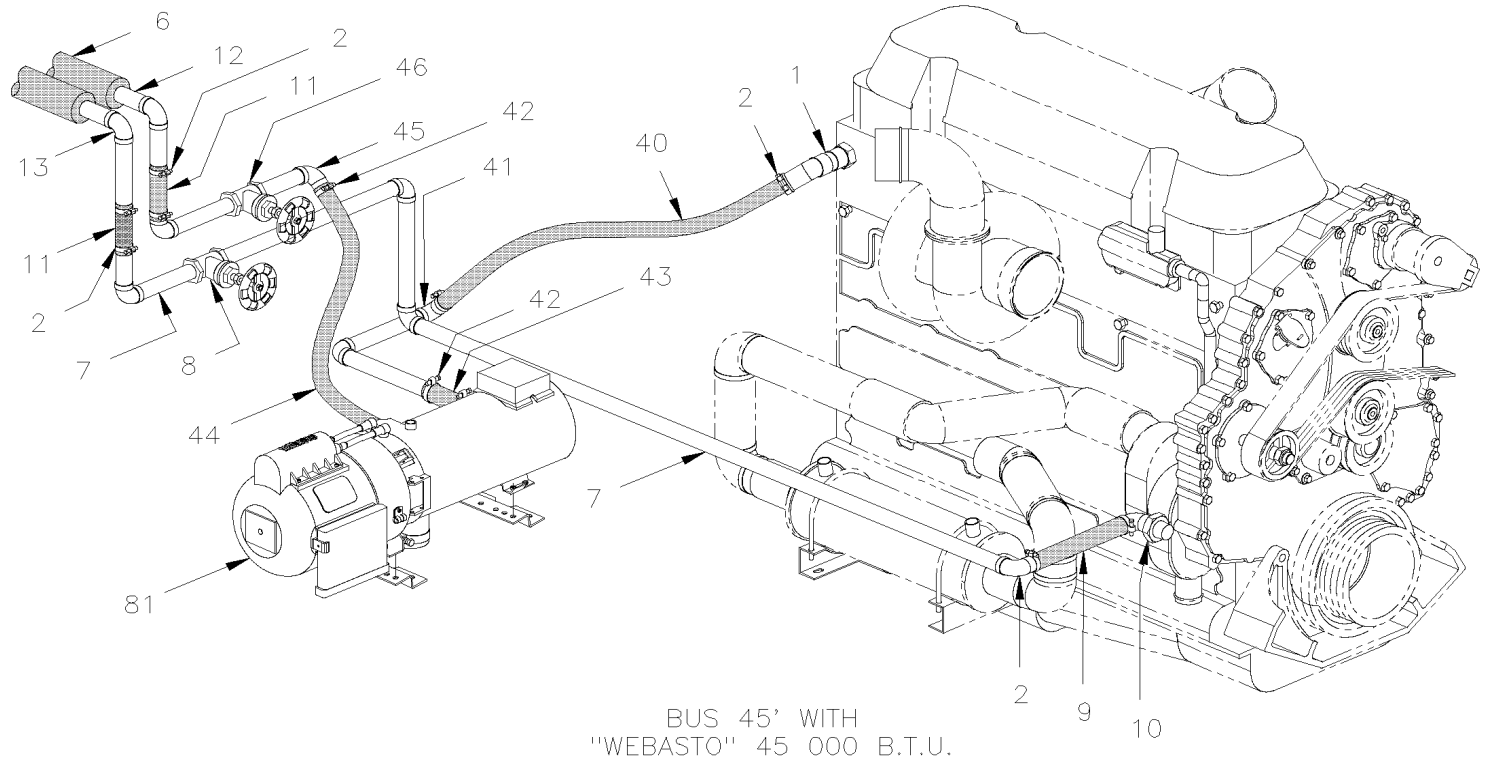

BUS 45' WITH
''WEBASTO'' 45 000 B.T.U.

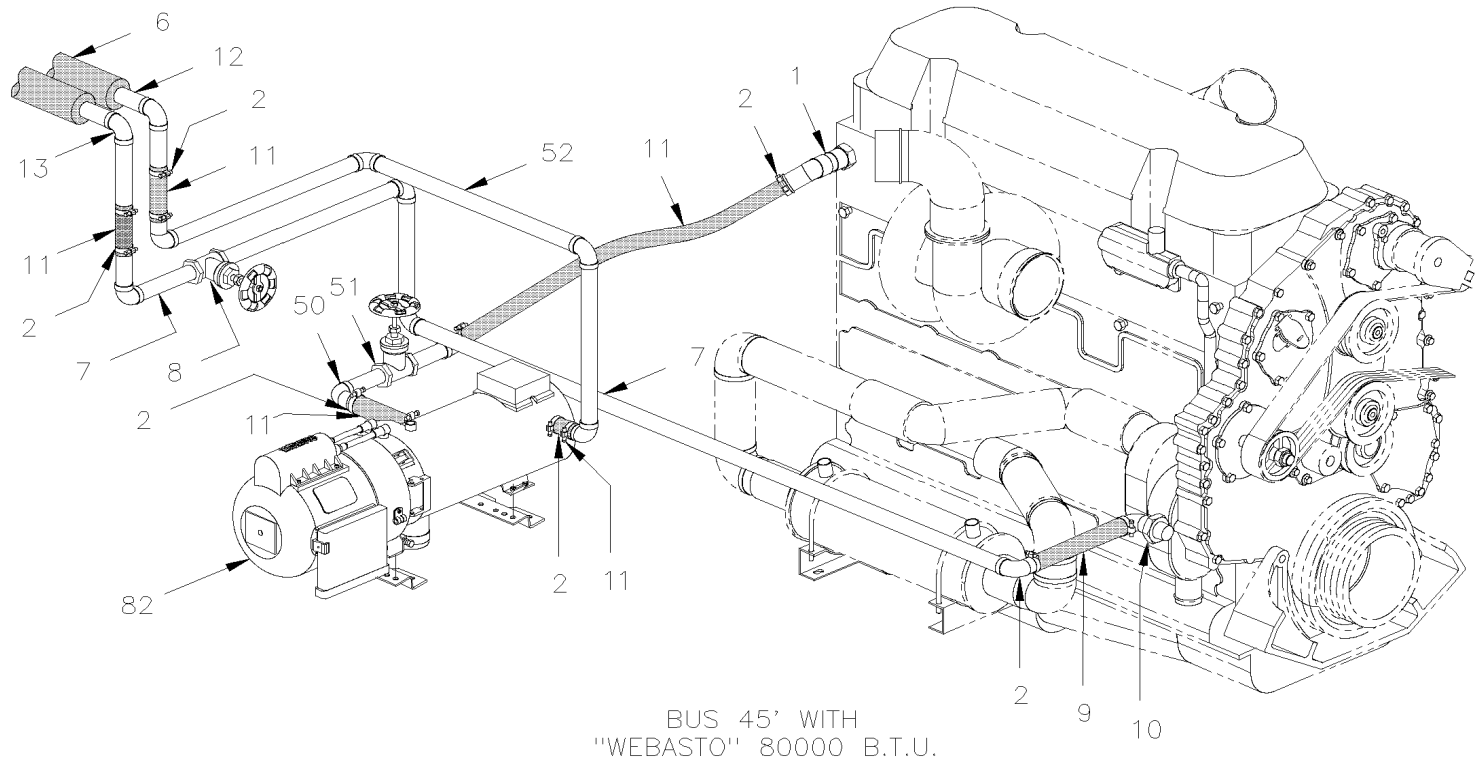

BUS 45' WITH
''WEBASTO'' 80000 B.T.U.

From Y-7046 To 2-7764		Date:07/2024	PAGE:Y2-2222-00

HEATER LINE REAR SECTION - BUS

Item#	Part	Description	XLII 45	XLII MTH40	XLII MTH45	XLII MTH45E	NOTES
1	373040	ADAPTOR ELBOW 45°/ CYLINDER HEAD EXIT	1				
2	504657	HOSE CLAMP / 1"1/16-2" C.T. 9424	AR				
3	373287	HOSE / ENGINE OUTLET / 1 3/8" I.D. 914MM	1				
4	373052	PIPE ASSY HEATING / FEED LINE	1				
5	501861	. GATE VALVE 1 ¼" (WELDED)	1				
6	506242	PIPE INSULATING / 1 3/8" I.D. X 1/2" TH. X 72 / APT13812	AR				
7	373014	PIPE RETURN / ENGINE WATER PUMP	1				
7	373895	PIPE RETURN / ENGINE WATER PUMP	1				B
8	501861	. GATE VALVE 1 ¼" (WELDED)	1				
9	371858	HOSE 1 3/8" I.D. 7"	1				
10	372958	ADAPTOR ELBOW 90° / WATER PUMP INLET	1				
11	371855	HOSE 1 3/8" I.D. 3"	2				
12	Call order desk	PIPE ASSY HEATING / FEED LINE	1				P
13	Call order desk	PIPE ASSY HEATING / RETURN LINE /W/"SLIDE-OUT"	1				P
40	373359	HOSE 1 3/8" I.D. 762MM	1				
. NS	503392	. HOSE SILICONE 4PLY 1 3/8" I.D. x 4'	AR				
. NS	505111	. COIL PROTECTOR / PLASTIC / #22	AR				
41	373095	PIPE ASSY / WATER HEATER INLET	1				
42	504646	HOSE CLAMP / 11/16"-1"1/4 / C.T. 9412	2				
43	403641	HOSE 3/4" I.D. 53MM	1				
44	373481	HOSE 3/4" I.D. 533MM	1				
45	373094	PIPE	1				
46	501861	. GATE VALVE 1 ¼" (WELDED)	1				
50	373042	PIPE	1				
50	373779	PIPE	1				A
51	501861	. GATE VALVE 1 ¼" (WELDED)	1				
52	373041	PIPE	1				
52	373778	PIPE ASSY / W/GATE VALVE	1				A
80	**871085**	**WATER HEATER - "WEBASTO" 45,000 B.T.U.**					
81	**871097**	**WATER HEATER - "ESPAR" 41,000 B.T.U.**					
82	**871036**	**WATER HEATER - "WEBASTO" 80,000 B.T.U.**					
		A) WITH "PROHEAT" 80,000 B.T.U.					
		B) USE ONLY WITH "MODINE" OIL COOLER RETROFIT KIT #071269					
		P) CALL ORDER DESK FOR SPECIFIC APPLICATION (V.I.N.)					

From 2-7765 To 3-8164		Date:07/2024	PAGE:Y2-2222-01

HEATER LINE REAR SECTION - BUS

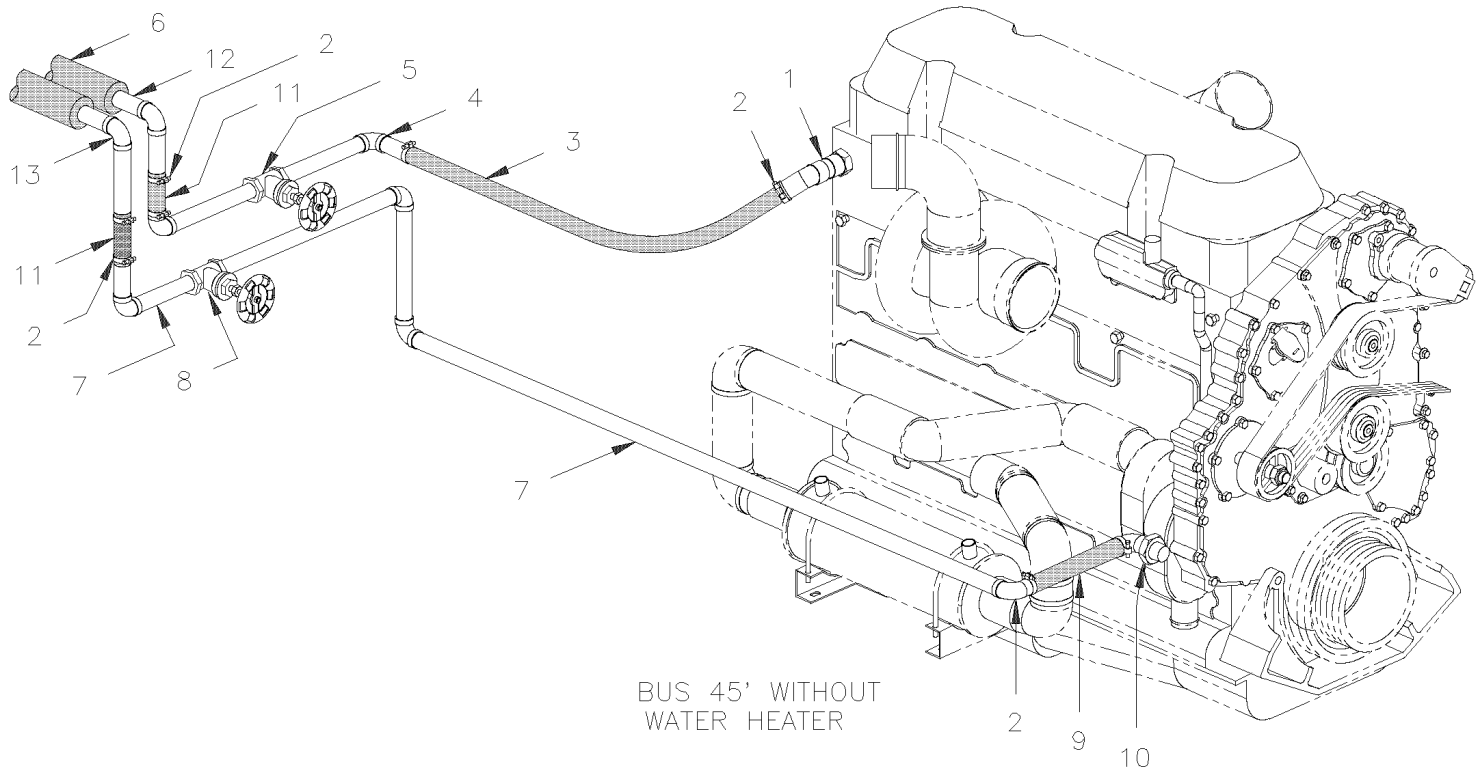

BUS 45' WITHOUT WATER HEATER

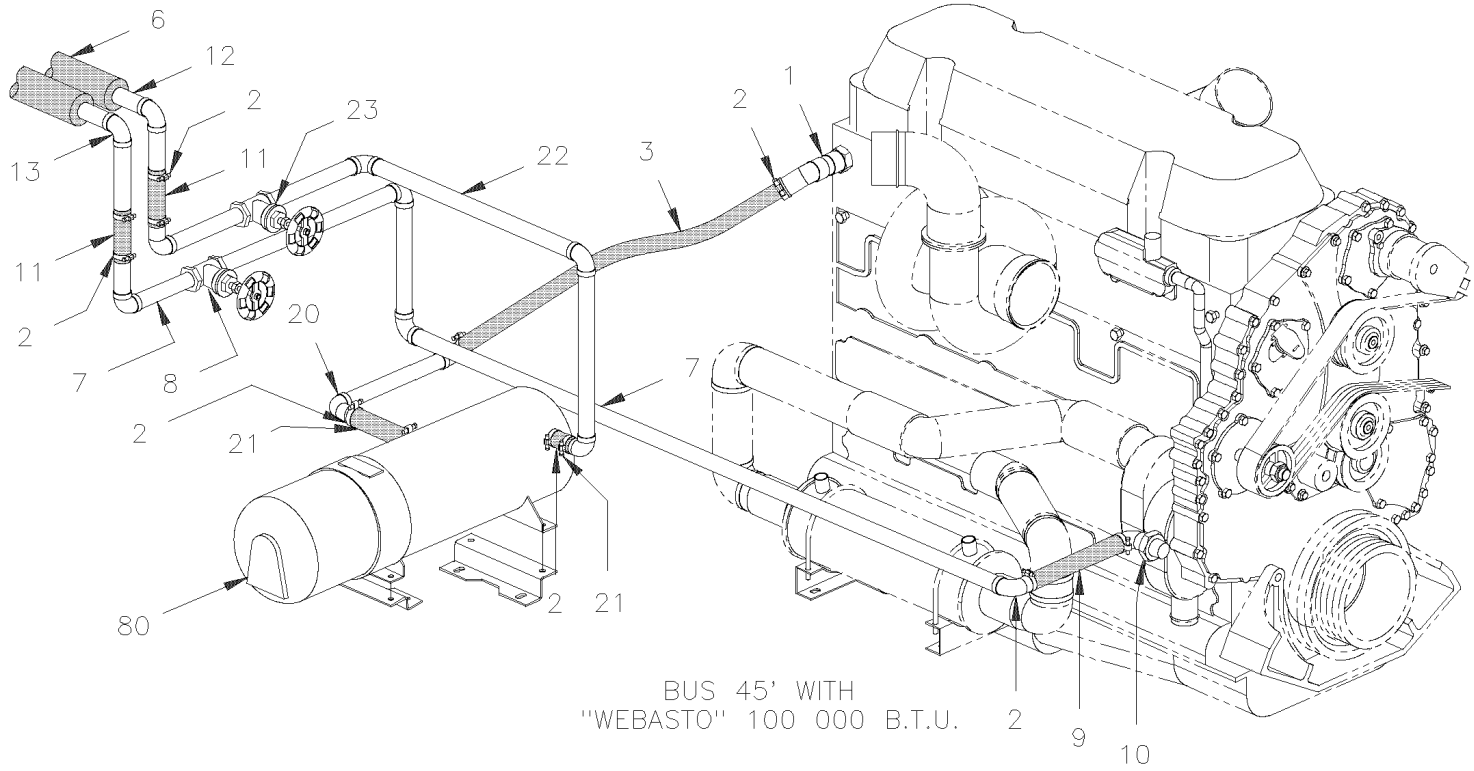

BUS 45' WITH "WEBASTO" 100 000 B.T.U.

From 2-7765 To 3-8164		Date:07/2024	PAGE:Y2-2222-01

HEATER LINE REAR SECTION - BUS

Item#	Part	Description	XLII 45	XLII MTH40	XLII MTH45	XLII MTH45E	NOTES
1	373040	ADAPTOR ELBOW 45°/ CYLINDER HEAD EXIT	1				
2	504657	HOSE CLAMP / 1"1/16-2" C.T. 9424	AR				
3	373287	HOSE / ENGINE OUTLET / 1 3/8" I.D. 914MM	1				
4	373052	PIPE ASSY HEATING / FEED LINE	1				
5	501861	. GATE VALVE 1 ¼" (WELDED)	1				
6	506242	PIPE INSULATING / 1 3/8" I.D. X 1/2" TH. X 72 / APT13812	AR				
7	373014	PIPE RETURN / ENGINE WATER PUMP	1				
7	373928	PIPE RETURN / ENGINE WATER PUMP	1				B
8	501861	. GATE VALVE 1 ¼" (WELDED)	1				
9	371858	HOSE 1 3/8" I.D. 7"	1				
10	372958	ADAPTOR ELBOW 90° / WATER PUMP INLET	1				
11	371855	HOSE 1 3/8" I.D. 3"	2				
12	Call order desk	PIPE ASSY HEATING / FEED LINE	1				P
13	Call order desk	PIPE ASSY HEATING / RETURN LINE /W/"SLIDE-OUT"	1				P
20	373785	PIPE ASSY	1				
21	373483	HOSE REDUCER / 1 1/2" I.D.x1 3/8" I.D. x 76MM	2				
22	373784	PIPE ASSY	1				
23	501861	. GATE VALVE 1 ¼" (WELDED)	1				
80	**871202**	**WATER HEATER - "SPHEROS" 100,000 B.T.U.**					
80	**871100**	**WATER HEATER - "PROHEAT" 80,000 B.T.U.**					
		B) USE ONLY WITH "MODINE" OIL COOLER RETROFIT KIT #071269					
		P) CALL ORDER DESK FOR SPECIFIC APPLICATION (V.I.N.)					

From 4-8165 To 6-8906		Date:07/2024	PAGE:Y2-2222-02
HEATER LINE REAR SECTION - BUS			

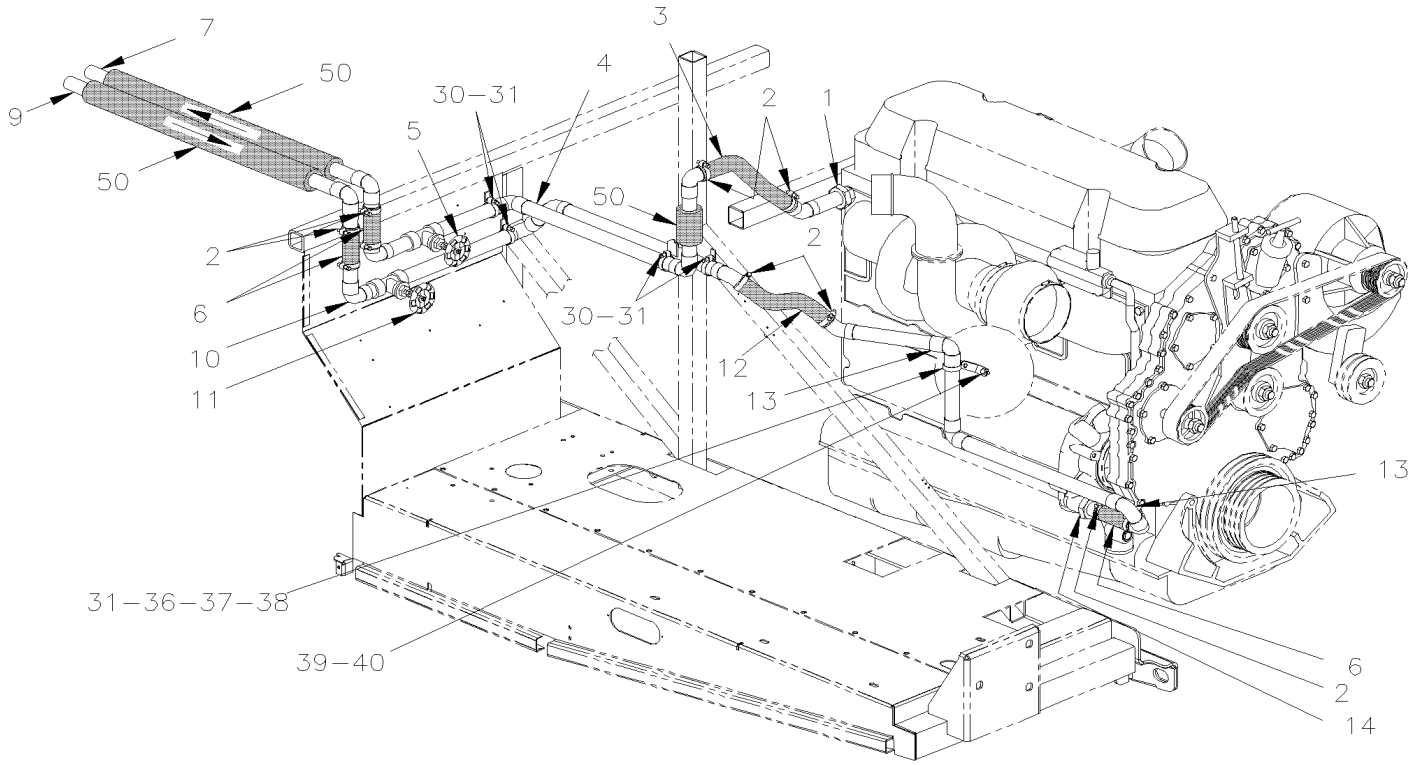

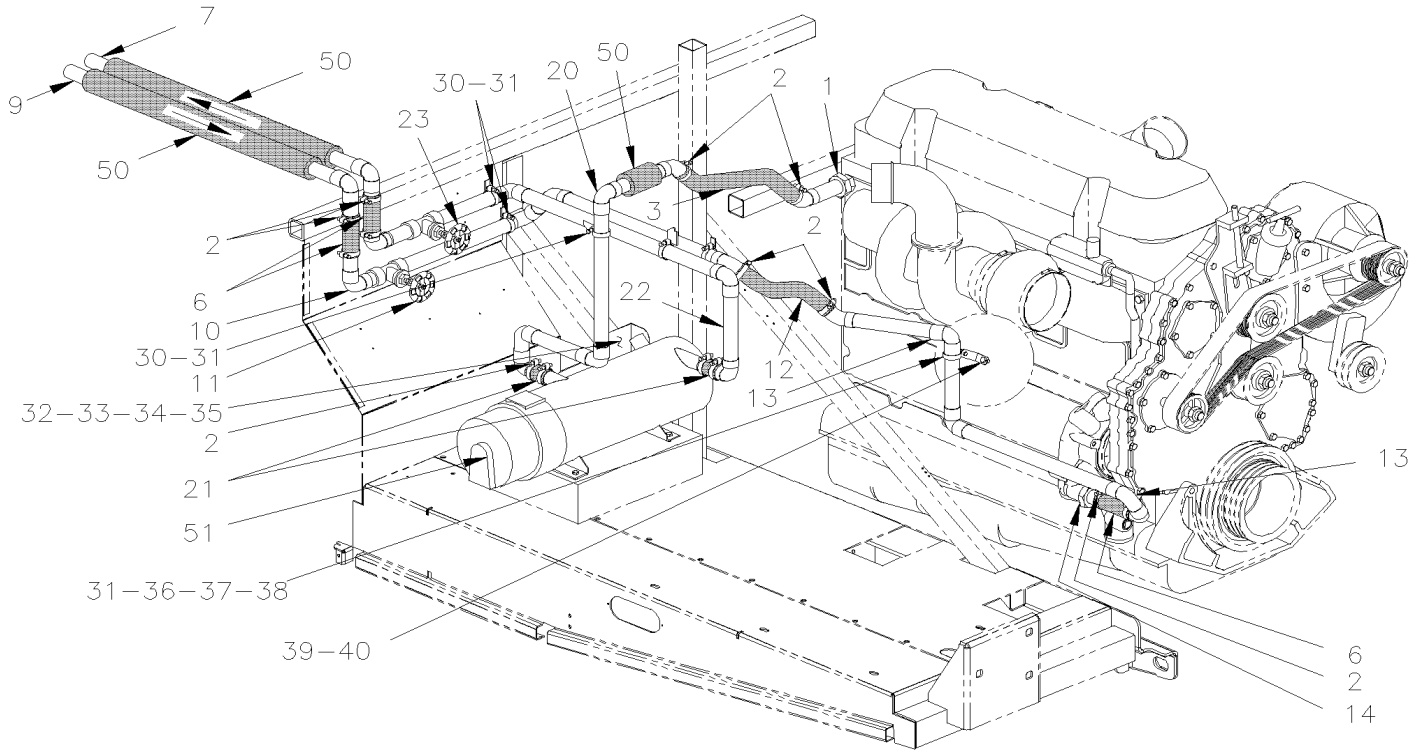

From 4-8165 To 6-8906		Date:07/2024	PAGE:Y2-2222-02

HEATER LINE REAR SECTION - BUS

Item#	Part	Description	XLII 45	XLII MTH40	XLII MTH45	XLII MTH45E	NOTES
1	373888	HOSE ADAPTOR ELBOW 45° 1 3/8" X 1" NPT / CYLINDER HEAD EXIT	1				
2	504657	HOSE CLAMP / 1"1/16-2" C.T. 9424	AR				
3	503392	HOSE SILICONE 4PLY 1 3/8" I.D. x 4'	1				
4	Call order desk	PIPE ASSY HEATING / FEED LINE	1				P
5	501861	. GATE VALVE 1 ¼" (WELDED)	1				
6	371855	HOSE 1 3/8" I.D. 3"	2				
7	Call order desk	PIPE ASSY HEATING / FEED LINE	2				P
9	Call order desk	PIPE ASSY HEATING / RETURN LINE /W/"SLIDE-OUT"	1				P
10	373857P	PIPE ASSY HEATING / RETURN LINE	1				
11	501861	. GATE VALVE 1 ¼" (WELDED)	1				
12	503392	HOSE SILICONE 4PLY 1 3/8" I.D. x 4'	1				
13	Call order desk	PIPE ASSY HEATING / RETURN LINE To 5-8592	1				P A
13	374153P	PIPE ASSY HEATING / RETURN LINE From 5-8593	1				
14	373894	ADAPTOR STRAIGHT 86MM / WATER PUMP INLET	1				
20	373861P	PIPE ASSY / "WEBASTO" / FEED LINE	1				
20	Call order desk	PIPE ASSY / "PROHEAT" / FEED LINE From 5-8453	1				P
21	373483	HOSE REDUCER / 1 1/2" I.D.x1 3/8" I.D. x 76MM	2				
22	373852P	PIPE ASSY TO HEATING / FEED LINE	1				
22	Call order desk	PIPE ASSY TO HEATING / FEED LINE "/ W/"PROHEAT" From 5-8453	1				P
23	501861	. GATE VALVE 1 ¼" (WELDED)	1				
30	500642	SCREW TP PAN PH #10x3/4 Z050	AR				
31	952641	CLAMP P STL ZP RUB 34.9 ID	AR				
32	500946	SCREW TP BDG PH #8x1/2 N500	1				
33	955271	SCREW CAP HEX M6-1.0x16 G8.8 ZG603	1				
34	502853	WASHER LO SPT 6.1x11.8x1.6 N500	3				
35	500855	WASHER FL .188x.438x.049 N500	1				
36	502841	NUT HEX NYRT M5-0.8 N500	1				
37	502746	SCREW MA PAN PH M5-0.8x20 SS BK	1				
38	500804	WASHER FL .203x.500x.047 N500	1				
39	500820	SCREW CAP HEX M8-1.25x16 G10.9 N500	1				
NS	502889	WASHER LO SPT 8.1x12.7x2.0 N500	1				
40	373905	SUPPORT, PIPE HEATER LINE RETURN To 5-8592	1				
40	374154	SUPPORT, PIPE HEATER LINE RETURN From 5-8593	1				
50	506242	PIPE INSULATING / 1 3/8" I.D. X 1/2" TH. X 72 / APT13812	AR				
51	**871202**	**WATER HEATER - "SPHEROS" 100,000 B.T.U.**					
NS	871370	ELBOW 90° SHORT / EXHAUST "PROHEAT" From 5-8453	1				
NS	871371	ELBOW 90° LONG / EXHAUST "PROHEAT" From 5-8453	1				
NS	540061	U-CLAMP / 2 3/4" I.D. From 5-8453	1				
		A) FOR PRODUCT IMPROVEMENT IT SUPPERSEEDED BY 374153P					

From 4-8165 To 6-8906		Date:07/2024	PAGE:Y2-2222-02

HEATER LINE REAR SECTION - BUS

Item#	Part	Description	XLII 45	XLII MTH40	XLII MTH45	XLII MTH45E	NOTES
		P) CALL ORDER DESK FOR SPECIFIC APPLICATION (V.I.N.)					

From Y-7046 To 8-9339		Date:07/2024	PAGE:Y2-2222-10
A/C & HEATING LINE FRONT SECTION			

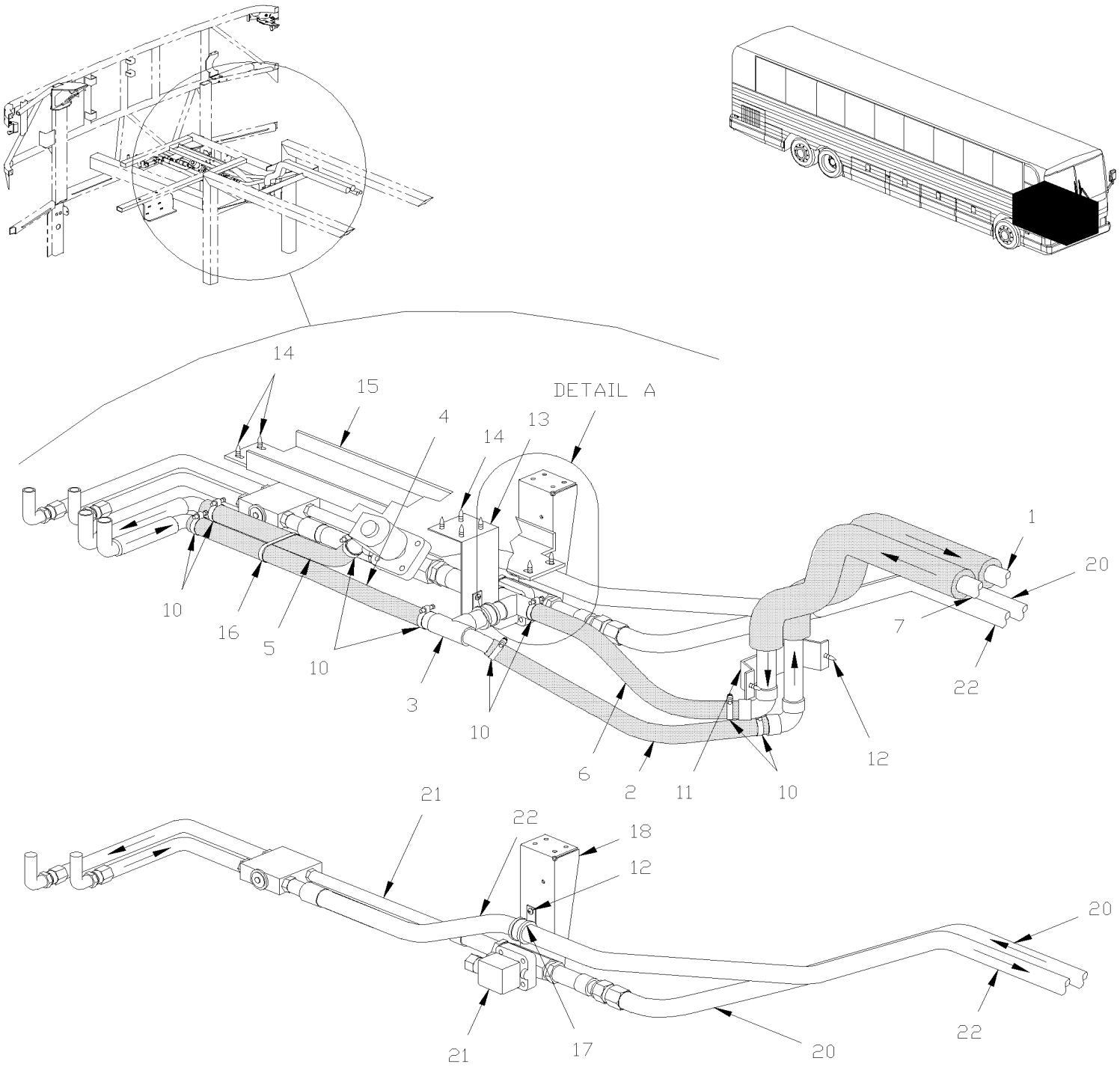

From Y-7046 To 8-9339		Date:07/2024	PAGE:Y2-2222-10
A/C & HEATING LINE FRONT SECTION			

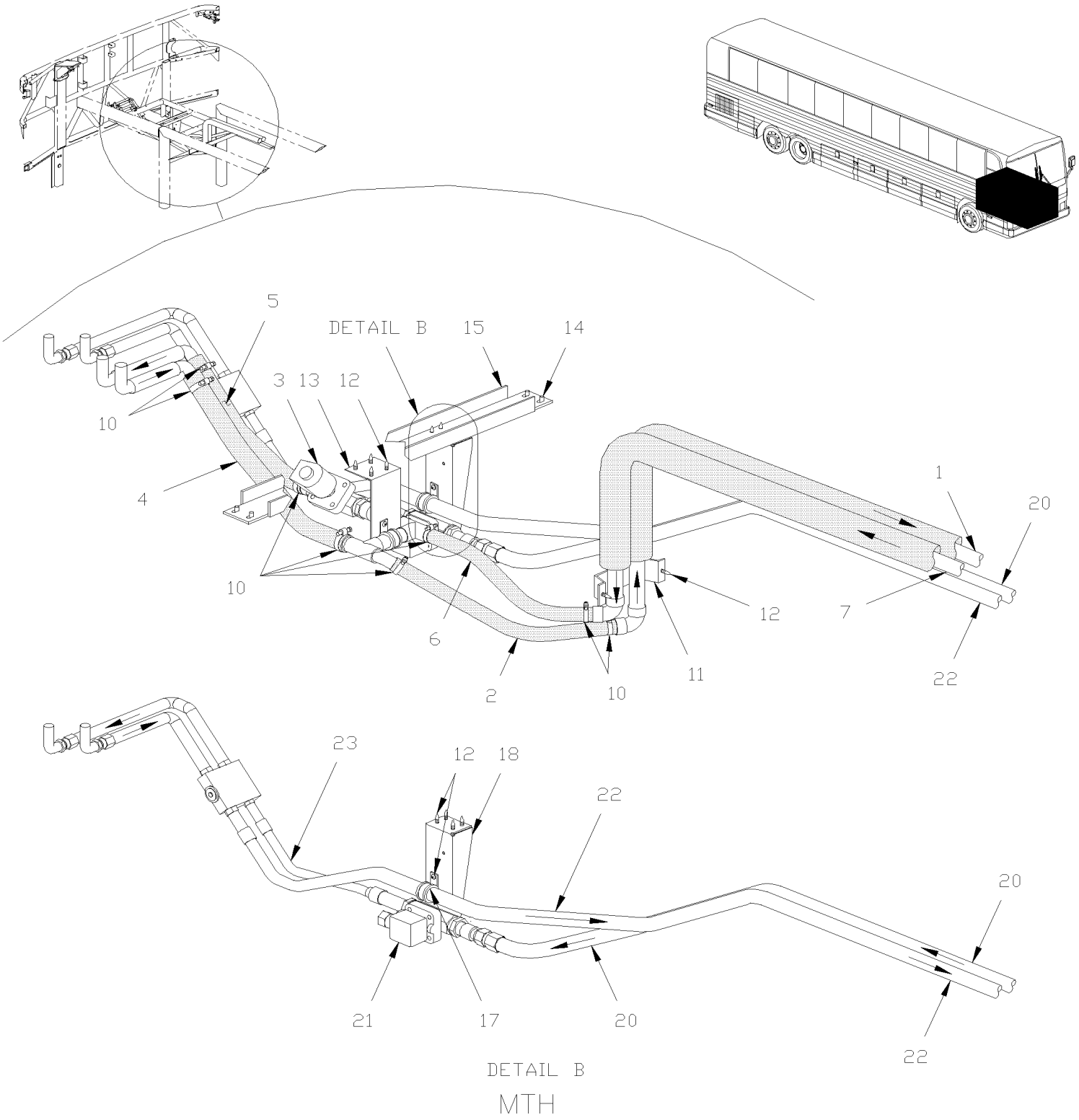

From Y-7046 To 8-9339		Date:07/2024	PAGE:Y2-2222-10

A/C & HEATING LINE FRONT SECTION

Item#	Part	Description	XLII 45	XLII MTH40	XLII MTH45	XLII MTH45E	NOTES
1	Call order desk	PIPE ASSY / 5626MM To 5-8561	1				P
1	Call order desk	PIPE ASSY / 4094MM From 5-8562	1				P
1	Call order desk	PIPE ASSY / 3496MM FORWARD SECTION From 5-8562	1				P
1	Call order desk	PIPE ASSY / 5295MM To 5-8561		1			P
1	374099P	PIPE ASSY / 3377MM BACKWARD SECTION From 5-8562		1			
1	374100P	PIPE ASSY / 1844MM FORWARD SECTION From 5-8562		1			
1	Call order desk	PIPE ASSY / 5526MM To 5-8561			1		P
1	Call order desk	PIPE ASSY / 4119MM FORWARD SECTION From 5-8562			1		P
1	Call order desk	PIPE ASSY / 1432MM BACKWARD SECTION From 5-8562			1		P
1	Call order desk	PIPE ASSY / 6819MM To 5-8561				1	P
1	Call order desk	PIPE ASSY / 4998MM FORWARD SECTION From 5-8562				1	P
1	Call order desk	PIPE ASSY / 1744MM BACKWARD SECTION From 5-8562				1	P
2	373653	HOSE 7/8" I.D. 515MM	1	1	1	1	
. NS	503684	. HOSE SILICONE 1 PLY 7/8" I.D. x 100' / S.L.	AR	AR	AR	AR	
3	Call order desk	WATER VALVE ASSY / W/PIPE	1				P
3	373645P	WATER VALVE ASSY / W/PIPE To 6-8805		1	1	1	
3	Call order desk	WATER VALVE ASSY W/PIPE & SUPPORT From 6-8806		1	1	1	P
4	373791	HOSE 7/8" I.D. 450MM	1				
4	373652	HOSE 7/8" I.D. 500MM		1	1	1	
. NS	503684	. HOSE SILICONE 1 PLY 7/8" I.D. x 100' / S.L.		AR	AR	AR	
5	373688	HOSE 7/8" I.D. 260MM	1				
5	373651	HOSE 7/8" I.D. 320MM		1	1	1	
. NS	503684	. HOSE SILICONE 1 PLY 7/8" I.D. x 100' / S.L.		AR	AR	AR	
6	373654	HOSE 7/8" I.D. 365MM	1	1	1	1	
. NS	503684	. HOSE SILICONE 1 PLY 7/8" I.D. x 100' / S.L.	AR	AR	AR	AR	
7	Call order desk	PIPE ASSY / 5572MM To 5-8561	1				P
7	Call order desk	PIPE ASSY / FORWARD SECTION From 5-8562	1				P
7	Call order desk	PIPE ASSY / 1453MM BACKWARD SECTION From 5-8562	1				P
7	Call order desk	PIPE ASSY / 5228MM To 5-8561		1			P
7	374097P	PIPE ASSY / 3309MM FORWARD SECTION From 5-8562		1			
7	374098P	PIPE ASSY / 1843MM BACKWARD SECTION From 5-8562		1			
7	Call order desk	PIPE ASSY / 5572MM To 5-8561			1		P
7	Call order desk	PIPE ASSY / 4069MM FORWARD SECTION From 5-8562			1		P
7	Call order desk	PIPE ASSY / 1428MM BACKWARD SECTION From 5-8562			1		P
7	Call order desk	PIPE ASSY / 6752MM To 5-8561				1	P
7	Call order desk	PIPE ASSY / 4829MM FORWARD SECTION From 5-8562				1	P
7	Call order desk	PIPE ASSY / 1849MM BACKWARD SECTION From 5-8562				1	P
10	504646	HOSE CLAMP / 11/16"-1"1/4 / C.T. 9412	8	8	8	8	
11	452906	SUPPORT	1		1		
12	500642	SCREW TP PAN PH #10x3/4 Z050	AR		AR		
13	373642	SUPPORT / WATER VALVE	1				
NS	374147	SUPPORT WATER VALVE From 6-8806		1	1	1	

From Y-7046 To 8-9339		Date:07/2024	PAGE:Y2-2222-10

A/C & HEATING LINE FRONT SECTION

Item#	Part	Description	XLII 45	XLII MTH40	XLII MTH45	XLII MTH45E	NOTES
14	502526	SCREW TC BDG PH #12-24x3/4 Z050	AR	AR	AR	AR	
15	373686	SUPPORT / VALVE	1				
15	172355	SUPPORT / VALVE		1	1	1	
16	504637	CABLE TIE / 3/16" x 13"	AR				
17	952631	CLAMP / 3/4" I.D.	1	1	1	1	
18	453315	SUPPORT / A/C VALVE		1	1	1	
20	453389	HOSE ASSY / #10 5970MM	1		1		
. NS	507344	. O-RING / ORS FITTING / #10 NEO	2		2		
20	455218	HOSE ASSY / #10 5970MM	1		1		S
. NS	507344	. O-RING / ORS FITTING / #10 NEO	2		2		S
20	453488	HOSE ASSY / #10 5075MM		1			
. NS	507344	. O-RING / ORS FITTING / #10 NEO		2			
20	455251	HOSE ASSY / #10 5075MM		1			S
. NS	507344	. O-RING / ORS FITTING / #10 NEO		2			S
20	453482	HOSE ASSY / #10 7160MM				1	
. NS	507344	. O-RING / ORS FITTING / #10 NEO				2	
20	455248	HOSE ASSY / #10 6795MM				1	S
. NS	507344	. O-RING / ORS FITTING / #10 NEO				2	S
21	453422	VALVE ASSY / REFRIGERANT SOLENOID	1				
21	453151	VALVE ASSY / REFRIGERANT SOLENOID		1	1	1	
22	453390	HOSE ASSY / #10 4560MM	1		1		
. NS	507344	. O-RING / ORS FITTING / #10 NEO	2		2		
22	455219	HOSE ASSY / #10 4560MM	1		1		S
. NS	507344	. O-RING / ORS FITTING / #10 NEO	2		2		S
22	453487	HOSE ASSY / #10 4220MM		1			
. NS	507344	. O-RING / ORS FITTING / #10 NEO		2			
22	455250	HOSE ASSY / #10 4220MM		1			S
. NS	507344	. O-RING / ORS FITTING / #10 NEO		2			S
22	453476	HOSE ASSY / #10 5745MM				1	
. NS	507344	. O-RING / ORS FITTING / #10 NEO				2	
22	455246	HOSE ASSY / #10 5745MM				1	S
. NS	507344	. O-RING / ORS FITTING / #10 NEO				2	S
23	453331	HOSE ASSY / VALVE & EVAPORATOR / #6 250MM		1	1	1	
. NS	507278	. O-RING / ORS FITTING / #4 NEO		2	2	2	
23	455210	HOSE ASSY / VALVE & EVAPORATOR / #6 250MM		1	1	1	S
. NS	507278	. O-RING / ORS FITTING / #4 NEO		2	2	2	S
		S) SERVICE					
		P) CALL ORDER DESK FOR SPECIFIC APPLICATION (V.I.N.)					

From Y-7046 To 8-9339		Date:07/2024	PAGE:Y2-2222-15
A/C LINE REAR SECTION W/05G			

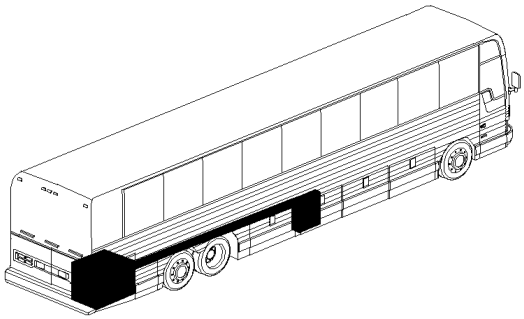

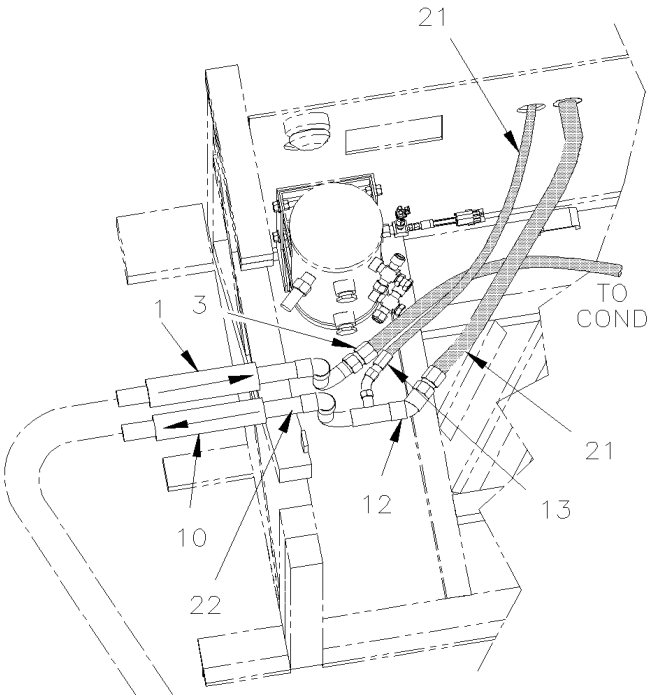

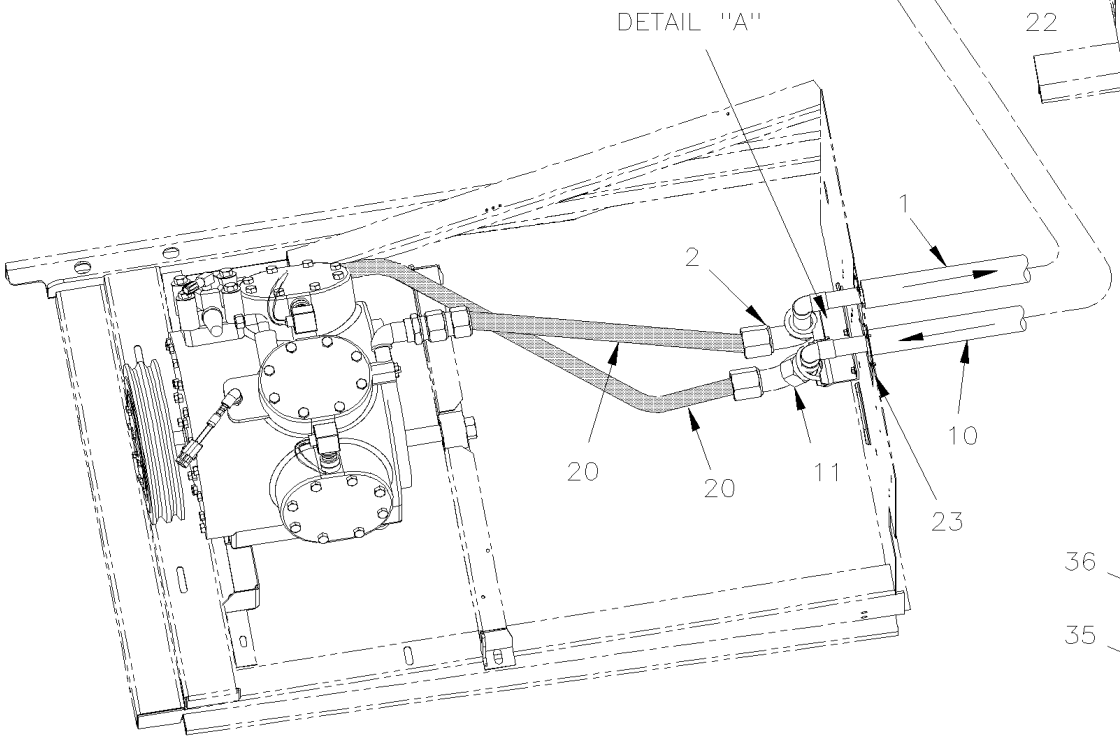

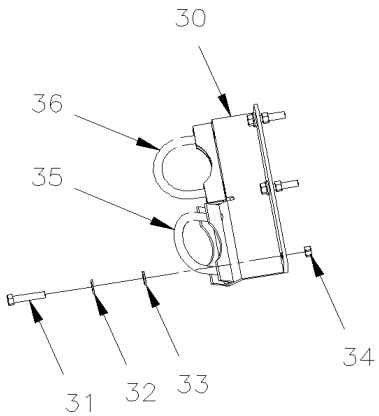

DETAIL "A"

From Y-7046 To 8-9339		Date:07/2024	PAGE:Y2-2222-15

A/C LINE REAR SECTION W/05G

Item#	Part	Description	XLII 45	XLII MTH40	XLII MTH45	XLII MTH45E	NOTES
1	453539	TUBE ASSY, PRESSURE / A/C COMPRESSOR To 2-7762	1				
1	454016	TUBE ASSY, PRESSURE / A/C COMPRESSOR From 2-7763	1				
1	453601	TUBE ASSY, PRESSURE / A/C COMPRESSOR / W/"RICON"	1				R
1	453608	TUBE ASSY, PRESSURE / A/C COMPRESSOR / W/"RICON" To 2-7863	1				F
1	453793	TUBE ASSY, PRESSURE / A/C COMPRESSOR W/"RICON" From 2-7864	1				F
1	453540	TUBE ASSY, PRESSURE / A/C COMPRESSOR		1		1	
1	453538	TUBE ASSY, PRESSURE / A/C COMPRESSOR			1		
2	501718	ADAPTER JIC @ BRAZE W/O-RING / / #16JIC-Mx#18BRAZE-F BR	1	1	1	1	
. NS	501802	. O-RING / ORS FITTING / #16 NEO	1	1	1	1	
3	501718	ADAPTER JIC @ BRAZE W/O-RING / / #16JIC-Mx#18BRAZE-F BR	1	1	1	1	
. NS	501802	. O-RING / ORS FITTING / #16 NEO	1	1	1	1	
10	Call order desk	TUBE ASSY, VACUUM / A/C COMPRESSOR	1				P
10	453600	TUBE ASSY, VACUUM / A/C COMPRESSOR / W/"RICON" To 4-8278	1				R
10	453871P	TUBE ASSY, VACUUM / A/C COMPRESSOR / W/"RICON" From 4-8279	1				R
10	453609	TUBE ASSY, VACUUM / A/C COMPRESSOR / W/"RICON" To 4-8278	1				F
10	453870	TUBE ASSY, VACUUM / A/C COMPRESSOR / W/"RICON" From 4-8279	1				F
10	453467P	TUBE ASSY, VACUUM / A/C COMPRESSOR		1		1	
10	Call order desk	TUBE ASSY, VACUUM / A/C COMPRESSOR To 6-8805			1		P
10	454244	TUBE ASSY, VACUUM / A/C COMPRESSOR From 6-8806			1		
NS	453723	SUPPORT PIPE From 2-7864	1				
11	501717	. ADAPTER JIC @ BRAZE W/O-RING / / #20JIC-Mx#22BRAZE-F BR	1	1	1	1	
. NS	501803	. . O-RING / ORS FITTING / #20 NEO	1	1	1	1	
12	501717	. ADAPTER JIC @ BRAZE W/O-RING / / #20JIC-Mx#22BRAZE-F BR	1	1	1	1	
. NS	501803	. . O-RING / ORS FITTING / #20 NEO	1	1	1	1	
13	5011099	. ADAPTER "TUBE-O" @ BRAZE / #12TUBE-O-Mx#14 BR	1	1	1	1	
20	**Y2-2245-00**	**A/C COMPRESSOR 05G - INSTALLATION**					
21	**Y2-2270-00**	**RECEIVER TANK & FILTER DRYER**					
22	326738	PLATE CLOSING AROUND PIPE / SMALL	1		1		
22	453677	PLATE CLOSING AROUND PIPES / W/"RICON"	1		1		F
23	483041	PLATE CLOSING AROUND PIPE		1	1	1	
30	457411	SUPPORT	1				
31	502758	SCREW CAP HEX M6-1.0x30 G8.8 N500	3				
32	500411	WASHER FL .260x.697x.050 SS	3				
33	502768	WASHER FL RUB .312x.625x.125 NEO	3				
34	5001182	NUT HEX NYRT M6-1.0 SS	3				
35	540057	U-CLAMP / 1 3/8"	1				
36	540058	U-CLAMP / 1 5/8"	1				
		F) FRONT SECTION WITH W.C.L. "RICON"					
		R) REAR SECTION WITH W.C.L. "RICON"					

From Y-7046 To 8-9339		Date:07/2024	PAGE:Y2-2222-15

A/C LINE REAR SECTION W/05G

Item#	Part	Description	XLII 45	XLII MTH40	XLII MTH45	XLII MTH45E	NOTES
		P) CALL ORDER DESK FOR SPECIFIC APPLICATION (V.I.N.)					

From Y-7046 To 8-9339		Date:07/2024	PAGE:Y2-2222-20

HEATER LINE & PIPING - CENTRAL SYSTEM

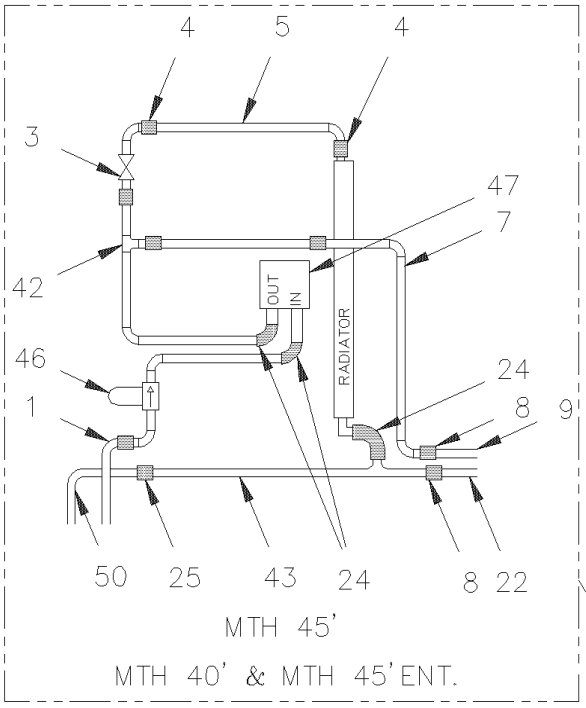

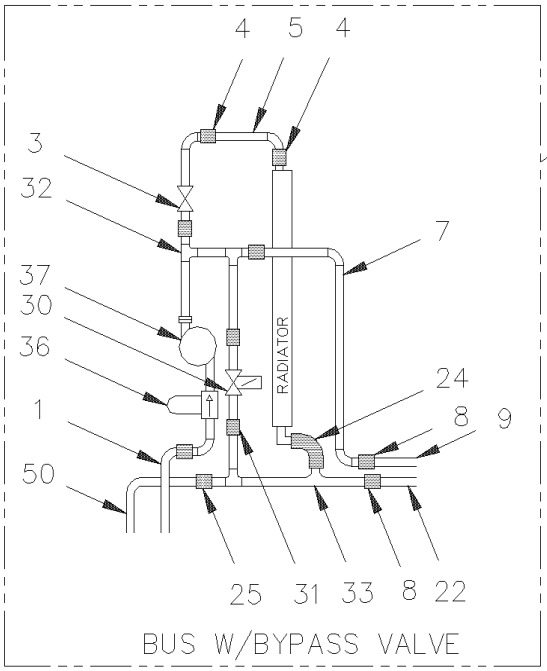

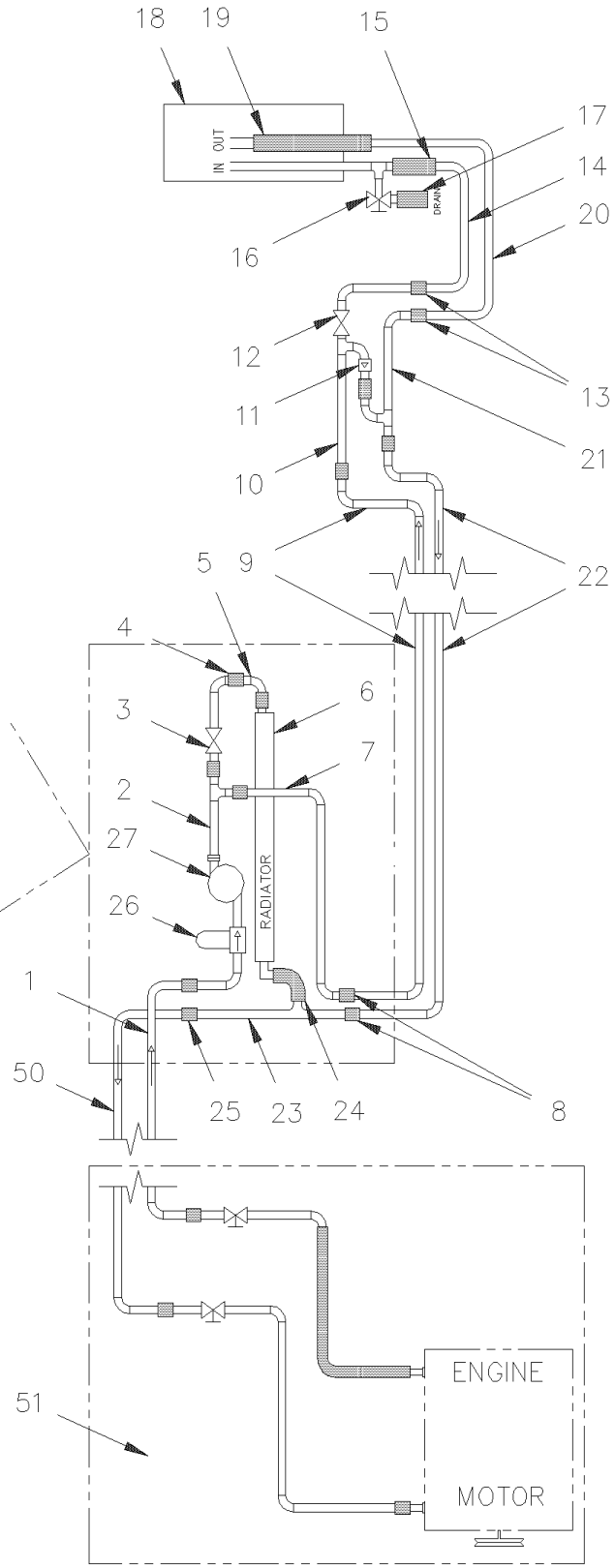

From Y-7046 To 8-9339		Date:07/2024	PAGE:Y2-2222-20

HEATER LINE & PIPING - CENTRAL SYSTEM

Item#	Part	Description	XLII 45	XLII MTH40	XLII MTH45	XLII MTH45E	NOTES
1	Call order desk	PIPE ASSY HEATING / RETURN LINE		1		1	P S
1	372029	PIPE ASSY HEATING / FEED LINE	1		1		
2	371744	PIPE ASSY / WATER PUMP OUTLET	1				C
3	**Y2-2207-00**	**WATER VALVE - W/MAIN HEATER**					
4	051383	HOSE / W/CENTRAL A/C SYSTEM / 1 3/8" I.D. X 150MM	2	2	2	2	
5	371745	PIPE ASSY / WATER VALVE OUTLET & HEATER	1	1	1	1	
6	**Y2-2205-00**	**HEATER & EVAPORATOR COIL - INSTALLATION**					
7	371746	TUBE ASSY / TO DRIVER'S HEATER To 4-8205	1	1	1	1	
7	374047	TUBE ASSY / TO DRIVER'S HEATER From 4-8206	1	1	1	1	
8	371532	HOSE 7/8" I.D. 6"	2	2	2	2	
9	372816	TUBE ASSY, HEATING		1			
9	373194	TUBE ASSY, HEATING	1		1		
9	373196	TUBE ASSY, HEATING				1	
10	372814	TUBE ASSY, DEFROSTER	1	1	1	1	
11	870807	STRAINER FILTER, WATER 1" 1/4" N.P.T.	1	1	1	1	
12	**Y2-2207-10**	**WATER VALVE - W/DRIVER'S HEATER**					
13	372053	HOSE 7/8" I.D. X 6.5" To 4-8205	2	2	2	2	
13	372191	HOSE / PIPE & BYPASS / 7/8" I.D. 10" From 4-8206	1	1	1	1	
14	372755	TUBE ASSY	1	1	1	1	
15	372751	HOSE 3/4" I.D.	1				
15	372758	HOSE 3/4" I.D. 19"		1		1	
17	560384	PLASTIC TUBING / 3/8" / CLEAR	AR	AR	AR	AR	
NS	504656	BUMPER PLUG / 3/8X41/64X1/4	1	1	1	1	
19	372750	HOSE 3/4" I.D.	1				
19	372759	HOSE 3/4" I.D.		1	1	1	
20	372843	TUBE ASSY	1	1	1	1	
20	372754	TUBE ASSY	1	1	1	1	
21	372815	TUBE ASSY, DEFROSTER	1	1	1	1	
22	372817	TUBE ASSY, HEATING		1			
22	373197	TUBE ASSY, HEATING				1	
22	373192	TUBE ASSY, HEATING	1		1		
23	372136	RETURN JCT TUBE ASSY / W/O BYPASS VALVE	1	1	1	1	
24	372131	ELBOW 90° REDUCER 1 1/8" I.D.W/3 1/4" x 1 3/8 I.D. W 5 1/4" C/C	1	1	1	1	Q
25	371855	HOSE 1 3/8" I.D. 3"	2	2	2	2	
26	**Y2-2222-00**	**HEATER LINE REAR SECTION - BUS**					
27	**Y2-2206-00**	**WATER PUMP #871052 & #871204**					
30	373110	WATER BYPASS VALVE /. (2222-00 & 20)	1				
31	372191	HOSE / PIPE & BYPASS / 7/8" I.D. 10"	2				
32	373307	PIPE ASSY / WATER PUMP OUTLET	1				B
33	373308	RETURN JCT TUBE ASSY / W/BYPASS VALVE	1				B
36	373329	FILTER ASSY W/TUBE	1				
37	**Y2-2206-00**	**WATER PUMP #871052 & #871204**					

From Y-7046 To 8-9339		Date:07/2024	PAGE:Y2-2222-20

HEATER LINE & PIPING - CENTRAL SYSTEM

Item#	Part	Description	XLII 45	XLII MTH40	XLII MTH45	XLII MTH45E	NOTES
42	373051	PIPE ASSY / WATER PUMP OUTLET		1		1	
43	373316	RETURN JCT TUBE ASSY / W/O BYPASS VALVE		1		1	
43	373316	RETURN JCT TUBE ASSY / W/O BYPASS VALVE			1		
46	373013	FILTER ASSY W/TUBE			1		
46	373333	FILTER ASSY W/TUBE		1		1	
47	**Y2-2206-50**	**WATER PUMP #871032**					
50	Call order desk	PIPE ASSY HEATING / RETURN LINE		1		1	P T
50	Call order desk	PIPE ASSY HEATING / RETURN LINE /W/"SLIDE-OUT"	1		1		P
51	**Y2-2222-00**	**HEATER LINE REAR SECTION - BUS**					
		B) WATER BYPASS VALVE					
		C) WATER BYPASS VALVE					
		Q) TUBE & HEATER COIL					
		S) FEED LINE					
		T) RETURN LINE					
		P) CALL ORDER DESK FOR SPECIFIC APPLICATION (V.I.N.)					

From Y-7046 To 3-8164		Date:07/2024	PAGE:Y2-2222-30
HEATER LINE REAR SECTION - MTH			

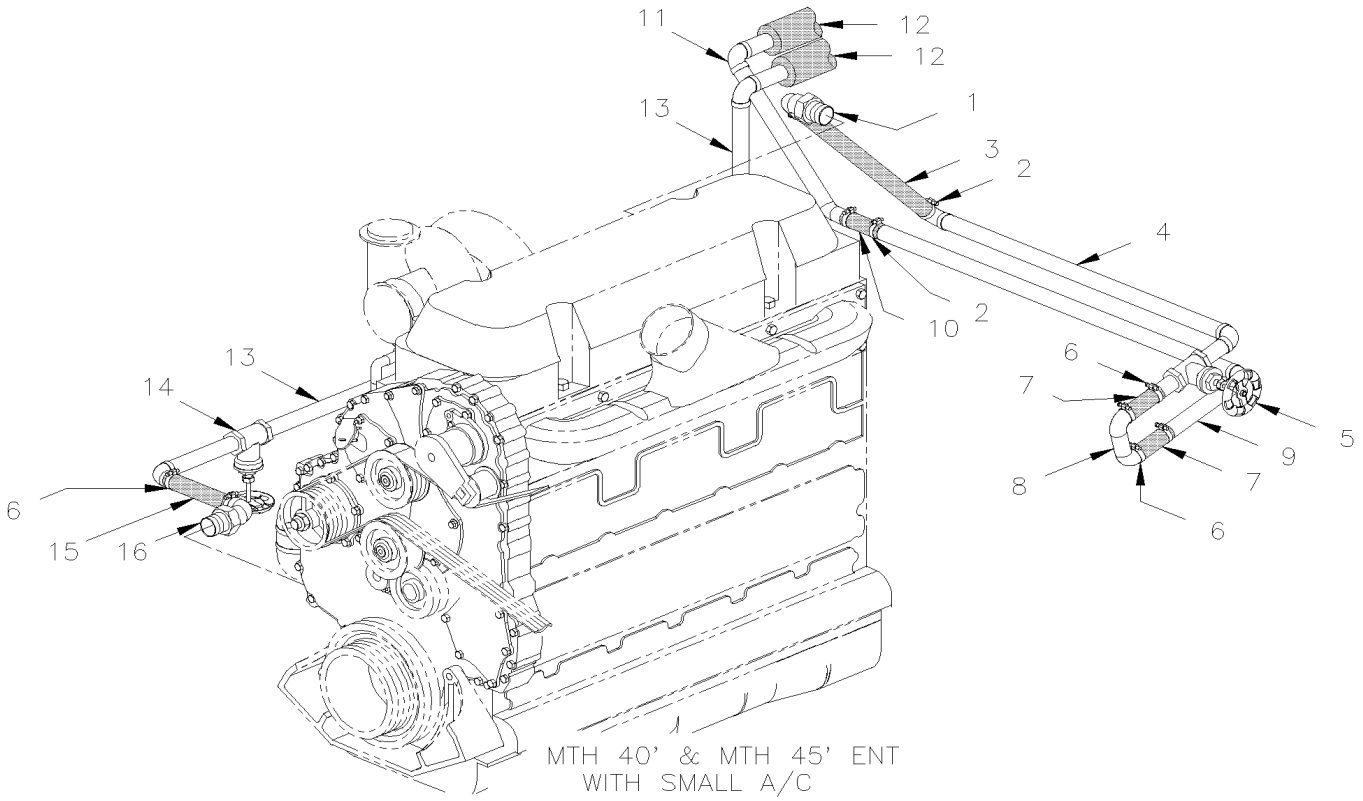

MTH 40' & MTH 45' ENT
WITH SMALL A/C

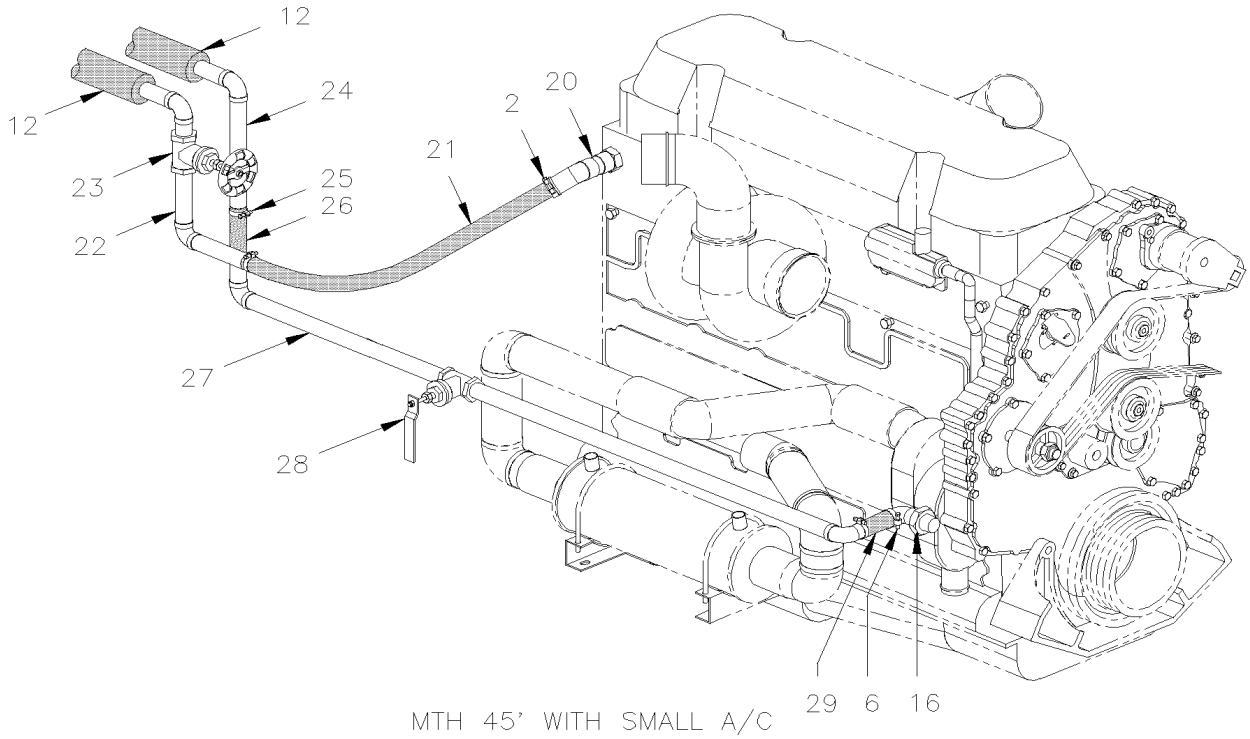

MTH 45' WITH SMALL A/C

From Y-7046 To 3-8164		Date:07/2024	PAGE:Y2-2222-30
HEATER LINE REAR SECTION - MTH			

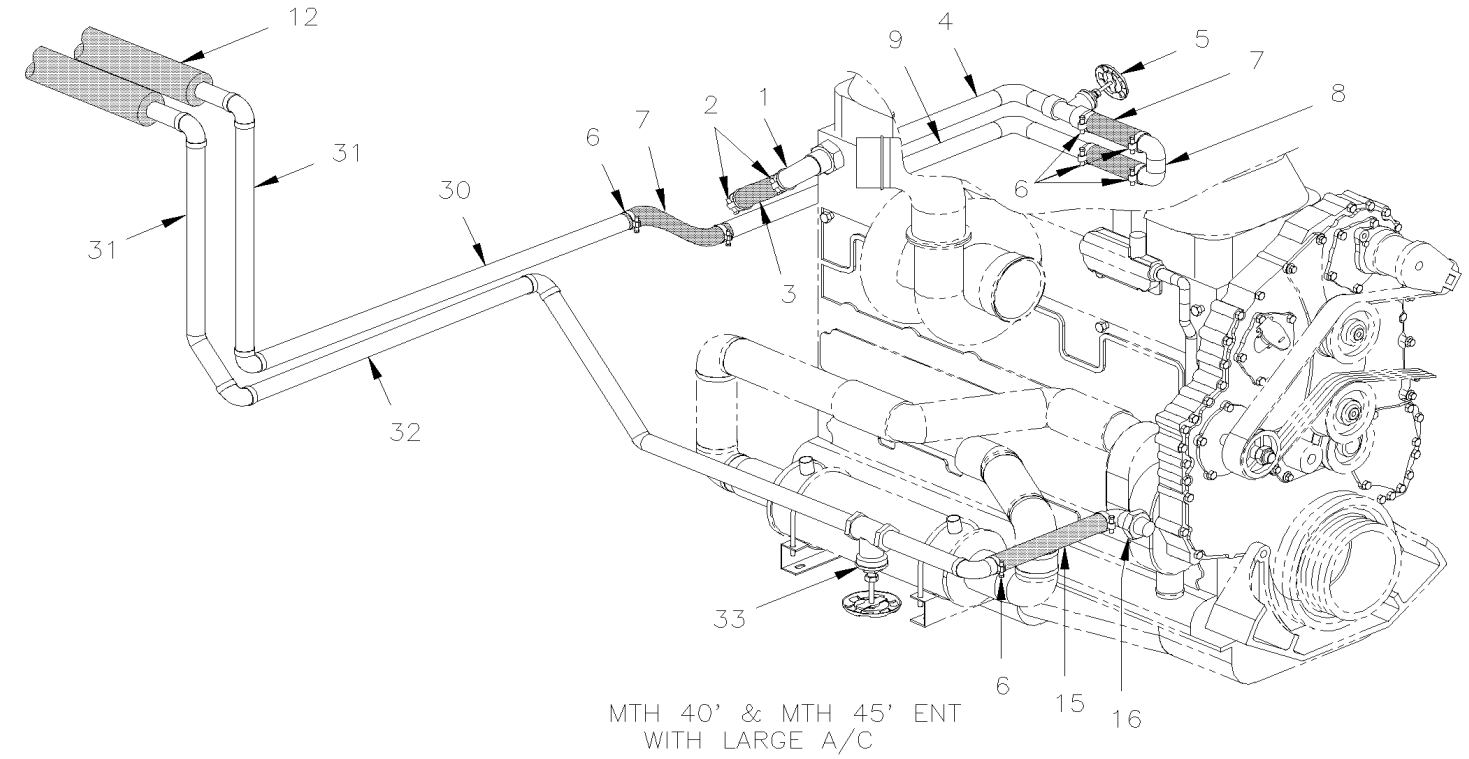

MTH 40' & MTH 45' ENT
WITH LARGE A/C

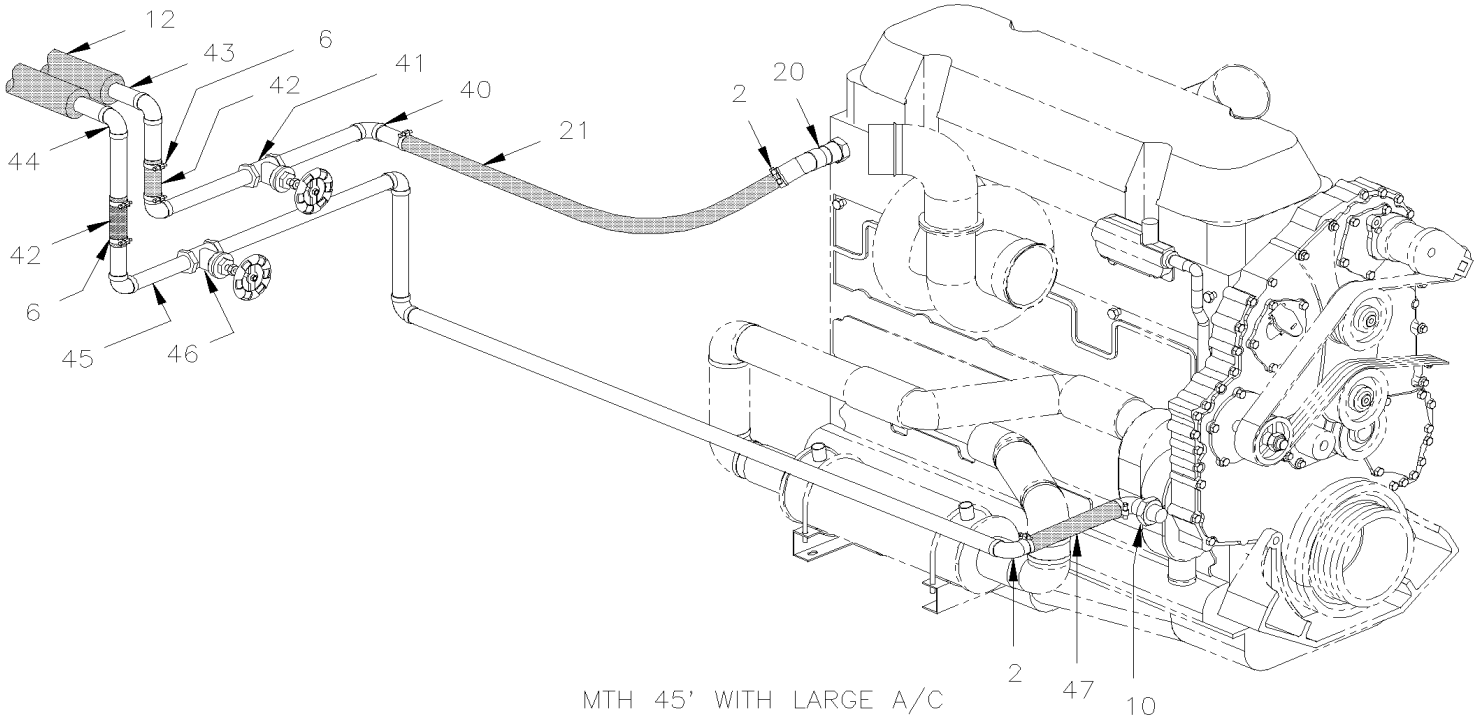

MTH 45' WITH LARGE A/C

From Y-7046 To 3-8164		Date:07/2024	PAGE:Y2-2222-30

HEATER LINE REAR SECTION - MTH

Item#	Part	Description	XLII 45	XLII MTH40	XLII MTH45	XLII MTH45E	NOTES
1	373217	ADAPTOR ELBOW 90° / CYLINDER HEAD EXIT / STD		1		1	
2	504319	HOSE CLAMP / 1"-1"1/2 SS / E.T. 16		AR		AR	
3	373298	HOSE 1 3/8" I.D. 216MM		1		1	
4	373224	PIPE		1		1	
5	501861	. GATE VALVE 1 ¼" (WELDED)		1		1	
6	504657	HOSE CLAMP / 1"1/16-2" C.T. 9424		AR		AR	
7	371855	HOSE 1 3/8" I.D. 3"		2		2	
8	373225	PIPE "U" SHAPE		1		1	
9	373226	PIPE		1		1	
10	371885	PIPE		1		1	
11	373398	PIPE		1		1	
12	506242	PIPE INSULATING / 1 3/8" I.D. X 1/2" TH. X 72 / APT13812		AR		AR	
13	373399	PIPE		1		1	
14	501861	. GATE VALVE 1 ¼" (WELDED)		1		1	
15	373145	HOSE 1 3/8" I.D. 260MM		1		1	
16	372958	ADAPTOR ELBOW 90° / WATER PUMP INLET		1		1	
20	373040	ADAPTOR ELBOW 45°/ CYLINDER HEAD EXIT			1		
21	373287	HOSE / ENGINE OUTLET / 1 3/8" I.D. 914MM			1		
22	373396	PIPE			1		
23	501861	. GATE VALVE 1 ¼" (WELDED)			1		
24	373397	PIPE			1		
25	504646	HOSE CLAMP / 11/16"-1"1/4 / C.T. 9412			2		
26	372053	HOSE 7/8" I.D. X 6.5"			1		
27	373066	PIPE / ENGINE INLET			1		
28	501958	. GATE VALVE 7/8" (WELDED)			1		
29	373236	HOSE / ENGINE INLET / 1 3/8" I.D. 195MM			1		
30	373101	PIPE / W/O HEATER		1		1	
31	Call order desk	PIPE ASSY HEATING / RETURN LINE		2		2	P
32	373079	PIPE RETURN / ENGINE WATER PUMP		1		1	
33	501861	. GATE VALVE 1 ¼" (WELDED)		1		1	
40	373052	PIPE ASSY HEATING / FEED LINE			1		
41	501861	. GATE VALVE 1 ¼" (WELDED)			1		
42	051383	HOSE / W/CENTRAL A/C SYSTEM / 1 3/8" I.D. X 150MM			2		
43	Call order desk	PIPE ASSY HEATING / FEED LINE			1		P
43	Call order desk	PIPE ASSY HEATING / FEED LINE /W/"SLIDE-OUT" To 2-7908			1		P
43	Call order desk	PIPE ASSY HEATING / FEED LINE /W/"SLIDE-OUT" From 2-7909			1		P
44	Call order desk	PIPE ASSY HEATING / RETURN LINE /W/"SLIDE-OUT"			1		P
44	Call order desk	PIPE ASSY HEATING / RETURN LINE /W/"SLIDE-OUT" To 2-7908			1		P
44	Call order desk	PIPE ASSY HEATING / RETURN LINE /W/"SLIDE-OUT" From 2-7909			1		P
45	373014	PIPE RETURN / ENGINE WATER PUMP			1		
46	501861	. GATE VALVE 1 ¼" (WELDED)			1		
47	371858	HOSE 1 3/8" I.D. 7"			1		

From Y-7046 To 3-8164		Date:07/2024	PAGE:Y2-2222-30

HEATER LINE REAR SECTION - MTH

Item#	Part	Description	XLII 45	XLII MTH40	XLII MTH45	XLII MTH45E	NOTES
		P) CALL ORDER DESK FOR SPECIFIC APPLICATION (V.I.N.)					

From 4-8165 To 8-9339		Date:07/2024	PAGE:Y2-2222-31
HEATER LINE REAR SECTION - MTH			

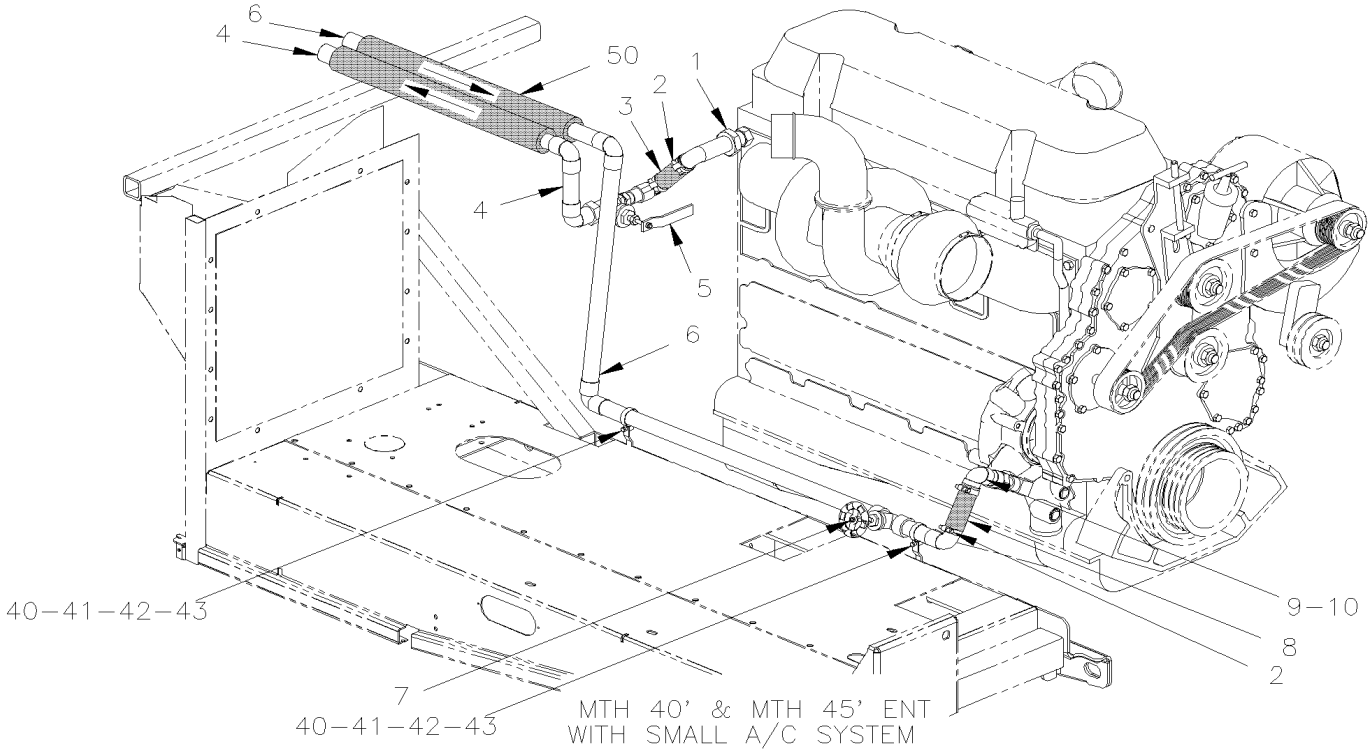

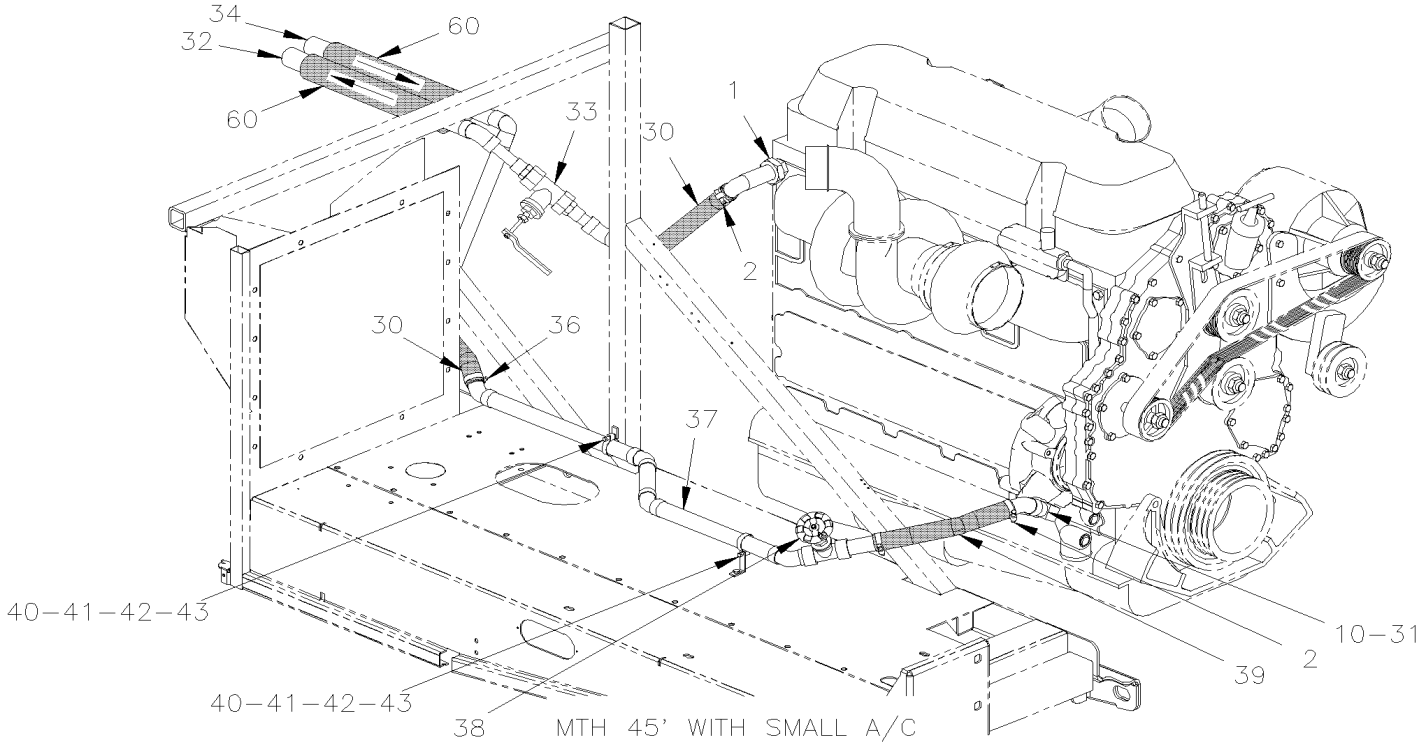

From 4-8165 To 8-9339		Date:07/2024	PAGE:Y2-2222-31
HEATER LINE REAR SECTION - MTH			

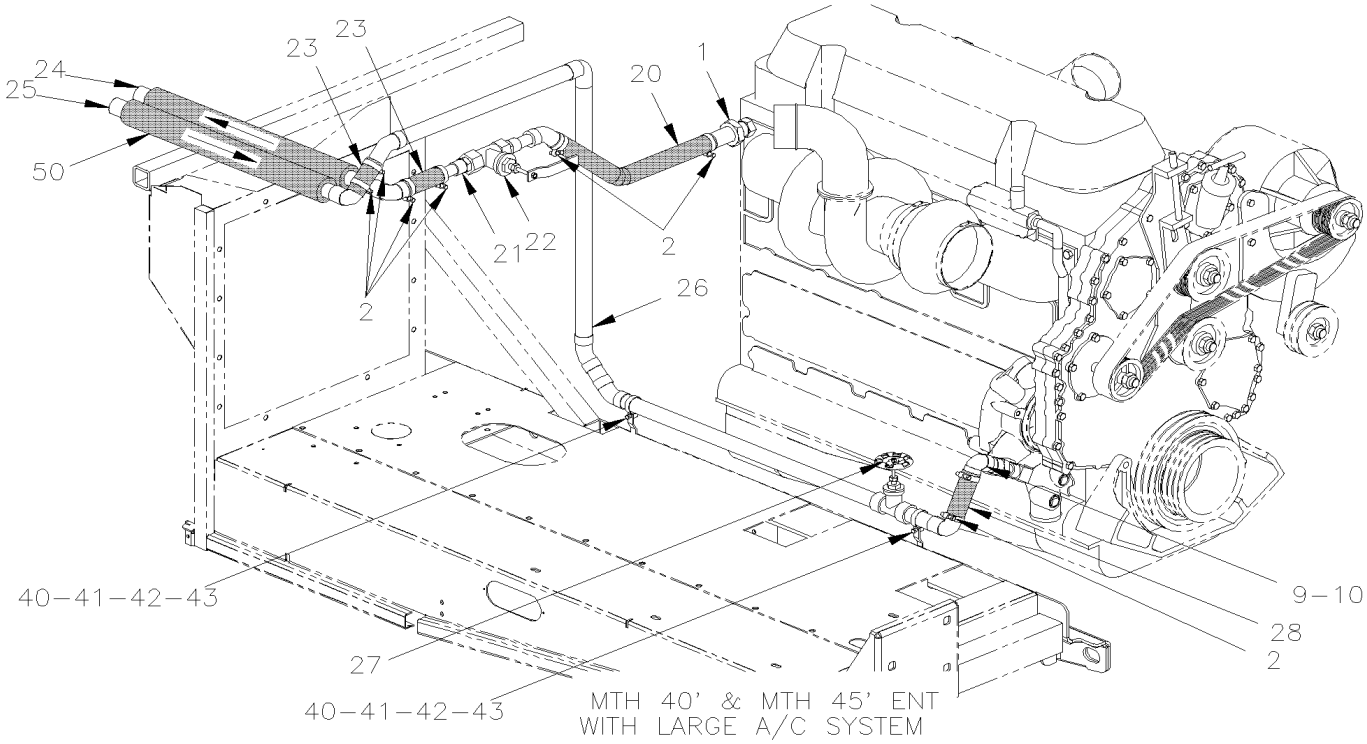

MTH 40' & MTH 45' ENT WITH LARGE A/C SYSTEM

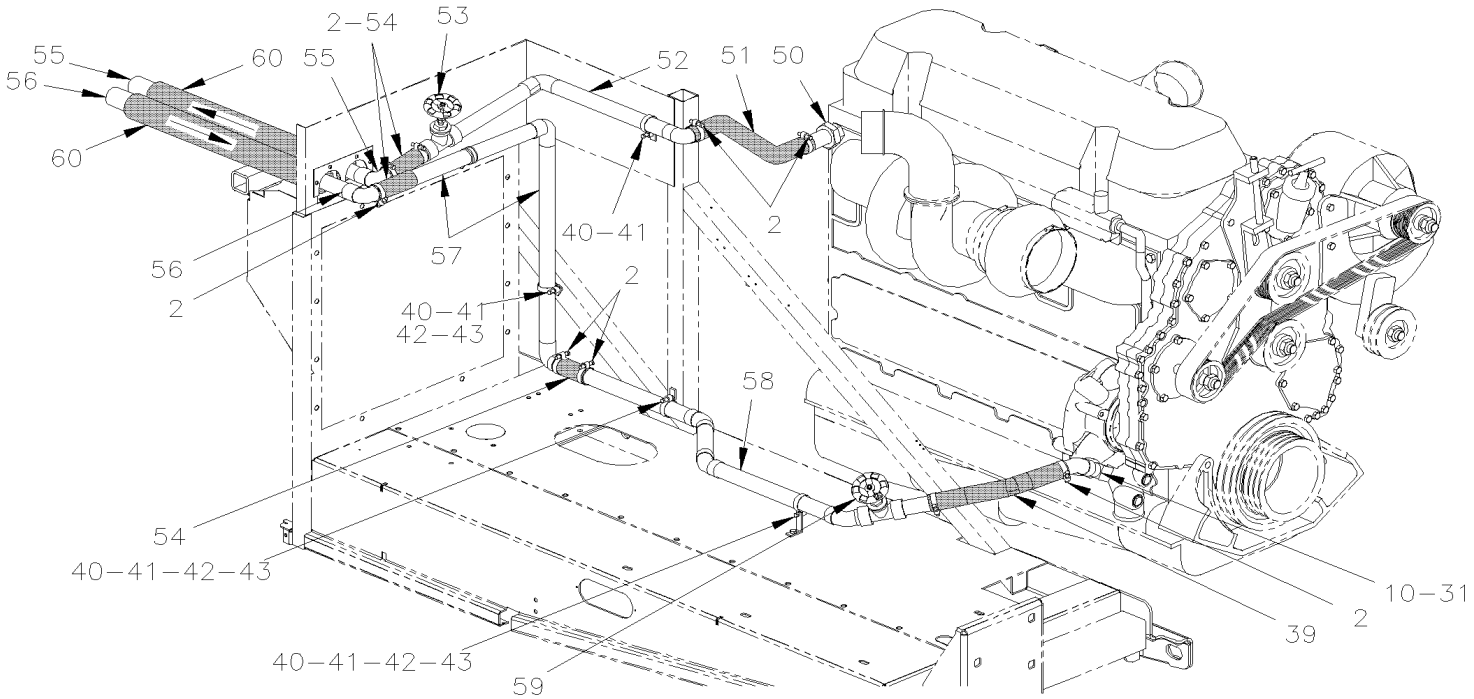

MTH 45' WITH LARGE A/C

From 4-8165 To 8-9339		Date:07/2024	PAGE:Y2-2222-31

HEATER LINE REAR SECTION - MTH

Item#	Part	Description	XLII 45	XLII MTH40	XLII MTH45	XLII MTH45E	NOTES
1	373866	HOSE ADAPTOR ELBOW 90° 1 3/8" X 1" NPT / CYLINDER HEAD EXIT		1		1	
1	373902	HOSE ADAPTOR STRAIGHT 1 3/8" X 1" NPT / CYLINDER HEAD EXIT		1		1	
2	504657	HOSE CLAMP / 1"1/16-2" C.T. 9424		1		1	
3	373298	HOSE 1 3/8" I.D. 216MM		1		1	
4	Call order desk	PIPE ASSY HEATING / FEED LINE / W/SMALL AC SYSTEM To 5-8561		1		1	P
4	Call order desk	PIPE ASSY HEATING / FEED LINE / W/SMALL A/C SYSTHEM From 5-8562 To 7-9095		1		1	P
4	Call order desk	PIPE ASSY HEATING / FEED LINE / W/SMALL A/C SYSTHEM From 7-9096				1	P
5	870966	. BALL VALVE 1" NPT-F To 8-9174		1		1	
5	871419	. BALL VALVE 1" NPT-F From 8-9175		1		1	
5	501553	. ADAPTER / COPPER @ PIPE / 1Fx1NPT-M		2		2	
6	Call order desk	PIPE ASSY HEATING / RETURN LINE / W/SMALL A/C SYSTHEM To 7-9095		1		1	P
6	Call order desk	PIPE ASSY HEATING / RETURN LINE / W/SMALL A/C SYSTHEM From 7-9096				1	P
7	501958	. GATE VALVE 7/8" (WELDED)		1		1	
8	371535	. HOSE 1 3/8" I.D. X 127MM To 5-8492		1		1	
8	374136	. ELBOW 90° X 1 3/8" I.D. / 75MM x 194MM C/C / SILICONE From 5-8493		1		1	
9	373944	ADAPTOR ELBOW 90° 137MM / WATER PUMP INLET / W/SMALL A To 5-8492		1		1	F
9	373894	ADAPTOR STRAIGHT 86MM / WATER PUMP INLET From 5-8493		1		1	
10	507339	STREET ELBOW 90º / PIPE FITTING / 3/4NPT-Mx3/4NPT-F BR		1		1	
20	373954	HOSE 1 3/8" I.D. 610MM		1		1	
21	373945	PIPE ASSY HEATING / FEED LINE		1		1	
22	870966	. BALL VALVE 1" NPT-F To 8-9174		1		1	
22	871419	. BALL VALVE 1" NPT-F From 8-9175				1	
22	501997	. ADAPTER / COPPER @ PIPE / 1 1/4Fx1NPT-M		2		2	
23	051383	. HOSE / W/CENTRAL A/C SYSTEM / 1 3/8" I.D. X 150MM		1		1	
24	373946P	PIPE ASSY HEATING / FEED LINE To 6-8805		1		1	
24	Call order desk	PIPE ASSY HEATING / FEED LINE From 6-8806		1		1	P
25	372670P	PIPE ASSY HEATING / RETURN LINE To 6-8805		1		1	
25	Call order desk	PIPE ASSY HEATING / RETURN LINE From 6-8806		1		1	P
26	372753	PIPE ASSY HEATING / RETURN LINE		1		1	
27	501861	. GATE VALVE 1 ¼" (WELDED)		1		1	
28	371858	. HOSE 1 3/8" I.D. 7" To 5-8492		1		1	F
28	374136	. ELBOW 90° X 1 3/8" I.D. / 75MM x 194MM C/C / SILICONE From 5-8493		1		1	
30	373942	HOSE 1 3/8" x 305MM			1		
31	373907	ADAPTOR ELBOW 45° / WATER PUMP INLET			1		
32	Call order desk	PIPE ASSY HEATING / FEED LINE To 5-8561			1		P
32	Call order desk	PIPE ASSY HEATING / FEED LINE From 5-8562			1		P
33	870966	. BALL VALVE 1" NPT-F To 8-9174			1		
33	871419	. BALL VALVE 1" NPT-F From 8-9175			1		
33	501553	. ADAPTER / COPPER @ PIPE / 1Fx1NPT-M			2		
34	Call order desk	PIPE ASSY HEATING / RETURN LINE			1		P
35	372837	HOSE 7/8" I.D. 16 1/2"			1		
36	504646	HOSE CLAMP / 11/16"-1"1/4 / C.T. 9412			4		

From 4-8165 To 8-9339		Date:07/2024	PAGE:Y2-2222-31

HEATER LINE REAR SECTION - MTH

Item#	Part	Description	XLII 45	XLII MTH40	XLII MTH45	XLII MTH45E	NOTES
37	Call order desk	PIPE RETURN / ENGINE WATER PUMP			1		P
38	501861	. GATE VALVE 1 ¼" (WELDED)			1		
39	373145	HOSE 1 3/8" I.D. 260MM		1	1	1	
40	952633	CLAMP / 7/8" I.D.		AR	AR	AR	
40	952641	CLAMP P STL ZP RUB 34.9 ID		AR	AR	AR	
41	502746	SCREW MA PAN PH M5-0.8x20 SS BK		AR	AR	AR	
42	500804	WASHER FL .203x.500x.047 N500		AR	AR	AR	
43	502841	NUT HEX NYRT M5-0.8 N500		AR	AR	AR	
50	373888	HOSE ADAPTOR ELBOW 45° 1 3/8" X 1" NPT / CYLINDER HEAD EXIT			1		
51	503392	HOSE SILICONE 4PLY 1 3/8" I.D. x 4'			AR		
52	Call order desk	PIPE ASSY HEATING / FEED LINE			1		P
52	Call order desk	PIPE ASSY HEATING / FEED LINE			1		P
53	501861	. GATE VALVE 1 ¼" (WELDED)			1		
54	371855	HOSE 1 3/8" I.D. 3"			2		
55	Call order desk	PIPE ASSY HEATING / FEED LINE			1		P
55	Call order desk	PIPE ASSY HEATING / FEED LINE /W/"SLIDE-OUT" To 6-8805			1		P
56	Call order desk	PIPE ASSY HEATING / RETURN LINE			1		P
56	Call order desk	PIPE ASSY HEATING / RETURN LINE /W/"SLIDE-OUT" To 6-8805			1		P
57	Call order desk	PIPE ASSY HEATING / RETURN LINE			1		P
58	373901P	PIPE RETURN / ENGINE WATER PUMP			1		
59	501861	. GATE VALVE 1 ¼" (WELDED)			1		
60	506242	PIPE INSULATING / 1 3/8" I.D. X 1/2" TH. X 72 / APT13812		AR	AR	AR	
NS	WB04-09	SEE WARRANTY BULLETIN		1	1	1	
		F) FOR PRODUCT IMPROVEMENT, ASK PARTS #373894 & #374136. SEE WARRANTY BULLETIN					
		P) CALL ORDER DESK FOR SPECIFIC APPLICATION (V.I.N.)					

From Y-7046 To 3-8164		Date:07/2024	PAGE:Y2-2222-50
SMALL A/C LINES & HOSES WITH DETROIT S-60 & R134A			

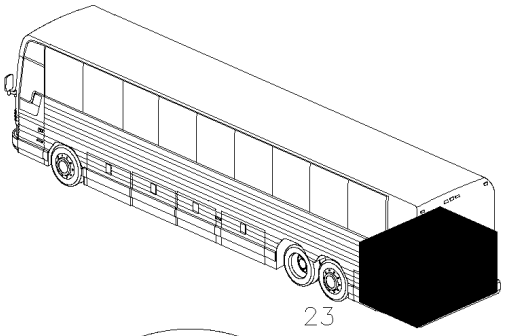

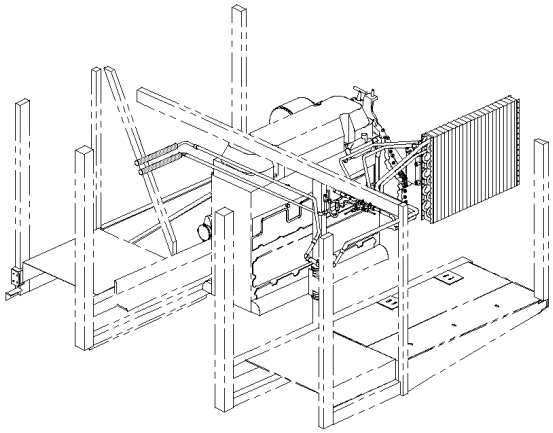

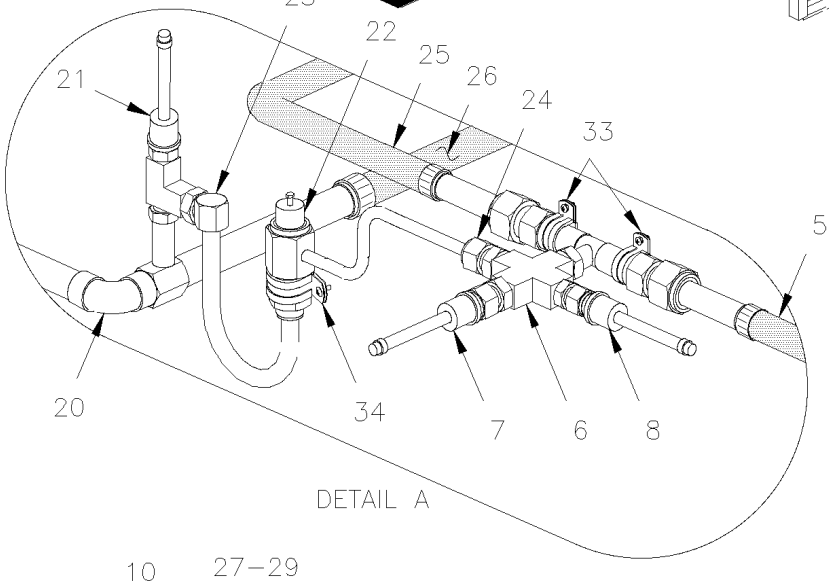

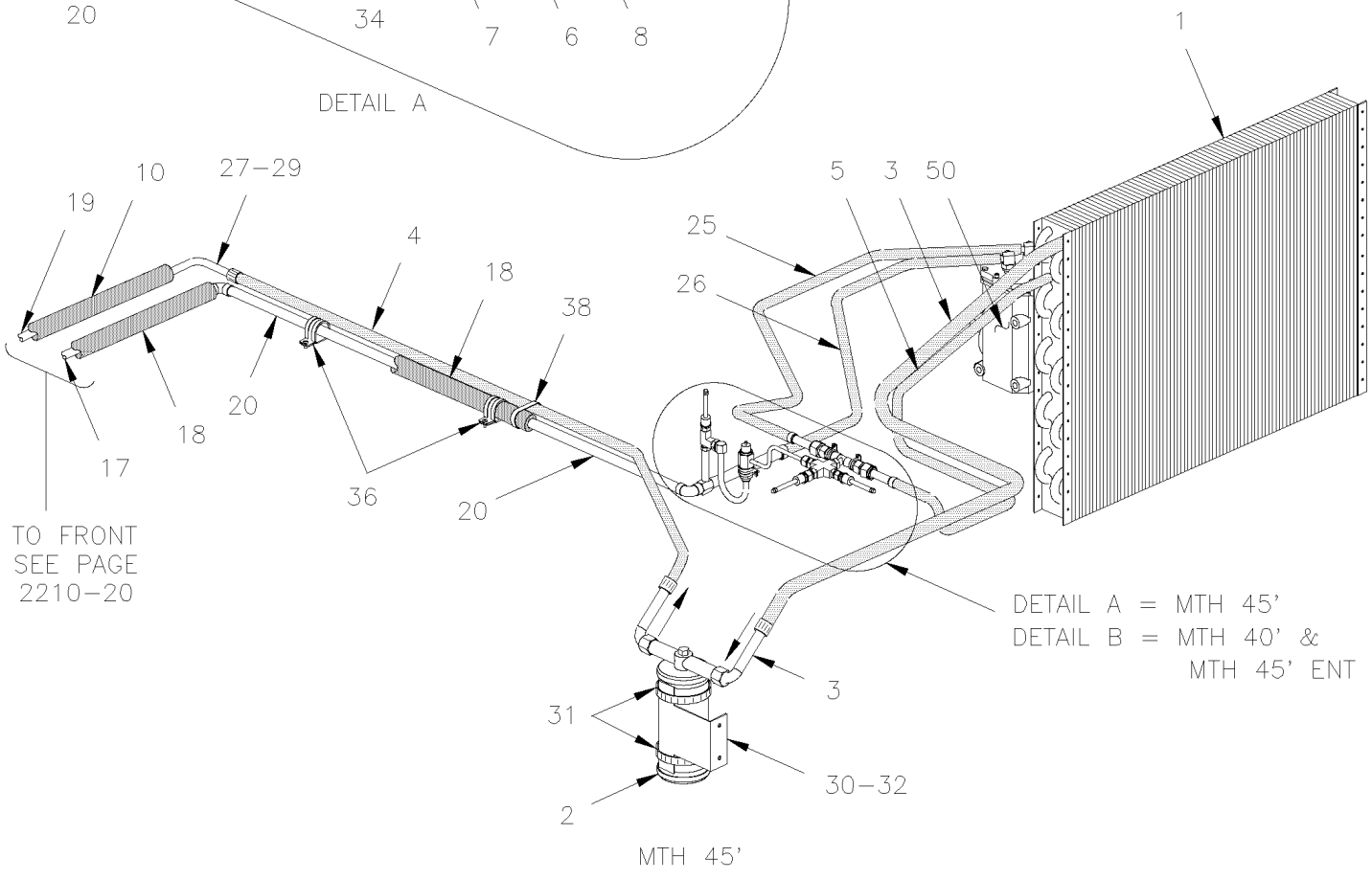

From Y-7046 To 3-8164		Date:07/2024	PAGE:Y2-2222-50
SMALL A/C LINES & HOSES WITH DETROIT S-60 & R134A			

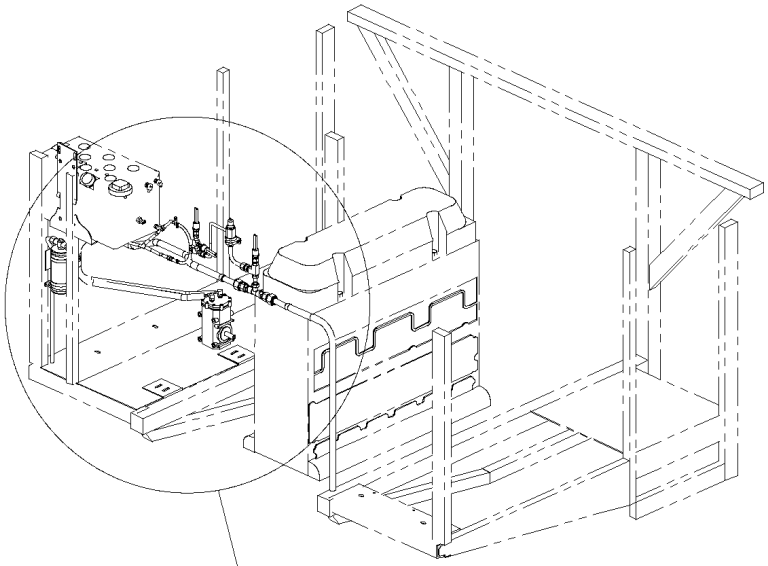

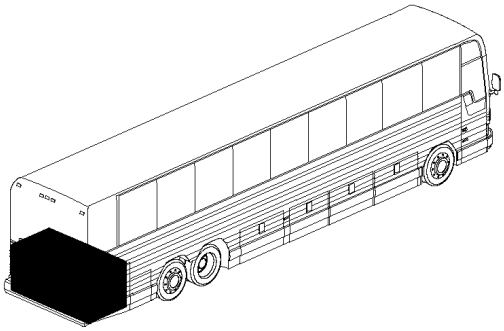

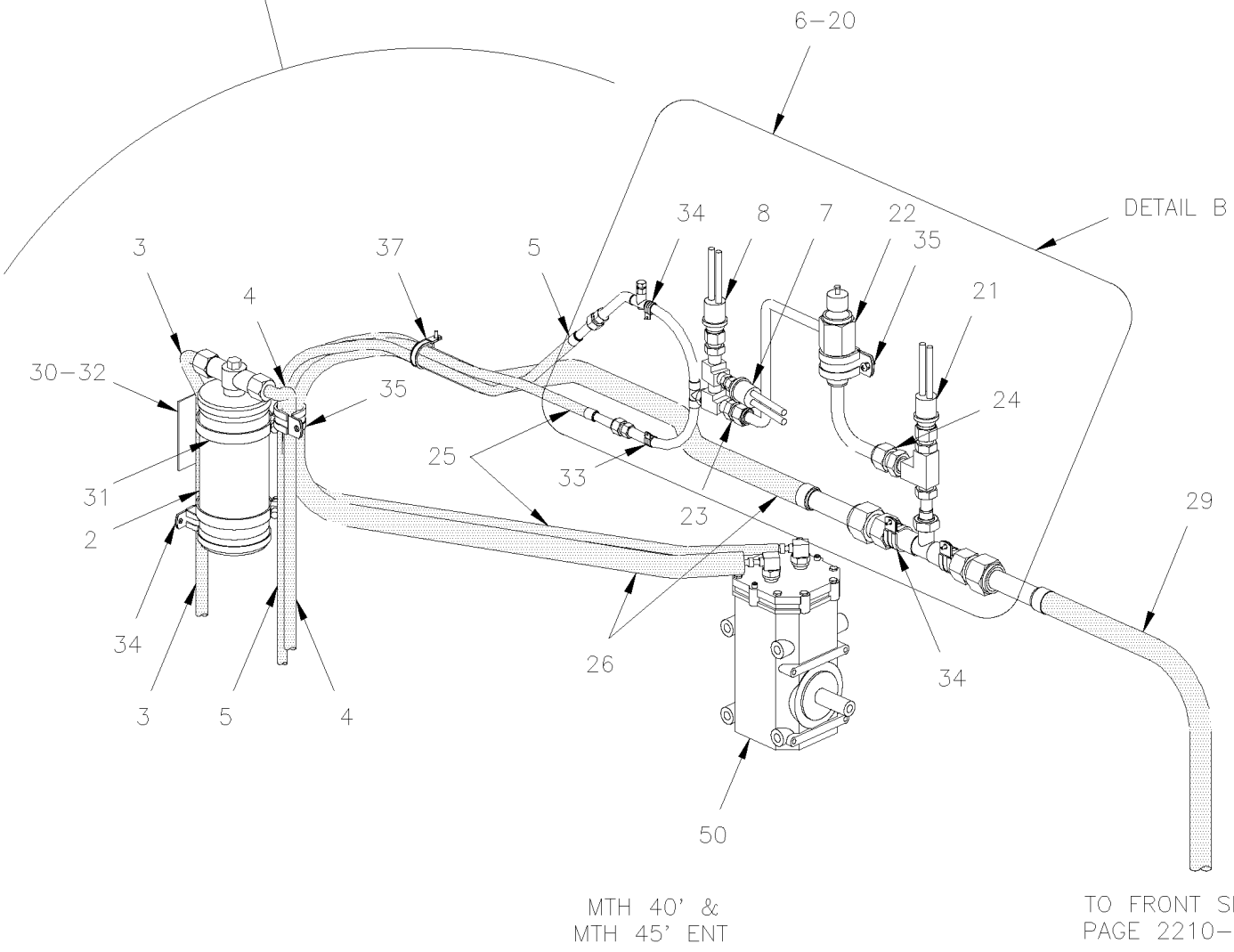

From Y-7046 To 3-8164		Date:07/2024	PAGE:Y2-2222-50
SMALL A/C LINES & HOSES WITH DETROIT S-60 & R134A			

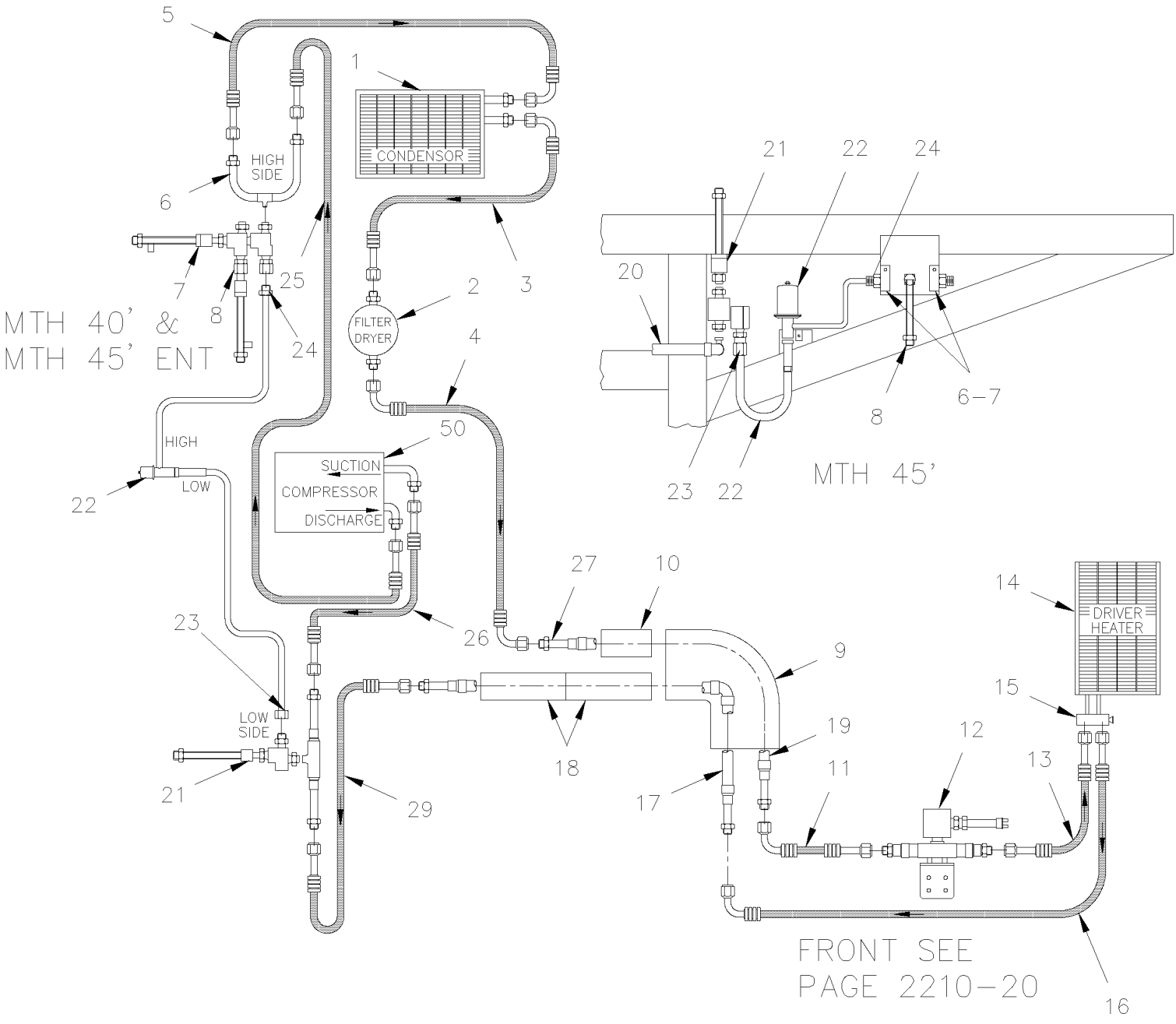

From Y-7046 To 3-8164		Date:07/2024	PAGE:Y2-2222-50

SMALL A/C LINES & HOSES WITH DETROIT S-60 & R134A

Item#	Part	Description	XLII 45	XLII MTH40	XLII MTH45	XLII MTH45E	NOTES
1	950018	CONDENSOR COIL To Y-7367		1	1	1	
1	950335	CONDENSER COIL From Y-7368		1	1	1	
1	**IS14130**	**RETROFIT KIT FOR OBSOLETED CONDENSORS 950018 & 950335**		1	1	1	
2	950220	DRYER, RECEIVER TANK		1	1	1	
3	453474	HOSE ASSY / CONDENSER & RECEIVER / #6 3900MM		1		1	
. NS	507278	. O-RING / ORS FITTING / #4 NEO		2		2	
3	455245	HOSE ASSY / CONDENSER & RECEIVER / #6 3900MM		1		1	S
. NS	507278	. O-RING / ORS FITTING / #4 NEO		2		2	S
3	453170	HOSE ASSY / CONDENSER & RECEIVER / #6 1100MM			1		
. NS	507278	. O-RING / ORS FITTING / #4 NEO			2		
3	455191	HOSE ASSY / CONDENSER & RECEIVER / #6 1100MM			1		S
. NS	507278	. O-RING / ORS FITTING / #4 NEO			2		S
4	453469	HOSE ASSY / DRYER OUTLET / #6 3850MM		1		1	
. NS	507278	. O-RING / ORS FITTING / #4 NEO		2		2	
4	455240	HOSE ASSY / DRYER OUTLET / #6 3850MM		1		1	S
. NS	507278	. O-RING / ORS FITTING / #4 NEO		2		2	S
4	453313	HOSE ASSY / DRYER OUTLET / W/R-134a / #6 1664MM			1		
. NS	507278	. O-RING / ORS FITTING / #4 NEO			2		
4	455209	HOSE ASSY / DRYER OUTLET / W/R-134a / #6 1664MM			1		S
. NS	507278	. O-RING / ORS FITTING / #4 NEO			2		S
5	453471	HOSE ASSY /COND INLET & HI-SIDE / W/R-134a/ #8 4750MM		1		1	
. NS	507343	. O-RING / ORS FITTING / #8 NEO		2		2	
5	455242	HOSE ASSY /COND INLET & HI-SIDE / W/R-134a/ #8 4750MM		1		1	S
. NS	507343	. O-RING / ORS FITTING / #8 NEO		2		2	S
5	453169	HOSE ASSY /COND INLET & HI-SIDE / W/R-134a/ #8 860MM			1		
. NS	507343	. O-RING / ORS FITTING / #8 NEO			2		
5	455190	HOSE ASSY /COND INLET & HI-SIDE / W/R-134a/ #8 860MM			1		S
. NS	507343	. O-RING / ORS FITTING / #8 NEO			2		S
6	453437	TUBE ASSY / HI&LOW SIDE W/PLATE HOLDER		1		1	
6	453383	TUBE ASSY / HI-SIDE W/R134A			1		
7	453380	. PRESSURE SWITCH N.C. 350-245 20PS001MB350K245R		1	1	1	
8	452832	. PRESSURE SWITCH N.O. 170-130 20SP001MA170J130J		1	1	1	
NS	950249	. SCHRADER VALVE 1/4NPT-M		2	2	2	
9	506283	PIPE INSULATING / 1 5/8" I.D. X 1/2" TH. X 72 / APT15812		AR	AR	AR	
10	506215	PIPE INSULATING / 1/2" I.D. X 1/2" TH. X 72" / APT01212		AR	AR	AR	
11	453333	HOSE ASSY / PIPE & VALVE #6 205MM		1	1	1	
. NS	507278	. O-RING / ORS FITTING / #4 NEO		2	2	2	
11	455212	HOSE ASSY / PIPE & VALVE #6 205MM		1	1	1	S
. NS	507278	. O-RING / ORS FITTING / #4 NEO		2	2	2	S
12	**Y2-2208-10**	**REFRIGERANT SOLENOID VALVE**					
13	453331	HOSE ASSY / VALVE & EVAPORATOR / #6 250MM		1	1	1	
. NS	507278	. O-RING / ORS FITTING / #4 NEO		2	2	2	

From Y-7046 To 3-8164		Date:07/2024	PAGE:Y2-2222-50

SMALL A/C LINES & HOSES WITH DETROIT S-60 & R134A

Item#	Part	Description	XLII 45	XLII MTH40	XLII MTH45	XLII MTH45E	NOTES
13	455210	HOSE ASSY / VALVE & EVAPORATOR / #6 250MM		1	1	1	S
. NS	507278	. O-RING / ORS FITTING / #4 NEO		2	2	2	S
14	**Y2-2225-00**	**DRIVER'S HEATER & DEFROSTER ASSY**					
15	**Y2-2208-00**	**A/C EXPANSION VALVE**					
16	453332	HOSE ASSY / EXPANSION VALVE OUTLET / #10 820MM		1		1	
. NS	507344	. O-RING / ORS FITTING / #10 NEO		2		2	
16	455211	HOSE ASSY / EXPANSION VALVE OUTLET / #10 820MM		1		1	S
. NS	507344	. O-RING / ORS FITTING / #10 NEO		2		2	S
17	Call order desk	PIPE ASSY		1	1	1	P
18	506276	PIPE INSULATING / 7/8" I.D. X 1/2" TH. X 72 / APT07812		AR	AR	AR	
19	453319	PIPE ASSY		1	1	1	
20	453437	TUBE ASSY / HI&LOW SIDE W/PLATE HOLDER To 2-7888		1		1	
20	453727	TUBE ASSY / HI&LOW SIDE W/PLATE HOLDER From 2-7889		1		1	
20	452843	TUBE ASSY W/LOW PRESSURE SWITCH			1		
21	452831	. PRESSURE SWITCH N.O. 30-5 20SP001MA030C005C		1	1	1	
NS	950249	SCHRADER VALVE 1/4NPT-M		1	1	1	
22	452586	VALVE, BYPASS ASSY / W/R134A "U" SHAPE			1		
22	452434	VALVE, BYPASS ASSY / W/R134A		1		1	
22	950065	. BY-PASS VALVE		1		1	
23	5011080	MALE CONNECTOR / ORS FITTING / #6ORS-Mx1/4NPT-M STL		1	1	1	L
23	5011082	ADAPTOR / ORS@COPPER TUBE / #6ORS-Fx#6COPPER TUBE		1	1	1	L
24	5011079	MALE CONNECTOR / ORS FITTING / #4ORS-Mx1/4NPT-M STL		1	1	1	H
NS	5011081	ADAPTOR / ORS@COPPER TUBE / #4ORS-Fx#4COPPER TUBE		1	1	1	H
25	453472	HOSE ASSY / #8 1500MM		1		1	
25	455243	HOSE ASSY / #8 1500MM		1		1	S
. NS	507343	. O-RING / ORS FITTING / #8 NEO		2		2	S
. NS	950358	. PROTECTOR CAP LOW PRESSURE PORT / "TUBE-O"		1		1	S
25	453409	HOSE ASSY / #8 1055MM			1		
. NS	507343	. O-RING / ORS FITTING / #8 NEO			2		
. NS	950358	. PROTECTOR CAP LOW PRESSURE PORT / "TUBE-O"			1		
25	455225	HOSE ASSY / #8 1055MM			1		S
. NS	507343	. O-RING / ORS FITTING / #8 NEO			2		S
. NS	950358	. PROTECTOR CAP LOW PRESSURE PORT / "TUBE-O"			1		S
26	453473	HOSE ASSY / #12 1850MM		1		1	
. NS	507344	. O-RING / ORS FITTING / #10 NEO		2		2	
. NS	950367	. PROTECTOR CAP HIGH PRESSURE PORT / "TUBE-O"		1		1	
26	455244	HOSE ASSY / #12 1850MM		1		1	S
. NS	507344	. O-RING / ORS FITTING / #10 NEO		2		2	S
. NS	950367	. PROTECTOR CAP HIGH PRESSURE PORT / "TUBE-O"		1		1	S
26	453408	HOSE ASSY / COMPRESSOR INLET/W/R-134a / #12 654MM			1		
. NS	507344	. O-RING / ORS FITTING / #10 NEO			2		
. NS	950367	. PROTECTOR CAP HIGH PRESSURE PORT / "TUBE-O"			1		

From Y-7046 To 3-8164		Date:07/2024	PAGE:Y2-2222-50

SMALL A/C LINES & HOSES WITH DETROIT S-60 & R134A

Item#	Part	Description	XLII 45	XLII MTH40	XLII MTH45	XLII MTH45E	NOTES
26	455224	HOSE ASSY / COMPRESSOR INLET/W/R-134a / #12 654MM			1		S
. NS	507344	. O-RING / ORS FITTING / #10 NEO			2		S
. NS	950367	. PROTECTOR CAP HIGH PRESSURE PORT / "TUBE-O"			1		S
27	452437	PIPE ASSY		1	1	1	
29	453470	HOSE ASSY / #12 1725MM		1		1	
. NS	507344	. O-RING / ORS FITTING / #10 NEO		2		2	
29	455241	HOSE ASSY / #12 1725MM		1		1	S
. NS	507344	. O-RING / ORS FITTING / #10 NEO		2		2	S
30	452375	SUPPORT RECEIVER TANK			1		
31	504025	HOSE CLAMP / 2"5/16-3"1/4 SS / HS-44		2	2	2	
32	500923	SCREW TC CAP HEX 1/4-20x3/4 Z050		2	2	2	
33	952627	CLAMP / 1/2" I.D.		AR	AR	AR	
34	952629	CLAMP / 5/8" I.D.		AR	AR	AR	
35	952637	CLAMP / 1"1/16 I.D.		AR	AR	AR	
36	952639	CLAMP / 1"1/4 I.D.		AR	AR	AR	
37	562060	CLAMP / 1 3/4" I.D.		AR	AR	AR	
38	504637	CABLE TIE / 3/16" x 13"		AR	AR	AR	
NS	500642	SCREW TP PAN PH #10x3/4 Z050		AR	AR	AR	
NS	500613	SCREW TP PAN PH #10x1/2 Z050		AR	AR	AR	
NS	500657	SCREW TC TR PH #10-24x1/2 Z050		AR	AR	AR	
50	**Y2-2245-10**	**A/C COMPRESSOR SMALL - INSTALLATION**					
		H) TO FIX BY PASS TO HIGH PRESSURE SIDE					
		L) TO FIX BY PASS TO LOW PRESSURE SIDE					
		S) SERVICE					
		P) CALL ORDER DESK FOR SPECIFIC APPLICATION (V.I.N.)					

From Y-7046 To 3-8164		Date:07/2024	PAGE:IS14130
RETROFIT KIT FOR OBSOLETED CONDENSORS 950018 & 950335			

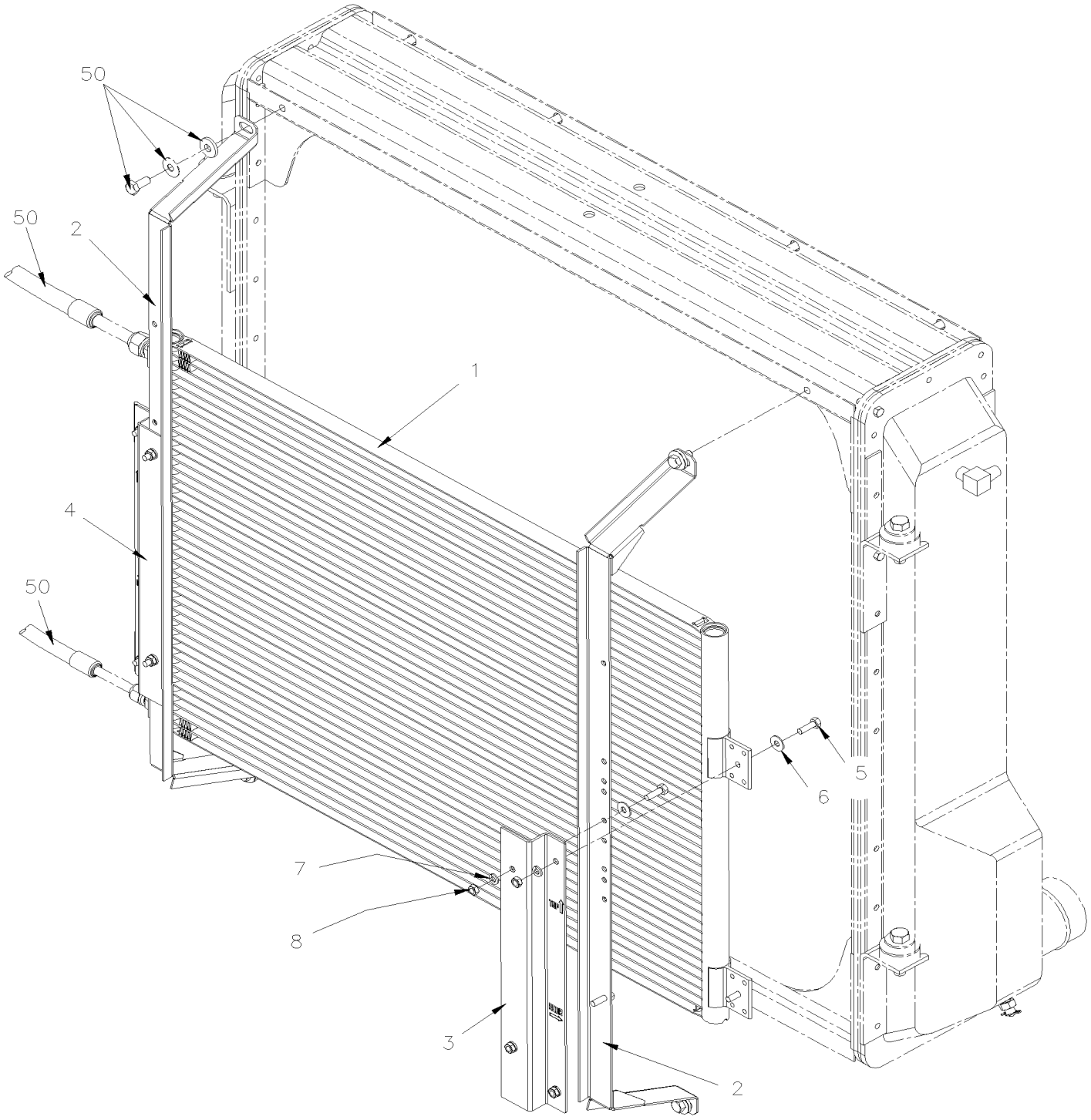

From Y-7046 To 3-8164		Date:07/2024	PAGE:IS14130

RETROFIT KIT FOR OBSOLETED CONDENSORS 950018 & 950335

Item#	Part	Description	XLII 45	XLII MTH40	XLII MTH45	XLII MTH45E	NOTES
1	950958	CONDENSOR COIL E-COAT 8.2	1	1	1	1	
2	052382	SUPPORT	2	2	2	2	
3	053697	SUPPORT / REAR	1	1	1	1	
4	053698	SUPPORT / FRONT	1	1	1	1	
5	502622	SCREW CAP HEX M6-1.0x20 SS BK	8	8	8	8	
6	500411	WASHER FL .260x.697x.050 SS	8	8	8	8	
7	502570	WASHER LO SPT 6.1x11.8x1.6 SS	8	8	8	8	
8	502565	NUT HEX M6-1.0 SS	8	8	8	8	
10	IS-14130	SEE INSTRUCTION SHEET	1	1	1	1	
10	FI-14130	VOIR FEUILLE D'INSTRUCTION	1	1	1	1	

From 4-8165 To 8-9339		Date:07/2024	PAGE:Y2-2222-51
SMALL A/C LINES & HOSES WITH DETROIT S-60 & R134A			

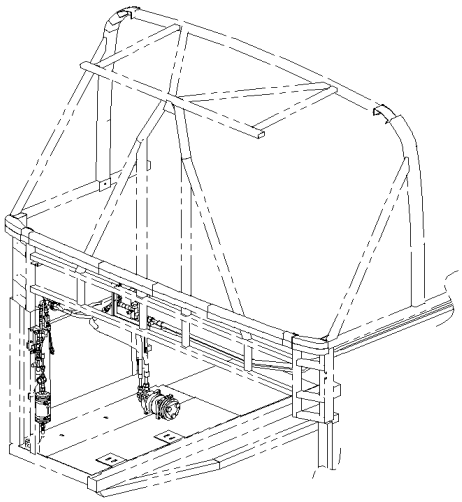

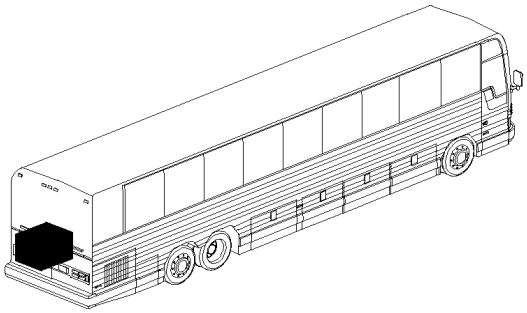

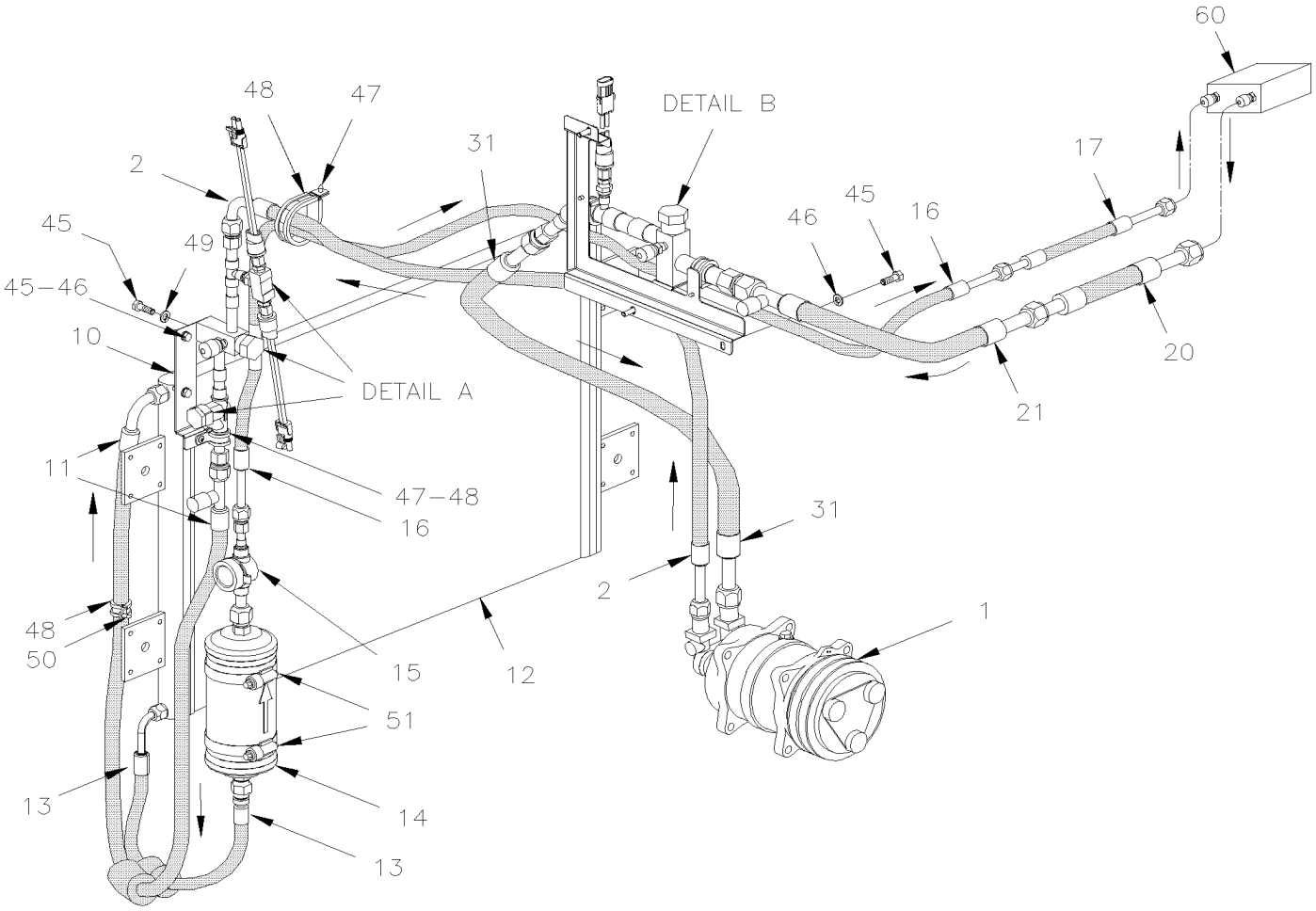

From 4-8165 To 8-9339		Date:07/2024	PAGE:Y2-2222-51
SMALL A/C LINES & HOSES WITH DETROIT S-60 & R134A			

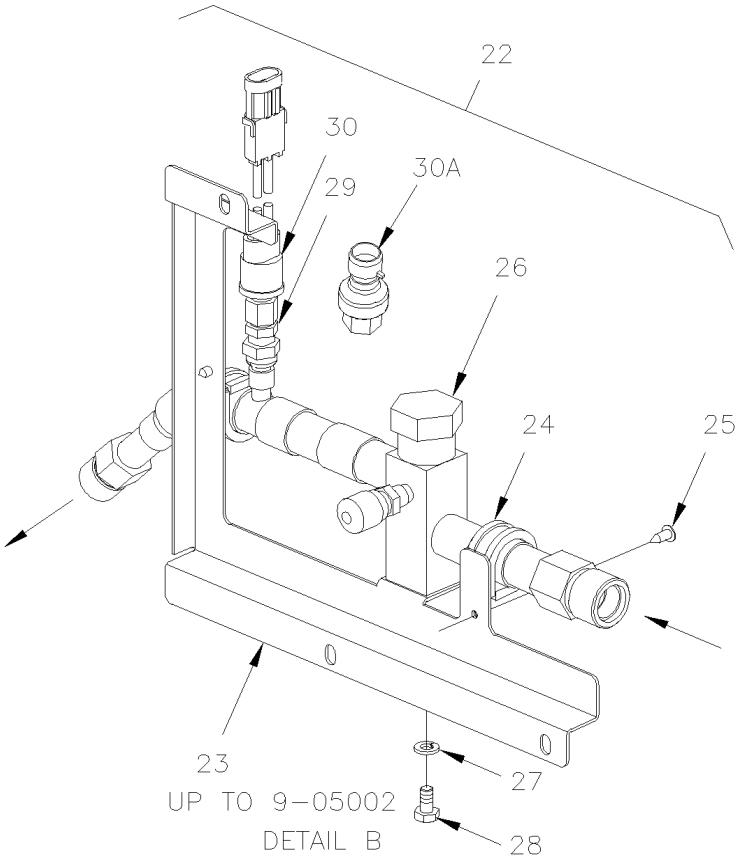

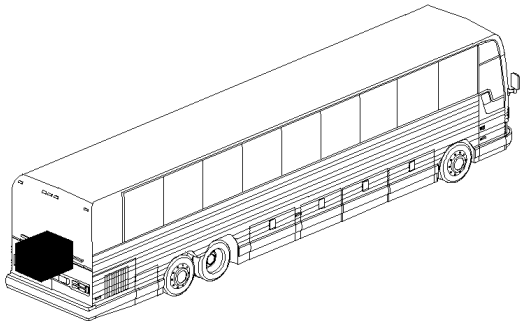

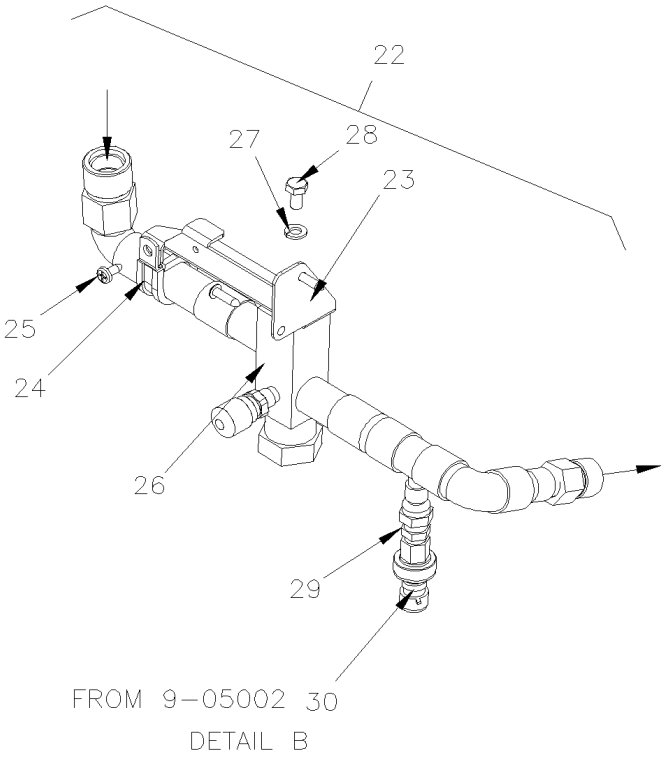

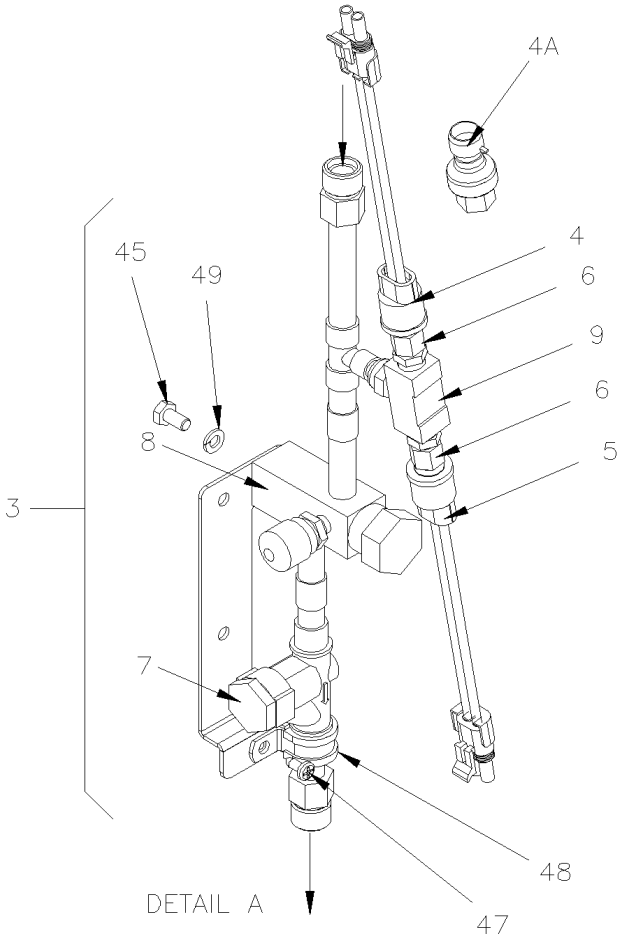

From 4-8165 To 8-9339		Date:07/2024	PAGE:Y2-2222-51

SMALL A/C LINES & HOSES WITH DETROIT S-60 & R134A

Item#	Part	Description	XLII 45	XLII MTH40	XLII MTH45	XLII MTH45E	NOTES
1	**Y2-2245-11**	**A/C COMPRESSOR SMALL - INSTALLATION**					
2	454067	HOSE ASSY / #8 960MM To 7-9095		1		1	C
. NS	507343	. O-RING / ORS FITTING / #8 NEO To 7-9095		2		2	C
2	455276	HOSE ASSY / #8 960MM To 7-9095		1		1	C S
. NS	507343	. O-RING / ORS FITTING / #8 NEO To 7-9095		2		2	C S
2	454353	HOSE ASSY / #8 2482MM From 7-9096				1	
. NS	507343	. O-RING / ORS FITTING / #8 NEO From 7-9096				2	
2	455302	HOSE ASSY / #8 2482MM From 7-9096				1	S
. NS	507343	. O-RING / ORS FITTING / #8 NEO From 7-9096				2	S
2	454098	HOSE ASSY / #8 875MM To 7-9095			1		
. NS	507343	. O-RING / ORS FITTING / #8 NEO To 7-9095			2		
2	455288	HOSE ASSY / #8 875MM To 7-9095			1		S
. NS	507343	. O-RING / ORS FITTING / #8 NEO To 7-9095			2		S
2	453899	HOSE ASSY / #8 1257MM To 3-8164			1		A
. NS	507343	. O-RING / ORS FITTING / #8 NEO To 3-8164			2		A
2	455272	HOSE ASSY / #8 1257MM To 3-8164			1		A S
. NS	507343	. O-RING / ORS FITTING / #8 NEO To 3-8164			2		A S
3	454066	VALVE ASSY / HI-SIDE		1	1	1	
4	454084	. PRESSURE SWITCH N.O. 195-150 20PS001MA195K150K To 7-9095		1	1	1	
4A	563423	. TRANSDUSER -6.7 to 420 LBS / 1/8 NPT-F From 7-9096			1	1	
. NS	563159	. . CONNECTOR / METRI-PACK 150 / SH 3C / PED 12065287 From 7-9096			1	1	
5	453380	. PRESSURE SWITCH N.C. 350-245 20PS001MB350K245R		1	1	1	
6	950249	. SCHRADER VALVE 1/4NPT-M		2	2	2	
7	950326	. CHECK VALVE		1	1	1	
8	950376	. VALVE SERVICE HIGH PRESSURE		1	1	1	
9	501894	. MALE BRANCHE TEE / PIPE FITTING / 1/4NPT-Fx1/4NPT-Fx1/4NPT-M BR		1	1	1	
10	454072	SUPPORT / HIGHT PRESSURE VALVE		1	1	1	
11	454070	HOSE ASSY / #8 1325MM		1		1	
. NS	507343	. O-RING / ORS FITTING / #8 NEO		2		2	
11	455278	HOSE ASSY / #8 1325MM		1		1	S
. NS	507343	. O-RING / ORS FITTING / #8 NEO		2		2	S
11	454074	HOSE ASSY / #8 1175MM			1		
. NS	507343	. O-RING / ORS FITTING / #8 NEO			2		
11	455280	HOSE ASSY / #8 1175MM			1		S
. NS	507343	. O-RING / ORS FITTING / #8 NEO			2		S
11	453900	HOSE ASSY / #8 685MM To 3-8164			1		A
. NS	507343	. O-RING / ORS FITTING / #8 NEO To 3-8164			2		A
11	455273	HOSE ASSY / #8 685MM To 3-8164			1		A S
. NS	507343	. O-RING / ORS FITTING / #8 NEO To 3-8164			2		A S
11	454142	HOSE ASSY / #8 1215MM To 3-8164		1		1	B
. NS	507343	. O-RING / ORS FITTING / #8 NEO To 3-8164		2		2	B
11	455291	HOSE ASSY / #8 1215MM To 3-8164		1		1	B S

From 4-8165 To 8-9339		Date:07/2024	PAGE:Y2-2222-51

SMALL A/C LINES & HOSES WITH DETROIT S-60 & R134A

Item#	Part	Description	XLII 45	XLII MTH40	XLII MTH45	XLII MTH45E	NOTES
. NS	507343	. O-RING / ORS FITTING / #8 NEO To 3-8164		2		2	B S
11	453643	HOSE ASSY / #8 2220MM From 4-7937 To 4-7937			1		
. NS	507343	. O-RING / ORS FITTING / #8 NEO From 4-7937 To 4-7937			2		
11	455262	HOSE ASSY / #8 2220MM From 4-7937 To 4-7937			1		S
. NS	507343	. O-RING / ORS FITTING / #8 NEO From 4-7937 To 4-7937			2		S
12	**Y2-2255-11**	**CONDENSOR - INSTALLATION SMALL A/C SYSTEM**					
13	454069	HOSE ASSY / #6 515MM		1		1	
. NS	507278	. O-RING / ORS FITTING / #4 NEO		1		1	
13	454077	HOSE ASSY / #6 475MM			1		
. NS	507278	. O-RING / ORS FITTING / #4 NEO			2		
13	453901	HOSE ASSY / #6 1257MM To 3-8164			1		A
. NS	507278	. O-RING / ORS FITTING / #4 NEO To 3-8164			1		A
13	454141	HOSE ASSY / #6 375MM To 3-8164		1		1	B
13	453642	HOSE ASSY / #6 600MM From 4-7937 To 4-7937			1		
. NS	507278	. O-RING / ORS FITTING / #4 NEO From 4-7937 To 4-7937			2		
14	950370	FILTER DRYER		1	1	1	
. NS	507085	. O-RING 7/16" I.D X 1/32"		1	1	1	
15	453514	MOISTURE INDICATOR ASSY		1	1	1	
. NS	950379	. MOISTURE INDICATOR		1	1	1	
15	950379	. MOISTURE INDICATOR		1	1	1	
15	950029	. CAP, MOISTURE INDICATOR		1	1	1	
16	454075	HOSE ASSY / #6 2690MM		1	1	1	
. NS	507278	. O-RING / ORS FITTING / #4 NEO		2	2	2	
16	455281	HOSE ASSY / #6 2690MM		1	1	1	S
. NS	507278	. O-RING / ORS FITTING / #4 NEO		2	2	2	S
16	453641	HOSE ASSY / #6 3000MM From 4-7937 To 4-7937			1		
. NS	507278	. O-RING / ORS FITTING / #4 NEO From 4-7937 To 4-7937			2		
16	455261	HOSE ASSY / #6 3000MM From 4-7937 To 4-7937			1		S
. NS	507278	. O-RING / ORS FITTING / #4 NEO From 4-7937 To 4-7937			2		S
17	453319	PIPE ASSY		1	1	1	
20	Call order desk	PIPE ASSY		1			P
20	Call order desk	PIPE ASSY			1		P
20	Call order desk	PIPE ASSY				1	P
21	454097	HOSE ASSY / #12 1895MM To 7-9095		1		1	C
. NS	507280	. O-RING / ORS FITTING / #12 NEO To 7-9095		2		2	C
21	455287	HOSE ASSY / #12 1895MM To 7-9095		1		1	C S
. NS	507280	. O-RING / ORS FITTING / #12 NEO To 7-9095		2		2	C S
21	454351	HOSE ASSY / #12 847MM From 7-9096		1		1	
. NS	507280	. O-RING / ORS FITTING / #12 NEO From 7-9096		2		2	
21	455300	HOSE ASSY / #12 847MM From 7-9096		1		1	S
. NS	507280	. O-RING / ORS FITTING / #12 NEO From 7-9096		2		2	S
. NS	505110	. COIL PROTECTOR / PLASTIC / #12 From 7-9096		AR		AR	S

From 4-8165 To 8-9339		Date:07/2024	PAGE:Y2-2222-51

SMALL A/C LINES & HOSES WITH DETROIT S-60 & R134A

Item#	Part	Description	XLII 45	XLII MTH40	XLII MTH45	XLII MTH45E	NOTES
21	454097	HOSE ASSY / #12 1895MM			1		C
. NS	507280	. O-RING / ORS FITTING / #12 NEO			2		C
21	455287	HOSE ASSY / #12 1895MM			1		C S
. NS	507280	. O-RING / ORS FITTING / #12 NEO			2		C S
21	453470	HOSE ASSY / #12 1725MM From 4-7937 To 4-7937			1		
. NS	507344	. O-RING / ORS FITTING / #10 NEO From 4-7937 To 4-7937			2		
21	455241	HOSE ASSY / #12 1725MM From 4-7937 To 4-7937			1		S
. NS	507344	. O-RING / ORS FITTING / #10 NEO From 4-7937 To 4-7937			2		S
22	454061	VALVE ASSY W/SUPPORT / LOW SIDE		1	1	1	
22	455143	VALVE ASSY W/SUPPORT / LOW SIDE From 7-9096			1		
22	Call order desk	VALVE ASSY W/SUPPORT / LOW SIDE From 7-9096				1	P
23	454063	. SUPPORT / LOW PRESSURE VALVE		1	1	1	
23	454354	. SUPPORT / LOW PRESSURE VALVE From 7-9096				1	
24	952635	. CLAMP / 1" I.D.		1	1	1	
25	509805	. SCREW TP PAN PH #10x1/2 BK		1	1	1	
26	950377	. VALVE SERVICE LOW PRESSURE To 7-9109		1	1	1	
26	950950	. VALVE SERVICE LOW PRESSURE		1	1	1	
. NS	950235	. . GAUGE ADAPTOR ASSY / W/BLUE CAP FOR R-134A / SUCTION SIDE (ALUMINUM)		1	1	1	
27	955920	. WASHER LO SPT 6.5x11.5x1.6 ZP		1	1	1	
28	502772	. SCREW CAP HEX 1/4-20x1/2 G5 N500		1	1	1	
29	950249	. SCHRADER VALVE 1/4NPT-M		1	1	1	
30	452831	. PRESSURE SWITCH N.O. 30-5 20SP001MA030C005C To 7-9095		1	1	1	
30A	563423	. TRANSDUSER -6.7 to 420 LBS / 1/8 NPT-F From 7-9096			1	1	
. NS	563159	. . CONNECTOR / METRI-PACK 150 / SH 3C / PED 12065287 From 7-9096			1	1	
31	454071	HOSE ASSY / #12 780MM To 7-9095		1	1	1	C
. NS	507344	. O-RING / ORS FITTING / #10 NEO To 7-9095		2	2	2	C
31	455279	HOSE ASSY / #12 780MM To 7-9095		1	1	1	C S
. NS	507344	. O-RING / ORS FITTING / #10 NEO To 7-9095		2	2	2	C S
31	454352	HOSE ASSY / #12 475MM From 7-9096				1	
. NS	507344	. O-RING / ORS FITTING / #10 NEO From 7-9096				2	
31	455301	HOSE ASSY / #12 475MM From 7-9096				1	S
. NS	507344	. O-RING / ORS FITTING / #10 NEO From 7-9096				2	S
31	453898	HOSE ASSY / #10 890MM To 3-8164			1		A
. NS	507344	. O-RING / ORS FITTING / #10 NEO To 3-8164			2		A
31	455271	HOSE ASSY / #10 890MM To 3-8164			1		A S
. NS	507344	. O-RING / ORS FITTING / #10 NEO To 3-8164			2		A S
40	504586	WASHER FL SPACER .450x.625x.875 NYL		1	1	1	
41	504637	CABLE TIE / 3/16" x 13"		AR	AR	AR	
42	504458	CLAMP / 1 5/8" I.D.		AR	AR	AR	
43	500642	SCREW TP PAN PH #10x3/4 Z050		AR	AR	AR	
45	955920	WASHER LO SPT 6.5x11.5x1.6 ZP		AR	AR	AR	
46	502830	SCREW CAP HEX M6-1.0x20 G8.8 N500		AR	AR	AR	

From 4-8165 To 8-9339		Date:07/2024	PAGE:Y2-2222-51

SMALL A/C LINES & HOSES WITH DETROIT S-60 & R134A

Item#	Part	Description	XLII 45	XLII MTH40	XLII MTH45	XLII MTH45E	NOTES
47	952629	CLAMP / 5/8" I.D.		AR	AR	AR	
48	509805	SCREW TP PAN PH #10x1/2 BK		3	3	3	
49	502772	SCREW CAP HEX 1/4-20x1/2 G5 N500		1	1	1	
50	952629	CLAMP / 5/8" I.D.		1	1	1	
51	504026	HOSE CLAMP / 2"13/16-3"3/4 SS / HS-52		1	1	1	
60	**Y2-2240-20**	**BLOWER VENTILATION - PARCEL RACK**					
NS	454222	KIT, RETROFIT "SELTEC" COMPRESSOR / W/MTH 40' To 3-8164		1			
. NS	IS-04009	. SEE INSTRUCTION SHEET To 3-8164		1			
NS	454223	KIT, RETROFIT "SELTEC" COMPRESSOR / W/MTH 45' To 3-8164				1	
. NS	IS-04009	. SEE INSTRUCTION SHEET To 3-8164				1	
NS	453897	KIT, RETROFIT "SELTEC" COMPRESSOR /W/W5 ONLY To 3-8164			1		
. NS	IS-03152	. SEE INSTRUCTION SHEET To 3-8164			1		
		A) USE ONLY WITH RETROFIT KIT #453897					
		B) USE ONLY WITH RETROFIT KIT #454222 & #454223					
		C) USE ALSO WITH RETROFIT KIT #454222 & #454223					
		S) SERVICE					
		P) CALL ORDER DESK FOR SPECIFIC APPLICATION (V.I.N.)					

From Y-7046 To 5-8469		Date:07/2024	PAGE:Y2-2225-00
DRIVER'S HEATER & DEFROSTER ASSY			

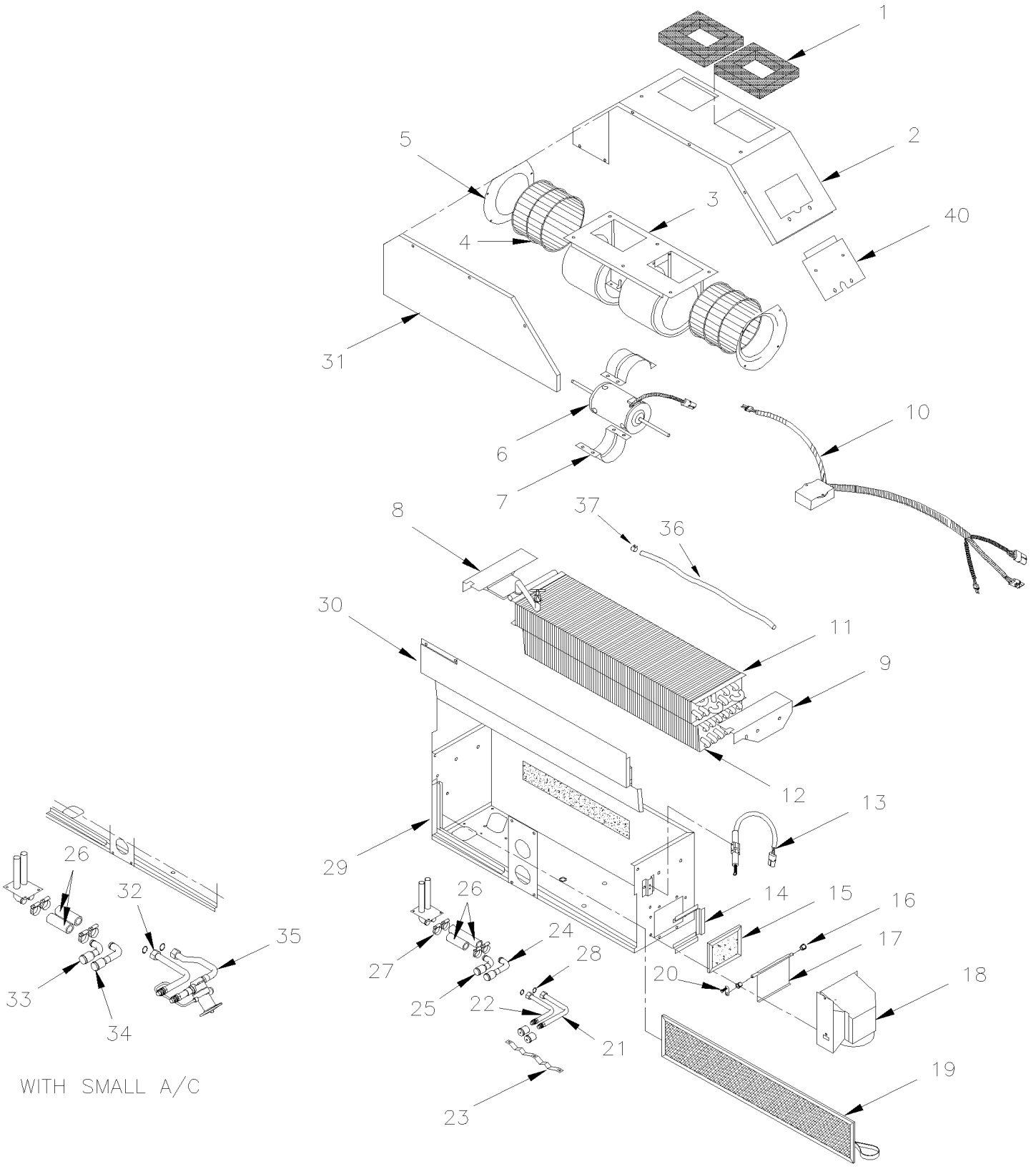

From Y-7046 To 5-8469		Date:07/2024	PAGE:Y2-2225-00

DRIVER'S HEATER & DEFROSTER ASSY

Item#	Part	Description	XLII 45	XLII MTH40	XLII MTH45	XLII MTH45E	NOTES
	871182	DEFROSTER & A/C UNIT ASSY To 3-8108	1				
	871325	DEFROSTER & A/C UNIT ASSY From 3-8109	1				
	871178	DEFROSTER & A/C UNIT ASSY		1	1	1	
	871339	DEFROSTER & A/C UNIT ASSY From 4-8165		1	1	1	A
1	871129	. SEAL	1	1	1	1	
2	871223	. COVER	1	1	1	1	
3	871131	. BLOWER ASSY 24V / W/SINGLE MOTOR MOUNT / WITH CONNECTOR	1	1	1	1	C
3	N8893462	. BLOWER ASSY 24V / W/SINGLE MOTOR MOUNT / WITH CONNECTOR	1	1	1	1	
3	871132	. . BLOWER HOUSING	1	1	1	1	
4	871133	. . BLOWER WHEEL / PLASTIC 5 1/8" x 3 1/2" x 5/16" x I.D.	2	2	2	2	
NS	N8888160	. . SPRING CLIP	2	2	2	2	
5	871134	. . VENTURI	2	2	2	2	
6	871135	. . MOTOR ASSY / 24V	1	1	1	1	
6	N8893990	. . MOTOR ASSY / 24V / WITH CONNECTOR	1	1	1	1	
7	871136	. . MOTOR MOUNTING	2	2	2	2	
8	871137	. BRACKET L.H.	1	1	1	1	
9	871138	. BRACKET R.H.	1	1	1	1	
10	871139	. MODULE CONTROL FAN SPEED /W/SINGLE MOTOR / (STAMPED 35-0060)	1	1	1	1	
10	**IS19923**	**. HVAC MODULE REPLACEMENT**	1	1	1	1	
11	871140	. HEATER COIL	1	1	1	1	
. NS	870127	. . DRAIN VALVE ROBINET VIDANGE	1	1	1	1	
12	871141	. EVAPORATOR COIL	1	1	1	1	
13	871142	. ACTUATOR, THERMAL	1	1	1	1	
14	871143	. CHANNEL, FILTER F/A	1	1	1	1	
15	871144	. FILTER / FRESH AIR 1/4" x 3 5/8" x 5 1/4"	1	1	1	1	
16	871025	. BUSHING / CABLE PIVOT	2	2	2	2	
17	871145	. DAMPER TRAP	1	1	1	1	
18	871224	. BOX, FRESH AIR To 3-8108	1				
18	871225	. BOX, FRESH AIR From 3-8109	1				
18	871225	. BOX, FRESH AIR		1	1	1	
19	871147	. FILTER / RECIRCULATING 1/4" x 6 1/4" x 28"	1	1	1	1	
20	871148	. LEVER , F/A DAMPER	1	1	1	1	
20	5001410	. SCREW MA CHE PH M4-0.7x16 SS	1	1	1	1	
20	502557	. NUT HEX NYRT M4-0.7 SS	1	1	1	1	
21	871229	. TUBE, A/C		1	1	1	
21	871233	. TUBE, A/C	1				
22	871228	. TUBE, A/C		1	1	1	
22	871232	. TUBE, A/C	1				
23	871226	. TUBE SUPPORT	1	1	1	1	
NS	871238	. TUBE SUPPORT	2				
NS	871237	. TUBE SUPPORT	1	1	1	1	
24	871231	. TUBE HEATER		1	1	1	

From Y-7046 To 5-8469		Date:07/2024	PAGE:Y2-2225-00

DRIVER'S HEATER & DEFROSTER ASSY

Item#	Part	Description	XLII 45	XLII MTH40	XLII MTH45	XLII MTH45E	NOTES
24	871235	. TUBE HEATER	1				
25	871230	. TUBE HEATER		1	1	1	
25	871234	. TUBE HEATER	1				
26	503007	. HOSE 2 PLY / RADIATOR HOSE / 5/8" I.D. / S.L.	AR	AR	AR	AR	
27	504646	. HOSE CLAMP / 11/16"-1"1/4 / C.T. 9412	4	4	4	4	
28	507279	. O-RING / ORS FITTING / #8 NEO	2	2	2	2	
28	**Y2-2208-00**	**. A/C EXPANSION VALVE**					
29	N.P.N.	. CASING	1	1	1	1	4
30	871155	. COVER	1	1	1	1	
31	871156	. COVER / BLOWER ACCESS	1	1	1	1	
NS	5001047	. . SCREW TC PAN PH M5-0.8X10 ZP	17	17	17	17	
32	871343	. TUBE A/C From 4-8165		1	1	1	A B
33	871230	. TUBE HEATER From 4-8165		1	1	1	A
34	871231	. TUBE HEATER From 4-8165		1	1	1	A
35	871344	. VALVE, EXPANSION ASSY / WITH PIPE From 4-8165		1	1	1	A B
36	8860148	. TUBE, NYLON 5/16 O.D. / BLACK S.L.	AR	AR	AR	AR	
37	N8888160	. SPRING CLIP	1	1	1	1	
40	871227	. HARNESS COVER	1	1	1	1	
		A) WITH SMALL A/C SYSTEM AND "SELTEC" COMPRESSOR					
		B) USE ALSO WITH KIT #453897 |					
		C) FOR PRODUCT IMPROVMENT, ASK #871359 AS SHOWN AT PAGE Y2-2225-01					
		4) NO PARTS NUMBER					

From Y-7046 To 5-8469		Date:07/2024	PAGE:IS19923
HVAC MODULE REPLACEMENT			

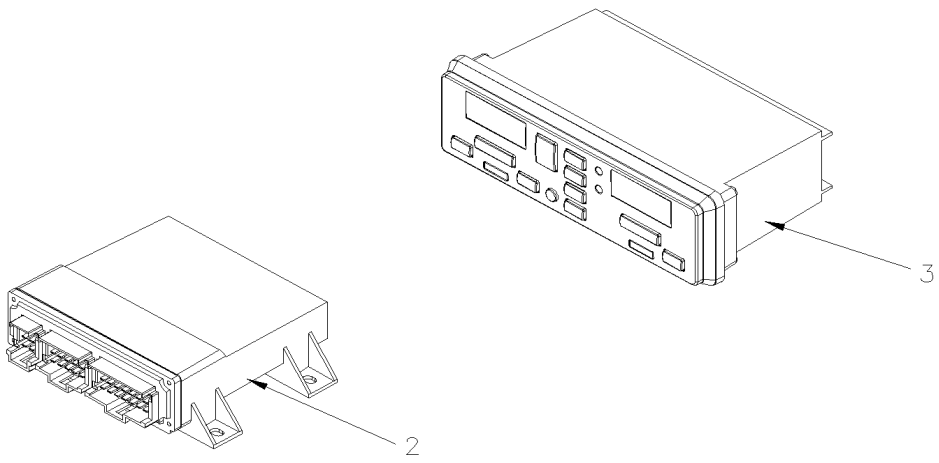

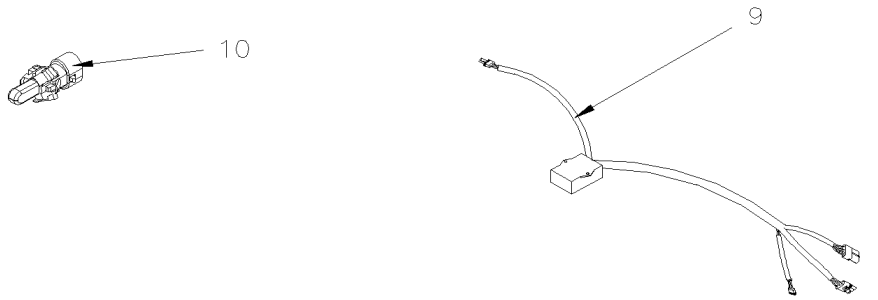

From Y-7046 To 5-8469		Date:07/2024	PAGE:IS19923

HVAC MODULE REPLACEMENT

Item#	Part	Description	XLII 45	XLII MTH40	XLII MTH45	XLII MTH45E	NOTES
NS	23499009-FAC	PROGRAMMED MCM # HVAC MODULE	1	1	1	1	
2	22722846	I/O A E-MODULE VOLVO MULTIPLEX	1	1	1	1	
3	870008	A/C CONTROL MODULE	1	1	1	1	
NS	0600035	HVAC INTERFACE HARNESS WITH HVAC	1	1	1	1	
NS	0600036	OUTSIDE TEMPERATURE SENSOR HARNESS	1	1	1	1	
NS	0600037	DUAL TO SINGLE MOTOR WIRING ADAPTOR	1	1	1	1	
NS	0600038	SINGLE MOTOR DRIVE HARNESS	1	1	1	1	
NS	0600039	DUAL MOTOR DRIVE HARNESS	1	1	1	1	
9	871353	MODULE CONTROL FAN SPEED / W/DOUBLE MOTOR	1	1	1	1	
10	563335	SENSOR THERMISTOR ASSY / OUTSIDE / / PED 15416387	1	1	1	1	
NS	563332	RELAY 24V S.P.D.T. W/RESISTOR / "VOLVO" (20374662)	2	2	2	2	
NS	504637	CABLE TIE / 3/16" x 13"	15	15	15	15	
NS	5001374	SCREW CAP HEX M5-0.8x10 SS	3	3	3	3	
NS	5001449	NUT HEX M5-0.8 SS	3	3	3	3	
NS	5001480	NUT HEX NYRT #8-32 SS	1	1	1	1	
NS	IS-19923	SEE INSTRUCTION SHEET	1	1	1	1	

From 5-8470 To 7-9095		Date:07/2024	PAGE:Y2-2225-01
DRIVER'S HEATER & DEFROSTER ASSY			

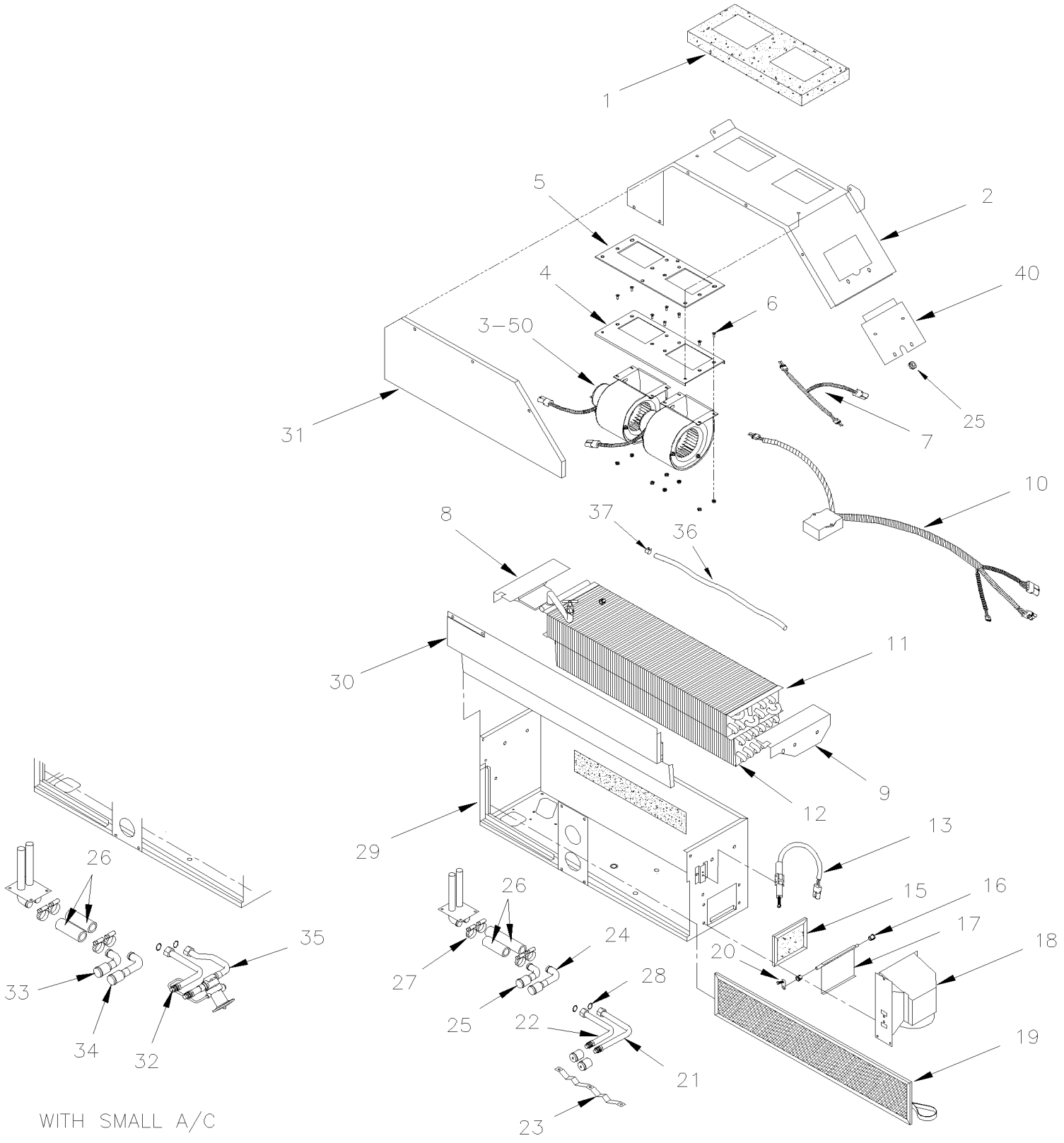

From 5-8470 To 7-9095		Date:07/2024	PAGE:Y2-2225-01

DRIVER'S HEATER & DEFROSTER ASSY

Item#	Part	Description	XLII 45	XLII MTH40	XLII MTH45	XLII MTH45E	NOTES
	871357	DEFROSTER & A/C UNIT ASSY To 6-8906	1				
	871356	DEFROSTER & A/C UNIT ASSY		1	1	1	
	871358	DEFROSTER & A/C UNIT ASSY		1	1	1	A
1	871129	. SEAL	1	1	1	1	
2	871223	. COVER	1	1	1	1	
3	871359	. BLOWER ASSY 24V / W/DOUBLE MOTOR MOUNT	2	2	2	2	
3	**871360**	**. . BLOWER & MOTOR ASSY - "M.C.C." "CCW" / FAN END**	2	2	2	2	
4	871362	. . PLATE MOUNTING	1	1	1	1	
5	871363	. . SEAL PLATE MOUNTING	1	1	1	1	
6	684605	. . SCREW CAP HEXS #10-32x1/2	8	8	8	8	
NS	500423	. . NUT HEX NYRT #10-32 SS	8	8	8	8	
7	871364	. . CABLE HARNESS	1	1	1	1	
8	871137	. BRACKET L.H.	1	1	1	1	
9	871138	. BRACKET R.H.	1	1	1	1	
10	871380	. MODULE CONTROL FAN SPEED / W/DOUBLE MOTOR (STAMPED 35-0520)	1	1	1	1	
10	**IS19923**	**. HVAC MODULE REPLACEMENT To 7-9095**	1	1	1	1	
11	871140	. HEATER COIL	1	1	1	1	
. NS	870127	. . DRAIN VALVE ROBINET VIDANGE	1	1	1	1	
12	871141	. EVAPORATOR COIL	1	1	1	1	
13	871142	. ACTUATOR, THERMAL	1	1	1	1	
15	871144	. FILTER / FRESH AIR 1/4" x 3 5/8" x 5 1/4"	1	1	1	1	
16	871025	. BUSHING / CABLE PIVOT	2	2	2	2	
17	871145	. DAMPER TRAP	1	1	1	1	
18	871225	. BOX, FRESH AIR	1	1	1	1	
19	871147	. FILTER / RECIRCULATING 1/4" x 6 1/4" x 28"	1	1	1	1	
20	871148	. LEVER , F/A DAMPER	1	1	1	1	
20	5001410	. SCREW MA CHE PH M4-0.7x16 SS	1	1	1	1	
20	502557	. NUT HEX NYRT M4-0.7 SS	1	1	1	1	
21	871229	. TUBE, A/C		1	1	1	
21	871233	. TUBE, A/C To 6-8906	1				
22	871228	. TUBE, A/C		1	1	1	
22	871232	. TUBE, A/C To 6-8906	1				
23	871226	. TUBE SUPPORT		1	1	1	
NS	871238	. TUBE SUPPORT To 6-8906	2				
NS	871237	. TUBE SUPPORT To 6-8906	1				
24	871231	. TUBE HEATER To 6-8906	1				
24	871235	. TUBE HEATER To 6-8906	1				
25	871230	. TUBE HEATER		1	1	1	
25	871234	. TUBE HEATER To 6-8906	1				
26	503007	. HOSE 2 PLY / RADIATOR HOSE / 5/8" I.D. / S.L.	AR	AR	AR	AR	
27	504646	. HOSE CLAMP / 11/16"-1"1/4 / C.T. 9412	4	4	4	4	
28	507279	. O-RING / ORS FITTING / #8 NEO	2	2	2	2	

From 5-8470 To 7-9095		Date:07/2024	PAGE:Y2-2225-01

DRIVER'S HEATER & DEFROSTER ASSY

Item#	Part	Description	XLII 45	XLII MTH40	XLII MTH45	XLII MTH45E	NOTES
28	**Y2-2208-00**	**. A/C EXPANSION VALVE**					
29	N.P.N.	. CASING	1	1	1	1	4
30	871155	. COVER	1	1	1	1	
31	871156	. COVER / BLOWER ACCESS	1	1	1	1	
NS	5001047	. . SCREW TC PAN PH M5-0.8X10 ZP	17	17	17	17	
32	871343	. TUBE A/C		1	1	1	A
33	871230	. TUBE HEATER		1	1	1	A
34	871231	. TUBE HEATER		1	1	1	A
35	871344	. VALVE, EXPANSION ASSY / WITH PIPE		1	1	1	A
36	8860148	. TUBE, NYLON 5/16 O.D. / BLACK S.L.	1	1	1	1	
37	N8888160	. SPRING CLIP	1	1	1	1	
40	871227	. HARNESS COVER	1	1	1	1	
		A) WITH SMALL A/C SYSTEM					
		4) NO PARTS NUMBER					

From 5-8470 To 7-9095		Date:07/2024	PAGE:871360
BLOWER & MOTOR ASSY - "M.C.C." "CCW" / FAN END			

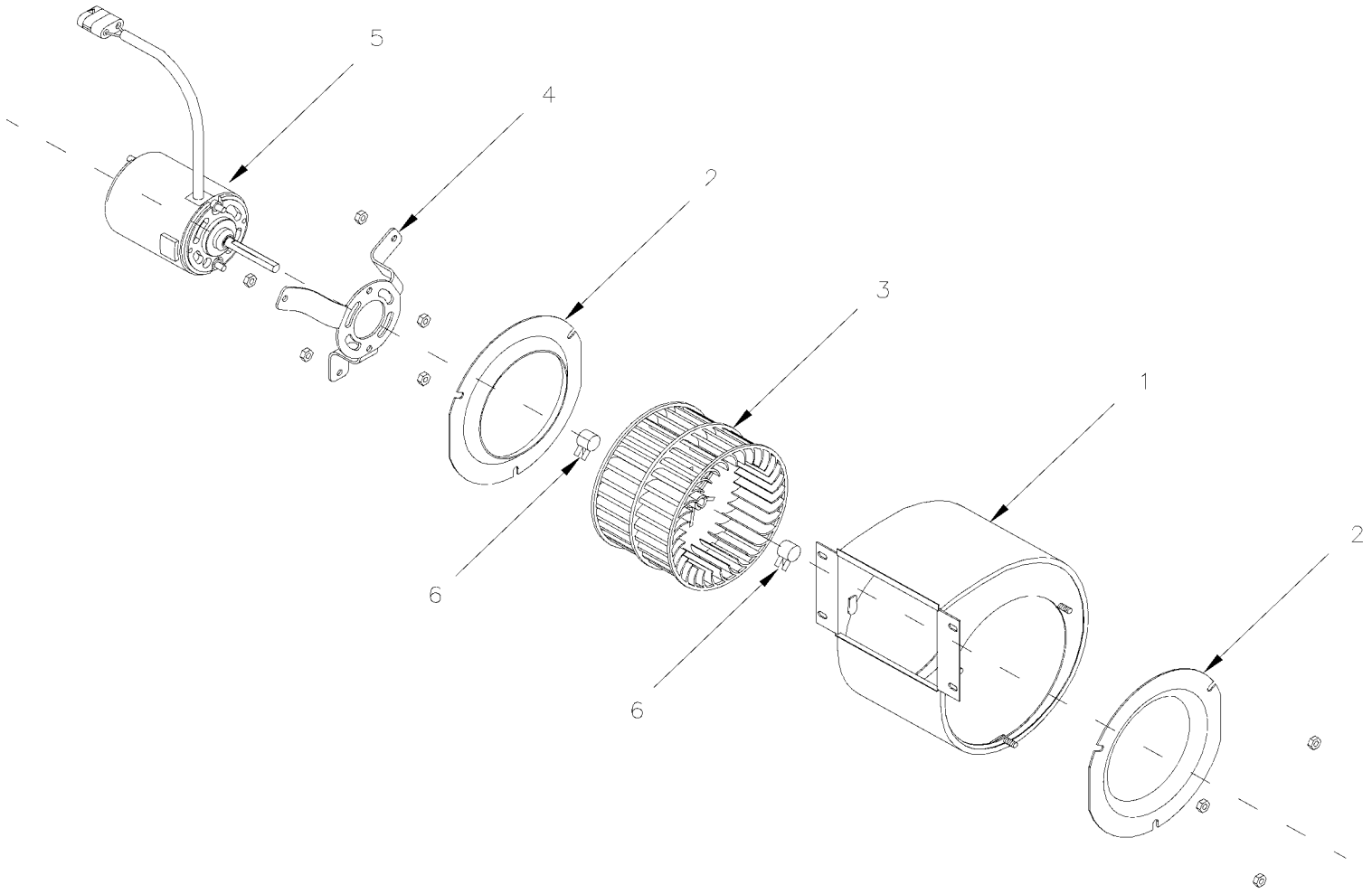

From 5-8470 To 7-9095		Date:07/2024	PAGE:871360

BLOWER & MOTOR ASSY - "M.C.C." "CCW" / FAN END

Item#	Part	Description	XLII 45	XLII MTH40	XLII MTH45	XLII MTH45E	NOTES
		BLOWER ASSY 24V / CCW	1	1	1	1	
1	871365	. BLOWER HOUSING	1	1	1	1	
2	N8889479	. VENTURY	2	2	2	2	
3	871133	. BLOWER WHEEL / PLASTIC 5 1/8" x 3 1/2" x 5/16" x I.D.	1	1	1	1	
4	N8890530	. MOUNTING MOTOR BRACKET	1	1	1	1	
5	871366	. MOTOR ASSY 24V / CCW	1	1	1	1	
6	N8888160	. SPRING CLIP	2	2	2	2	

To 7-9095		Date:07/2024	PAGE:IS19923
HVAC MODULE REPLACEMENT			

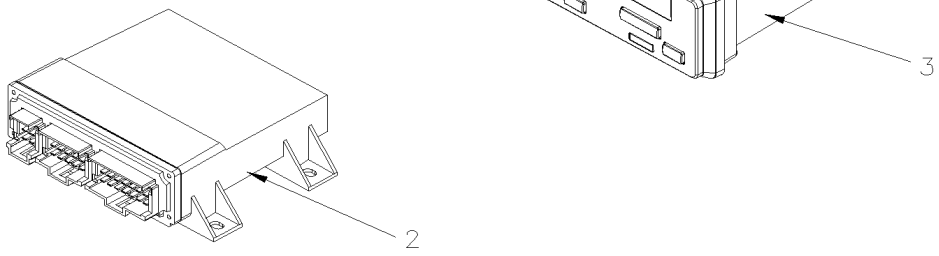

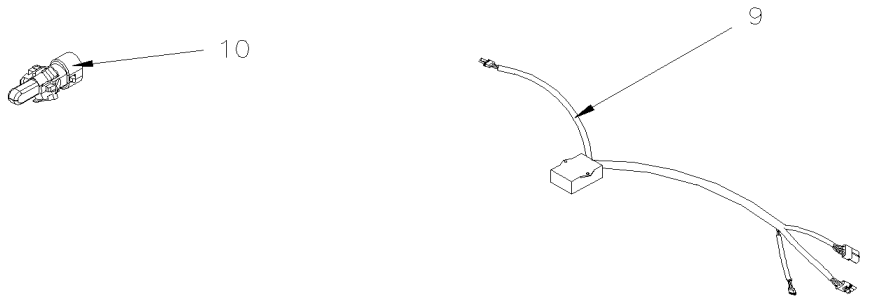

To 7-9095		Date:07/2024	PAGE:IS19923

HVAC MODULE REPLACEMENT

Item#	Part	Description	XLII 45	XLII MTH40	XLII MTH45	XLII MTH45E	NOTES
NS	23499009-FAC	PROGRAMMED MCM # HVAC MODULE	1	1	1	1	
2	22722846	I/O A E-MODULE VOLVO MULTIPLEX	1	1	1	1	
3	870008	A/C CONTROL MODULE	1	1	1	1	
NS	0600035	HVAC INTERFACE HARNESS WITH HVAC	1	1	1	1	
NS	0600036	OUTSIDE TEMPERATURE SENSOR HARNESS	1	1	1	1	
NS	0600037	DUAL TO SINGLE MOTOR WIRING ADAPTOR	1	1	1	1	
NS	0600038	SINGLE MOTOR DRIVE HARNESS	1	1	1	1	
NS	0600039	DUAL MOTOR DRIVE HARNESS	1	1	1	1	
9	871353	MODULE CONTROL FAN SPEED / W/DOUBLE MOTOR	1	1	1	1	
10	563335	SENSOR THERMISTOR ASSY / OUTSIDE / / PED 15416387	1	1	1	1	
NS	563332	RELAY 24V S.P.D.T. W/RESISTOR / "VOLVO" (20374662)	2	2	2	2	
NS	504637	CABLE TIE / 3/16" x 13"	15	15	15	15	
NS	5001374	SCREW CAP HEX M5-0.8x10 SS	3	3	3	3	
NS	5001449	NUT HEX M5-0.8 SS	3	3	3	3	
NS	5001480	NUT HEX NYRT #8-32 SS	1	1	1	1	
NS	IS-19923	SEE INSTRUCTION SHEET	1	1	1	1	

From 7-9096 To 8-9339		Date:07/2024	PAGE:Y2-2225-02
DRIVER'S HEATER & DEFROSTER ASSY WITH MUX			

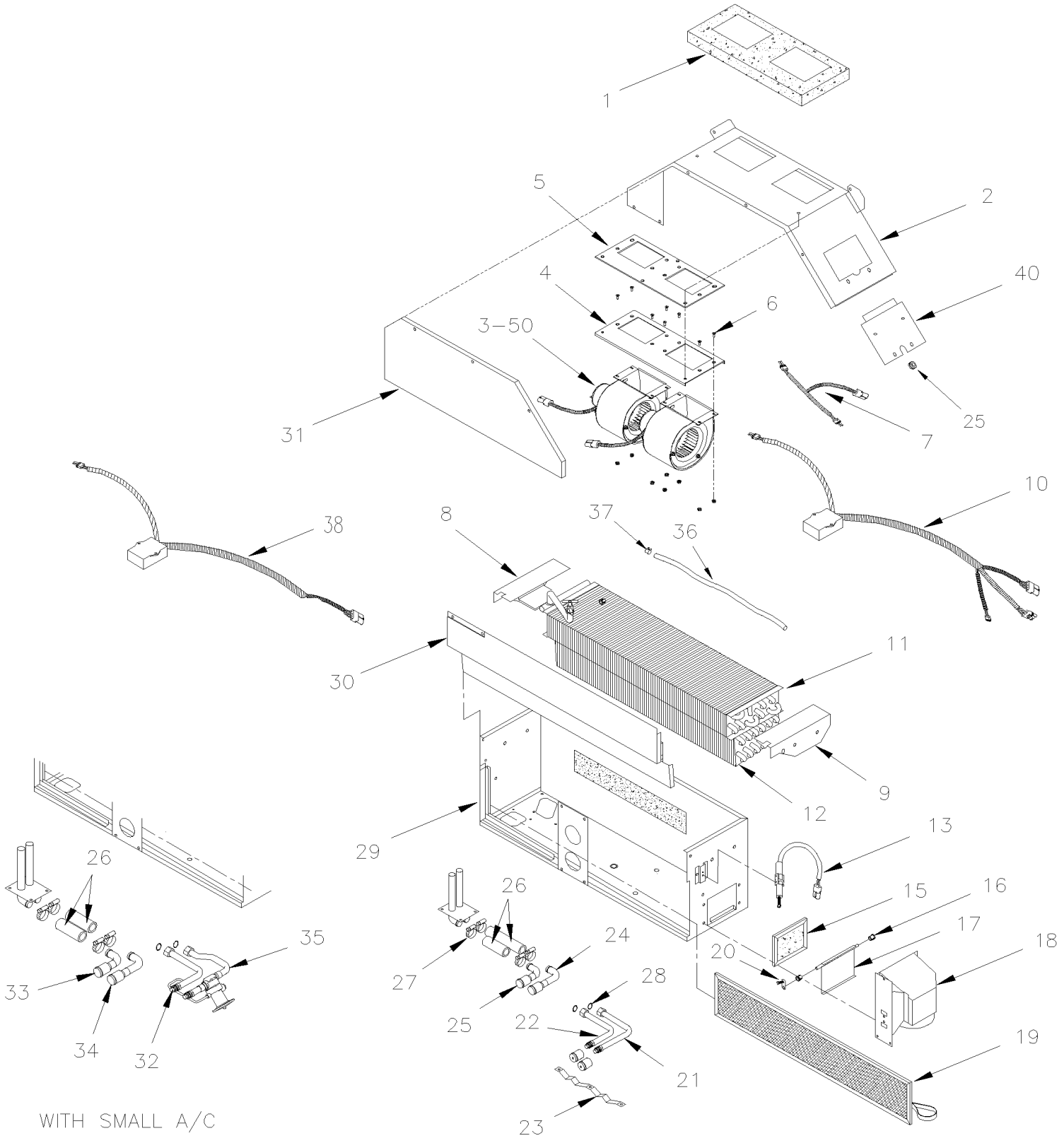

From 7-9096 To 8-9339		Date:07/2024	PAGE:Y2-2225-02

DRIVER'S HEATER & DEFROSTER ASSY WITH MUX

Item#	Part	Description	XLII 45	XLII MTH40	XLII MTH45	XLII MTH45E	NOTES
	871415	DEFROSTER & A/C UNIT ASSY			1	1	
	871416	DEFROSTER & A/C UNIT ASSY MUX			1	1	A
1	871129	. SEAL			1	1	
2	871223	. COVER			1	1	
3	871359	. BLOWER ASSY 24V / W/DOUBLE MOTOR MOUNT			2	2	
3	**871360**	**. . BLOWER & MOTOR ASSY - "M.C.C." "CCW" / FAN END**			2	2	
4	871362	. . PLATE MOUNTING			1	1	
5	871363	. . SEAL PLATE MOUNTING			1	1	
6	684605	. . SCREW CAP HEXS #10-32x1/2			8	8	
NS	500423	. . NUT HEX NYRT #10-32 SS			8	8	
7	871364	. . CABLE HARNESS			1	1	
8	871137	. BRACKET L.H.			1	1	
9	871138	. BRACKET R.H.			1	1	
10	871353	. MODULE CONTROL FAN SPEED / W/DOUBLE MOTOR			1	1	
11	871140	. HEATER COIL			1	1	
. NS	870127	. . DRAIN VALVE ROBINET VIDANGE			1	1	
12	871141	. EVAPORATOR COIL			1	1	
13	871142	. ACTUATOR, THERMAL			1	1	
15	871144	. FILTER / FRESH AIR 1/4" x 3 5/8" x 5 1/4"			1	1	
16	871025	. BUSHING / CABLE PIVOT			2	2	
17	871145	. DAMPER TRAP			1	1	
18	871225	. BOX, FRESH AIR			1	1	
19	871147	. FILTER / RECIRCULATING 1/4" x 6 1/4" x 28"			1	1	
20	871148	. LEVER , F/A DAMPER			1	1	
20	5001410	. SCREW MA CHE PH M4-0.7x16 SS			1	1	
20	502557	. NUT HEX NYRT M4-0.7 SS			1	1	
21	871229	. TUBE, A/C			1	1	
22	871228	. TUBE, A/C			1	1	
23	871226	. TUBE SUPPORT			1	1	
NS	871237	. TUBE SUPPORT			1	1	
24	871231	. TUBE HEATER			1	1	
25	871230	. TUBE HEATER			1	1	
26	503007	. HOSE 2 PLY / RADIATOR HOSE / 5/8" I.D. / S.L.			AR	AR	
27	504646	. HOSE CLAMP / 11/16"-1"1/4 / C.T. 9412			4	4	
28	507279	. O-RING / ORS FITTING / #8 NEO			2	2	
28	**Y2-2208-00**	**. A/C EXPANSION VALVE**					
29	N.P.N.	. CASING			1	1	4
30	871155	. COVER			1	1	
31	871156	. COVER / BLOWER ACCESS			1	1	
NS	5001047	. . SCREW TC PAN PH M5-0.8X10 ZP			17	17	
32	871343	. TUBE A/C			1	1	A
33	871230	. TUBE HEATER			1	1	A

From 7-9096 To 8-9339		Date:07/2024	PAGE:Y2-2225-02

DRIVER'S HEATER & DEFROSTER ASSY WITH MUX

Item#	Part	Description	XLII 45	XLII MTH40	XLII MTH45	XLII MTH45E	NOTES
34	871231	. TUBE HEATER			1	1	A
35	871344	. VALVE, EXPANSION ASSY / WITH PIPE			1	1	A
36	8860148	. TUBE, NYLON 5/16 O.D. / BLACK S.L.			1	1	
37	N8888160	. SPRING CLIP			1	1	
40	871227	. HARNESS COVER			1	1	
		A) WITH SMALL A/C SYSTEM					
		4) NO PARTS NUMBER					

From 7-9096 To 8-9339		Date:07/2024	PAGE:871360
BLOWER & MOTOR ASSY - "M.C.C." "CCW" / FAN END			

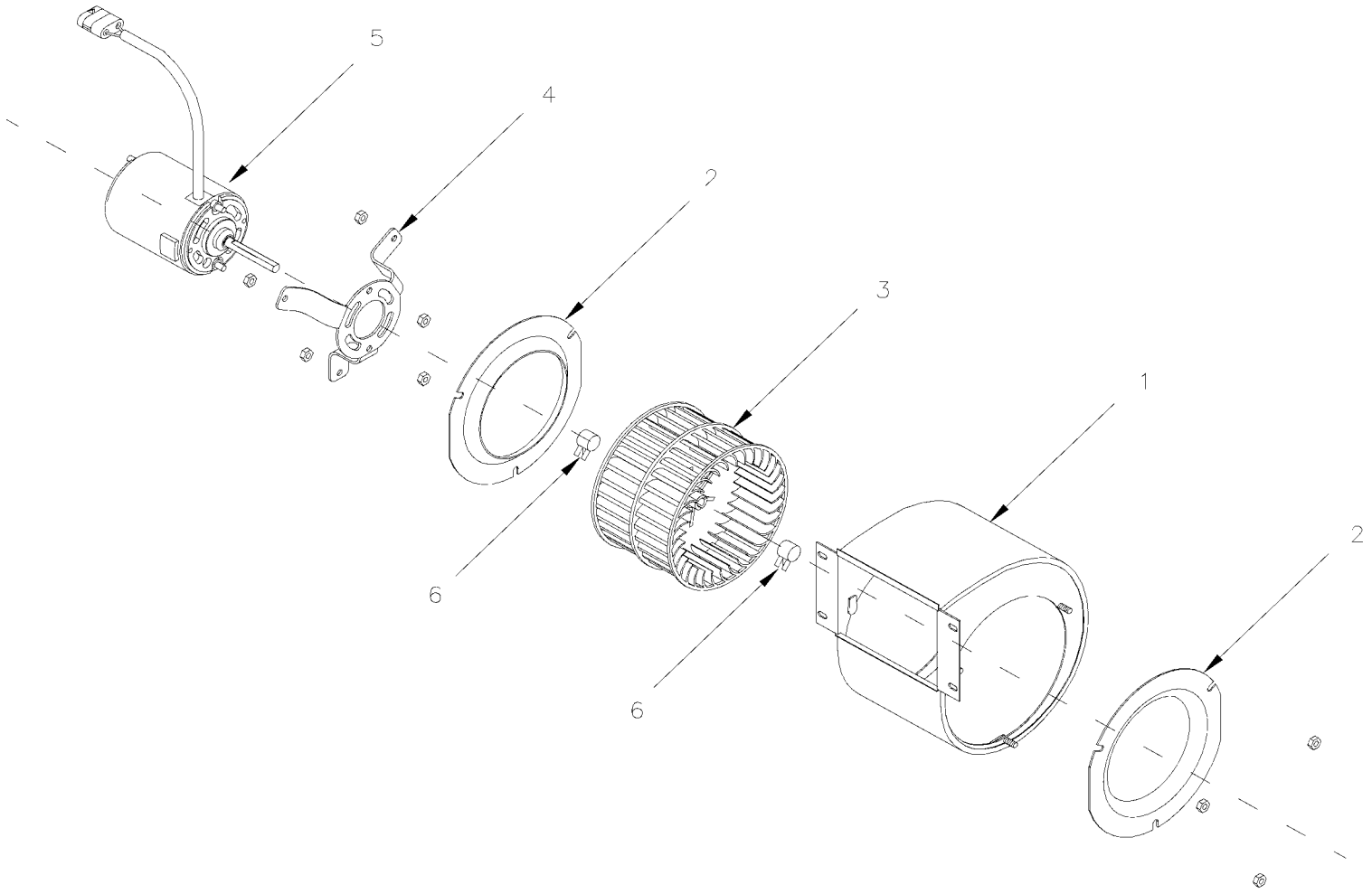

From 7-9096 To 8-9339		Date:07/2024	PAGE:871360

BLOWER & MOTOR ASSY - "M.C.C." "CCW" / FAN END

Item#	Part	Description	XLII 45	XLII MTH40	XLII MTH45	XLII MTH45E	NOTES
		BLOWER ASSY 24V / CCW	1	1	1	1	
1	871365	. BLOWER HOUSING	1	1	1	1	
2	N8889479	. VENTURY	2	2	2	2	
3	871133	. BLOWER WHEEL / PLASTIC 5 1/8" x 3 1/2" x 5/16" x I.D.	1	1	1	1	
4	N8890530	. MOUNTING MOTOR BRACKET	1	1	1	1	
5	871366	. MOTOR ASSY 24V / CCW	1	1	1	1	
6	N8888160	. SPRING CLIP	2	2	2	2	

From Y-7046 To 8-9339		Date:07/2024	PAGE:Y2-2230-00
DEFROSTER - INSTALLATION			

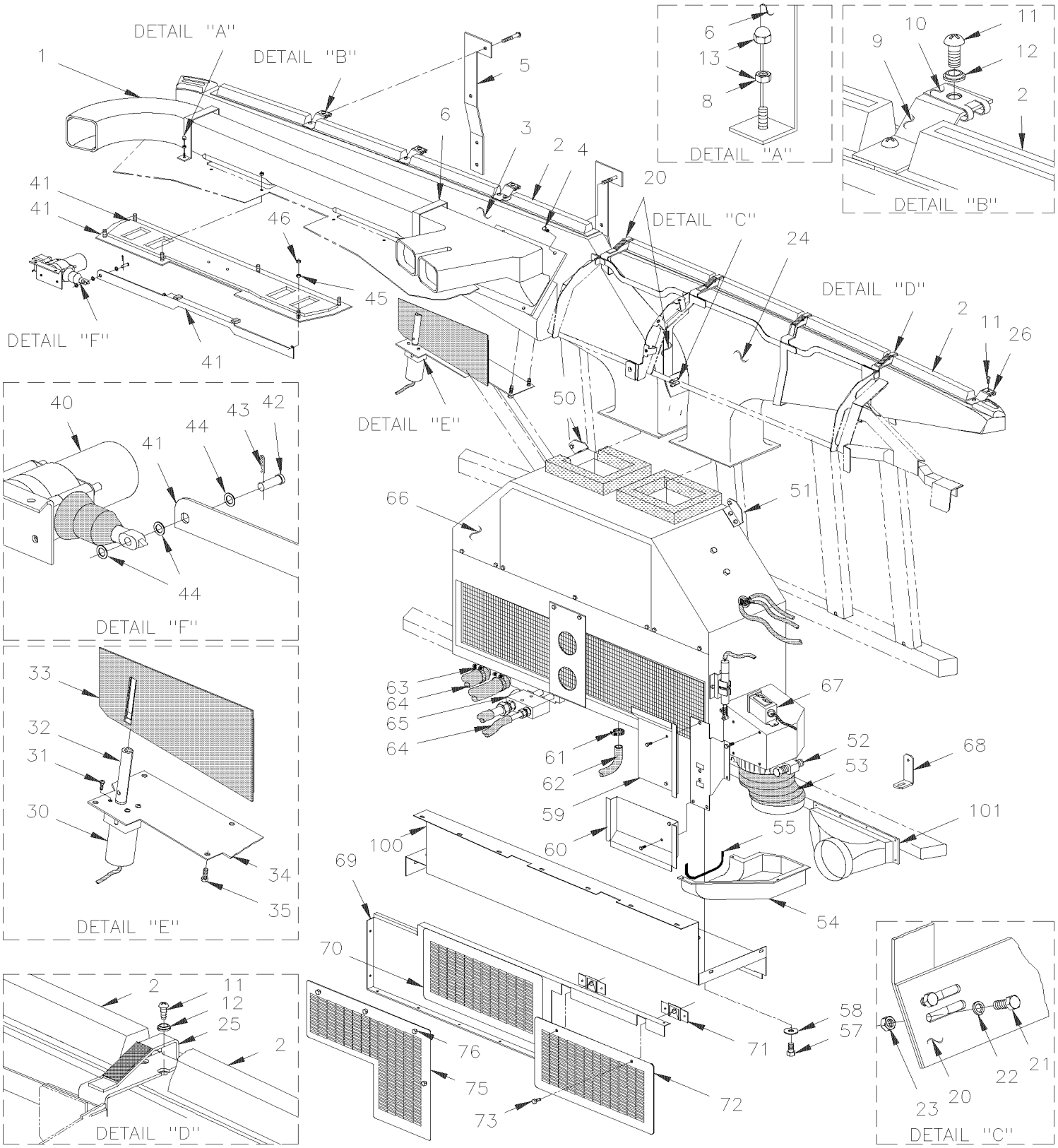

From Y-7046 To 8-9339		Date:07/2024	PAGE:Y2-2230-00
DEFROSTER - INSTALLATION			

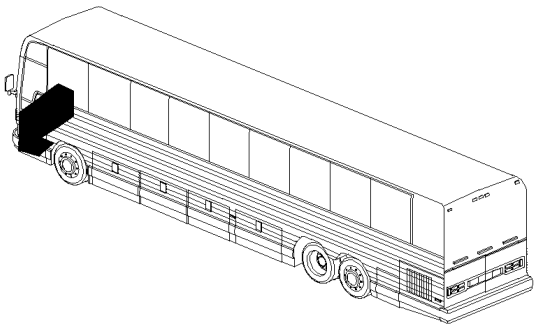

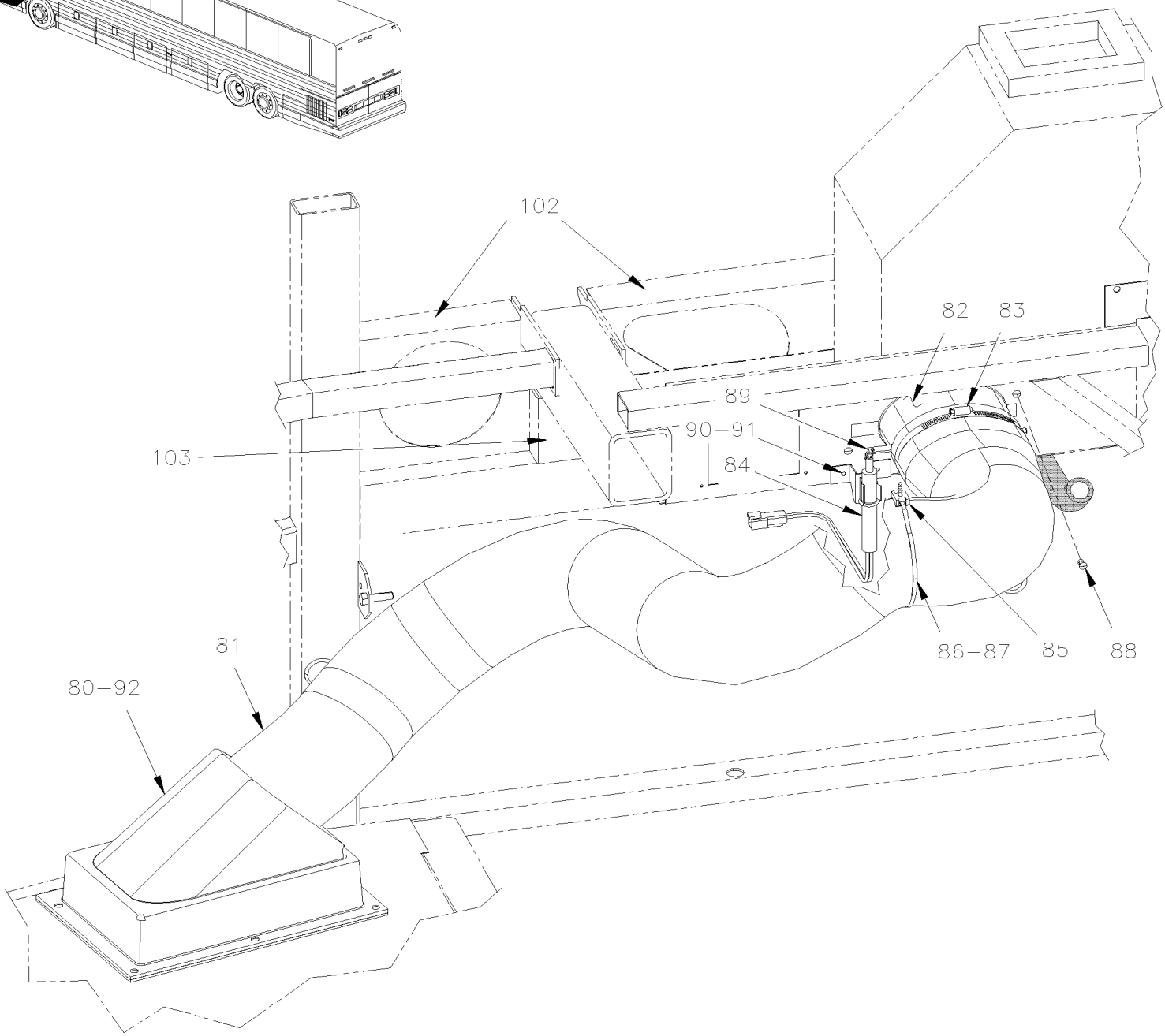

From Y-7046 To 8-9339		Date:07/2024	PAGE:Y2-2230-00
DEFROSTER - INSTALLATION			

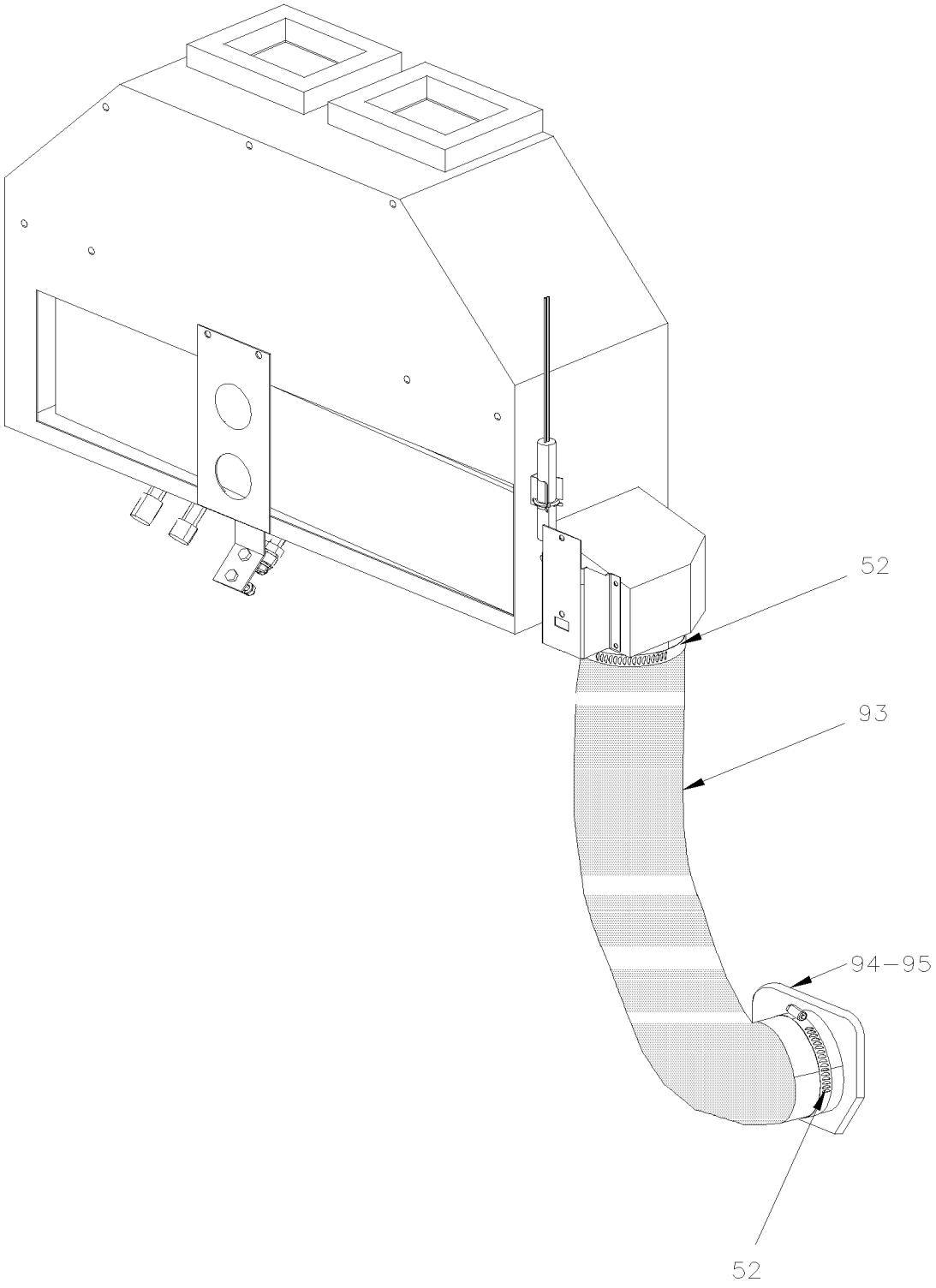

From Y-7046 To 8-9339		Date:07/2024	PAGE:Y2-2230-00

DEFROSTER - INSTALLATION

Item#	Part	Description	XLII 45	XLII MTH40	XLII MTH45	XLII MTH45E	NOTES
1	392057	DUCT DRIVER LH SECTION To 2-7864	1	1	1	1	G
1	392211	DUCT DRIVER LH SECTION From 2-7865	1	1	1	1	G
1	392084	DUCT DRIVER RH SECTION To 2-7864	1	1	1	1	G
1	392212	DUCT DRIVER RH SECTION From 2-7865	1	1	1	1	G
. NS	391003	. SEAL DUCT From 2-7865	1	1	1	1	G
NS	392064	SUPPORT	1	1	1	1	
NS	392085	. DEFLECTOR (INSIDE DUCT)	1	1	1	1	
2	392045	LOUVER To 5-8532	8				
2	392045	LOUVER From 5-8533 To 6-8906	2				
2	392276	LOUVER From 5-8533 To 6-8906	6				
2	392045	LOUVER		8	8	8	
NS	392046	LOUVER CORNER	2	2	2	2	
3	392014	DEFROSTER DUCT ASSY STREETSIDE To 6-8906	1				B
3	391925	DEFROSTER DUCT STREETSIDE To 6-8906	1				
3	392044	DEFROSTER DUCT STREETSIDE		1	1	1	
NS	392292	GASKET / DRIVER'S DUCT & WINDSHIELD DUCT	1	1	1	1	
NS	391979	DEFLECTOR / (INSIDE OF DUCT)	1	1	1	1	
NS	392160	SUPPORT / DEFROSTER DUCT		1	1	1	
NS	392161	SUPPORT / DEFROSTER DUCT MTH 89"				1	
4	500641	SCREW TP PAN PH #8x3/4 Z050	1	1	1	1	
4	500841	SCREW TP PAN PH #14x3/4 Z050					
5	392016	STRAP / TO FIX DUCT LH TO STRUCTURE To 2-7864	2	2	2	2	
6	392015	STRAP / TO FIX DUCT DRIVER TO STRUCTURE To 2-7864	2	2	2	2	
8	502557	NUT HEX NYRT M4-0.7 SS	4	4	4	4	
10	5001405	NUT SPR U M4-0.7 0.8-4.0x9.5	AR	AR	AR	AR	
11	5001411	SCREW MA FL PH M4-0.7x20 BK	AR	AR	AR	AR	
12	500345	WASHER FN CKF .187x.500x.090 BR BK	AR	AR	AR	AR	
13	5001404	NUT HEX CAP M4-0.7 SS	4	4	4	4	
20	391956	STRUCTURE / R.H. To 6-8906	1				
20	391996	STRUCTURE / R.H.		1	1	1	
21	502529	SCREW MA BDG PH M5-0.8x12 BZC	2	2	2	2	
22	500440	WASHER FL .250x.562x.065 Z050	2	2	2	2	
23	502782	NUT HEX NYRT M5-0.8 Z050	2	2	2	2	
24	391923	DEFROSTER DUCT CURBSIDE To Y-7133	1	1	1	1	
24	392049	DEFROSTER DUCT CURBSIDE From Y-7134	1	1	1	1	
NS	453585	HOSE ADAPTOR / CURBSIDE DUCT From Y-7134	1	1	1	1	C
NS	453584	HOSE ADAPTOR / WINDSHIELD From Y-7134	1	1	1	1	C
NS	453588	HOSE 510MM From Y-7134	1	1	1	1	C
NS	392268	DEFLECTOR From 5-8361 To 6-8906	1				
25	392018	STRAP R.H. / TO FIX DUCT TO STRUCTURE	1	1	1	1	
25	392019	STRAP L.H. / TO FIX DUCT TO STRUCTURE	1	1	1	1	
26	392017	SUPPORT / R.H. WINDSHIELD	1	1	1	1	

From Y-7046 To 8-9339		Date:07/2024	PAGE:Y2-2230-00

DEFROSTER - INSTALLATION

Item#	Part	Description	XLII 45	XLII MTH40	XLII MTH45	XLII MTH45E	NOTES
30	391962	DAMPER	1	1	1	1	
30	392282	DAMPER ASSY From 6-8906			1	1	
30	871424	. MOTOR	1	1	1	1	
31	N.P.N.	. SCREW	7	7	7	7	4
32	N.P.N.	. SHAFT	1	1	1	1	4
33	N.P.N.	. TRAP ASSY	1	1	1	1	4
34	N.P.N.	. PLATE	1	1	1	1	4
35	N.P.N.	SCREW	4	4	4	4	4
NS	563429	SWITCH MAGNETIC ASSY	1	1	1	1	
. NS	562641	. MAGNET	1	1	1	1	
40	890009	LOCK ACTUATOR / 12V	1	1	1	1	
. NS	562076	. CONNECTOR / PACK-CON I / FEMALE HOUSING / 2C / PED 8911772	1	1	1	1	
41	392063	DAMPER, FOOT ASSY	1	1	1	1	
42	502023	. PIN, CLEVIS 1/4 x 51/64	1	1	1	1	
43	502180	. PIN HITCH CLIP 3/32 x 1/2 Z050	1	1	1	1	
44	500411	. WASHER FL .260x.697x.050 SS	2	2	2	2	
NS	563429	. SWITCH MAGNETIC ASSY	1	1	1	1	
. NS	562641	. . MAGNET	1	1	1	1	
45	N.P.N.	SPACER	6	6	6	6	4
46	5001036	SCREW MA PAN PH M4-0.7x10 Z050	6	6	6	6	
50	373551	ATTACHMENT L.H.	1	1	1	1	
51	373552	ATTACHMENT R.H.	1	1	1	1	
NS	500642	SCREW TP PAN PH #10x3/4 Z050	2	2	2	2	
NS	504114	RIVET POP DOME OE 3/16x1/4 AL	4	4	4	4	
52	504235	HOSE CLAMP / 3"9/16"-4"1/2 SS / HS-64	2	2	2	2	
53	373630	HOSE 4" I.D. X 350MM To 4-8207		1	1	1	
53	373955	HOSE 4" I.D. X 500MM From 3-8109 To 6-8906	1				
53	503434	. HOSE FLEXIBLE / AIR DUCT 4" I.D. X 12`/ RUBBER	AR	AR	AR	AR	
54	373681	DUCT FRESH AIR To 3-8108	1				D
55	373727	RUBBER SEAL W/"U" SHAPE CLIP / 7/16 O.D. X 180MM To 3-8108	1				D
55	373738	RUBBER SEAL W/"U" SHAPE CLIP / 7/16 O.D. X 2500MM To 3-8108	1				D
55	506302	RUBBER EXTRUSION TRIM SEAL / GRIP .024 / 7/16" HOLLOW BULB C.T.L. To 3-8108	AR				D
57	500179	SCREW CAP HEX 5/16-18x3/4 G5 Z050	3	3	3	3	
58	500462	WASHER FL .343x1.500x.083 SS	3	3	3	3	
NS	500476	WASHER LO SPT .317x.586x.078 Z050	3	3	3	3	
59	453430	DEFLECTOR, UPPER To 6-8906	1				
59	453343	DEFLECTOR, UPPER		1	1	1	
NS	453345	FOAM 5" X 3" X 1"		1	1	1	
60	453431	DEFLECTOR, LOWER To 6-8906	1				
NS	502761	SCREW TP BDG PH #10x3/4 SS BK	5	5	5	5	
NS	500803	NUT SPR J #10A .035-.050	5	5	5	5	
NS	506268	TAPE RUB ADH1 URE 3/8" x 1/2" x 25' / GREY 1820	AR	AR	AR	AR	

From Y-7046 To 8-9339		Date:07/2024	PAGE:Y2-2230-00

DEFROSTER - INSTALLATION

Item#	Part	Description	XLII 45	XLII MTH40	XLII MTH45	XLII MTH45E	NOTES
61	504014	HOSE CLAMP / 1/4"-5/8" SS / HM-4	2	2	2	2	
62	373424	HOSE 1/2" I.D. X 985MM To 6-8906	1				
62	373680	HOSE 1/2" I.D. X 1135MM		1	1	1	
62	503666	HOSE 1/2" I.D. 100' / S.L.	AR	AR	AR	AR	
NS	504356	GROMMET / .625x.875x.062x.312x1.125	1	1	1	1	
NS	590286	DRAIN BOOT 1 1/4" I.D. X 4" / FLAT	1	1	1	1	
63	504646	HOSE CLAMP / 11/16"-1"1/4 / C.T. 9412	2	2	2	2	
64	**Y2-2222-10**	**A/C & HEATING LINE FRONT SECTION**					
65	**Y2-2208-00**	**A/C EXPANSION VALVE**					
66	**Y2-2225-00**	**DRIVER'S HEATER & DEFROSTER ASSY To 5-8469**					
66	**Y2-2225-01**	**DRIVER'S HEATER & DEFROSTER ASSY From 5-8470 To 7-9095**					
66	**Y2-2225-02**	**DRIVER'S HEATER & DEFROSTER ASSY WITH MUX From 7-9096**					
67	950035	THERMOSTAT		1	1	1	A
NS	500583	SCREW TP PAN PH #6x1/2 Z050		2	2	2	A
68	373754	ANGLE SUPPORT / CURBSIDE / 25MM X 35MM X 65MM	1	1	1	1	
69	373640	GRILLE ASSY W/SUPPORT		1	1	1	
69	373633	. SUPPORT		1	1	1	
70	453338	. GRILL AIR / FRONT STEPWELL / RETURN / 200MM X 408MM		1	1	1	
71	504605	. RECEPTACLE 6 MM		2	2	2	
NS	681283	. TAPE RUB ADH2 ACRYLIC .045" x 1/2" x 108' / WHITE 4945		AR	AR	AR	
NS	506268	. TAPE RUB ADH1 URE 3/8" x 1/2" x 25' / GREY 1820		AR	AR	AR	
72	453341	GRILL AIR / FRONT STEPWELL / RETURN / 197MM X 408MM		1	1	1	
73	504681	. STUD 6MM (DZUS)		2	2	2	
NS	504604	. FASTENER		2	2	2	
75	453428	GRILL AIR / FRONT STEPWELL / RETURN / 309MM X 424MM To 6-8906	1				
76	504681	. STUD 6MM (DZUS) To 6-8906	4				
76	504604	. FASTENER To 6-8906	4				
80	373990	AIR INLET ASSY To 6-8906	1				
. NS	373952	. AIR INLET To 6-8906	1				
. NS	373989	. SCREEN 171MM X 284MM SS To 6-8906	1				
81	373993	HOSE 5" I.D. 1600MM To 6-8906	1				
. NS	503741	. HOSE FLEXIBLE / AIR DUCT 5" I.D. X 12`/ PLASTIC To 6-8906	AR				
82	373984	AIR INLET ASSY W/ DAMPER To 6-8906	1				
. NS	373969	. AIR INLET To 6-8906	1				
. NS	453954	. DAMPER TRAP To 6-8906	1				
. NS	453953	. SHAFT To 6-8906	1				
83	504324	HOSE CLAMP / 4"1/2-6"1/2 SS / HS-96 To 6-8906	1				
84	373415	ACTUATOR ASSY To 6-8906	1				
85	500235	SCREW TP BDG PH #6x3/4 N500 To 6-8906	1				
86	504013	TIE MOUNT / 1/4" X 1/4" I.D. To 6-8906	1				
87	504637	CABLE TIE / 3/16" x 13" To 6-8906	4				
88	504379	RIVET POP DOME OE 3/16x1/4 SS To 6-8906	10				

From Y-7046 To 8-9339		Date:07/2024	PAGE:Y2-2230-00

DEFROSTER - INSTALLATION

Item#	Part	Description	XLII 45	XLII MTH40	XLII MTH45	XLII MTH45E	NOTES
89	503402	TUBE, NYLON 1/4 O.D. / BLACK S.L. To 6-8906	AR				
90	172780	SUPPORT / ACTUATOR To 6-8906	1				
91	504104	RIVET POP DOME OE 1/8x1/8 SS To 6-8906	2				
92	215126	ATTACHMENT STRIP / "Z" SHAPE / 25MM X 115MM To 6-8906	2				
93	373955	HOSE 4" I.D. X 500MM From 3-8109	1				
93	374010	HOSE 4" I.D. X 650MM From 4-8208		1	1	1	
94	373930	HOSE ADAPTOR 4" From 3-8109	1	1	1	1	
95	373997	GRILLE 111MM X 111MM To 3-8108	1	1	1	1	
95	373933	GRILLE 111MM X 111MM From 3-8109	1	1	1	1	
95	476156	CLOSING PLATE 39MM X 257MM To 3-8108	1	1	1	1	
95	476159	CLOSING PLATE 55MM X 257MM To 3-8108	1	1	1	1	
95	373996	HOSE ADAPTOR 4" O.D.	1				
100	172356	SUPPORT / DEFROST & A/C UNIT To 3-8108	1				
100	172753	SUPPORT / DEFROST & A/C UNIT From 3-8109 To 6-8906	1				
100	172316	SUPPORT / DEFROST & A/C UNIT		1	1	1	
101	**Y2-1851-00**	**FRONT CAP - INSTALLATION**					
102	251079	PANEL FRONT / TUBE 26 & 11 To 6-8906	1				
103	214243	TUBE / TUBE 26 AND DR 92MM x 1 1/2" x 3" To 6-8906	1				
NS	373998	KIT, ADAPTOR HEATER HOSE / NEW AIR INLET STREET SIDE / NEW AIR INLET STREETSIDE To 3-8108	AR				E
. NS	IS-02086	. SEE INSTRUCTION SHEET To 3-8108	1				E
NS	374011	KIT, ADAPTOR HEATER HOSE / NEW AIR INLET CURBSIDE / NEW AIR INLET CURBSIDE To 4-8207		1	1	1	F
. NS	IS-02113	. SEE INSTRUCTION SHEET To 4-8207		1	1	1	F
NS	373995	KIT, ADAPTOR HEATER HOSE / NEW AIR INLET CURBSIDE / NEW AIR INLET CURBSIDE To 3-8108	1	1	1	1	
. NS	IS-02054	. SEE INSTRUCTION SHEET To 3-8108	1	1	1	1	
NS	871318	DEFROSTER DUCT DEFLECTOR REPLACEMENT KIT To 5-8469	1	1	1	1	
. NS	IS-04902	. SEE INSTRUCTION SHEET To 5-8469	1	1	1	1	
		A) WITH SMALL A/C SYSTEM ONLY					
		B) INCLUDE ITEMS 2, 3, & 30 TO 35					
		C) FEED AIR TO CENTER POST WINDSHIELD					
		D) FOR PRODUCT IMPROVEMENT "WINDSHEILD DEFROSTER" ASK KIT# 373998					
		E) KIT INCLUDES ALL ITEMS 80 TO 92					
		F) KIT INCLUDES ALL ITEMS 93 -94 & 95					
		G) FOR PRODUCT IMPROVEMENT, USE KIT #871318 AND SEE INSTRUCTION SHEET IS-04902					
		4) NO PARTS NUMBER					

From Y-7046 To 6-8906		Date:07/2024	PAGE:870844
BLOWER & MOTOR ASSY - "M.C.C." "CW" / FAN END			

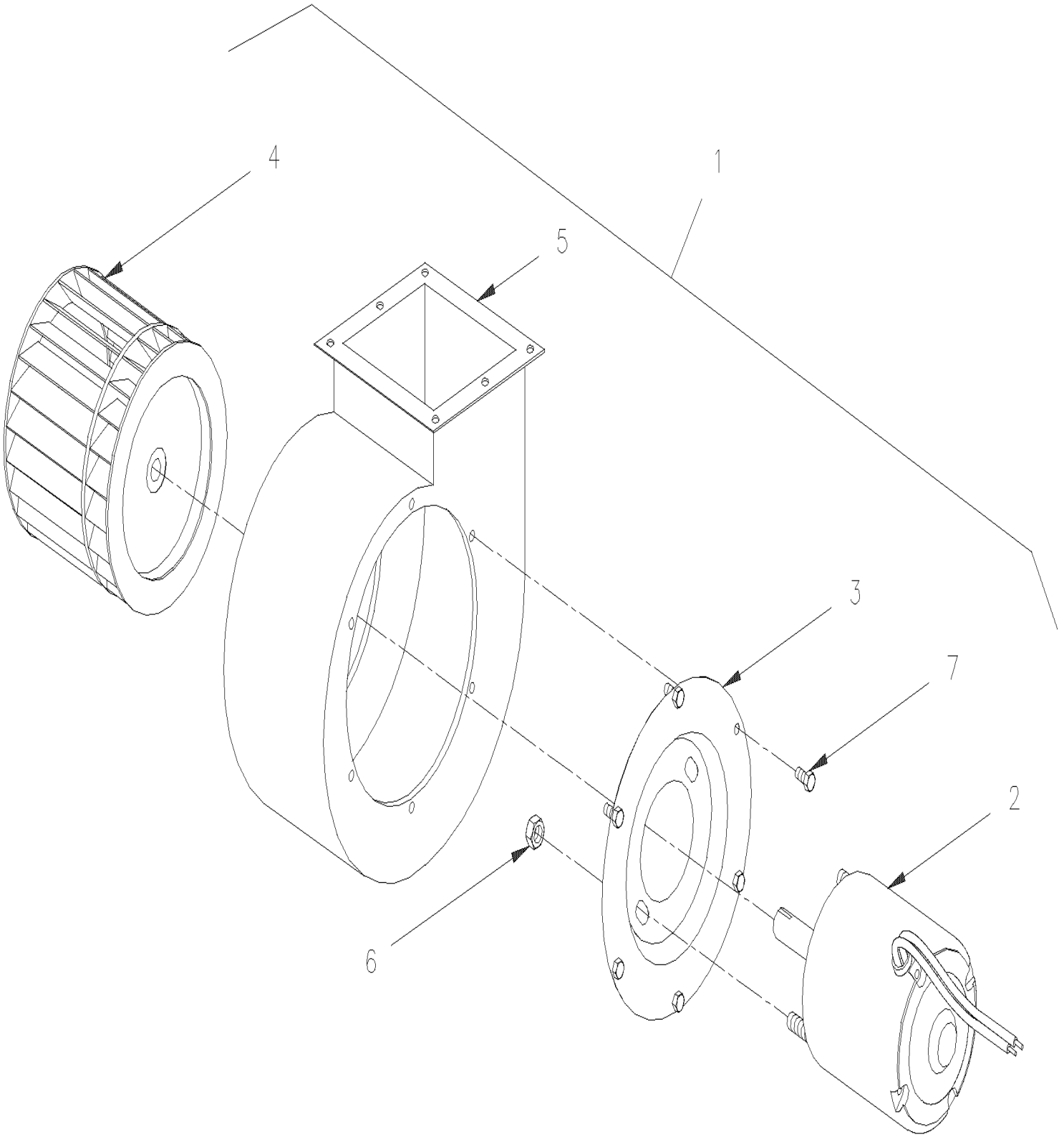

From Y-7046 To 6-8906		Date:07/2024	PAGE:870844

BLOWER & MOTOR ASSY - "M.C.C." "CW" / FAN END

Item#	Part	Description	XLII 45	XLII MTH40	XLII MTH45	XLII MTH45E	NOTES
1		BLOWER ASSY 24V / CW	1	1	1	1	
2	562167	. MOTOR ASSY / 24V	1	1	1	1	
3	871020	. PLATE MOUNTING / MOTOR	1	1	1	1	
4	871017	. BLOWER WHEEL / STEEL	1	1	1	1	
5	871440	. HOUSING BLOWER	1	1	1	1	
6	500786	. NUT HEX #10-24 Z050	2	2	2	2	
7	500978	. SCREW CAP HEX #10-24x3/4 Z050	6	6	6	6	

From 5-8470 To 8-9339		Date:07/2024	PAGE:871360
BLOWER & MOTOR ASSY - "M.C.C." "CCW" / FAN END			

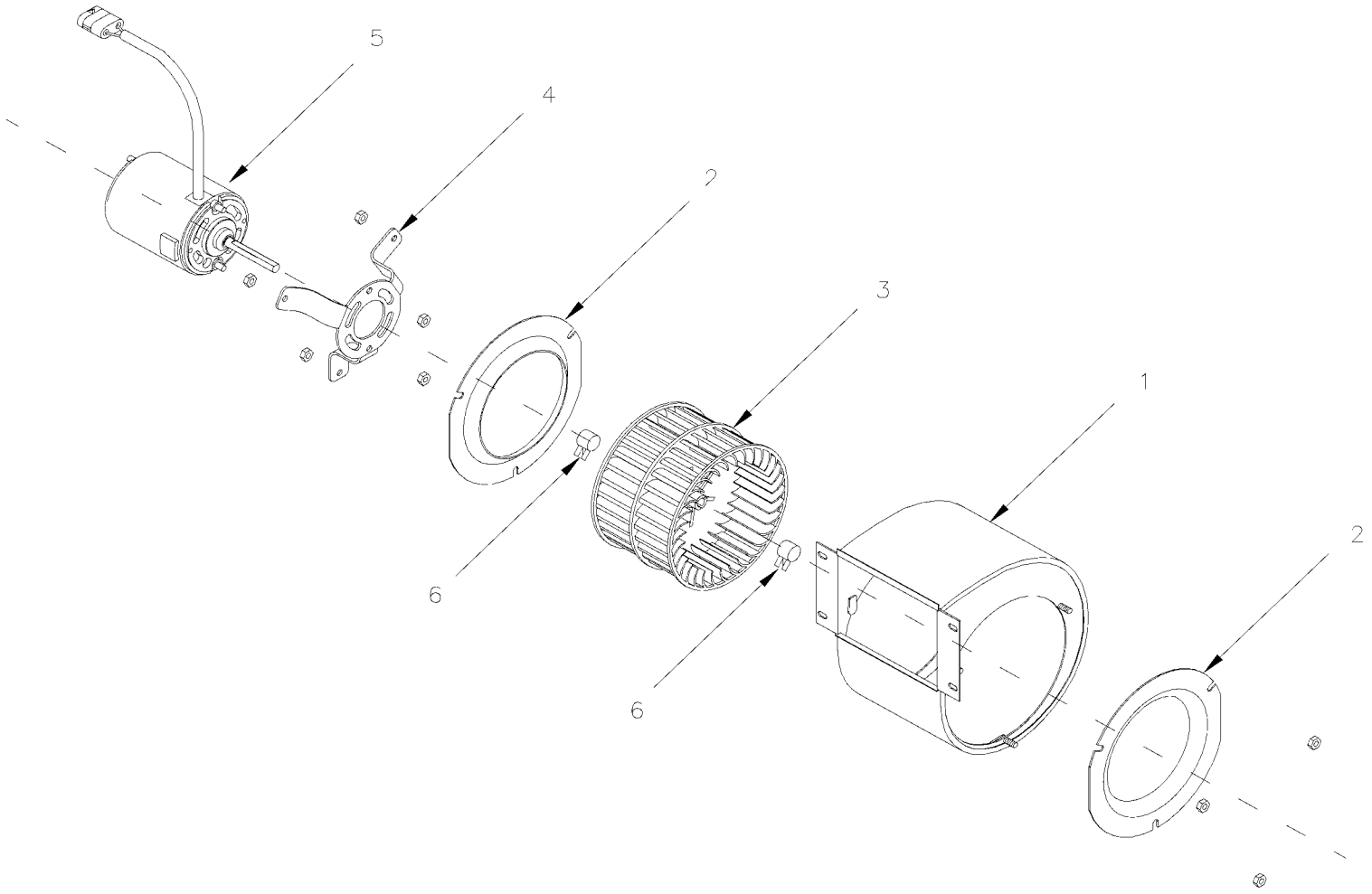

From 5-8470 To 8-9339		Date:07/2024	PAGE:871360

BLOWER & MOTOR ASSY - "M.C.C." "CCW" / FAN END

Item#	Part	Description	XLII 45	XLII MTH40	XLII MTH45	XLII MTH45E	NOTES
		BLOWER ASSY 24V / CCW	1	1	1	1	
1	871365	. BLOWER HOUSING	1	1	1	1	
2	N8889479	. VENTURY	2	2	2	2	
3	871133	. BLOWER WHEEL / PLASTIC 5 1/8" x 3 1/2" x 5/16" x I.D.	1	1	1	1	
4	N8890530	. MOUNTING MOTOR BRACKET	1	1	1	1	
5	871366	. MOTOR ASSY 24V / CCW	1	1	1	1	
6	N8888160	. SPRING CLIP	2	2	2	2	

From 3-8131 To 8-9339		Date:07/2024	PAGE:Y2-2240-10
UPPER WINDSHIELD FAN - INSTALLATION			

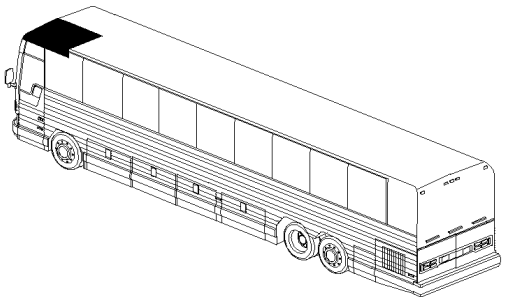

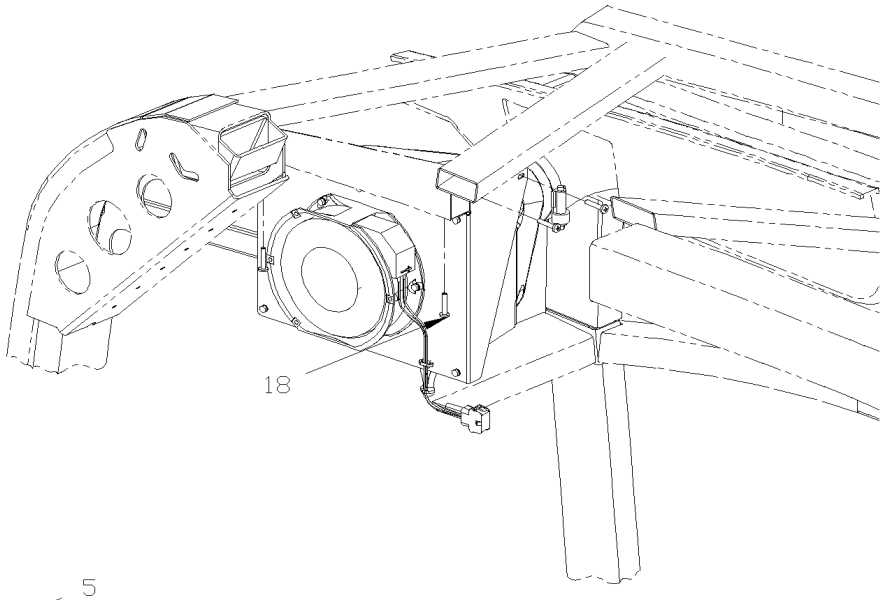

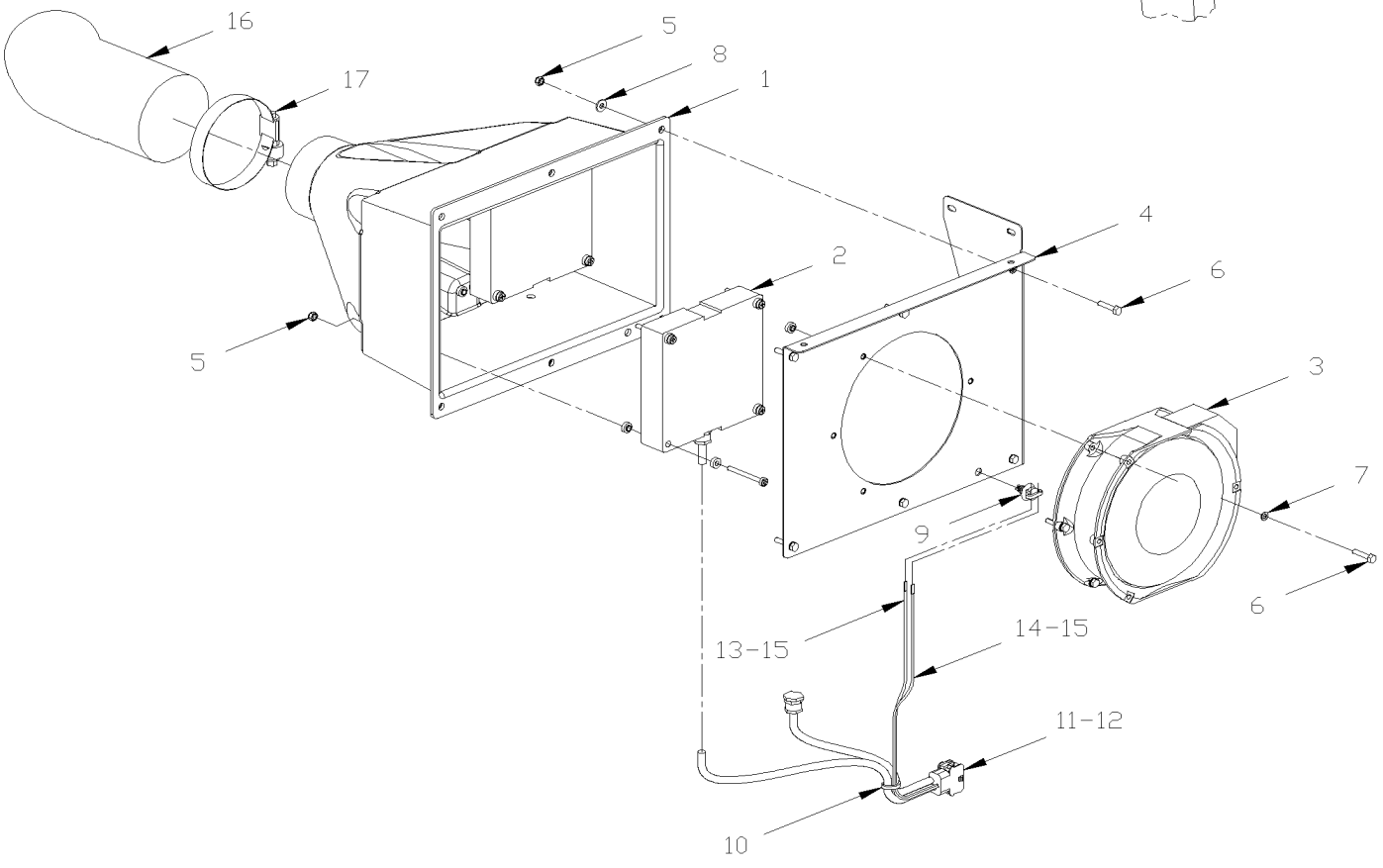

From 3-8131 To 8-9339		Date:07/2024	PAGE:Y2-2240-10

UPPER WINDSHIELD FAN - INSTALLATION

Item#	Part	Description	XLII 45	XLII MTH40	XLII MTH45	XLII MTH45E	NOTES
	373936P	HEATER FAN ASS	1			1	
1	373938	. SHROUD	1			1	
2	871324	. HEATER COIL 300W	1			1	
3	871326	. FAN AXIAL 12/28V 230CFM	1			1	
4	373939	. SUPPORT, FAN TOP WINDSHIELD	1			1	
5	500590	. NUT HEX NYRT M4-0.7 Z050	11			11	
6	500588	. SCREW CAP HEX M4-0.7x20 G8.8 Z050	7			7	
7	502636	. WASHER LO SPT 4.1x7.6x0.9 Z050	7			7	
8	500438	. WASHER FL .187x.437x.050 Z050	3			3	
9	509815	. TIE MOUNT / ATTACHMENT W/TREE MOUNT	1			1	
10	504637	. CABLE TIE / 3/16" x 13"	2			2	
11	561552	. CONNECTOR / UNIVERSAL MATE-N-LOK / PH 6C / AMP 1-480705-0	1			1	
12	561671	. PIN TERMINAL / 24-18 / AMP 350690-1	6			6	
13	562588	. WIRE CABLE 14 / RED / TXL	AR			AR	
14	562585	. WIRE CABLE 14 / BLACK / TXL	AR			AR	
15	561625	. TAB RECEPTACLE TERMINAL INSUL. NYLON / 16-1 / AMP 3-520125-2	2			2	
16	373941	. HOSE 200MM X 3" I.D.	1			1	
17	504026	. HOSE CLAMP / 2"13/16-3"3/4 SS / HS-52	1			1	
18	500642	SCREW TP PAN PH #10x3/4 Z050	4			4	

From Y-7046 To 6-8906		Date:07/2024	PAGE:Y2-2240-20
BLOWER VENTILATION - PARCEL RACK			

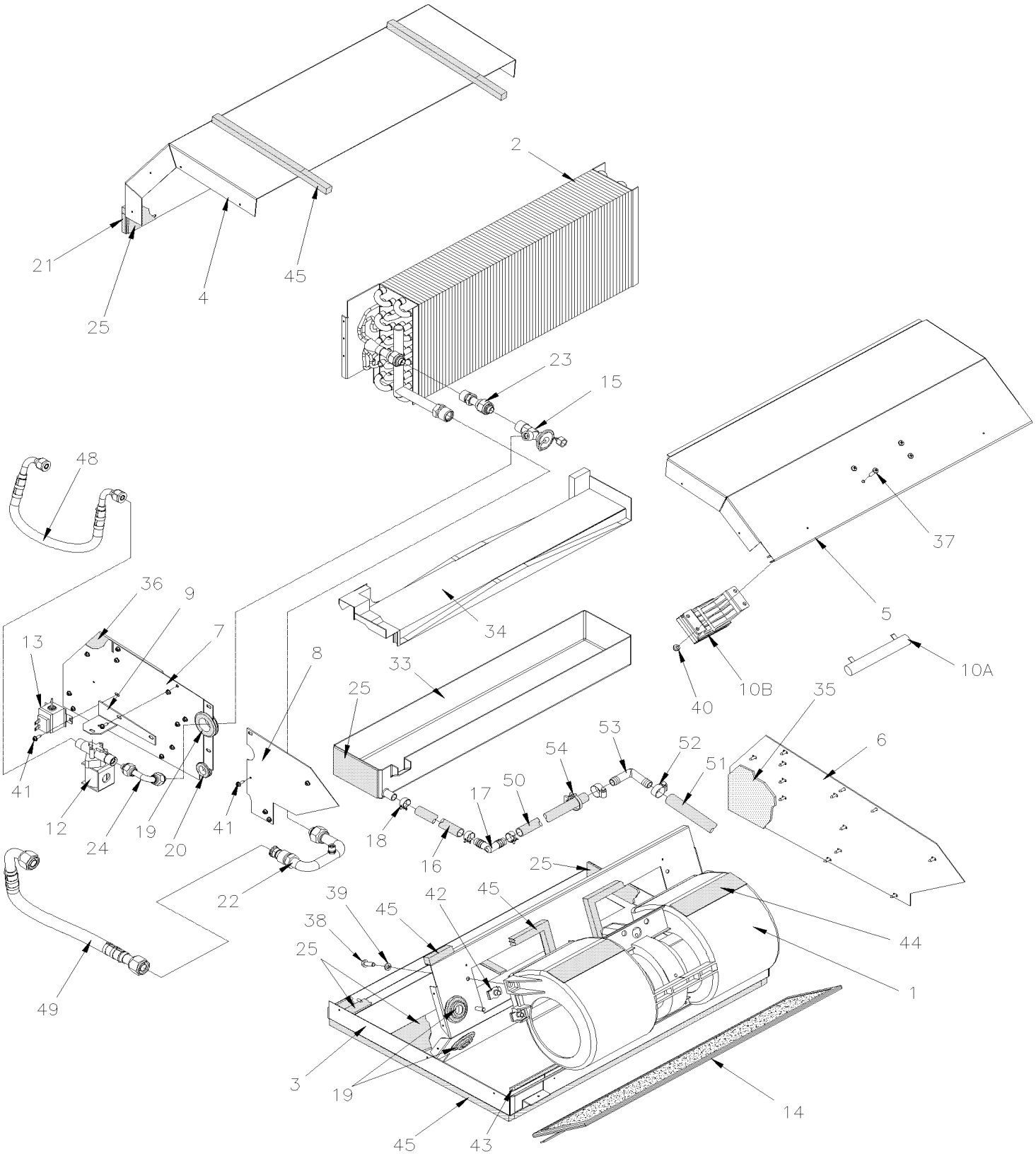

From Y-7046 To 6-8906		Date:07/2024	PAGE:Y2-2240-20
BLOWER VENTILATION - PARCEL RACK			

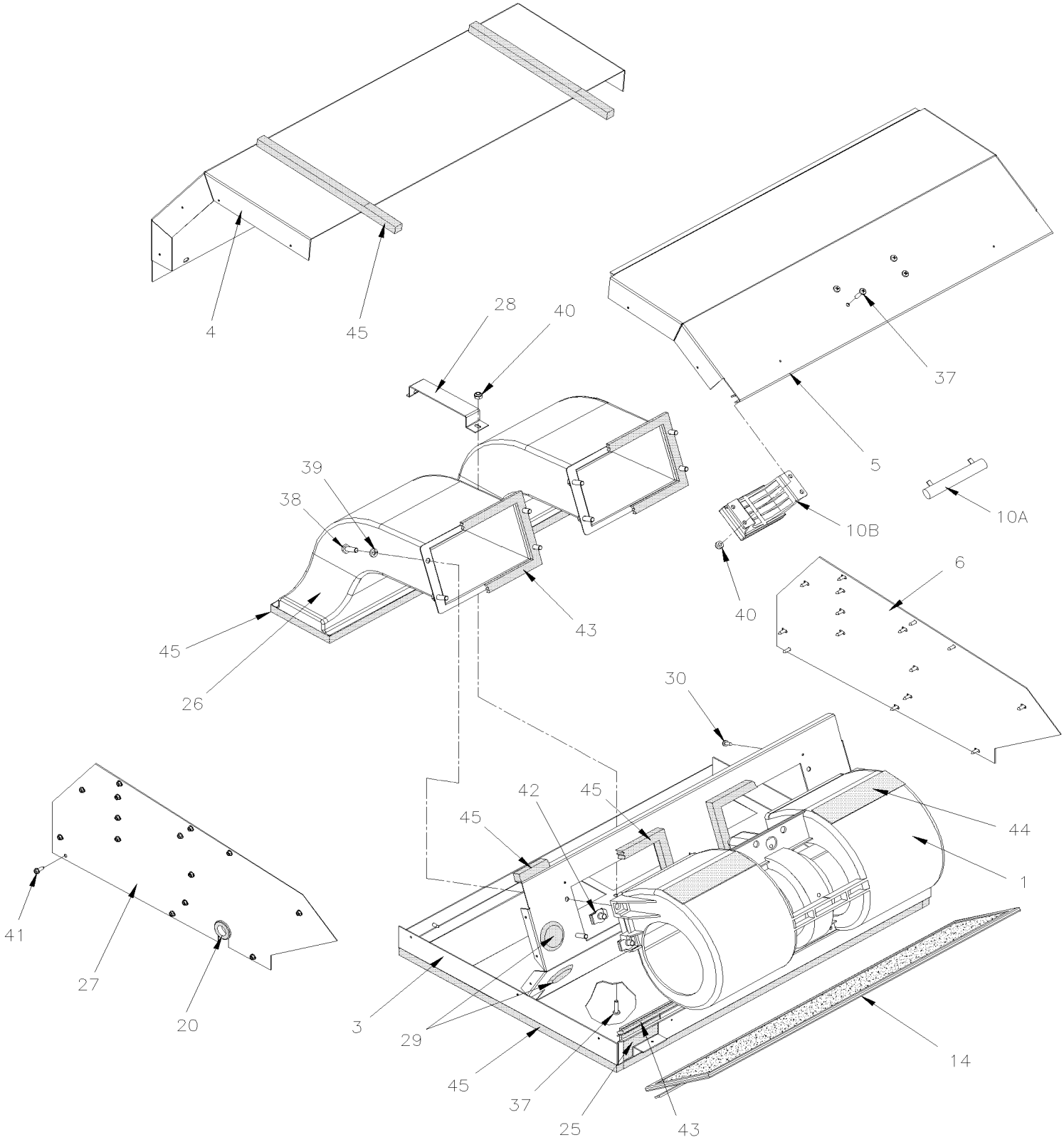

From Y-7046 To 6-8906		Date:07/2024	PAGE:Y2-2240-20

BLOWER VENTILATION - PARCEL RACK

Item#	Part	Description	XLII 45	XLII MTH40	XLII MTH45	XLII MTH45E	NOTES
	950328	VENTILATION UNIT ASSY W/A/C SYSTEM	1				
	871173	VENTILLATION UNIT ASSY	1				
1	**Y2-2240-25**	**. BLOWER ASSY - PARCEL RACK**					
2	950321	. EVAPORATOR COIL	1				
3	871266	. BASE PLATE ASSY	1				
4	871189	. TOP COVER	1				
5	871268	. BLOWER COVER	1				
6	871267	. LEFT SIDE PANEL	1				
7	871278	. RIGHT SIDE PANEL FRONT	1				
8	871279	. RIGHT SIDE PANEL REAR	1				
9	871280	. SOLENOID MOUNTING BRACKET	1				
10A	871261	. RESISTOR 100 WATT / CYLINDRICAL	1				
10B	871453	. MODULE RESISTOR 100 WATT	1				
11	871264	. WIRE HARNESS	1				
12	871282	. LIQUID FREON SOLENOID	1				
13	871283	. THERMOSTAT	1				
14	871159	. FILTER 1/4" x 5 3/4" x 23"	1				
15	871277	. EXPANSION VALVE	1				
16	503707	. HOSE / PVC REINFORCED 1/2" I.D. 100' / S.L.	2				
17	5011230	. UNION ELBOW 90º / HOSE BARB FITTING / #8x#8 PLAS	1				
18	Call order desk	. HOSE CLAMP 1/2"	3				P
19	G5009550	. GROMMET 5/8"	3				
20	N8889852	. GROMMET	1				
21	Call order desk	. MOLDING 5/16x172	AR				P
22	871276	. LO-SIDE TAIL PIPE ELBOW	1				
23	871275	. HARDLINE - TXV TO COIL	1				
24	871281	. HARDLINE - TXV TO SOLENOID	1				
25	Call order desk	. NEOPRENE / 1/8"	AR				P
26	871262	. DUCT ASSY	2				
27	871265	. RIGHT SIDE PANEL	1				
28	Call order desk	. BRACKET	1				P
29	Call order desk	. HOLE PLUG 1 1/4"	2				P
30	Call order desk	. SCREW TP PAN PH #8x1/2	4				P
33	871273	. DRAIN PAN	1				
34	Call order desk	. INSERT / DRAIN PAN	1				P
35	Call order desk	. FOAM / 1/8"	1				P
36	Call order desk	. FOAM / 1/8"	1				P
37	N8890509	. SCREW MA PAN PH #10-32x3/4 ZP	4				
38	Call order desk	. SCREW CAP HEX 1/4-20x3/4	4				P
39	N8892465	. WASHER LO SPT 1/4	4				
40	Call order desk	. NUT HEX NYRT #10-32	4				P
41	Call order desk	. SCREW TC CAP HEXW SLT #8-32 X 1/2"	35				P

From Y-7046 To 6-8906		Date:07/2024	PAGE:Y2-2240-20

BLOWER VENTILATION - PARCEL RACK

Item#	Part	Description	XLII 45	XLII MTH40	XLII MTH45	XLII MTH45E	NOTES
42	Call order desk	. NUT SPR U 1 /4-20	4				P
43	N8889679	. FOAM / 3/16"x1 /2"	AR				
44	Call order desk	. FOAM / 1/16"x5"	AR				P
45	Call order desk	. FOAM / 1/2"x1/2"	AR				P
48	453493	HOSE ASSY / #6 245MM	1				
. NS	507278	. O-RING / ORS FITTING / #4 NEO	2				
48	455253	HOSE ASSY / #6 260MM	1				S
. NS	507278	. O-RING / ORS FITTING / #4 NEO	2				S
49	453492	HOSE ASSY / #10 250MM	1				
. NS	507344	. O-RING / ORS FITTING / #10 NEO	2				
49	455252	HOSE ASSY / #10 214MM	1				S
. NS	507344	. O-RING / ORS FITTING / #10 NEO	2				S
50	453800	HOSE 1/2" I.D. X 560MM From 4-8228	1				C
50	453801	HOSE 1/2" I.D. x 380MM From 4-8228	1				ST
50	503707	HOSE / PVC REINFORCED 1/2" I.D. 100' / S.L. From 4-8228	AR				
51	453495	HOSE 1/2" I.D. X 3800MM To 4-8227	1				
51	453802	HOSE 1/2" I.D. x 3400MM From 4-8228	1				
51	503707	. HOSE / PVC REINFORCED 1/2" I.D. 100' / S.L.	AR				
52	504230	HOSE CLAMP / 3/8"-7/8" SS / HS-6	2				
53	5011230	UNION ELBOW 90º / HOSE BARB FITTING / #8x#8 PLAS	1				
54	504013	TIE MOUNT / 1/4" X 1/4" I.D.	AR				
54	504273	CABLE TIE / 1/8" X 3"1/2	AR				
54	504118	RIVET POP DOME OE 3/16x3/8 AL	AR				
60	**Y2-2245-30**	**A/C AUXILIARY LINE / PARCEL RACK To 3-8164**					
60	**Y2-2245-31**	**A/C AUXILIARY LINE / PARCEL RACK From 4-8165**					
		C) CURB SIDE					
		S) SERVICE					
		ST) SERVICE STREET SIDE					
		P) CALL ORDER DESK FOR SPECIFIC APPLICATION (V.I.N.)					

From Y-7046 To 6-8906		Date:07/2024	PAGE:Y2-2240-25
BLOWER ASSY - PARCEL RACK			

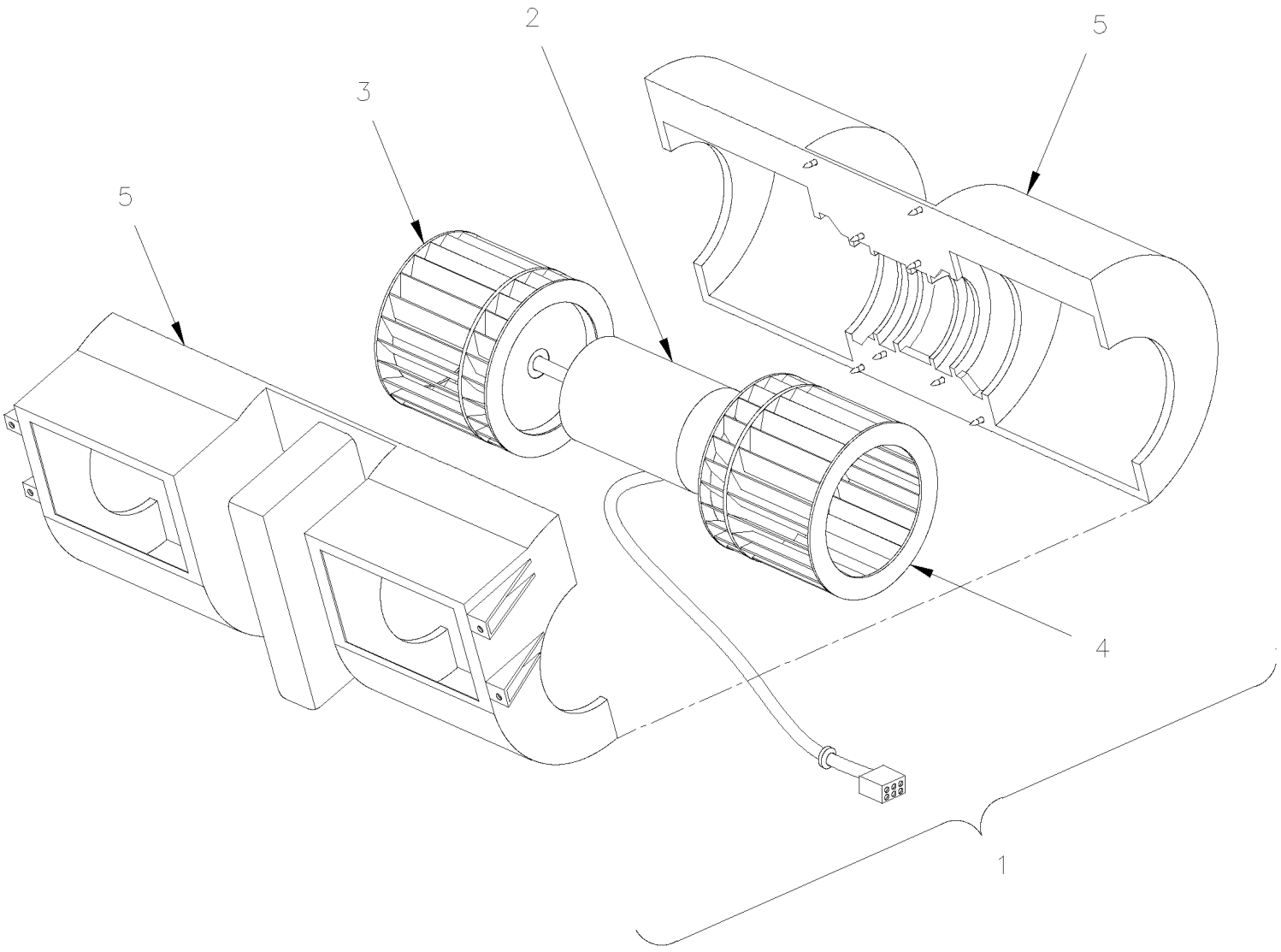

From Y-7046 To 6-8906		Date:07/2024	PAGE:Y2-2240-25

BLOWER ASSY - PARCEL RACK

Item#	Part	Description	XLII 45	XLII MTH40	XLII MTH45	XLII MTH45E	NOTES
1	871157	BLOWER ASSY 24V	2				
2	N.P.N.	. MOTOR 24V	1				4
3	N.P.N.	. BLOWER WHEEL	1				4
4	N.P.N.	. BLOWER WHEEL	1				4
5	N.P.N.	. HOUSING	1				4
		4) NO PARTS NUMBER					

From Y-7046 To 8-9339		Date:07/2024	PAGE:Y2-2245-00
A/C COMPRESSOR 05G - INSTALLATION			

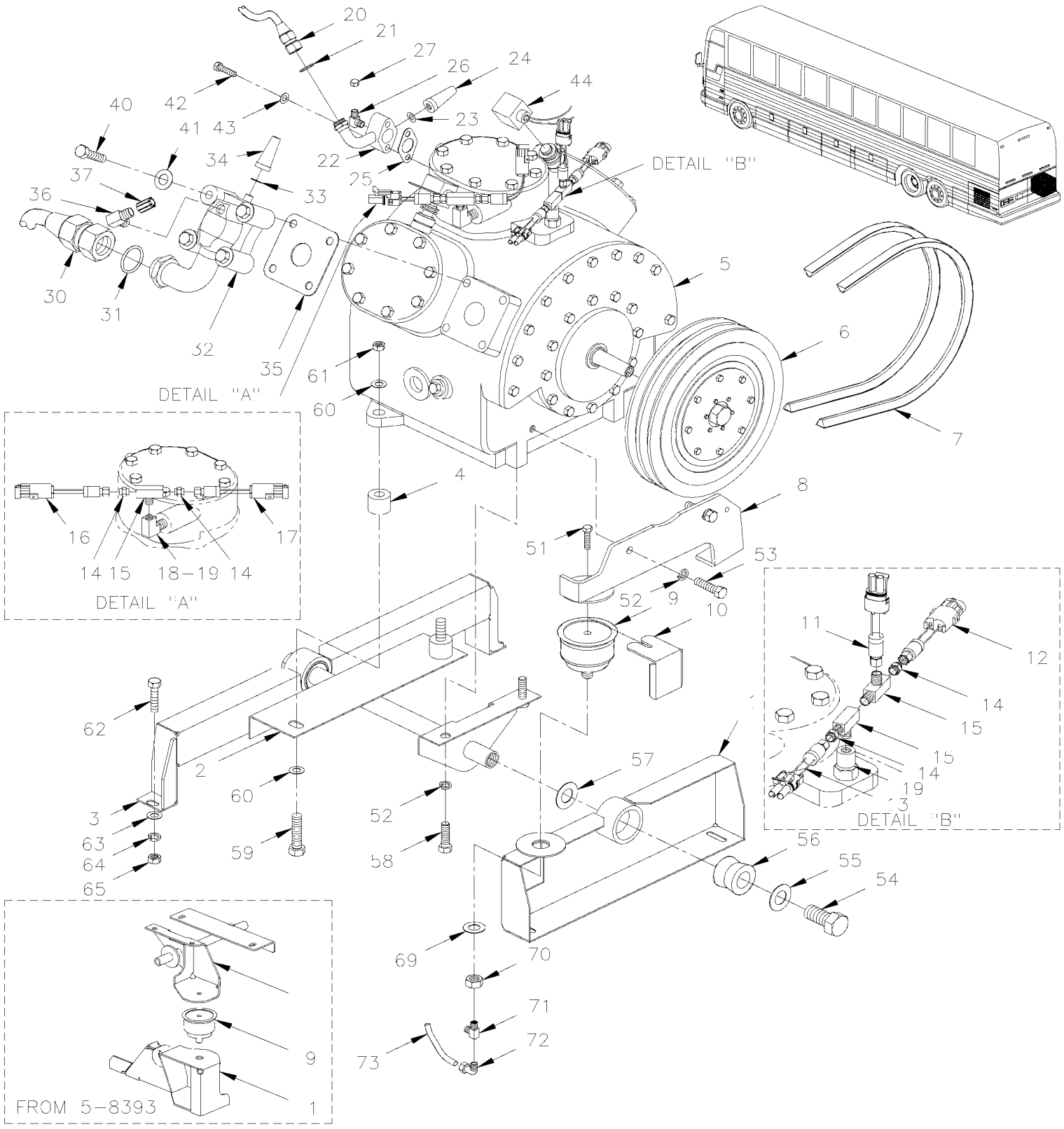

From Y-7046 To 8-9339		Date:07/2024	PAGE:Y2-2245-00

A/C COMPRESSOR 05G - INSTALLATION

Item#	Part	Description	XLII 45	XLII MTH40	XLII MTH45	XLII MTH45E	NOTES
1	453041	SUPPORT ASSY To 2-7809	1	1	1	1	
1	451082	SUPPORT ASSY From 2-7810 To 4-8197	1	1	1	1	
1	453655	SUPPORT ASSY From 4-8198 To 4-8358	1	1	1	1	
1	454190	SUPPORT ASSY From 5-8359	1	1	1	1	
2	452733	SUPPORT ASSY To 2-7809	1	1	1	1	
2	451086	SUPPORT ASSY From 2-7810 To 4-8197	1	1	1	1	
2	453656	SUPPORT ASSY From 4-8198 To 4-8358	1	1	1	1	
2	453651	SUPPORT ASSY From 5-8359	1	1	1	1	
3	453312	SUPPORT ASSY / W/60 To 2-7809	1				
3	451073	SUPPORT ASSY / W/60 From 2-7810	1				
3	452732	SUPPORT ASSY / W/60 To 2-7809		1	1	1	
3	451053	SUPPORT ASSY / W/60 From 2-7810 To 4-8197		1	1	1	
3	453649	SUPPORT OPPOSITE PULLEY SIDE W/60 From 4-8198	1	1	1	1	
4	452268	SLEEVE SPACER	2	2	2	2	
5	**Y2-2250-00**	**A/C COMPRESSOR ASSY 05G - THREE PORT To 6-8795**	1	1	1	1	
5	**Y2-2250-01**	**A/C COMPRESSOR ASSY 05G - TWIN PORT From 6-8796**	1	1	1	1	
6	**Y2-2246-00**	**A/C CLUTCH 05G - HOUSING MOUNTED**					
7	506664	V-BELT / BX-97 / SET OF 2 9212-0390		1	1	1	
7	506681	V-BELT / BX-100 9013-2100	1				
8	453040	TENSIONER FOR BELLOW To 2-7809	1	1	1	1	
8	452050	TENSIONER FOR BELLOW From 2-7810 To 4-8197	1	1	1	1	
8	453647	TENSIONER FOR BELLOW From 4-8198 To 4-8358	1	1	1	1	
9	950208	BELLOW ASSY / BELT TENSIONER / 3" O.D. To 4-8358	1	1	1	1	
. NS	504695	. HOSE CLAMP STEPLESS SPRING SS / OETIKER / 2.9-3.3 To 4-8358	1	1	1	1	
9	550840	BELLOW ASSY / BELT TENSIONER / 4" O.D. From 5-8359	1	1	1	1	
10	453059	BELLOW PROTECTOR To 4-8358	1	1	1	1	
11	950246	PRESSURE SWITCH N.C. 25-37 LO-UNLOAD W/WIRE BLACK	1	1	1	1	
12	452831	PRESSURE SWITCH N.O. 30-5 20SP001MA030C005C	1	1	1	1	
13	950245	PRESSURE SWITCH N.C. 20-30 LO-UNLOAD W/WIRE BLACK	1	1	1	1	
14	950249	SCHRADER VALVE 1/4NPT-M	1	1	1	1	
15	501894	MALE BRANCHE TEE / PIPE FITTING / 1/4NPT-Fx1/4NPT-Fx1/4NPT-M BR	1	1	1	1	
NS	501338	MALE RUN TEE / PIPE FITTING / 1/4NPT-Mx1/4NPT-Fx1/4NPT-F BR	1	1	1	1	
16	453380	PRESSURE SWITCH N.C. 350-245 20PS001MB350K245R	1	1	1	1	
17	452421	PRESSURE SWITCH N.O. 280-220 20SP001MA280K220R	1	1	1	1	
17	950250	HARNESS CABLE ASSY / SWITCHES & CLUTCH	1	1	1	1	
18	501332	STREET ELBOW 90º / PIPE FITTING / 1/4NPT-Mx1/4NPT-F BR	1	1	1	1	
19	5011184	FEMALE CONNECTOR / PIPE @ ORB / 1/4NPT-Fx#4ORB-M STL	AR	AR	AR	AR	
20	452625	HOSE ASSY / DISCHARGE W/R-134a / #16 485MM To Y-7143		1	1	1	
20	453571	HOSE ASSY / DISCHARGE W/R-134a / #16 485MM From Y-7144 To 1-7560		1	1	1	
20	453718	HOSE ASSY / DISCHARGE W/R-134a / #16 583MM / SS BELLOW From 1-7561		1	1	1	
20	452725	HOSE ASSY / DISCHARGE W/R-134a / #16 630MM To Y-7143	1				
20	453572	HOSE ASSY / DISCHARGE W/R-134a / #16 630MM From Y-7144 To 1-7560	1				

From Y-7046 To 8-9339		Date:07/2024	PAGE:Y2-2245-00

A/C COMPRESSOR 05G - INSTALLATION

Item#	Part	Description	XLII 45	XLII MTH40	XLII MTH45	XLII MTH45E	NOTES
20	453719	HOSE ASSY / DISCHARGE W/R-134a / #16 737MM / SS BELLOW From 1-7561	1				
20	505182	. COIL PROTECTOR / PLASTIC / #16	AR	AR	AR	AR	
21	501802	O-RING / ORS FITTING / #16 NEO	2	2	2	2	
22	950267	VALVE ASSY / DISCHARGE / W/R134A	1	1	1	1	
22	950281	VALVE ASSY / DISCHARGE / W/R134A	1	1	1	1	
23	870751	. GASKET	1	1	1	1	
24	870752	. GASKET, CAP SEAL	1	1	1	1	
25	870753	GASKET / DISCHARGE VALVE	1	1	1	1	
26	5011133	ELBOW 90° 1/8 NPT X M15 / W/R134A	1	1	1	1	
NS	5011134	GAUGE ADAPTOR ASSY M15 / W/BLACK CAP W/R134A	1	1	1	1	
27	950287	SCHROUDER CAP / HIGH PRESSURE	1	1	1	1	
28	5011184	FEMALE CONNECTOR / PIPE @ ORB / 1/4NPT-Fx#4ORB-M STL	AR	AR	AR	AR	
30	452528	HOSE ASSY / SUCTION W/R-134a / #20 1040MM	1				
30	453353	HOSE ASSY / SUCTION W/R-134a / #20 1100MM To 7-9095		1	1	1	
30	454304	HOSE ASSY / SUCTION W/R-134a / #20 1000MM From 7-9096		1	1	1	
31	501803	O-RING / ORS FITTING / #20 NEO	2	2	2	2	
32	950265	VALVE ASSY / SUCTION / W/R134A	1	1	1	1	
33	870751	. GASKET	1	1	1	1	
34	870752	. GASKET, CAP SEAL	1	1	1	1	
35	870754	GASKET / SUCTION VALVE	1	1	1	1	
36	5011131	ELBOW 90° 1/4 NPT X M13 / W/R134A	1	1	1	1	
NS	5011132	GAUGE ADAPTOR ASSY M13 / W/BLACK CAP W/R134A	1	1	1	1	
37	950288	SCHROUDER CAP / LOW PRESSURE	1	1	1	1	
40	870755	SCREW CAP HEX 1/2-13x2 1/2 G5 ZP	4	4	4	4	
41	870756	GASKET	4	4	4	4	
42	870877	SCREW CAP HEX 5/16-18x2 G5 ZP	2	2	2	2	
43	870750	GASKET	2	2	2	2	
44	**Y2-2250-15**	**A/C ELECTRIC UNLOADER - W/05G COMPRESSOR**					
45	501037	MALE ELBOW 90º / SAE 45º FITTING / #4FL-Mx1/4NPT-M BR	1	1	1	1	
NS	5011184	FEMALE CONNECTOR / PIPE @ ORB / 1/4NPT-Fx#4ORB-M STL	AR	AR	AR	AR	
51	500845	SCREW CAP HEX 5/16-18x1/2 G5 Z050 To 4-8358	1	1	1	1	
51	502926	SCREW CAP HEX 3/8-16x7/8 G5 N500 From 5-8359	1	1	1	1	
NS	500832	WASHER FL .406x.812x.065 N500 From 5-8359	1	1	1	1	
52	500478	WASHER LO SPT .380x.683x.094 Z050 To 4-8358	2	2	2	2	
53	500191	SCREW CAP HEX 3/8-16x1 G5 Z050 To 4-8358	2	2	2	2	
54	500225	SCREW CAP HEX 5/8-11x1 G5 Z050	2	2	2	2	
55	5001151	WASHER CON 16.5x50.0x4.5 ZP	2	2	2	2	
56	630062	BUSHING / RUBBER / (ONE PIECE) 2" x 1.005" I.D.	2	2	2	2	
57	500997	WASHER FL 1.062x2.500x.125 SS	2	2	2	2	
58	500192	SCREW CAP HEX 3/8-16x1 1/4 G5 Z050	2	2	2	2	
59	500096	SCREW CAP HEX 1/2-20x3 G5 Z050	2	2	2	2	
60	500446	WASHER FL .531x1.250x.125 Z050	4	4	4	4	

From Y-7046 To 8-9339		Date:07/2024	PAGE:Y2-2245-00

A/C COMPRESSOR 05G - INSTALLATION

Item#	Part	Description	XLII 45	XLII MTH40	XLII MTH45	XLII MTH45E	NOTES
61	500718	NUT HEX STO 1/2-20 Z050	2	2	2	2	
62	502549	SCREW CAP HEX M10-1.5x35 G8.8 Z050	5	5	5	5	
63	500445	WASHER FL .437x1.000x.083 Z050	5	5	5	5	
64	502616	WASHER LO SPT 10.2x18.1x2.2 SS	5	5	5	5	
65	500680	NUT HEX STO M10-1.5 Z050	5	5	5	5	
69	5001150	WASHER FL 17.0x30.0x3.0 N500 To 4-8358	1	1	1	1	
69	500218	WASHER LO SPT .380x.683x.098 DP320 From 5-8359	1	1	1	1	
70	500792	NUT HEX 5/8-11 Z050 To 4-8358	1	1	1	1	
70	502917	NUT HEX JAM 3/4-16 G2 N500 From 5-8359	1	1	1	1	
71	501707	ADAPTER TEE / SAE 45º FITTING / #4FL-Mx1/8NPT-Mx1/8NPT-F BR	1	1	1	1	
72	641369	MALE ELBOW 90° NON-SWIVEL / PUSH-IN FITTING / #4x1/8NPT-M BR	1	1	1	1	
73	503402	TUBE, NYLON 1/4 O.D. / BLACK S.L.	AR	AR	AR	AR	

From Y-7046 To 7-9095		Date:07/2024	PAGE:Y2-2245-01
A/C COMPRESSOR "ROTOVANE" - INSTALLATION			

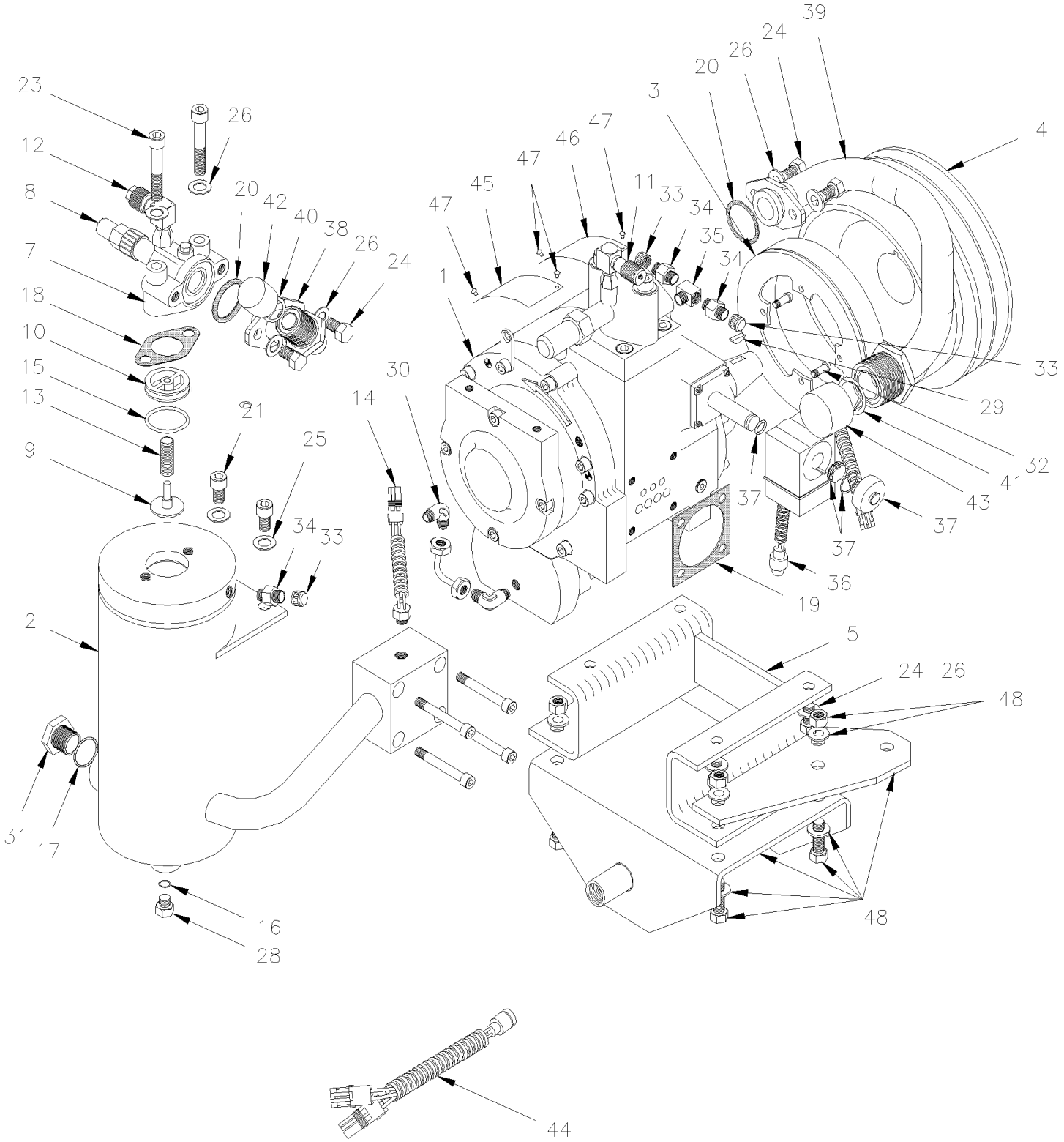

From Y-7046 To 7-9095		Date:07/2024	PAGE:Y2-2245-01

A/C COMPRESSOR "ROTOVANE" - INSTALLATION

Item#	Part	Description	XLII 45	XLII MTH40	XLII MTH45	XLII MTH45E	NOTES
1	950331	A/C COMPRESSOR ASSY "ROTO-VANE"	1				
2	950337	. OIL SEPARATOR ASSY	1				
3	950338	. CLUTCH COIL 24V ASSY	1				
4	950339	. CLUTCH PULLEY ASSY	1				
5	950340	. STAND	1				
6	950341	. OIL LINE ASSY	1				
7	950342	. VALVE - SHUT OFF	1				
8	950343	. VALVE STEM CAP	1				
9	950344	. VALVE - DISHARGE - NON RETURN	1				
10	950345	. VALVE BRIDGE - DISCHARGE	1				
11	950346	. LOW PRESSURE ADAPTOR HFC-134A-90°	1				
12	950347	. HIGH PRESSURE ADAPTOR HFC-134A-90°	1				
13	950348	. SPRING - NON RETURN VALVE	1				
14	950349	. TEMPERATURE SWITCH	1				
15	950350	. O-RING NO.2-220 - VITON V0747	1				
16	950351	. O-RING NO.3-906 - VITON V0747	1				
17	950352	. O-RING NO. -024 - TEFLON Z1415-95	1				
18	950354	. GASKET - FLANGE	1				
19	950353	. GASKET - DISCHARGE MANIFOLD	1				
20	950355	. GASKET - 42 O.D. X 35 I.D.	2				
21	502755	. SCREW CAP HEXS M8-1.25x20 PT Z050	2				
22	70314704	. SCREW CAP HEXS M8-1.25X50 G8.8 ZP	4				
23	70314705	. SCREW CAP HEXS M10-1.5x60 G8.8 ZP	2				
24	N.P.N.	. HEX. CAP SCREW (M10X1.5) X 20	8				4
25	N.P.N.	. WASHER - PLAIN M8	2				4
26	N.P.N.	. WASHER - PLAIN M10	10				4
27	N.P.N.	. PLUG 1/8" NPT	1				4
28	N.P.N.	. PLUG 9/16" - 18	1				4
29	950356	. KEY - WOODRUFF 5 X 6.5	1				
30	N.P.N.	. ELBOW 1/4" X 1/8" NPT	2				4
31	950357	. SIGHTGLASS 1-1/8" UNEF	1				
32	70314706	. SCREW MA PAN PH M6-1.0x10 ZP	4				
33	N.P.N.	. PLASTIC CAP	3				4
34	950030	. SCHRADER VALVE 1/8NPT-M	3				
35	N.P.N.	. PIPE FITTING TEE 1/8" NPT	1				4
36	950359	. SOLENOID COIL 24V ASSY	1				
37	950360	. SEAL KIT	1				
38	950361	. DISCHARGE TUBE ASSY	1				
39	950362	. SUCTION TUBE ASSY	1				
40	950363	. O-RING	1				
41	950364	. O-RING	1				
42	N.P.N.	. PLASTIC CAP TS-16	1				4

From Y-7046 To 7-9095		Date:07/2024	PAGE:Y2-2245-01

A/C COMPRESSOR "ROTOVANE" - INSTALLATION

Item#	Part	Description	XLII 45	XLII MTH40	XLII MTH45	XLII MTH45E	NOTES
43	N.P.N.	. PLASTIC CAP TS-20	1				4
44	950365	. WIRING HARNESS	1				
45	N.P.N.	. LABEL - PART NO.	1				4
46	N.P.N.	. LABEL - ALUMINUM	1				4
47	5001197	. SCREW DRV RND #4x1/4 ZP	4				
48	950366	. MOUNTING BASE - KIT	1				
		4) NO PARTS NUMBER					

From 7-9096 To 8-9339		Date:07/2024	PAGE:Y2-2245-03
A/C COMPRESSOR 05G - INSTALLATION - MUX			

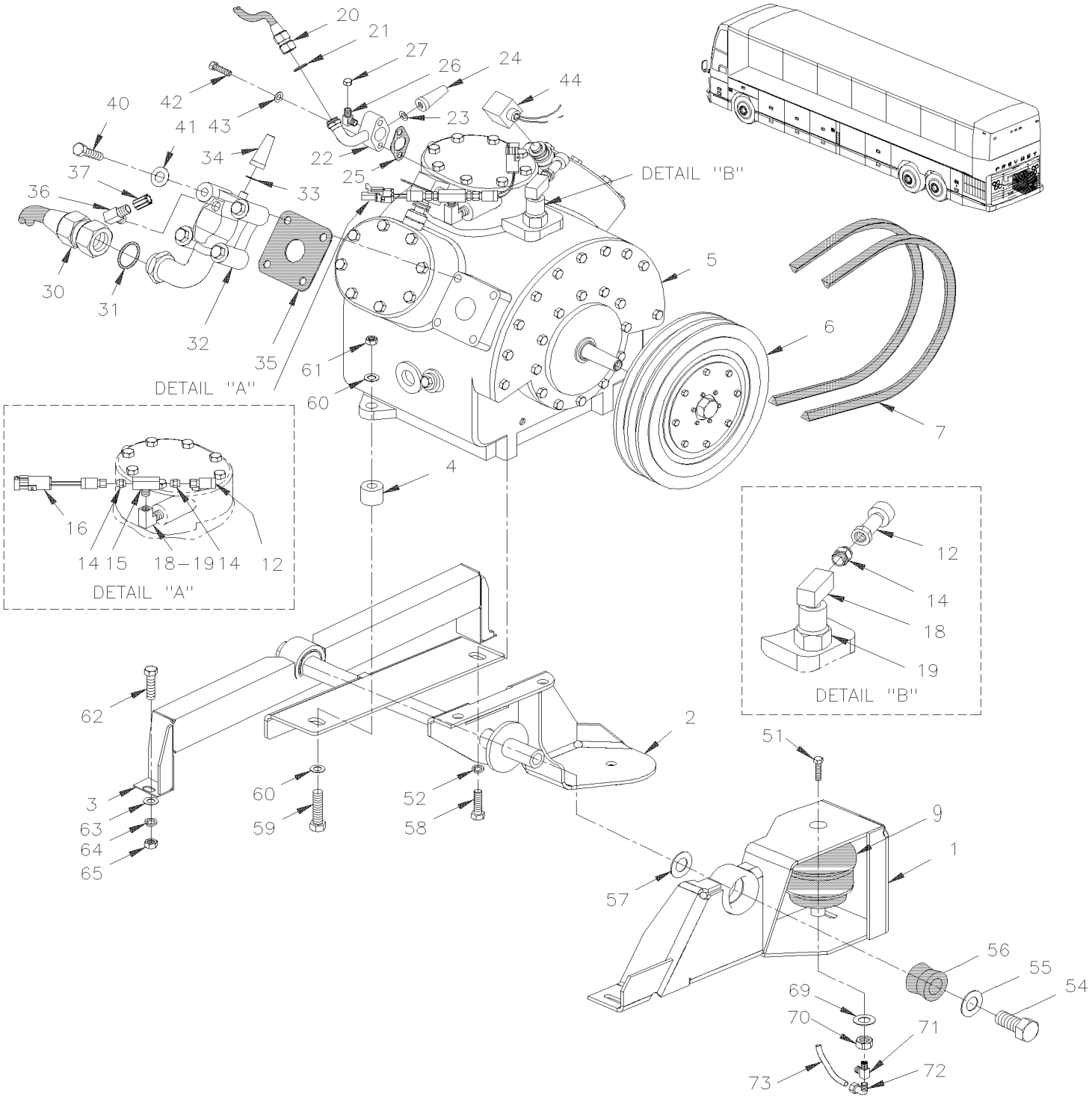

From 7-9096 To 8-9339		Date:07/2024	PAGE:Y2-2245-03

A/C COMPRESSOR 05G - INSTALLATION - MUX

Item#	Part	Description	XLII 45	XLII MTH40	XLII MTH45	XLII MTH45E	NOTES
1	454190	SUPPORT ASSY			1	1	
2	453651	SUPPORT ASSY			1	1	
3	453649	SUPPORT OPPOSITE PULLEY SIDE W/60			1	1	
4	452268	SLEEVE SPACER			2	2	
5	**Y2-2250-00**	**A/C COMPRESSOR ASSY 05G - THREE PORT**					
6	**Y2-2246-00**	**A/C CLUTCH 05G - HOUSING MOUNTED**					
7	506864	V-BELT / BX-100 / SET OF 2 9212-0404			1	1	
7	506681	V-BELT / BX-100 9013-2100			AR	AR	
9	550840	BELLOW ASSY / BELT TENSIONER / 4" O.D.			1	1	
11	950246	PRESSURE SWITCH N.C. 25-37 LO-UNLOAD W/WIRE BLACK			1	1	
12	563423	TRANSDUSER -6.7 to 420 LBS / 1/8 NPT-F			2	2	
. NS	563159	. CONNECTOR / METRI-PACK 150 / SH 3C / PED 12065287			1	1	
13	950245	PRESSURE SWITCH N.C. 20-30 LO-UNLOAD W/WIRE BLACK			1	1	
NS	501338	MALE RUN TEE / PIPE FITTING / 1/4NPT-Mx1/4NPT-Fx1/4NPT-F BR			1	1	
14	950249	SCHRADER VALVE 1/4NPT-M			1	1	
15	501894	MALE BRANCHE TEE / PIPE FITTING / 1/4NPT-Fx1/4NPT-Fx1/4NPT-M BR			1	1	
16	453380	PRESSURE SWITCH N.C. 350-245 20PS001MB350K245R			1	1	
18	501332	STREET ELBOW 90º / PIPE FITTING / 1/4NPT-Mx1/4NPT-F BR			1	1	
19	5011184	FEMALE CONNECTOR / PIPE @ ORB / 1/4NPT-Fx#4ORB-M STL			AR	AR	
20	454275	HOSE ASSY / DISCHARGE W/R-134a / #16 687MM / SS BELLOW			1	1	
21	507345	O-RING / ORS FITTING / #16 NEO			2	2	
22	950378	VALVE ASSY / DISCHARGE / W/R134A			1	1	
23	870751	. GASKET			1	1	
24	870752	. GASKET, CAP SEAL			1	1	
25	870753	GASKET / DISCHARGE VALVE			1	1	
26	5011133	ELBOW 90° 1/8 NPT X M15 / W/R134A			1	1	
NS	5011134	GAUGE ADAPTOR ASSY M15 / W/BLACK CAP W/R134A			1	1	
27	950287	SCHROUDER CAP / HIGH PRESSURE			1	1	
30	454304	HOSE ASSY / SUCTION W/R-134a / #20 1000MM			1	1	
31	507346	O-RING / ORS FITTING / #24 NEO			2	2	
32	950264	VALVE ASSY / SUCTION / W/R134A			1	1	
33	870751	. GASKET			1	1	
34	870752	. GASKET, CAP SEAL			1	1	
35	870754	GASKET / SUCTION VALVE			1	1	
36	5011131	ELBOW 90° 1/4 NPT X M13 / W/R134A			1	1	
NS	5011132	GAUGE ADAPTOR ASSY M13 / W/BLACK CAP W/R134A			1	1	
37	950288	SCHROUDER CAP / LOW PRESSURE			1	1	
40	870755	SCREW CAP HEX 1/2-13x2 1/2 G5 ZP			4	4	
41	870756	GASKET			4	4	
42	870877	SCREW CAP HEX 5/16-18x2 G5 ZP			2	2	
43	870750	GASKET			2	2	
44	**Y2-2250-15**	**A/C ELECTRIC UNLOADER - W/05G COMPRESSOR**					

From 7-9096 To 8-9339		Date:07/2024	PAGE:Y2-2245-03

A/C COMPRESSOR 05G - INSTALLATION - MUX

Item#	Part	Description	XLII 45	XLII MTH40	XLII MTH45	XLII MTH45E	NOTES
45	501037	MALE ELBOW 90º / SAE 45º FITTING / #4FL-Mx1/4NPT-M BR			1	1	
NS	5011184	FEMALE CONNECTOR / PIPE @ ORB / 1/4NPT-Fx#4ORB-M STL			AR	AR	
51	502926	SCREW CAP HEX 3/8-16x7/8 G5 N500			1	1	
NS	500832	WASHER FL .406x.812x.065 N500			1	1	
52	500478	WASHER LO SPT .380x.683x.094 Z050			4	4	
54	500225	SCREW CAP HEX 5/8-11x1 G5 Z050			2	2	
55	5001151	WASHER CON 16.5x50.0x4.5 ZP			2	2	
56	630062	BUSHING / RUBBER / (ONE PIECE) 2" x 1.005" I.D.			2	2	
57	500997	WASHER FL 1.062x2.500x.125 SS			2	2	
58	500192	SCREW CAP HEX 3/8-16x1 1/4 G5 Z050			2	2	
59	500096	SCREW CAP HEX 1/2-20x3 G5 Z050			2	2	
60	500446	WASHER FL .531x1.250x.125 Z050			4	4	
61	500718	NUT HEX STO 1/2-20 Z050			2	2	
62	502549	SCREW CAP HEX M10-1.5x35 G8.8 Z050			5	5	
63	500445	WASHER FL .437x1.000x.083 Z050			5	5	
64	502616	WASHER LO SPT 10.2x18.1x2.2 SS			5	5	
65	500680	NUT HEX STO M10-1.5 Z050			5	5	
69	5001150	WASHER FL 17.0x30.0x3.0 N500			1	1	
69	500218	WASHER LO SPT .380x.683x.098 DP320			1	1	
70	500792	NUT HEX 5/8-11 Z050			1	1	
70	502917	NUT HEX JAM 3/4-16 G2 N500			1	1	
71	501707	ADAPTER TEE / SAE 45º FITTING / #4FL-Mx1/8NPT-Mx1/8NPT-F BR			1	1	
72	641369	MALE ELBOW 90° NON-SWIVEL / PUSH-IN FITTING / #4x1/8NPT-M BR			1	1	
73	503402	TUBE, NYLON 1/4 O.D. / BLACK S.L.			AR	AR	

From Y-7046 To 3-8164		Date:07/2024	PAGE:Y2-2245-10
A/C COMPRESSOR SMALL - INSTALLATION			

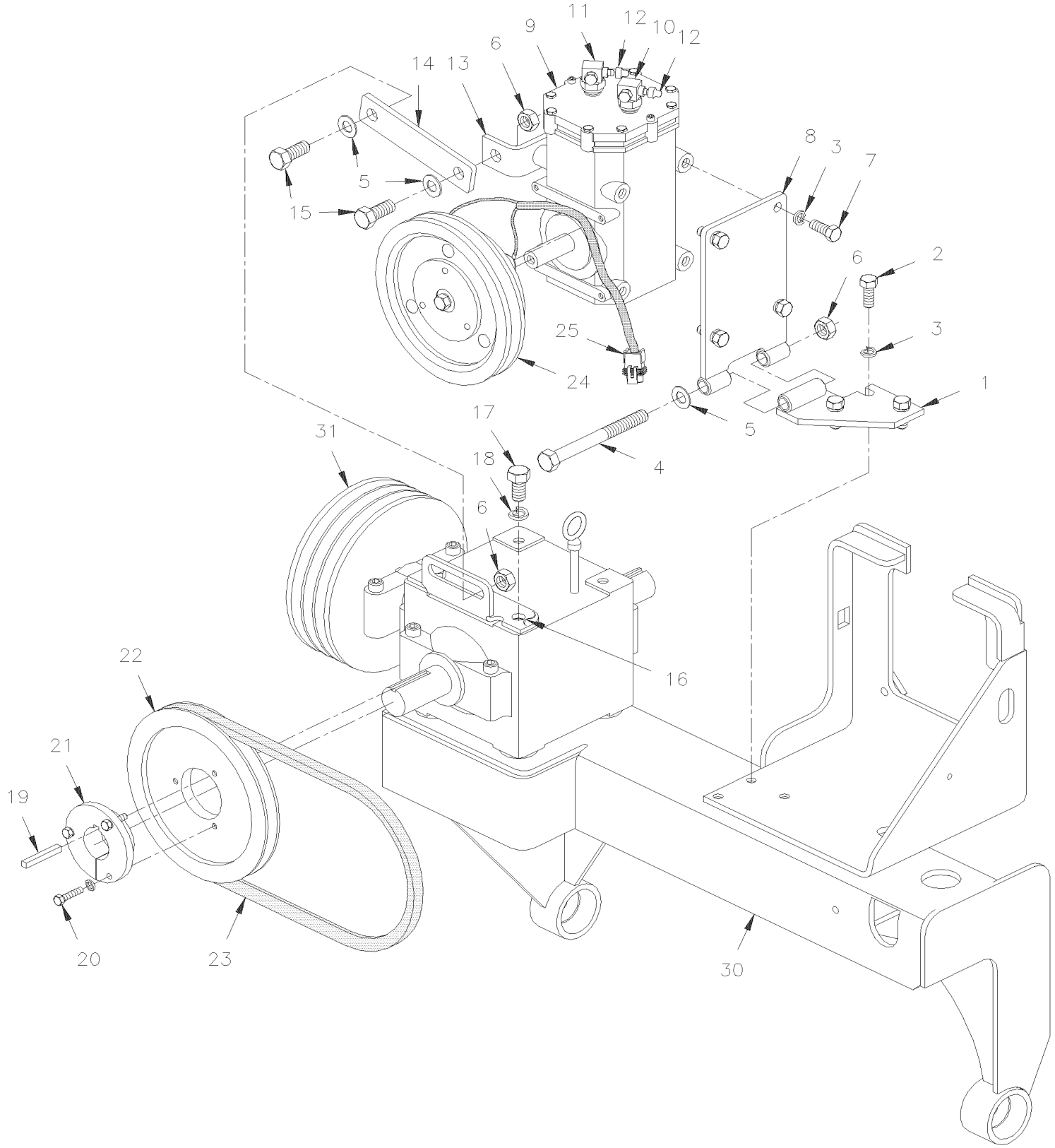

From Y-7046 To 3-8164		Date:07/2024	PAGE:Y2-2245-10

A/C COMPRESSOR SMALL - INSTALLATION

Item#	Part	Description	XLII 45	XLII MTH40	XLII MTH45	XLII MTH45E	NOTES
1	452444	PIVOT ASSY / SUPPORT	1	1	1	1	
2	502559	SCREW CAP HEX M10-1.5x25 G8.8 Z050	3	3	3	3	
3	500257	WASHER LO SPT 10.2x18.1x2.2 Z050	9	9	9	9	
4	500105	SCREW CAP HEX 1/2-20x5 1/2 G5 ZP	1	1	1	1	
5	571351	WASHER, 1/2" I.D. FLAT	5	5	5	5	
6	500718	NUT HEX STO 1/2-20 Z050	5	5	5	5	
7	500191	SCREW CAP HEX 3/8-16x1 G5 Z050	6	6	6	6	
8	452471	PIVOT ASSY / COMPRESSOR	1	1	1	1	
9	950219	A/C COMPRESSOR ASSY "TECUMSEH" / R-134A	1	1	1	1	
9	950393	A/C COMPRESSOR ASSY "CCI" / R-134A	1	1	1	1	S
9	950487	KEY / SHAFT	1	1	1	1	
10	950076	VALVE ASSY / DISCHARGE / W/O-RING 1/2" / W/"TECUMSEH" COMPRESSOR	1	1	1	1	
10	950235	GAUGE ADAPTOR ASSY / W/BLUE CAP FOR R-134A / SUCTION SIDE (ALUMINUM)	1	1	1	1	
NS	950368	ADAPTOR FITTING / O-RING PORT TO ROTOLOCK	2	2	2	2	A
NS	950369	SEAL TEFLON / O-RING PORT TO ROTOLOCK	2	2	2	2	A
NS	950383	SEAL TEFLON / O-RING PORT TO ROTOLOCK	2	2	2	2	A
11	950077	VALVE ASSY / SUCTION / W/O-RING 5/8" / W/"TECUMSEH" COMPRESSOR	1	1	1	1	
11	950234	GAUGE ADAPTOR ASSY / W/RED CAP FOR R-134A / DISCHARGE SIDE (ALUMINUM)	1	1	1	1	
12	950157	. CAP VALVE / PROTECTOR / STEEL	1	1	1	1	
13	453122	TENSIONNER SUPPORT	1	1	1	1	
14	452442	TENSIONNER	2	2	2	2	
15	500086	SCREW CAP HEX 1/2-20x1 1/4 G5 Z050	4	4	4	4	
16	452443	TENSIONER BRACKET / GEARBOX	2	2	2	2	
17	500213	SCREW CAP HEX 1/2-13x1 G5 Z050	4	4	4	4	
18	500482	WASHER LO SPT .506x.873x.125 Z050	4	4	4	4	
19	550186	KEY 1/4" X 1/4" X 1 1/4"	1	1	1	1	
20	500167	SCREW CAP HEX 1/4-20x1 1/4 G5 PT Z050	3	3	3	3	
NS	500473	WASHER LO SPT .262x.489x.062 Z050	3	3	3	3	
21	950230	CONE BUSHING 1 1/4 I.D X 2 1/8 O.D. X 3 5/16	1	1	1	1	
22	950211	PULLEY DRIVE 7.15 O.D. / SINGLE "V"	1	1	1	1	
23	506685	V-BELT / A-35 9002-2035	1	1	1	1	
24	950079	PULLEY ASSY W/COIL 24V	1	1	1	1	
25	561566	CONNECTOR / WEATHER PACK / PH 2C / BLACK / PED 12010973	1	1	1	1	
NS	561568	PIN TERMINAL / 16-14 / PED 12089305	2	2	2	2	
NS	561565	CABLE SEAL / GREEN / PED 15324982	2	2	2	2	
30	**Y2-0520-00**	**FAN DRIVE - INSTALLATION - SHORT**					
31	**Y2-0520-00**	**FAN DRIVE - INSTALLATION - SHORT**					
NS	451144	OIL DIPSTICK / (REQUIRED TO CHANGE)	1	1	1	1	
NS	454222	KIT, RETROFIT "SELTEC" COMPRESSOR / W/MTH 40' To 3-8164		1			C
. NS	IS-04009	. SEE INSTRUCTION SHEET To 3-8164		1			C
NS	454223	KIT, RETROFIT "SELTEC" COMPRESSOR / W/MTH 45' To 3-8164				1	
. NS	IS-04009	. SEE INSTRUCTION SHEET To 3-8164				1	

From Y-7046 To 3-8164		Date:07/2024	PAGE:Y2-2245-10

A/C COMPRESSOR SMALL - INSTALLATION

Item#	Part	Description	XLII 45	XLII MTH40	XLII MTH45	XLII MTH45E	NOTES
NS	454140	KIT, RETROFIT "SELTEC" COMPRESSOR / W/A/C IN PARCEL RACK ONLY To 3-8164	1				B
. NS	IS-03045	. SEE INSTRUCTION SHEET To 3-8164	1				B
NS	453897	KIT, RETROFIT "SELTEC" COMPRESSOR /W/W5 ONLY To 3-8164			1		
. NS	IS-03152	. SEE INSTRUCTION SHEET To 3-8164			1		
		A) SOME COMPRESSOR MODEL REQUIRES ALL THOSES ITEMS TO INSTALL SERVICING VALVE INLET AND OUTLET					
		B) THIS KIT INCLUDES ALL COMPONENTS FOR BUS EQUIPPED WITH A/C IN PARCEL RACK					
		C) THIS KIT INCLUDES ALL COMPONENTS FOR MTH					
		S) SERVICE AFTERMARKET					

From 4-8165 To 8-9339		Date:07/2024	PAGE:Y2-2245-11
A/C COMPRESSOR SMALL - INSTALLATION			

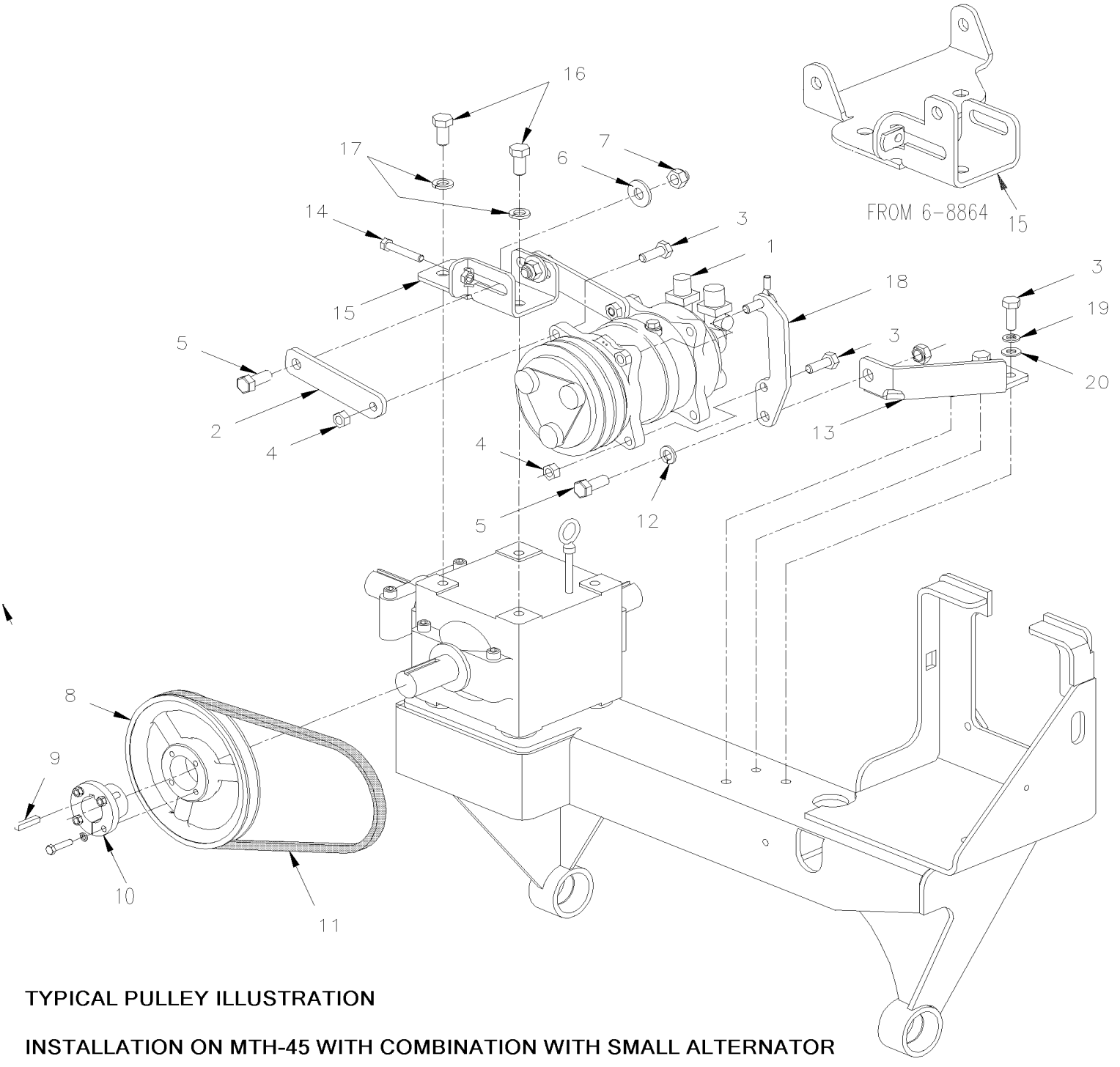

TYPICAL PULLEY ILLUSTRATION

INSTALLATION ON MTH-45 WITH COMBINATION WITH SMALL ALTERNATOR

SEE PAGE Y2-0610-54

From 4-8165 To 8-9339		Date:07/2024	PAGE:Y2-2245-11

A/C COMPRESSOR SMALL - INSTALLATION

Item#	Part	Description	XLII 45	XLII MTH40	XLII MTH45	XLII MTH45E	NOTES
1	950372	A/C COMPRESSOR ASSY "TH16HD"	1	1	1	1	
. NS	950445	. MANIFOLD FITTING 3/4-16 & 7/8-14	1	1	1	1	
2	454060	TENSIONER 116.6MM C/C To 4-8228	2	2	2	2	
2	454143	TENSIONER 122.7MM C/C From 4-8229	2	2		2	
2	454143	TENSIONER 122.7MM C/C From 4-8829 To 6-8863			2		
2	454316	TENSIONER 122.7MM C/C / OFFSET From 6-8864			2		
3	500603	SCREW CAP HEX SLT #10-24x2 Z050	7	7	7	7	
4	5001758	NUT HEX STO M10-1.5 N500	4	4	4	4	
5	970970	SCREW CAP HEX M12-1.75x30 G8.8 ZG603	3	3	3	3	
6	971084	NUT HEX STO M12-1.75 ZG603	2	2	2	2	
7	500211	WASHER FL .531x1.250x.125 N500	2	2	2	2	
8	950374	PULLEY DRIVE 7.25 O.D. / SINGLE "V" To 4-4952	1	1	1	1	
8	950388	PULLEY DRIVE 7.25 O.D. / SINGLE "V" From 4-4953 To 5-8631	1	1	1	1	
8	950392	PULLEY DRIVE 7.25 O.D. / DOUBLE "V" From 5-8632	1	1		1	
8	950392	PULLEY DRIVE 7.25 O.D. / DOUBLE "V" To 6-8863			1		
8	950397	PULLEY DRIVE 7.15 O.D. / TRIPLE "V" From 6-8864			1		
9	550186	KEY 1/4" X 1/4" X 1 1/4"	1	1		1	
9	550186	KEY 1/4" X 1/4" X 1 1/4" To 6-8863			1		
9	550293	KEY 1/4" X 1/4" X 1 13/16" From 6-8864			1		
10	950375	CONE BUSHING 1 1/4 I.D X 2 1/8 O.D. X 3 5/16 To 4-4952	1	1	1	1	
10	950389	CONE BUSHING 1 1/4 I.D X 2 1/8 O.D. X 3 5/16 From 4-4953	1	1		1	
10	950389	CONE BUSHING 1 1/4 I.D X 2 1/8 O.D. X 3 5/16 From 4-4953 To 6-8863			1		
10	950398	CONE BUSHING 1 1/4 I.D X 2 1/8 O.D. X 3 5/16 From 6-8864			1		
11	506685	V-BELT / A-35 9002-2035	2	2	2	2	
12	500747	WASHER LO SPT 12.2x21.1x2.5 N500	1	1	1	1	
13	454057	PIVOT ASSY / SUPPORT To 4-8228	1	1	1	1	
13	454137	PIVOT ASSY / SUPPORT From 4-8229	1	1		1	
13	454137	PIVOT ASSY / SUPPORT From 4-8229 To 6-8863			1		
13	454318	PIVOT ASSY / SUPPORT From 6-8863			1		
14	502757	SCREW CAP HEX M8-1.25x50 G8.8 N500	1	1	1	1	
15	454059	TENSIONNER SUPPORT To 4-8228	1	1	1	1	
15	454127	TENSIONNER SUPPORT From 4-8229	1	1		1	
15	454127	TENSIONNER SUPPORT To 6-8863			1		
15	066496	SUPPORT ALTERNATOR & A/C COMPRESSOR From 6-8864			1		
16	5001565	SCREW CAP HEX 1/2-13x1 G5 N500	2	2	2	2	
17	500944	WASHER LO SPT .506x.873x.125 N500	2	2	2	2	
18	454058	PIVOT ASSY / COMPRESSOR To 4-8228	1	1	1	1	
18	454138	PIVOT ASSY / COMPRESSOR From 4-8229	2	2	2	2	
19	3852496	WASHER LO SPT 10.2x18.1x2.2 ZG603	3	3	3	3	
20	500832	WASHER FL .406x.812x.065 N500	3	3	3	3	
50	**Y2-0610-54**	**ALTERNATOR MOUNTING / "BOSCH" - 24V/140A / GEARBOX INSTAL**					

From Y-7046 To 3-8164		Date:07/2024	PAGE:Y2-2245-30
A/C AUXILIARY LINE / PARCEL RACK			

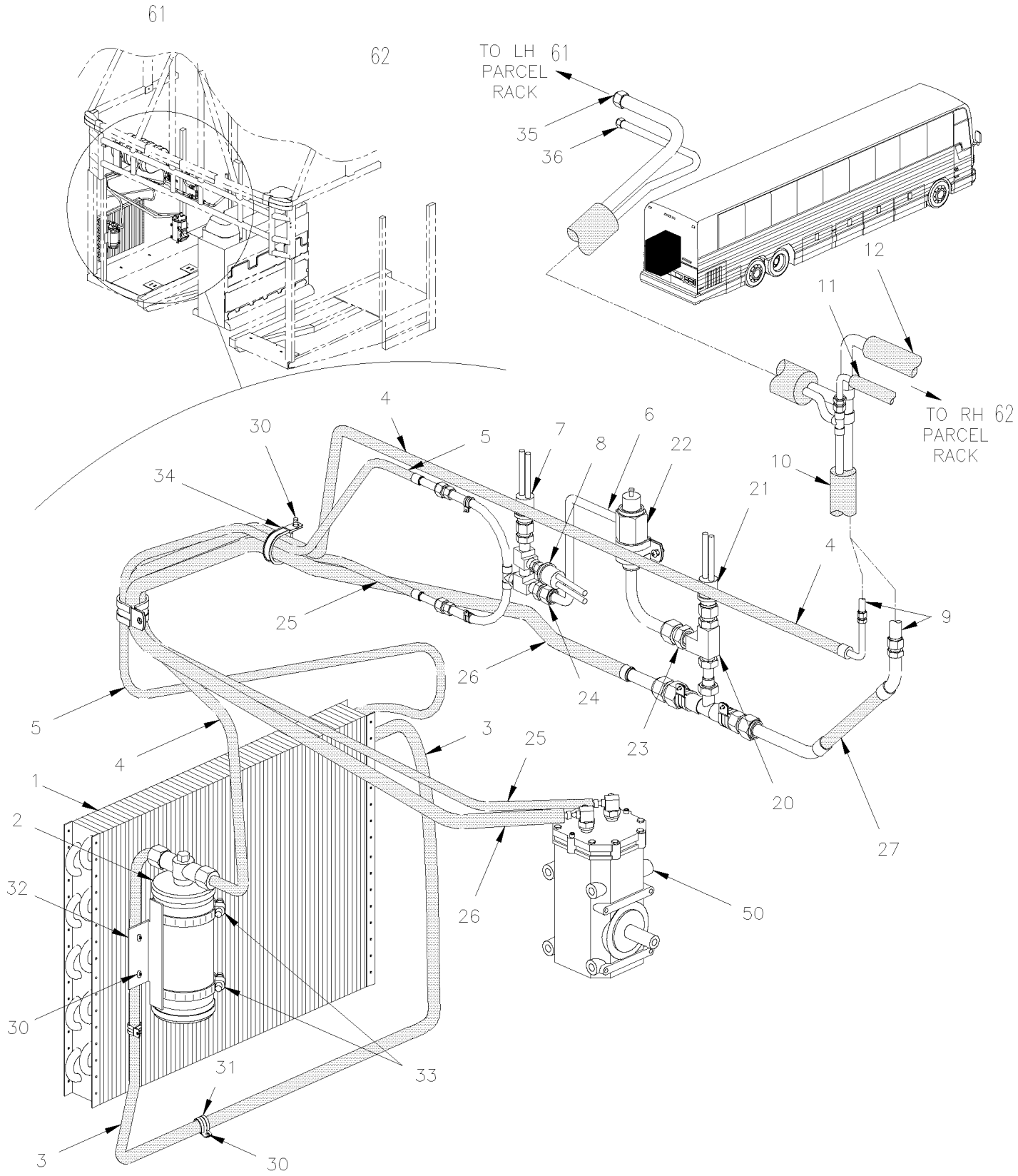

From Y-7046 To 3-8164		Date:07/2024	PAGE:Y2-2245-30

A/C AUXILIARY LINE / PARCEL RACK

Item#	Part	Description	XLII 45	XLII MTH40	XLII MTH45	XLII MTH45E	NOTES
1	950018	CONDENSOR COIL To Y-7367	1				
1	950336	CONDENSOR COIL From Y-7368	1				
1	**IS14130**	**RETROFIT KIT FOR OBSOLETED CONDENSORS 950018 & 950335**	1				
2	950220	DRYER, RECEIVER TANK	1				
3	453449	HOSE ASSY / CONDENSER & RECEIVER / #6 2370MM	1				
. NS	507278	. O-RING / ORS FITTING / #4 NEO	2				
3	455236	HOSE ASSY / CONDENSER & RECEIVER / #6 2370MM	1				S
. NS	507278	. O-RING / ORS FITTING / #4 NEO	2				S
4	453446	HOSE ASSY / DRYER OUTLET / #6 1965MM	1				
. NS	507278	. O-RING / ORS FITTING / #4 NEO	2				
4	455233	HOSE ASSY / DRYER OUTLET / #6 1965MM	1				S
. NS	507278	. O-RING / ORS FITTING / #4 NEO	2				S
5	453450	HOSE ASSY /COND INLET & HI-SIDE / W/R-134a/ #8 1800MM	1				
. NS	507343	. O-RING / ORS FITTING / #8 NEO	2				
5	455237	HOSE ASSY /COND INLET & HI-SIDE / W/R-134a/ #8 1800MM	1				S
. NS	507343	. O-RING / ORS FITTING / #8 NEO	2				S
6	453437	TUBE ASSY / HI&LOW SIDE W/PLATE HOLDER	1				
7	453380	. PRESSURE SWITCH N.C. 350-245 20PS001MB350K245R	1				
8	452832	. PRESSURE SWITCH N.O. 170-130 20SP001MA170J130J	1				
NS	950030	. SCHRADER VALVE 1/8NPT-M	AR				
NS	950249	. SCHRADER VALVE 1/4NPT-M	AR				
9	Call order desk	PIPE ASSY / ENGINE COMPARTMENT & PARCEL RACK	1				P
10	506267	PIPE INSULATING / 1 1/8" I.D. X 1/2" TH. X / APT11812	AR				
11	453455	HOSE ASSY / PIPE & R.H. PARCEL RACK #6 1850MM	1				
. NS	507278	. O-RING / ORS FITTING / #4 NEO	2				
11	455239	HOSE ASSY / PIPE & R.H. PARCEL RACK #6 1850MM	1				S
. NS	507278	. O-RING / ORS FITTING / #4 NEO	2				S
12	453454	HOSE ASSY / #12 1800MM	1				
. NS	507344	. O-RING / ORS FITTING / #10 NEO	1				
. NS	507280	. O-RING / ORS FITTING / #12 NEO	1				
12	455238	HOSE ASSY / #12 1800MM	1				S
. NS	507344	. O-RING / ORS FITTING / #10 NEO	1				S
. NS	507280	. O-RING / ORS FITTING / #12 NEO	1				S
20	453437	TUBE ASSY / HI&LOW SIDE W/PLATE HOLDER To 2-7888	1				
20	453727	TUBE ASSY / HI&LOW SIDE W/PLATE HOLDER From 2-7889	1				
21	452831	. PRESSURE SWITCH N.O. 30-5 20SP001MA030C005C	1				
22	452434	. VALVE, BYPASS ASSY / W/R134A	1				
22	950065	. . BY-PASS VALVE	1				
23	5011080	. MALE CONNECTOR / ORS FITTING / #6ORS-Mx1/4NPT-M STL	1				L
23	5011082	. ADAPTOR / ORS@COPPER TUBE / #6ORS-Fx#6COPPER TUBE	1				L
24	5011079	. MALE CONNECTOR / ORS FITTING / #4ORS-Mx1/4NPT-M STL	1				H
24	5011081	. ADAPTOR / ORS@COPPER TUBE / #4ORS-Fx#4COPPER TUBE	1				H

From Y-7046 To 3-8164		Date:07/2024	PAGE:Y2-2245-30

A/C AUXILIARY LINE / PARCEL RACK

Item#	Part	Description	XLII 45	XLII MTH40	XLII MTH45	XLII MTH45E	NOTES
25	453448	HOSE ASSY / #8 1530MM	1				
. NS	507343	. O-RING / ORS FITTING / #8 NEO	2				
. NS	950358	. PROTECTOR CAP LOW PRESSURE PORT / "TUBE-O"	1				
25	455235	HOSE ASSY / #8 1530MM	1				S
. NS	507343	. O-RING / ORS FITTING / #8 NEO	2				S
. NS	950358	. PROTECTOR CAP LOW PRESSURE PORT / "TUBE-O"	1				S
26	453447	HOSE ASSY / #12 1900MM	1				
. NS	507344	. O-RING / ORS FITTING / #10 NEO	2				
. NS	950367	. PROTECTOR CAP HIGH PRESSURE PORT / "TUBE-O"	1				
26	455234	HOSE ASSY / #12 1900MM	1				S
. NS	507344	. O-RING / ORS FITTING / #10 NEO	2				S
. NS	950367	. PROTECTOR CAP HIGH PRESSURE PORT / "TUBE-O"	1				S
27	453445	HOSE ASSY / LOW PRES. TUBE & PIPE / #12 400MM	1				
. NS	507280	. O-RING / ORS FITTING / #12 NEO	2				
27	455232	HOSE ASSY / LOW PRES. TUBE & PIPE / #12 400MM	1				S
. NS	507280	. O-RING / ORS FITTING / #12 NEO	2				S
30	500642	SCREW TP PAN PH #10x3/4 Z050	AR				
31	560481	CLAMP / 5/8" I.D.	AR				
31	560483	CLAMP / 7/8" I.D.	AR				
31	504458	CLAMP / 1 5/8" I.D.	AR				
32	451510	SUPPORT / DRYER	1				
33	504025	HOSE CLAMP / 2"5/16-3"1/4 SS / HS-44	2				
34	562060	CLAMP / 1 3/4" I.D.	AR				
35	507343	O-RING / ORS FITTING / #8 NEO	1				
36	507278	O-RING / ORS FITTING / #4 NEO	1				
50	**Y2-2245-10**	**A/C COMPRESSOR SMALL - INSTALLATION**					
51	**Y2-2240-20**	**BLOWER VENTILATION - PARCEL RACK**					
NS	454140	KIT, RETROFIT "SELTEC" COMPRESSOR / W/A/C IN PARCEL RACK ONLY To 3-8164	1				A
. NS	IS-03045	. SEE INSTRUCTION SHEET To 3-8164	1				A
		FOR VEHICLE 4-7965 SEE PAGE Y2-2245-31					
		FOR HOSES INSTALLATION					
NS	**Y2-2245-31**	**A/C AUXILIARY LINE / PARCEL RACK**					
61	453451	PIPE ASSY A/C L.H. PARCEL RACK					
62	453452	PIPE ASSY A/C R.H. PARCEL RACK					
		FOR VEHICLE 4-7965					
		USE WITH NEXT FOLLOWING PARTS					
70	453413	HOSE ASSY / #8 1500MM From 4-7965 To 4-7965	1				
. NS	507343	. O-RING / ORS FITTING / #8 NEO From 4-7965 To 4-7965	2				
70	455228	HOSE ASSY / #8 1500MM From 4-7965 To 4-7965	1				S

From Y-7046 To 3-8164		Date:07/2024	PAGE:Y2-2245-30

A/C AUXILIARY LINE / PARCEL RACK

Item#	Part	Description	XLII 45	XLII MTH40	XLII MTH45	XLII MTH45E	NOTES
. NS	507343	. O-RING / ORS FITTING / #8 NEO From 4-7965 To 4-7965	2				S
70	453447	HOSE ASSY / #12 1900MM From 4-7965 To 4-7965	1				
. NS	507344	. O-RING / ORS FITTING / #10 NEO From 4-7965 To 4-7965	2				
. NS	950367	. PROTECTOR CAP HIGH PRESSURE PORT / "TUBE-O" From 4-7965 To 4-7965	1				
70	455234	HOSE ASSY / #12 1900MM From 4-7965 To 4-7965	1				S
. NS	507344	. O-RING / ORS FITTING / #10 NEO From 4-7965 To 4-7965	2				S
. NS	950367	. PROTECTOR CAP HIGH PRESSURE PORT / "TUBE-O" From 4-7965 To 4-7965	1				S
70	453514	MOISTURE INDICATOR ASSY From 4-7965 To 4-7965	1				
. NS	950379	. MOISTURE INDICATOR From 4-7965 To 4-7965	1				
70	453642	HOSE ASSY / #6 600MM From 4-7965 To 4-7965	1				
. NS	507278	. O-RING / ORS FITTING / #4 NEO From 4-7965 To 4-7965	2				
70	N.P.N.	HOSE ASSY / #6 600MM From 4-7965 To 4-7965	1				4 S
70	453643	HOSE ASSY / #8 2220MM From 4-7965 To 4-7965	1				
. NS	507343	. O-RING / ORS FITTING / #8 NEO From 4-7965 To 4-7965	2				
70	455262	HOSE ASSY / #8 2220MM From 4-7965 To 4-7965	1				S
. NS	507343	. O-RING / ORS FITTING / #8 NEO From 4-7965 To 4-7965	2				S
70	453730	HOSE ASSY / #6 1595MM From 4-7965 To 4-7965	1				
. NS	507278	. O-RING / ORS FITTING / #4 NEO From 4-7965 To 4-7965	2				
70	455265	HOSE ASSY / #6 1595MM From 4-7965 To 4-7965	1				S
. NS	507278	. O-RING / ORS FITTING / #4 NEO From 4-7965 To 4-7965	2				S
70	950381	CONDENSOR COIL From 4-7965 To 4-7965	1				
70	950467	CONDENSOR COIL E-COAT LT-8 From 4-7965 To 4-7965	1				
70	950370	FILTER DRYER From 4-7965 To 4-7965	1				
. NS	507085	. O-RING 7/16" I.D X 1/32" From 4-7965 To 4-7965	1				
70	504026	HOSE CLAMP / 2"13/16-3"3/4 SS / HS-52 From 4-7965 To 4-7965	2				
		A) THIS KIT INCLUDES ALL COMPONENTS REQUIRED TO MAKE CHANGE					
		H) TO FIX BY PASS TO HIGH PRESSURE SIDE					
		L) TO FIX BY PASS TO LOW PRESSURE SIDE					
		S) SERVICE					
		4) NO PARTS NUMBER					
		P) CALL ORDER DESK FOR SPECIFIC APPLICATION (V.I.N.)					

From 4-8165 To 6-8906		Date:07/2024	PAGE:Y2-2245-31
A/C AUXILIARY LINE / PARCEL RACK			

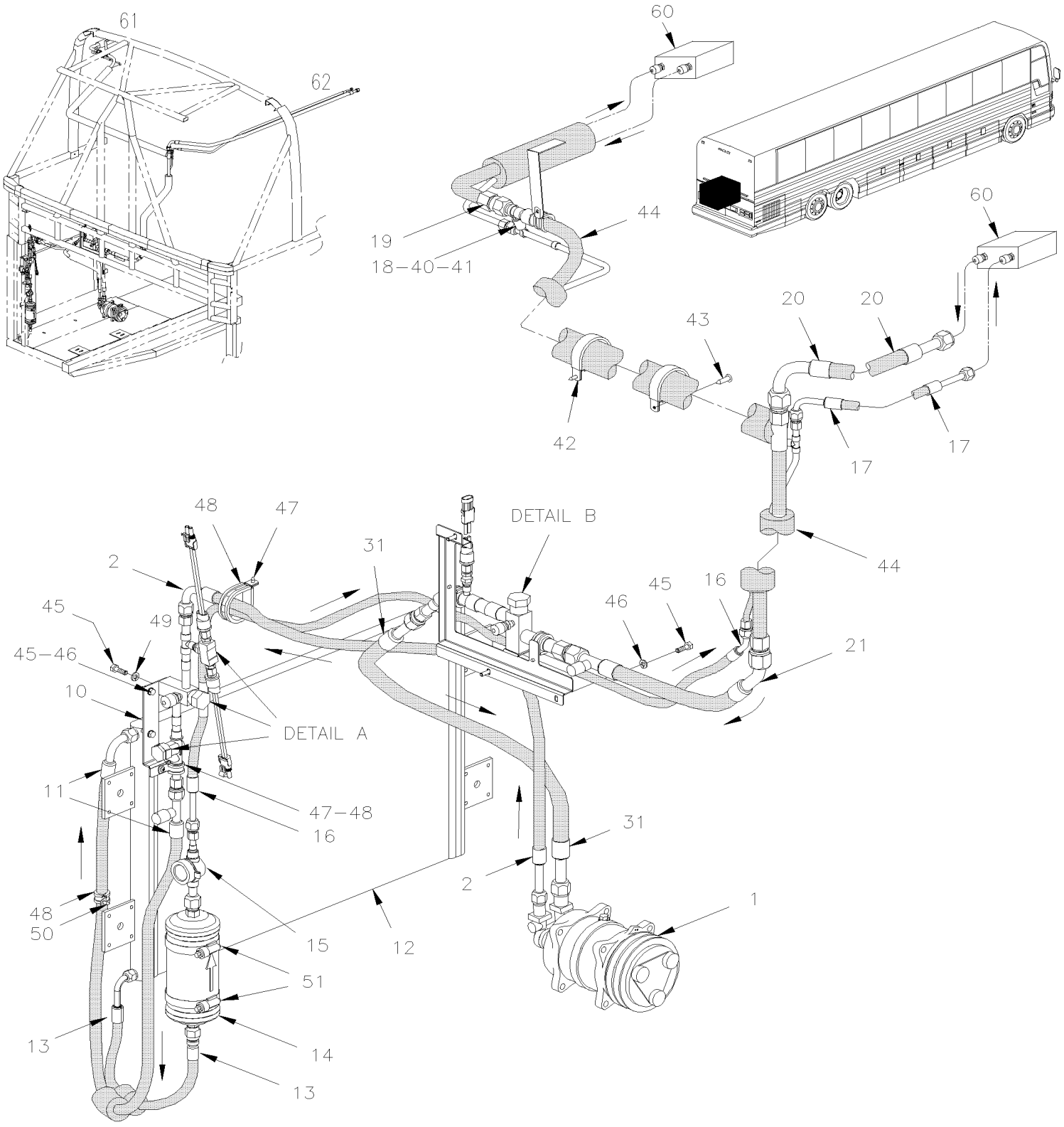

From 4-8165 To 6-8906		Date:07/2024	PAGE:Y2-2245-31
A/C AUXILIARY LINE / PARCEL RACK			

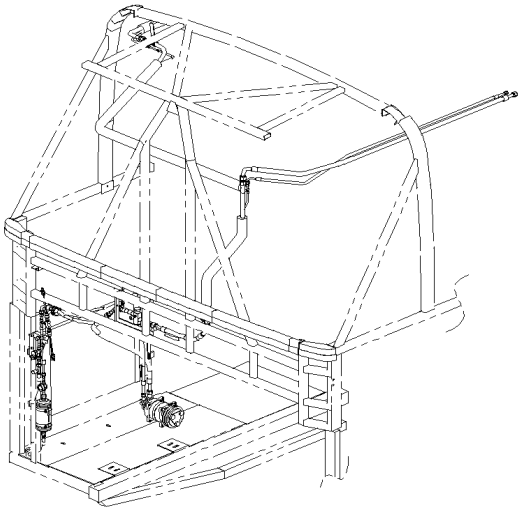

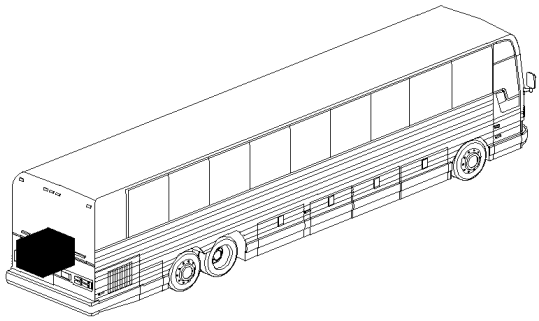

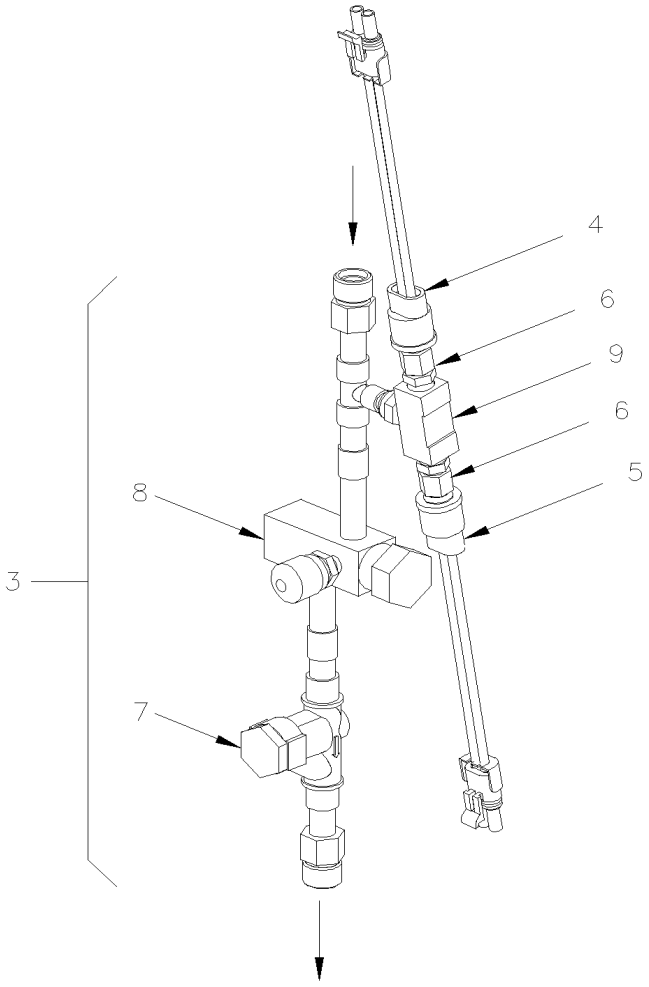

DETAIL A

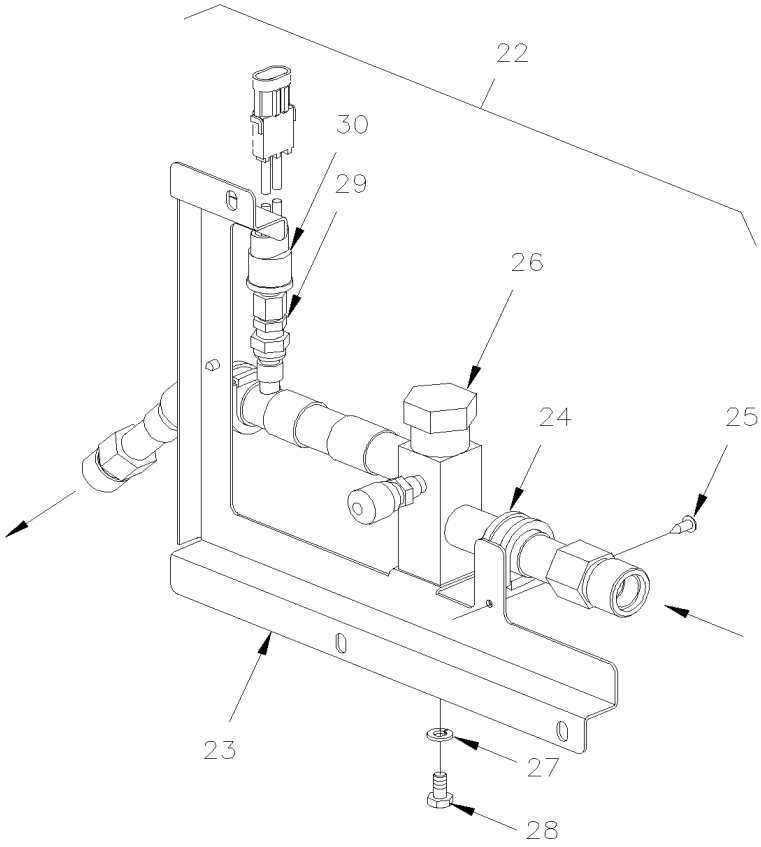

DETAIL B

From 4-8165 To 6-8906		Date:07/2024	PAGE:Y2-2245-31

A/C AUXILIARY LINE / PARCEL RACK

Item#	Part	Description	XLII 45	XLII MTH40	XLII MTH45	XLII MTH45E	NOTES
1	**Y2-2245-11**	**A/C COMPRESSOR SMALL - INSTALLATION**					
2	454067	HOSE ASSY / #8 960MM	1				A
. NS	507343	. O-RING / ORS FITTING / #8 NEO	2				A
2	455276	HOSE ASSY / #8 960MM	1				A S
. NS	507343	. O-RING / ORS FITTING / #8 NEO	2				A S
3	454066	VALVE ASSY / HI-SIDE	1				
4	454084	. PRESSURE SWITCH N.O. 195-150 20PS001MA195K150K	1				
5	453380	. PRESSURE SWITCH N.C. 350-245 20PS001MB350K245R	1				
6	950249	. SCHRADER VALVE 1/4NPT-M	2				
7	950326	. CHECK VALVE	1				
8	950376	. VALVE SERVICE HIGH PRESSURE	1				
9	501894	. MALE BRANCHE TEE / PIPE FITTING / 1/4NPT-Fx1/4NPT-Fx1/4NPT-M BR	1				
10	454072	SUPPORT / HIGHT PRESSURE VALVE	1				
11	454070	HOSE ASSY / #8 1325MM	1				
. NS	507343	. O-RING / ORS FITTING / #8 NEO	2				
11	455278	HOSE ASSY / #8 1325MM	1				S
. NS	507343	. O-RING / ORS FITTING / #8 NEO	2				S
12	**Y2-2255-11**	**CONDENSOR - INSTALLATION SMALL A/C SYSTEM**					
13	454069	HOSE ASSY / #6 515MM	1				
. NS	507278	. O-RING / ORS FITTING / #4 NEO	1				
14	950370	FILTER DRYER	1				
. NS	507085	. O-RING 7/16" I.D X 1/32"	1				
15	453514	MOISTURE INDICATOR ASSY	1				
. NS	950379	. MOISTURE INDICATOR	1				
15	950379	. MOISTURE INDICATOR	1				
15	950029	. CAP, MOISTURE INDICATOR	1				
16	454068	HOSE ASSY / #6 1675MM	1				A
. NS	507278	. O-RING / ORS FITTING / #4 NEO	1				A
16	455277	HOSE ASSY / #6 1675MM	1				S
. NS	507278	. O-RING / ORS FITTING / #4 NEO	1				S
17	453454	HOSE ASSY / #12 1800MM	1				
. NS	507344	. O-RING / ORS FITTING / #10 NEO	1				
. NS	507280	. O-RING / ORS FITTING / #12 NEO	1				
17	455238	HOSE ASSY / #12 1800MM	1				S
. NS	507344	. O-RING / ORS FITTING / #10 NEO	1				S
. NS	507280	. O-RING / ORS FITTING / #12 NEO	1				S
18	507278	O-RING / ORS FITTING / #4 NEO	1				
19	507343	O-RING / ORS FITTING / #8 NEO	1				
20	453455	HOSE ASSY / PIPE & R.H. PARCEL RACK #6 1850MM	1				
. NS	507278	. O-RING / ORS FITTING / #4 NEO	2				
20	455239	HOSE ASSY / PIPE & R.H. PARCEL RACK #6 1850MM	1				S
. NS	507278	. O-RING / ORS FITTING / #4 NEO	2				S

From 4-8165 To 6-8906		Date:07/2024	PAGE:Y2-2245-31

A/C AUXILIARY LINE / PARCEL RACK

Item#	Part	Description	XLII 45	XLII MTH40	XLII MTH45	XLII MTH45E	NOTES
21	454062	HOSE ASSY / #12 355MM	1				
. NS	507280	. O-RING / ORS FITTING / #12 NEO	2				
21	455275	HOSE ASSY / #12 355MM	1				S
. NS	507280	. O-RING / ORS FITTING / #12 NEO	2				S
22	454061	VALVE ASSY W/SUPPORT / LOW SIDE	1				
23	454063	. SUPPORT / LOW PRESSURE VALVE	1				
24	952635	. CLAMP / 1" I.D.	1				
25	509805	. SCREW TP PAN PH #10x1/2 BK	1				
26	950377	. VALVE SERVICE LOW PRESSURE O.E.M.	1				
26	950950	. VALVE SERVICE LOW PRESSURE	1				
. NS	950235	. . GAUGE ADAPTOR ASSY / W/BLUE CAP FOR R-134A / SUCTION SIDE (ALUMINUM)	1				
27	955920	. WASHER LO SPT 6.5x11.5x1.6 ZP	1				
28	502772	. SCREW CAP HEX 1/4-20x1/2 G5 N500	1				
29	950249	. SCHRADER VALVE 1/4NPT-M	1				
30	452831	. PRESSURE SWITCH N.O. 30-5 20SP001MA030C005C	1				
31	454071	HOSE ASSY / #12 780MM	1				A
. NS	507344	. O-RING / ORS FITTING / #10 NEO	2				A
31	455279	HOSE ASSY / #12 780MM	1				A S
. NS	507344	. O-RING / ORS FITTING / #10 NEO	2				A S
40	504586	WASHER FL SPACER .450x.625x.875 NYL	1				
41	504637	CABLE TIE / 3/16" x 13"	AR				
42	504458	CLAMP / 1 5/8" I.D.	AR				
43	500642	SCREW TP PAN PH #10x3/4 Z050	AR				
44	Call order desk	PIPE ASSY / ENGINE COMPARTMENT & PARCEL RACK	1				P
45	955920	WASHER LO SPT 6.5x11.5x1.6 ZP	AR				
46	502830	SCREW CAP HEX M6-1.0x20 G8.8 N500	AR				
47	952629	CLAMP / 5/8" I.D.	AR				
48	509805	SCREW TP PAN PH #10x1/2 BK	3				
49	502772	SCREW CAP HEX 1/4-20x1/2 G5 N500	1				
50	952629	CLAMP / 5/8" I.D.	1				
51	504026	HOSE CLAMP / 2"13/16-3"3/4 SS / HS-52	1				
60	**Y2-2240-20**	**BLOWER VENTILATION - PARCEL RACK**					
61	453451	PIPE ASSY A/C L.H. PARCEL RACK	1				
62	453452	PIPE ASSY A/C R.H. PARCEL RACK	1				
		A) USE ALSO WITH RETROFIT KIT # 454140 UP TO 3-8164					
		S) SERVICE					
		P) CALL ORDER DESK FOR SPECIFIC APPLICATION (V.I.N.)					

From Y-7046 To 8-9339		Date:07/2024	PAGE:Y2-2246-00
A/C CLUTCH 05G - HOUSING MOUNTED			

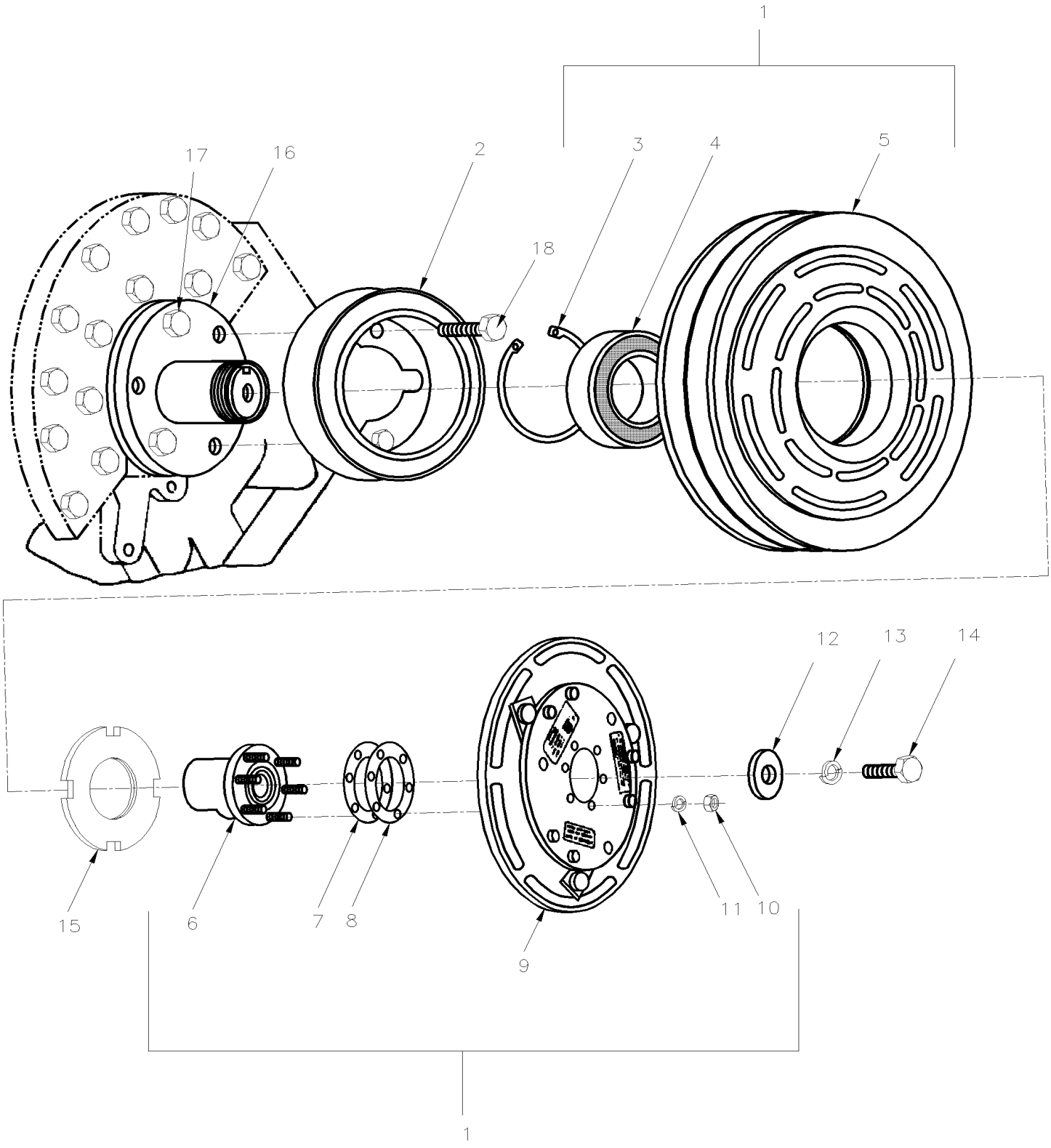

From Y-7046 To 8-9339		Date:07/2024	PAGE:Y2-2246-00

A/C CLUTCH 05G - HOUSING MOUNTED

Item#	Part	Description	XLII 45	XLII MTH40	XLII MTH45	XLII MTH45E	NOTES
1	950204	CLUTCH HOUSING-MOUNTED/24V DC 9" DIA 2B GROVE	1	1	1	1	
2	950156	COIL 24V	1	1	1	1	A
3	950146	. CIRCLIP INTERNAL	1	1	1	1	
4	950141	. BEARING	1	1	1	1	
5	N.S.S.	. PULLEY	1	1	1	1	1
6	N.S.S.	. HUB DRIVE	1	1	1	1	1
7	950104	. SHIM 0.010	1	1	1	1	
8	950103	. SHIM 0.020	5	5	5	5	
9	N.S.S.	. ARMATURE	1	1	1	1	1
10	500769	. NUT HEX 1/4-20 Z050	6	6	6	6	
11	500473	. WASHER LO SPT .262x.489x.062 Z050	6	6	6	6	
NS	561813	CONNECTOR / SURE-SEAL / FEMALE HOUSING 2C / ITT CANNON 120-1804-000	1	1	1	1	
NS	561023	PIN TERMINAL / 18-14 / ITT CANNON 030-2196-001	1	1	1	1	
NS	561024	SOCKET TERMINAL / 18-14 / ITT CANNON 031-1267-001	1	1	1	1	
NS	561815	CLAMP W/ 2 / ITT CANNON 029-0263-000	1	1	1	1	
12	870784	WASHER 13/32" I.D. X 1 1/2" O.D. X 3/16" TH	1	1	1	1	
13	500478	WASHER LO SPT .380x.683x.094 Z050	1	1	1	1	
14	870785	SCREW CAP HEX 3/8-24x7/8 G8 ZP	1	1	1	1	
15	950093	NUT / W/HUB MOUNTING ONLY	1	1	1	1	
16	950092	HUB HOUSING MOUNT To 6-8795	1	1	1	1	
16	950408	HUB HOUSING MOUNT W/GROOVE FOR TWIN PORT From 6-8796	1	1	1	1	
. NS	950409	. SEAL, LIP, SHAFT SEAL / W/TWIN PORT ONLY From 6-8796	1	1	1	1	
. NS	870795	. GASKET, HUB BEARING From 6-8796	1	1	1	1	
17	500192	SCREW CAP HEX 3/8-16x1 1/4 G5 Z050	6	6	6	6	
18	186679	SCREW CAP HEX 3/8-16x1 1/4 G8 ZP	1	1	1	1	
NS	950105	SOCKET / TOOL FOR INSTALLATION					
NS	950106	PUSHER ROTOR / TOOL					
NS	950107	SPANNER WRENCH / TOOL					
		A) THIS COIL IS NOT INCLUDE WITH #950204					
		1) NOT SOLD SEPARATELY					

From Y-7046 To 6-8795		Date:07/2024	PAGE:Y2-2250-00
A/C COMPRESSOR ASSY 05G - THREE PORT			

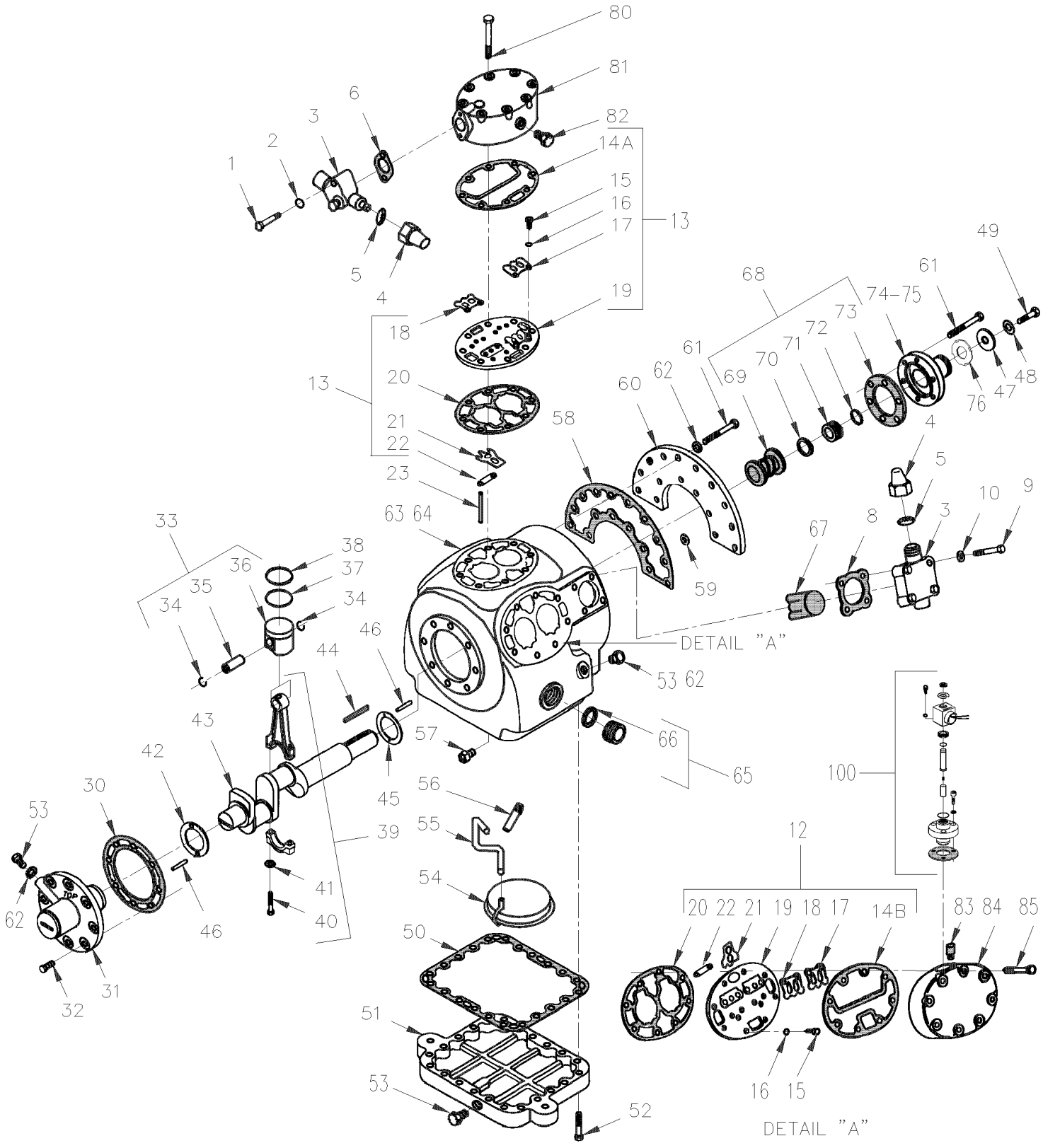

From Y-7046 To 6-8795		Date:07/2024	PAGE:Y2-2250-00

A/C COMPRESSOR ASSY 05G - THREE PORT

Item#	Part	Description	XLII 45	XLII MTH40	XLII MTH45	XLII MTH45E	NOTES
NS	950298D	A/C COMPRESSOR ASSY / W/41 C.F.M. / REMAN / W/O OIL & ACCESSORIES					
1	870877	. SCREW CAP HEX 5/16-18x2 G5 ZP	2	2	2	2	
2	870750	. GASKET	2	2	2	2	
3	**Y2-2245-00**	**. A/C COMPRESSOR 05G - INSTALLATION**					
4	870446	. . CAP SEAL	1	1	1	1	
5	870752	. . . GASKET, CAP SEAL	1	1	1	1	
6	870753	. GASKET / DISCHARGE VALVE	1	1	1	1	
8	870754	. GASKET / SUCTION VALVE	1	1	1	1	
9	870755	. SCREW CAP HEX 1/2-13x2 1/2 G5 ZP	4	4	4	4	
10	870756	. GASKET	4	4	4	4	
12	950325	. VALVE PLATE ASSY / SIDE BANK	4	4	4	4	
12	870800	. . CHECK VALVE ASSY / UNLOADER	2	2	2	2	
13	950324	. VALVE PLATE ASSY / CENTER BANK	1	1	1	1	
14A	870760	. . GASKET, CENTER CYLINDER HEAD	1	1	1	1	
14B	870797	. . GASKET, L.H & R.H CYLINDER HEAD	1	1	1	1	
15	870761	. . SCREW CAP HEXS 1/4-28 x 3/8"	4	4	4	4	
16	500473	. . WASHER LO SPT .262x.489x.062 Z050	4	4	4	4	
17	870762	. . VALVE STOP DISCHARGE	2	2	2	2	
18	870763	. . VALVE DISCHARGE	2	2	2	2	
19	N.S.S.	. . PLATE VALVE	1	1	1	1	1
20	870764	. . GASKET, VALVE PLATE	1	1	1	1	
21	950276	. . VALVE SUCTION	2	2	2	2	
22	870766	. . SPRING / SUCTION VALVE	2	2	2	2	
23	870767	. PIN DOWEL VALVE PLATE	4	4	4	4	
30	870771	. GASKET / OIL PUMP	1	1	1	1	
31	950286	. OIL PUMP ASSY / (LOW PROFIL)	1	1	1	1	
32	500192	. SCREW CAP HEX 3/8-16x1 1/4 G5 Z050	8	8	8	8	
33	950272	. PISTON & PIN ASSY / STANDARD / W/41 CFM	6	6	6	6	
33	950274	. PISTON & PIN ASSY/.020" OVERSIZE / W/41 CFM	6	6	6	6	
34	N.S.S.	. . RETAINER	2	2	2	2	1
35	N.S.S.	. . PIN	1	1	1	1	1
36	N.S.S.	. . PISTON SINGLE RING	1	1	1	1	1
37	870774	. RING / W/DOUBLE RING PISTON ONLY	6	6	6	6	
38	870775	. RING COMPRESSION / STANDARD	6	6	6	6	
38	870815	. RING COMPRESSION / .020" OVERSIZE	6	6	6	6	
39	870776	. CONNECTING ROD & CLIP ASSY / STANDARD	6	6	6	6	
39	870816	. CONNECTING ROD & CLIP ASSY / .010" OVERSIZE	6	6	6	6	
NS	870767	. . PIN DOWEL VALVE PLATE	2	2	2	2	
40	870777	. . BOLT	2	2	2	2	
41	500440	. . WASHER FL .250x.562x.065 Z050	1	1	1	1	
42	870778	. WASHER THRUST / PUMP END	1	1	1	1	

From Y-7046 To 6-8795		Date:07/2024	PAGE:Y2-2250-00

A/C COMPRESSOR ASSY 05G - THREE PORT

Item#	Part	Description	XLII 45	XLII MTH40	XLII MTH45	XLII MTH45E	NOTES
43	950273	. CRANKSHAFT ASSY / W/41 CFM	1	1	1	1	
44	950140	. KEY CRANKSHAFT / W/HOUSING-MOUNTED CLUTCH	1	1	1	1	
45	870781	. WASHER THRUST	1	1	1	1	
46	870782	. PIN STRAIGHT 1/8" DIA. X 1/2"	2	2	2	2	
NS	870783	. PIN STRAIGHT .094" X 5/16"	2	2	2	2	
47	870784	. WASHER 13/32" I.D. X 1 1/2" O.D. X 3/16" TH	1	1	1	1	
48	500478	. WASHER LO SPT .380x.683x.094 Z050	1	1	1	1	
49	870785	. SCREW CAP HEX 3/8-24x7/8 G8 ZP	1	1	1	1	
50	870786	. GASKET, BOTTOM PLATE	1	1	1	1	
51	950444	. PLATE BOTTOM	1	1	1	1	
52	500191	. SCREW CAP HEX 3/8-16x1 G5 Z050	22	22	22	22	
53	950303	. PLUG, O-RING / (CURRENT)	2	2	2	2	
54	870787	. SCREEN ASSY / OIL FILTER	1	1	1	1	
55	870788	. TUBE / OIL SUCTION	1	1	1	1	
56	870789	. VALVE / OIL RELIEF	1	1	1	1	
57	870790	. CHECK VALVE ASSY / OIL RETURN	2	2	2	2	
58	870791	. GASKET, SHAFT END COVER	1	1	1	1	
59	950139	. WASHER .393x.622x.031	2	2	2	2	
60	870792	. FLANGE	1	1	1	1	
61	500192	. SCREW CAP HEX 3/8-16x1 1/4 G5 Z050	21	21	21	21	
62	950139	. WASHER .393x.622x.031	21	21	21	21	
63	N.S.S.	. CRANKCASE	1	1	1	1	1
64	950283	. . BEARING, MAIN SEAL END	1	1	1	1	
65	870768	. SIGHT GLASS ASSY	2	2	2	2	
66	870769	. . GASKET, SIGHT GLASS	2	2	2	2	
67	870770	. STRAINER SUCTION	1	1	1	1	
68	950327	. SHAFT SEAL ASSY / W/HOUSING-MOUNTED CLUTCH	1	1	1	1	
69	N.S.S.	. . SEAL / SHAFT	1	1	1	1	1
70	870794	. . RING CARBON	1	1	1	1	
71	N.S.S.	. . RING WEAR	1	1	1	1	1
72	N.S.S.	. . O-RING	1	1	1	1	1
73	870795	. . GASKET, HUB BEARING	1	1	1	1	
74	950092	. HUB HOUSING MOUNT	1	1	1	1	
75	N.S.S.	. . RING FELT & RETAINING	1	1	1	1	1
76	950093	. NUT / W/HUB MOUNTING ONLY	1	1	1	1	
80	G1091280	. SCREW CAP HEX 3/8-16 X 3"1/4	8	8	8	8	
81	870757	. HEAD CYLINDER / CENTER BANK	1	1	1	1	
82	501303	. PLUG SQUARE HEAD / PIPE FITTING / 1/8NPT-M BR	1	1	1	1	
83	870799	. STRAINER	1	1	1	1	
84	870798	HEAD CYLINDER / UNLOADER	1	1	1	1	
85	502694	SCREW CAP HEX 3/8-16x3 1/4 G5 ZP	1	1	1	1	
100	**Y2-2250-15**	**A/C ELECTRIC UNLOADER - W/05G COMPRESSOR**	1	1	1	1	

From Y-7046 To 6-8795		Date:07/2024	PAGE:Y2-2250-00

A/C COMPRESSOR ASSY 05G - THREE PORT

Item#	Part	Description	XLII 45	XLII MTH40	XLII MTH45	XLII MTH45E	NOTES
101	950236	REFRIGERANT OIL POE / USE W/134A (4LITER)	AR	AR	AR	AR	
		1) NOT SOLD SEPARATELY					

From 6-8796 To 8-9339		Date:07/2024	PAGE:Y2-2250-01
A/C COMPRESSOR ASSY 05G - TWIN PORT			

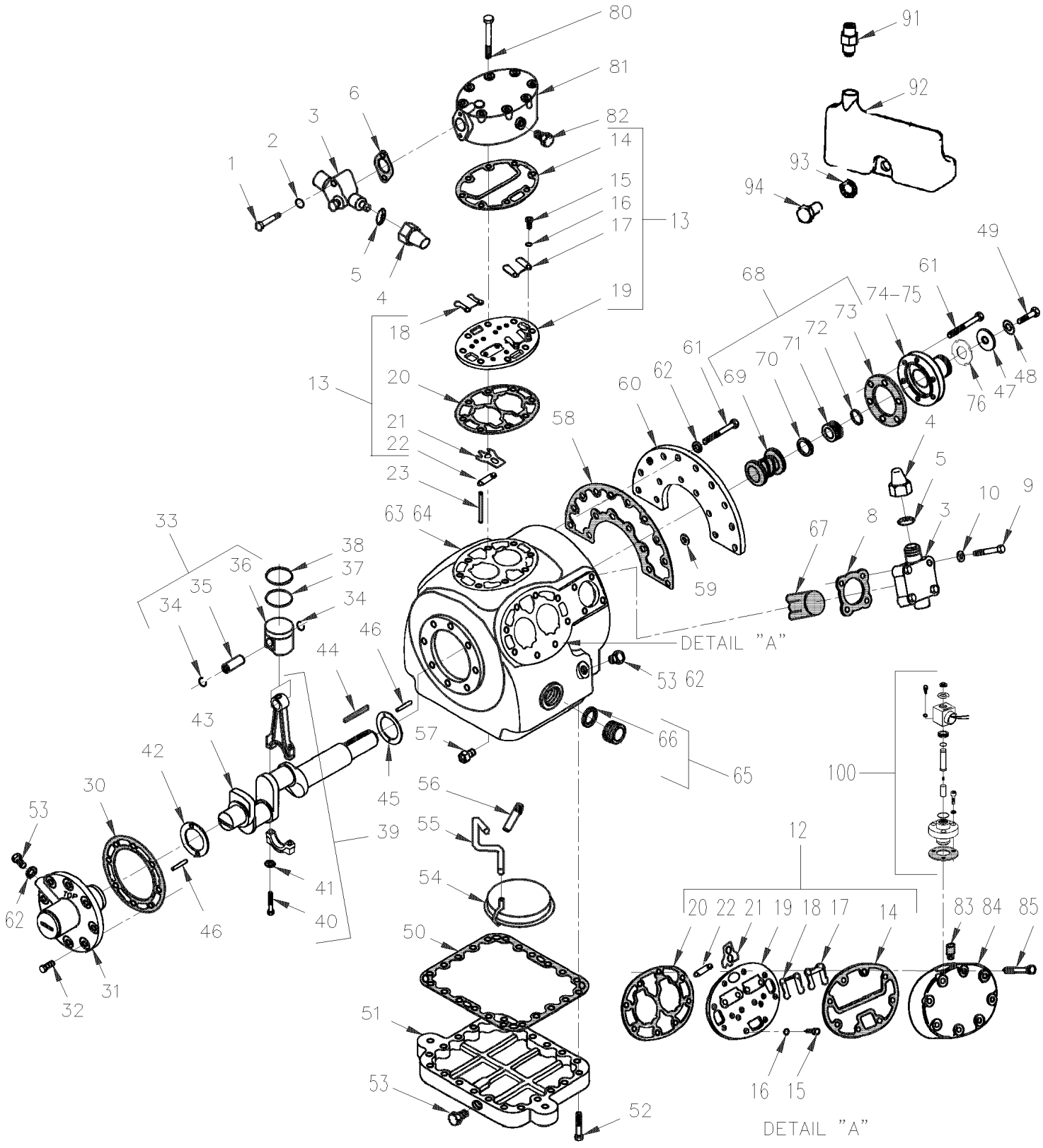

From 6-8796 To 8-9339		Date:07/2024	PAGE:Y2-2250-01

A/C COMPRESSOR ASSY 05G - TWIN PORT

Item#	Part	Description	XLII 45	XLII MTH40	XLII MTH45	XLII MTH45E	NOTES
NS	950401	A/C COMPRESSOR ASSY REBUILT / W/41 C.F.M W/O ACCESSORIES TWIN PORT					
1	870877	. SCREW CAP HEX 5/16-18x2 G5 ZP	2	2	2	2	
2	870750	. GASKET	2	2	2	2	
3	**Y2-2245-00**	**. A/C COMPRESSOR 05G - INSTALLATION**					
4	870446	. . CAP SEAL	1	1	1	1	
5	870752	. . . GASKET, CAP SEAL	1	1	1	1	
6	950425	. GASKET / DISCHARGE VALVE / (METAL)	1	1	1	1	
8	950423	. GASKET / SUCTION VALVE / (METAL)	1	1	1	1	
9	870755	. SCREW CAP HEX 1/2-13x2 1/2 G5 ZP	4	4	4	4	
10	870756	. GASKET	4	4	4	4	
12	950415	. VALVE PLATE ASSY / SIDE BANK / W/TWIN PORT ONLY	2	2	2	2	
NS	870800	. . CHECK VALVE ASSY / UNLOADER	2	2	2	2	
13	950414	. VALVE PLATE ASSY / CENTER BANK / W/TWIN PORT ONLY	1	1	1	1	
14	950421	. . GASKET, CYLINDER HEAD / W/TWIN PORT ONLY	1	1	1	1	
15	870761	. . SCREW CAP HEXS 1/4-28 x 3/8"	4	4	4	4	
16	500473	. . WASHER LO SPT .262x.489x.062 Z050	4	4	4	4	
17	950416	. . VALVE DISCHARGE / W/TWIN PORT ONLY	2	2	2	2	
18	950417	. . BACKER VALVE DISCHARGE / W/TWIN PORT ONLY	2	2	2	2	
19	N.S.S.	. . PLATE VALVE	1	1	1	1	1
20	950420	. . GASKET, VALVE PLATE / W/TWIN PORT ONLY	1	1	1	1	
21	950418	. . VALVE SUCTION / W/TWIN PORT ONLY	2	2	2	2	
22	950419	. . SPRING / SUCTION VALVE / W/TWIN PORT ONLY	2	2	2	2	
23	870767	. PIN DOWEL VALVE PLATE	4	4	4	4	
30	870771	. GASKET / OIL PUMP	1	1	1	1	
31	950403	. OIL PUMP ASSY / W/TWIN PORT ONLY	1	1	1	1	
32	500192	. SCREW CAP HEX 3/8-16x1 1/4 G5 Z050	8	8	8	8	
33	950272	. PISTON & PIN ASSY / STANDARD / W/41 CFM	6	6	6	6	
33	950274	. PISTON & PIN ASSY/.020" OVERSIZE / W/41 CFM	6	6	6	6	
34	N.S.S.	. . RETAINER	2	2	2	2	1
35	N.S.S.	. . PIN	1	1	1	1	1
36	N.S.S.	. . PISTON SINGLE RING	1	1	1	1	1
37	870774	. RING / W/DOUBLE RING PISTON ONLY	6	6	6	6	
38	870775	. RING COMPRESSION / STANDARD	6	6	6	6	
38	870815	. RING COMPRESSION / .020" OVERSIZE	6	6	6	6	
39	870776	. CONNECTING ROD & CLIP ASSY / STANDARD	6	6	6	6	
39	870816	. CONNECTING ROD & CLIP ASSY / .010" OVERSIZE	6	6	6	6	
NS	870767	. . PIN DOWEL VALVE PLATE	2	2	2	2	
40	870777	. . BOLT	2	2	2	2	
41	500440	. . WASHER FL .250x.562x.065 Z050	1	1	1	1	
42	870778	. WASHER THRUST / PUMP END	1	1	1	1	
43	950406	. CRANKSHAFT ASSY / W/41 CFM / W/TWIN PORT ONLY	1	1	1	1	

From 6-8796 To 8-9339		Date:07/2024	PAGE:Y2-2250-01

A/C COMPRESSOR ASSY 05G - TWIN PORT

Item#	Part	Description	XLII 45	XLII MTH40	XLII MTH45	XLII MTH45E	NOTES
44	950140	. KEY CRANKSHAFT / W/HOUSING-MOUNTED CLUTCH	1	1	1	1	
45	870781	. WASHER THRUST	1	1	1	1	
46	870782	. PIN STRAIGHT 1/8" DIA. X 1/2"	2	2	2	2	
NS	870783	. PIN STRAIGHT .094" X 5/16"	2	2	2	2	
47	870784	. WASHER 13/32" I.D. X 1 1/2" O.D. X 3/16" TH	1	1	1	1	
48	500478	. WASHER LO SPT .380x.683x.094 Z050	1	1	1	1	
49	870785	. SCREW CAP HEX 3/8-24x7/8 G8 ZP	1	1	1	1	
50	950402	. GASKET, BOTTOM PLATE / (METAL)	1	1	1	1	
51	950444	. PLATE BOTTOM	1	1	1	1	
52	500191	. SCREW CAP HEX 3/8-16x1 G5 Z050	22	22	22	22	
53	950303	. PLUG, O-RING / (CURRENT)	2	2	2	2	
54	870787	. SCREEN ASSY / OIL FILTER	1	1	1	1	
55	870788	. TUBE / OIL SUCTION	1	1	1	1	
56	870789	. VALVE / OIL RELIEF	1	1	1	1	
57	870790	. CHECK VALVE ASSY / OIL RETURN	2	2	2	2	
58	950412	. GASKET, SHAFT END COVER / W/TWIN PORT ONLY	1	1	1	1	
59	950139	. WASHER .393x.622x.031	2	2	2	2	
60	870792	. FLANGE	1	1	1	1	
61	500192	. SCREW CAP HEX 3/8-16x1 1/4 G5 Z050	21	21	21	21	
62	950139	. WASHER .393x.622x.031	21	21	21	21	
63	N.S.S.	. CRANKCASE	1	1	1	1	1
64	950283	. . BEARING, MAIN SEAL END	1	1	1	1	
65	870768	. SIGHT GLASS ASSY	2	2	2	2	
66	870769	. . GASKET, SIGHT GLASS	2	2	2	2	
67	870770	. STRAINER SUCTION	1	1	1	1	
68	950407	. SHAFT SEAL ASSY / W/HOUSING-MOUNTED CLUTCH / W/TWIN PORT ONLY	1	1	1	1	
69	N.S.S.	. . SEAL / SHAFT	1	1	1	1	1
70	870794	. . RING CARBON	1	1	1	1	
71	N.S.S.	. . RING WEAR	1	1	1	1	1
72	N.S.S.	. . O-RING	1	1	1	1	1
73	870795	. . GASKET, HUB BEARING	1	1	1	1	
74	950408	. HUB HOUSING MOUNT W/GROOVE FOR TWIN PORT	1	1	1	1	
. NS	950409	. . SEAL, LIP, SHAFT SEAL / W/TWIN PORT ONLY	1	1	1	1	
. NS	870795	. . GASKET, HUB BEARING	1	1	1	1	
75	950409	. SEAL, LIP, SHAFT SEAL / W/TWIN PORT ONLY	1	1	1	1	
76	950093	. NUT / W/HUB MOUNTING ONLY	1	1	1	1	
80	G1091280	. SCREW CAP HEX 3/8-16 X 3"1/4	8	8	8	8	
81	870757	. HEAD CYLINDER / CENTER BANK	1	1	1	1	
82	501303	. PLUG SQUARE HEAD / PIPE FITTING / 1/8NPT-M BR	1	1	1	1	
83	870799	. STRAINER	1	1	1	1	
84	950426	HEAD CYLINDER / UNLOADER / W/TWIN PORT ONLY	1	1	1	1	
85	502694	SCREW CAP HEX 3/8-16x3 1/4 G5 ZP	1	1	1	1	

From 6-8796 To 8-9339		Date:07/2024	PAGE:Y2-2250-01

A/C COMPRESSOR ASSY 05G - TWIN PORT

Item#	Part	Description	XLII 45	XLII MTH40	XLII MTH45	XLII MTH45E	NOTES
91	950410	ACCESS VALVE / W/TWIN PORT ONLY	1	1	1	1	
92	950411	RESERVOIR / W/TWIN PORT ONLY	1	1	1	1	
93	500856	WASHER LO INT .384x.692x.040 ZP	1	1	1	1	
94	950967	SCREW CAP HEX 3/8-16 X 3/4 G8	1	1	1	1	
100	**Y2-2250-15**	**A/C ELECTRIC UNLOADER - W/05G COMPRESSOR**	1	1	1	1	
NS	950236	REFRIGERANT OIL POE / USE W/134A (4LITER)	AR	AR	AR	AR	
		1) NOT SOLD SEPARATELY					

From Y-7046 To 8-9339		Date:07/2024	PAGE:Y2-2250-15
A/C ELECTRIC UNLOADER - W/05G COMPRESSOR			

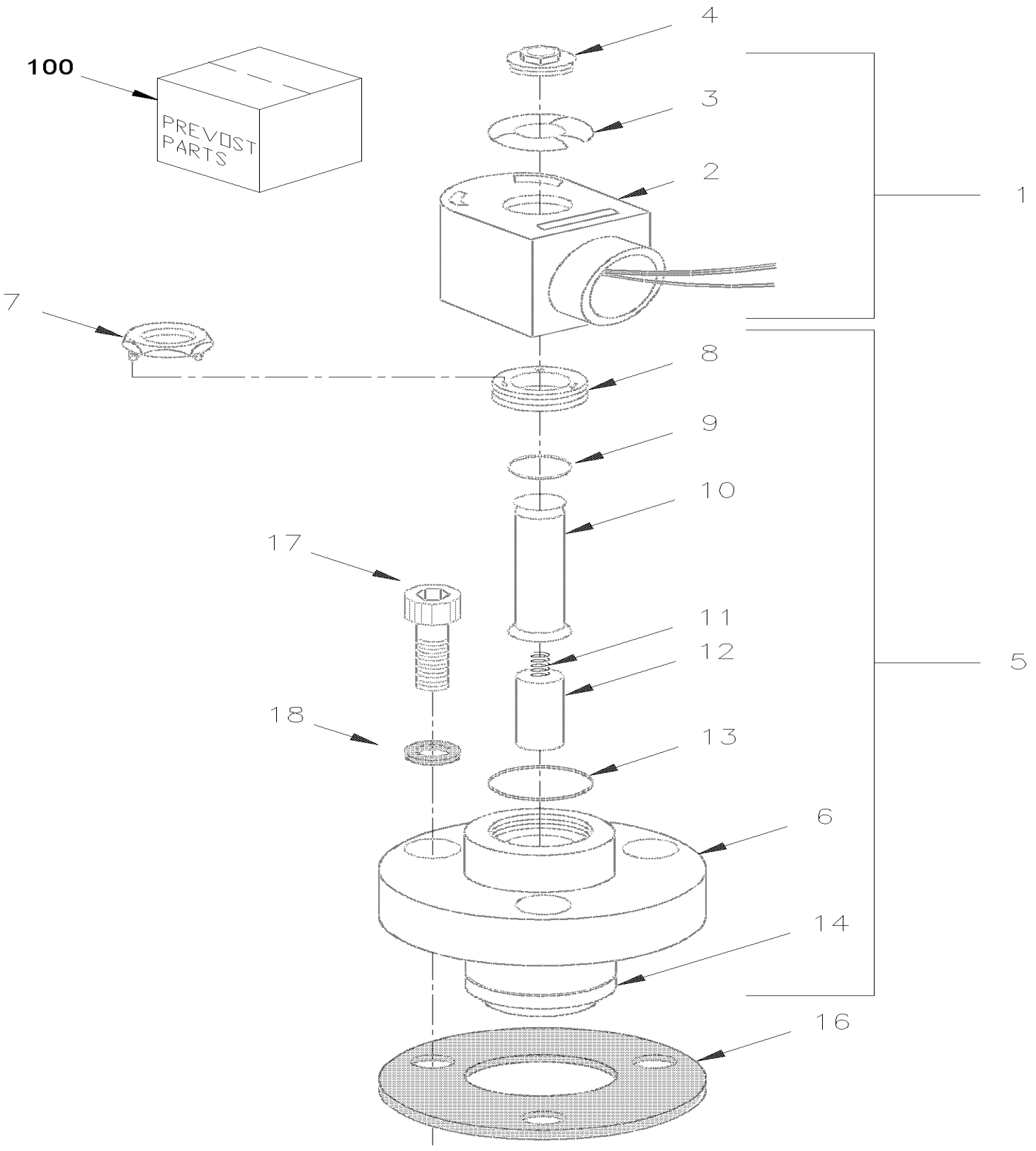

From Y-7046 To 8-9339		Date:07/2024	PAGE:Y2-2250-15

A/C ELECTRIC UNLOADER - W/05G COMPRESSOR

Item#	Part	Description	XLII 45	XLII MTH40	XLII MTH45	XLII MTH45E	NOTES
	063969	COIL ASSY W/CONNECTOR	2	2	2	2	
1	950096	. COIL 24V	1	1	1	1	
2	N.S.S.	. . COIL	1	1	1	1	1
3	N.S.S.	. . NAMEPLATE / VOLTAGE	1	1	1	1	1
4	N.S.S.	. . CAP, SNAP	1	1	1	1	1
4	N.S.S.	. . CAP, SNAP	1	1	1	1	1
NS	561566	. . CONNECTOR / WEATHER PACK / PH 2C / BLACK / PED 12010973	1	1	1	1	
NS	561578	. . SOCKET TERMINAL / 16-14 / PED 12010182	2	2	2	2	
NS	561786	. . CABLE SEAL / GRAY / PED 15324980	2	2	2	2	
5	950095	BODY / UNLOADER VALVE	1	1	1	1	
6	N.S.S.	. BODY, VALVE	1	1	1	1	1
7	N.S.S.	. NUT / FOR REMOVING OR REPLACING TUBE COLLAR	1	1	1	1	1
8	N.S.S.	. COLLAR / TUBE	1	1	1	1	1
9	N.S.S.	. O-RING	1	1	1	1	1
10	N.S.S.	. TUBE	1	1	1	1	1
11	N.S.S.	. SPRING, PLUNGER	1	1	1	1	1
12	N.S.S.	. PLUNGER	1	1	1	1	1
13	N.S.S.	. O-RING	1	1	1	1	1
14	870818	. RING, PISTON	1	1	1	1	
16	870820	GASKET, UNLOADER	1	1	1	1	
17	5001415	SCREW CAP HEXS 1/4-28x3/4	3	3	3	3	
18	950305	GASKET / W/ALLEN BOLT	3	3	3	3	
100	950413	KIT, STEM REPAIR	1	1	1	1	B
		B) INCLUDE ITEMS # 7, 10, 11,12 & 13					
		1) NOT SOLD SEPARATELY					

From Y-7046 To 8-9339		Date:07/2024	PAGE:Y2-2251-00
GASKET - 05G A/C COMPRESSOR			

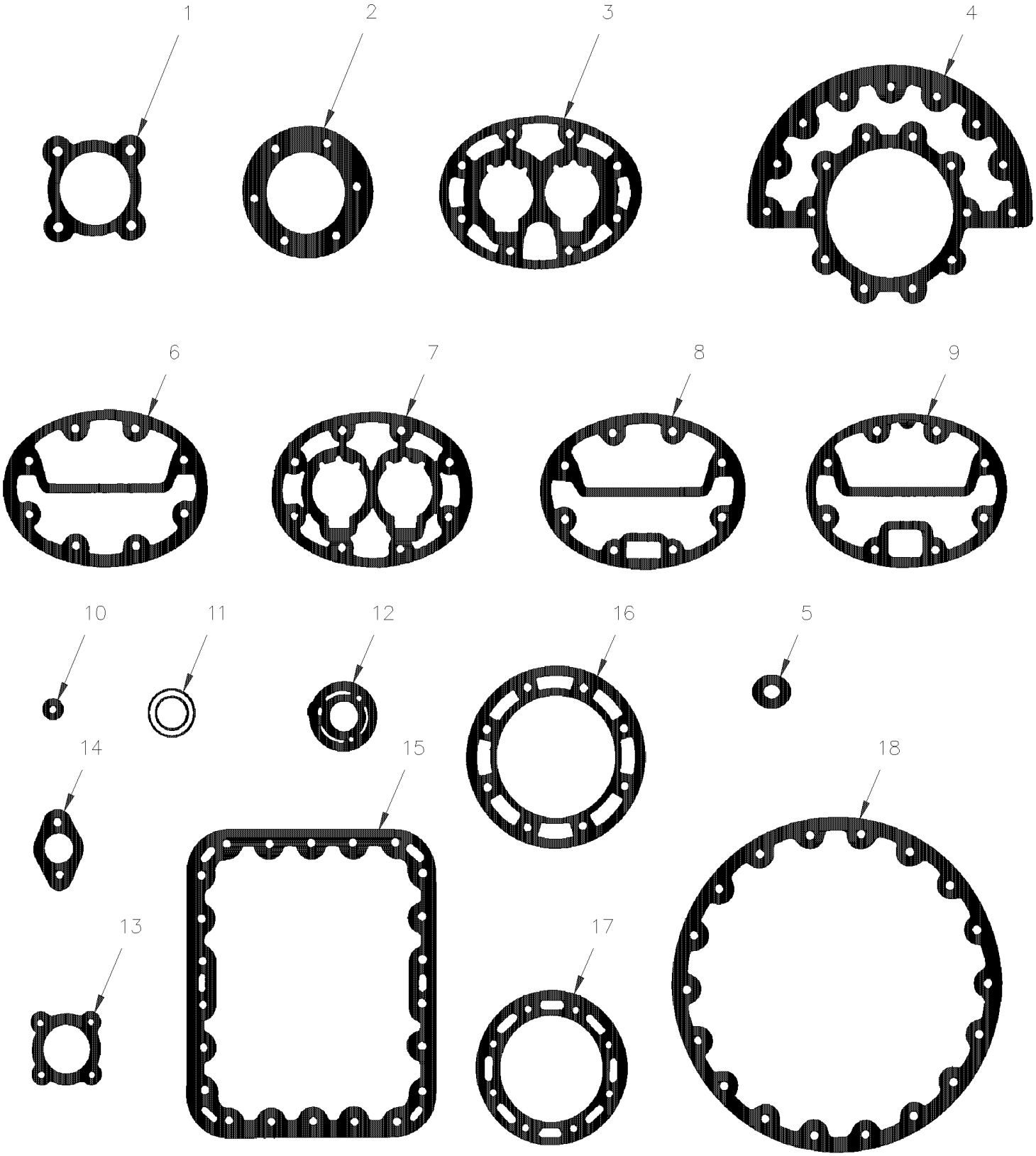

From Y-7046 To 8-9339		Date:07/2024	PAGE:Y2-2251-00

GASKET - 05G A/C COMPRESSOR

Item#	Part	Description	XLII 45	XLII MTH40	XLII MTH45	XLII MTH45E	NOTES
	870829	KIT GASKET	1	1	1	1	
1	870754	. GASKET / SUCTION VALVE	1	1	1	1	
2	870795	. GASKET, HUB BEARING	1	1	1	1	
3	870764	. GASKET, VALVE PLATE	3	3	3	3	
4	N.S.S.	. GASKET, END FLANGE	1	1	1	1	1
5	870791	. GASKET, SHAFT END COVER	2	2	2	2	
6	N.S.S.	. GASKET, LEFT & RIGHT CYLINDER HEAD - STANDARDS	2	2	2	2	1
7	N.S.S.	. GASKET, VALVE PLATE	3	3	3	3	1
8	870760	. GASKET, CENTER CYLINDER HEAD	1	1	1	1	
9	870797	. GASKET, L.H & R.H CYLINDER HEAD	2	2	2	2	
10	N.S.S.	. GASKET, OIL SUPPLY TUBE	1	1	1	1	1
11	870769	. GASKET, SIGHT GLASS	2	2	2	2	
12	870820	. GASKET, UNLOADER	2	2	2	2	
13	N.S.S.	. GASKET, OIL PUMP COVER	1	1	1	1	1
14	870753	. GASKET / DISCHARGE VALVE	2	2	2	2	
15	870786	. GASKET, BOTTOM PLATE	1	1	1	1	
16	870771	. GASKET / OIL PUMP	1	1	1	1	
17	N.S.S.	. GASKET, SHAFT	1	1	1	1	1
18	N.S.S.	. GASKET, MOTOR END COVER	1	1	1	1	1
NS	870791	. GASKET, SHAFT END COVER	1	1	1	1	
		1) NOT SOLD SEPARATELY					

From Y-7046 To 6-8906		Date:07/2024	PAGE:Y2-2255-00
CONDENSOR - INSTALLATION LARGE SYSTEM			

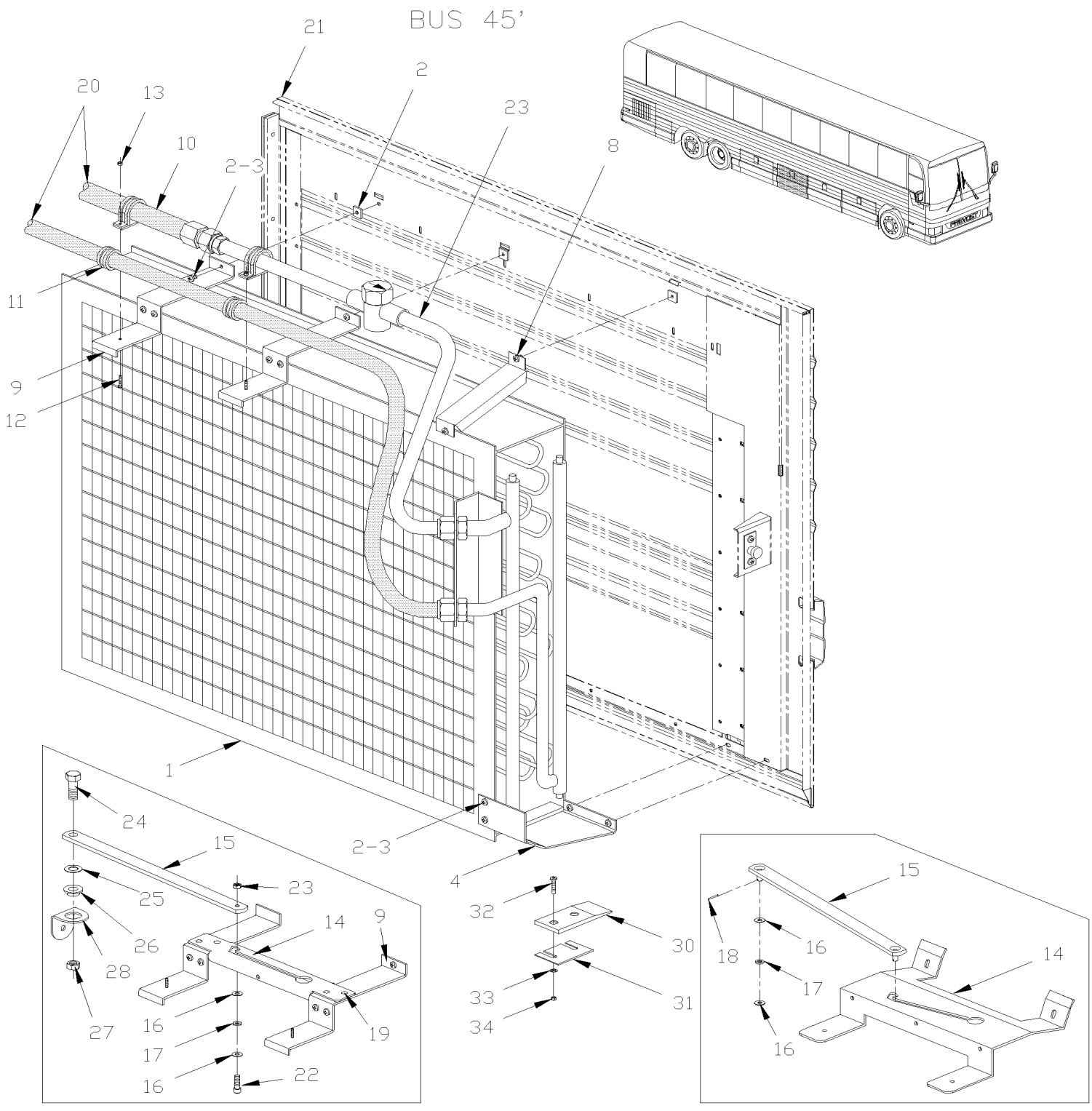

From Y-7046 To 6-8906		Date:07/2024	PAGE:Y2-2255-00

CONDENSOR - INSTALLATION LARGE SYSTEM

Item#	Part	Description	XLII 45	XLII MTH40	XLII MTH45	XLII MTH45E	NOTES
1	950259	CONDENSOR ALUMINUM	1				
. NS	501802	. O-RING / ORS FITTING / #16 NEO	1				
. NS	501829	. O-RING / ORS FITTING / #12 NEO	1				
1	453279	CONDENSOR ALUMINUM / W/BLACK E-COAT	1				
. NS	501802	. O-RING / ORS FITTING / #16 NEO	1				
. NS	501829	. O-RING / ORS FITTING / #12 NEO	1				
1	950260	CONDENSOR COPPER	1				
. NS	501802	. O-RING / ORS FITTING / #16 NEO	1				
. NS	501829	. O-RING / ORS FITTING / #12 NEO	1				
1	453278	CONDENSOR COPPER / W/BLACK E-COAT	1				
. NS	501802	. O-RING / ORS FITTING / #16 NEO	1				
. NS	501829	. O-RING / ORS FITTING / #12 NEO	1				
NS	370357	DECAL "CLEAN REGULARY"	1				
2	481249	NUT To 2-7753	37				
2	483107	SUPPORT / HOSE & STRAP RETAINER From 2-7754	2				
3	5001087	SCREW TP BDG PH #10x1/2 SS To 2-7753	37				
3	5001181	SCREW CAP HEX M6-1.0x12 SS From 2-7754	37				
NS	500411	WASHER FL .260x.697x.050 SS From 2-7754	37				
4	482322	SUPPORT	1				
8	480908	REINFORCEMENT, UPPER	1				
9	450970	SUPPORT / HOSE CLAMP To 2-7752	2				
9	483107	SUPPORT / HOSE & STRAP RETAINER From 2-7753 To 2-7878	2				
9	453607	SUPPORT / HOSE CLAMP To 2-7878	2				A
10	952637	CLAMP / 1"1/16 I.D.	2				
11	952633	CLAMP / 7/8" I.D.	2				
11	952641	CLAMP P STL ZP RUB 34.9 ID	2				
12	500603	SCREW CAP HEX SLT #10-24x2 Z050	2				
13	500767	NUT HEX #10-24 Z050	2				
14	288141	ARM GUIDE RETAINER To 2-7878	1				
14	483684	SUPPORT & ARM GUIDE RETAINER From 2-7879	1				
15	283772	ARM RETAINING To 2-7878	1				
15	288811	ARM DOOR RETAINER From 2-7879	1				
16	5001448	WASHER FL .343x.875x.062 SS18-8 From 2-7879	1				
17	502768	WASHER FL RUB .312x.625x.125 NEO From 2-7879	1				
18	502094	PIN, COTTER 1/16 x 1/2 SS From 2-7879	1				
19	500260	SCREW TC FL PH #8-32x3/4 BK To 2-7878	1				
20	**Y2-2270-00**	**RECEIVER TANK & FILTER DRYER**					
21	**Y2-1863-00**	**CONDENSOR DOOR ASSY - BUS**					
22	502625	SCREW SHR HEXS 5/16x3/8 {1/4-20 To 2-7878	1				
23	500771	NUT HEX 1/4-20 SS To 2-7878	1				
24	500046	SCREW CAP HEX 3/8-24x1 G5 Z050 To 2-7878	1				
25	500270	WASHER FL .406x1.000x.063 SS To 2-7878	1				

From Y-7046 To 6-8906		Date:07/2024	PAGE:Y2-2255-00

CONDENSOR - INSTALLATION LARGE SYSTEM

Item#	Part	Description	XLII 45	XLII MTH40	XLII MTH45	XLII MTH45E	NOTES
26	507254	BUSHING NYLINER W/SHOULDER To 2-7878	1				
27	500704	NUT HEX STO 3/8-24 Z050 To 2-7878	1				
28	288142	SUPPORT To 2-7878	1				
30	482328	BLOCK SUPPORT	1				
31	482329	SHIM	AR				
32	500346	SCREW MA FL PH 1/4-20x1 SS BK	2				
33	500473	WASHER LO SPT .262x.489x.062 Z050	2				
34	500771	NUT HEX 1/4-20 SS	2				
		A) COACH EQUIPPED WITH AUXILIARY SUPPORTAUTOCAR					

From Y-7046 To 3-8164		Date:07/2024	PAGE:Y2-2255-10
CONDENSOR - INSTALLATION SMALL A/C SYSTEM			

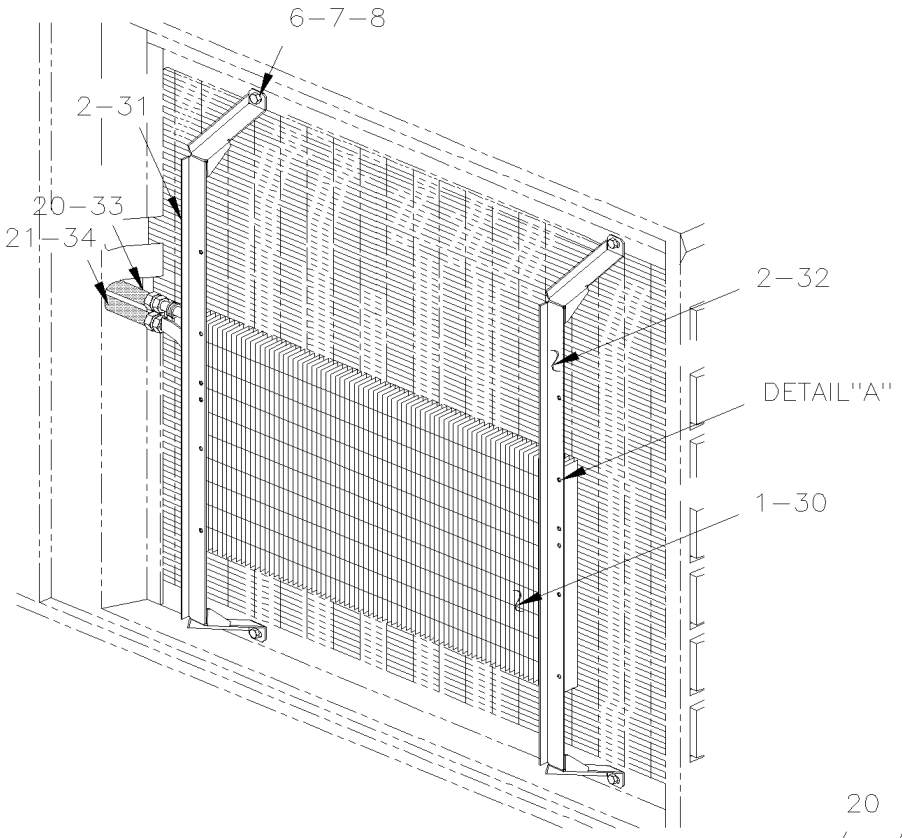

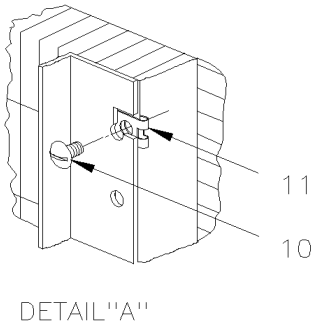

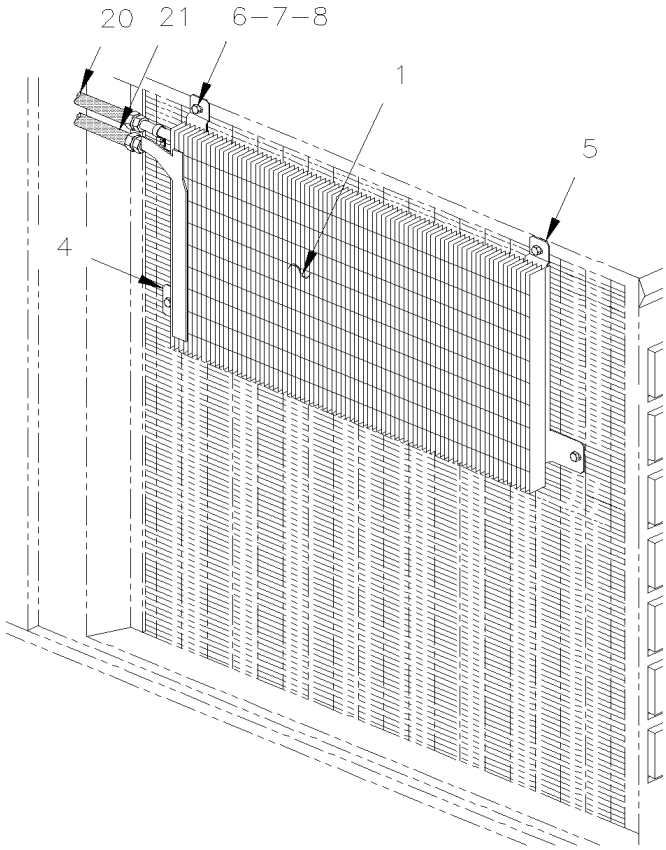

From Y-7046 To 3-8164		Date:07/2024	PAGE:Y2-2255-10

CONDENSOR - INSTALLATION SMALL A/C SYSTEM

Item#	Part	Description	XLII 45	XLII MTH40	XLII MTH45	XLII MTH45E	NOTES
1	950018	CONDENSOR COIL To Y-7367	1	1	1	1	
1	950335	CONDENSER COIL From Y-7368 To 3-8164		1	1	1	
1	950336	CONDENSOR COIL From Y-7368 To 3-8164	1				
1	**IS14130**	**RETROFIT KIT FOR OBSOLETED CONDENSORS 950018 & 950335**	1	1	1	1	
2	052258	SUPPORT To Y-7142	2				
2	052382	SUPPORT From Y-7143	2				
4	453138	SUPPORT FORWARD To Y-7142		1	1	1	
4	453586	SUPPORT FORWARD From Y-7143		1	1	1	
5	453181	SUPPORT BACKWARD To Y-7142		1	1	1	
5	453587	SUPPORT BACKWARD From Y-7143		1	1	1	
6	500179	SCREW CAP HEX 5/16-18x3/4 G5 Z050	4	4	4	4	
7	502583	WASHER LO SERR 8.15x22.3x1.0 Z050	4	4	4	4	
8	500985	WASHER FL .343x.875x.125 Z050	4	4	4	4	
10	5001087	SCREW TP BDG PH #10x1/2 SS	6	6	6	6	
11	500981	NUT SPR U #10-23/32x5/8	6	6	6	6	
20	453450	HOSE ASSY /COND INLET & HI-SIDE / W/R-134a/ #8 1800MM	1				
. NS	507343	. O-RING / ORS FITTING / #8 NEO	2				
20	455237	HOSE ASSY /COND INLET & HI-SIDE / W/R-134a/ #8 1800MM	1				S
. NS	507343	. O-RING / ORS FITTING / #8 NEO	2				S
20	453471	HOSE ASSY /COND INLET & HI-SIDE / W/R-134a/ #8 4750MM		1		1	
. NS	507343	. O-RING / ORS FITTING / #8 NEO		2		2	
20	455242	HOSE ASSY /COND INLET & HI-SIDE / W/R-134a/ #8 4750MM		1		1	S
. NS	507343	. O-RING / ORS FITTING / #8 NEO		2		2	S
20	453169	HOSE ASSY /COND INLET & HI-SIDE / W/R-134a/ #8 860MM			1		
. NS	507343	. O-RING / ORS FITTING / #8 NEO			2		
20	455190	HOSE ASSY /COND INLET & HI-SIDE / W/R-134a/ #8 860MM			1		S
. NS	507343	. O-RING / ORS FITTING / #8 NEO			2		S
NS	505181	. COIL PROTECTOR / PLASTIC / #8	AR	AR	AR	AR	
NS	560479	CLAMP / 3/8" I.D.	1	1	1	1	
21	453170	HOSE ASSY / CONDENSER & RECEIVER / #6 1100MM			1		
. NS	507278	. O-RING / ORS FITTING / #4 NEO			2		
21	455191	HOSE ASSY / CONDENSER & RECEIVER / #6 1100MM			1		S
. NS	507278	. O-RING / ORS FITTING / #4 NEO			2		S
21	453474	HOSE ASSY / CONDENSER & RECEIVER / #6 3900MM		1		1	
. NS	507278	. O-RING / ORS FITTING / #4 NEO		2		2	
21	455245	HOSE ASSY / CONDENSER & RECEIVER / #6 3900MM		1		1	S
. NS	507278	. O-RING / ORS FITTING / #4 NEO		2		2	S
21	453449	HOSE ASSY / CONDENSER & RECEIVER / #6 2370MM	1				
. NS	507278	. O-RING / ORS FITTING / #4 NEO	2				
21	455236	HOSE ASSY / CONDENSER & RECEIVER / #6 2370MM	1				S
. NS	507278	. O-RING / ORS FITTING / #4 NEO	2				S
NS	560480	CLAMP / 1/2" I.D.	1	1	1	1	

From Y-7046 To 3-8164		Date:07/2024	PAGE:Y2-2255-10

CONDENSOR - INSTALLATION SMALL A/C SYSTEM

Item#	Part	Description	XLII 45	XLII MTH40	XLII MTH45	XLII MTH45E	NOTES
NS	500638	SCREW TP PAN PH #8x1/2 Z050	2	2	2	2	
21	052252	CLOSING RUBBER PAD / 85MM x 110MM x 1/16"	1	1	1	1	
		NEXT FOLLOWING ITEMS ARE RELATED					
		WITH RETROFIT W/"SELTEC" COMPRESSOR					
30	950381	CONDENSOR COIL	1	1	1	1	E
30	950467	CONDENSOR COIL E-COAT LT-8	1	1	1	1	E
31	454230	SUPPORT FORWARD To 3-8164		1	1		A
32	454133	SUPPORT / BACKWARD To 3-8164	1			1	B C
32	454229	SUPPORT BACKWARD To 3-8164		1	1		A
33	454134	SUPPORT / FORWARD To 3-8164	1			1	B C
33	453900	HOSE ASSY / #8 685MM To 3-8164			1		A
. NS	507343	. O-RING / ORS FITTING / #8 NEO To 3-8164			2		A
33	455273	HOSE ASSY / #8 685MM To 3-8164			1		A S
. NS	507343	. O-RING / ORS FITTING / #8 NEO To 3-8164			2		A S
33	454142	HOSE ASSY / #8 1215MM To 3-8164		1		1	F
. NS	507343	. O-RING / ORS FITTING / #8 NEO To 3-8164		2		2	F
33	455291	HOSE ASSY / #8 1215MM To 3-8164		1		1	F S
. NS	507343	. O-RING / ORS FITTING / #8 NEO To 3-8164		2		2	F S
34	454109	HOSE ASSY / VALVE & EVAPORATOR / #6 205MM To 3-8164			1		A
. NS	507278	. O-RING / ORS FITTING / #4 NEO To 3-8164			2		A
34	455290	HOSE ASSY / VALVE & EVAPORATOR / #6 205MM To 3-8164			1		A S
. NS	507278	. O-RING / ORS FITTING / #4 NEO To 3-8164			2		A S
34	454141	HOSE ASSY / #6 375MM To 3-8164		1		1	F
NS	453897	KIT, RETROFIT "SELTEC" COMPRESSOR /W/W5 ONLY			1		
. NS	IS-03152	. SEE INSTRUCTION SHEET			1		
NS	454140	KIT, RETROFIT "SELTEC" COMPRESSOR / W/A/C IN PARCEL RACK ONLY To 3-8164	1				
. NS	IS-03045	. SEE INSTRUCTION SHEET To 3-8164	1				
NS	454222	KIT, RETROFIT "SELTEC" COMPRESSOR / W/MTH 40' To 3-8164		1			
. NS	IS-04009	. SEE INSTRUCTION SHEET To 3-8164		1			
NS	454223	KIT, RETROFIT "SELTEC" COMPRESSOR / W/MTH 45' To 3-8164				1	
. NS	IS-04009	. SEE INSTRUCTION SHEET To 3-8164				1	
		A) USE ONLY WITH RETROFIT KIT #453897 W / MTH-45					
		B) USE ONLY WITH RETROFIT KIT #454140 W / BUSS					
		C) USE ONLY WITH RETROFIT KIT #454223 W / MTH-45S					
		E) USE WITH ALL RETROFIT KITS					

From Y-7046 To 3-8164		Date:07/2024	PAGE:Y2-2255-10

CONDENSOR - INSTALLATION SMALL A/C SYSTEM

Item#	Part	Description	XLII 45	XLII MTH40	XLII MTH45	XLII MTH45E	NOTES
		F) USE ONLY WITH RETROFIT KIT #454140, #454222 & #454223					
		S) SERVICE					

From 4-8165 To 8-9339		Date:07/2024	PAGE:Y2-2255-11
CONDENSOR - INSTALLATION SMALL A/C SYSTEM			

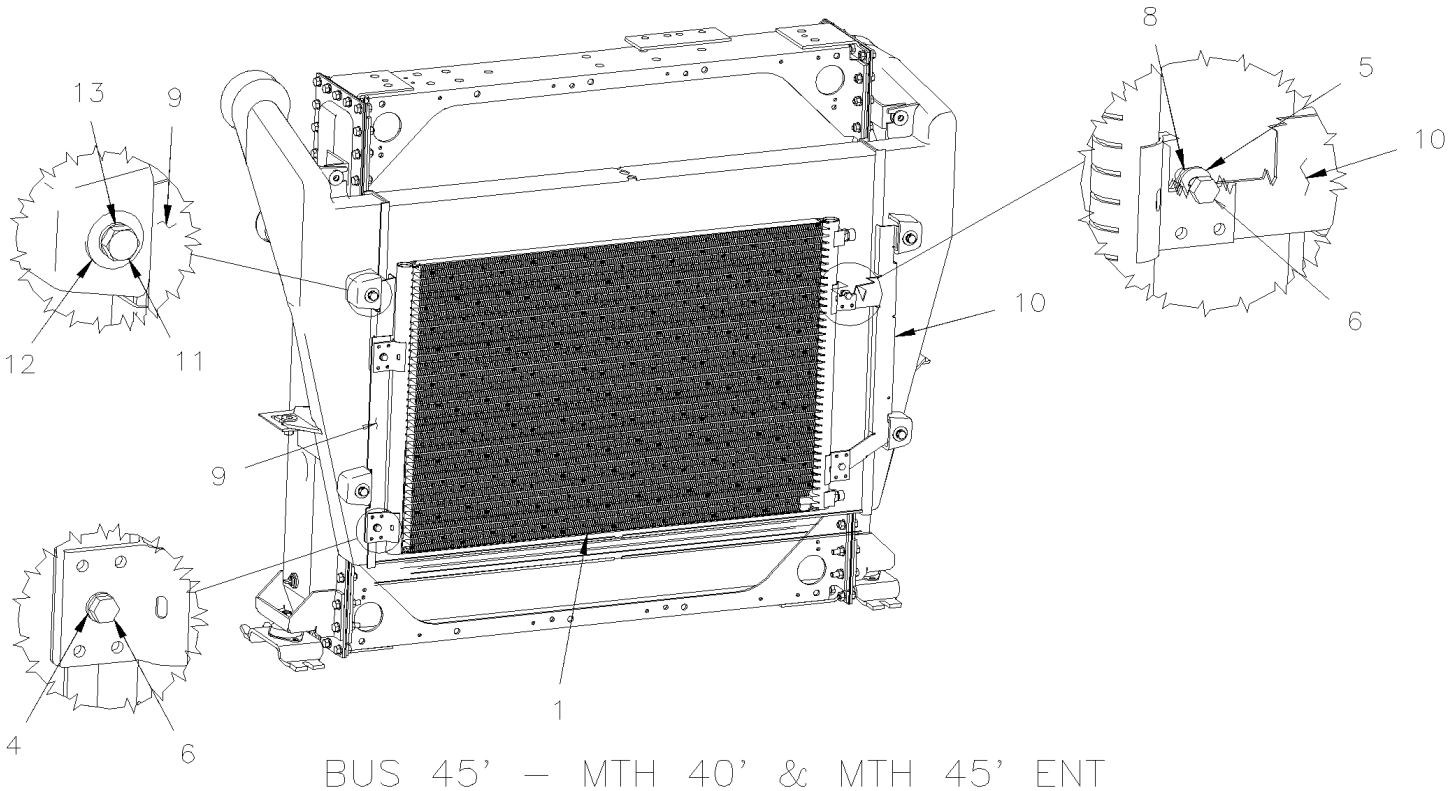

BUS 45' – MTH 40' & MTH 45' ENT

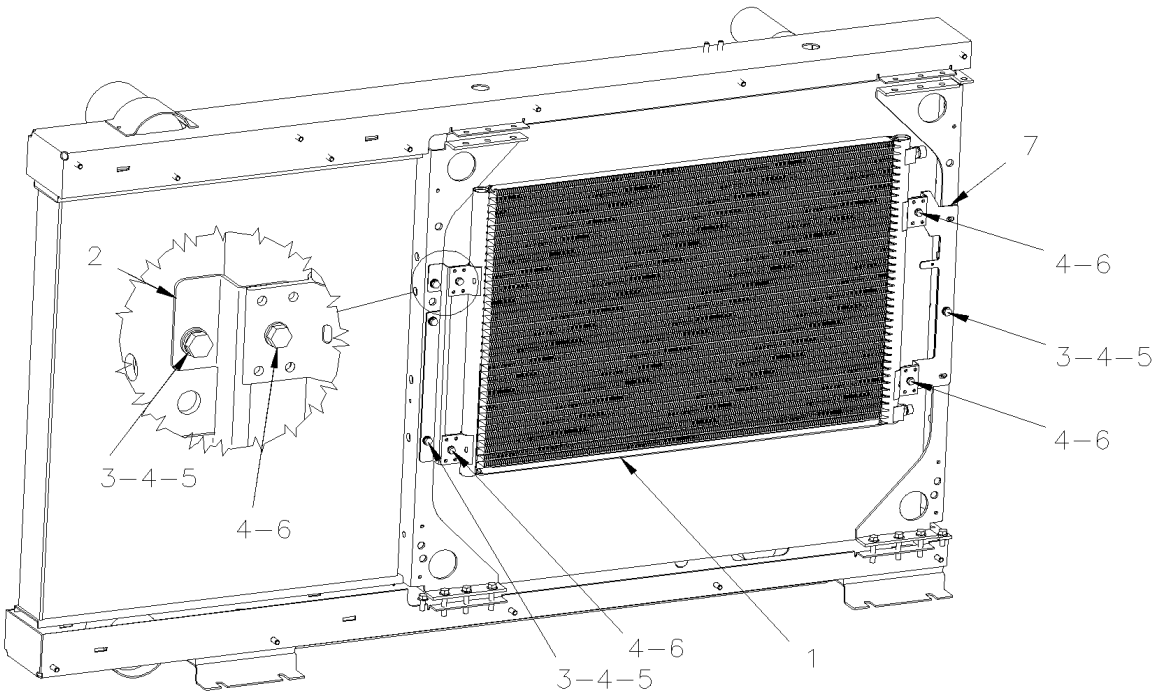

MTH 45'

From 4-8165 To 8-9339		Date:07/2024	PAGE:Y2-2255-11

CONDENSOR - INSTALLATION SMALL A/C SYSTEM

Item#	Part	Description	XLII 45	XLII MTH40	XLII MTH45	XLII MTH45E	NOTES
1	950381	CONDENSOR COIL			1		
1	950467	CONDENSOR COIL E-COAT LT-8			1		
2	454050	SUPPORT FORWARD			1		
3	502848	SCREW TC CAP HEXF 1/4-20x3/4 N500			AR		
4	955920	WASHER LO SPT 6.5x11.5x1.6 ZP			AR		
5	500877	WASHER FL .250x.562x.065 N500			AR		
6	502830	SCREW CAP HEX M6-1.0x20 G8.8 N500			AR		
7	454051	SUPPORT BACKWARD			1		
8	502681	NUT HEX NYRT M6-1.0 N500 G8	2	2		2	
9	454047	SUPPORT FORWARD	1	1		1	
10	454048	SUPPORT BACKWARD	1	1		1	
11	502862	SCREW CAP HEX M8-1.25x20 G8.8 N500	4	4		4	
12	500381	WASHER FL 8.4x25.0x2.0 N500	4	4		4	
13	500942	WASHER LO SPT 8.1x14.8x2.0 N500	4	4		4	

From Y-7046 To 8-9339		Date:07/2024	PAGE:Y2-2255-50
CONDENSOR - INSTALLATION LARGE SYSTEM			

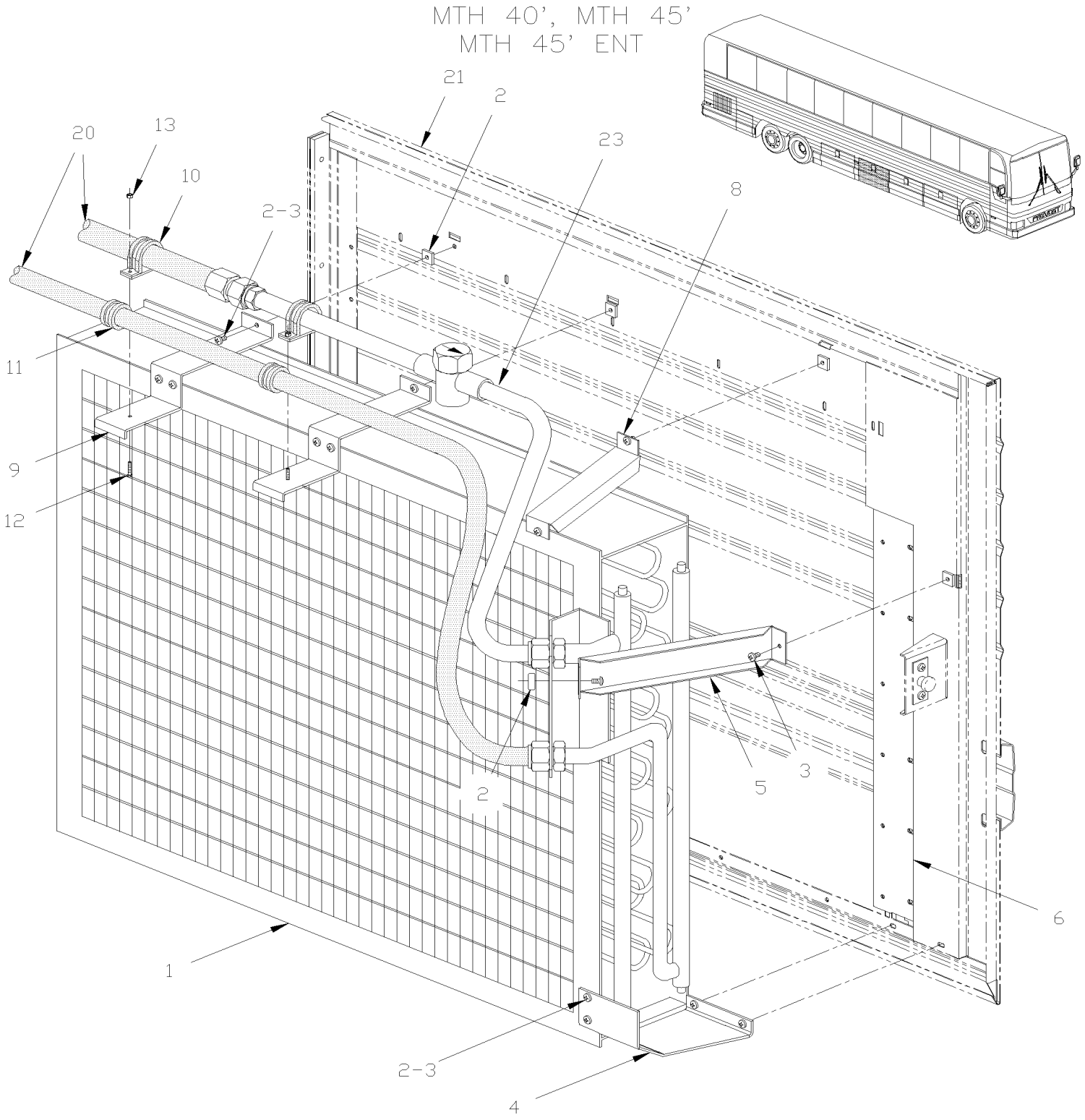

From Y-7046 To 8-9339		Date:07/2024	PAGE:Y2-2255-50

CONDENSOR - INSTALLATION LARGE SYSTEM

Item#	Part	Description	XLII 45	XLII MTH40	XLII MTH45	XLII MTH45E	NOTES
1	870654	CONDENSOR ALUMINUM 36 1/2" x 28" x 6"		1	1	1	
. NS	501802	. O-RING / ORS FITTING / #16 NEO		1	1	1	
. NS	501829	. O-RING / ORS FITTING / #12 NEO		1	1	1	
1	453277	CONDENSOR ALUMINUM / W/BLACK E-COAT 36 1/2" x 28" x 6"		1	1	1	
. NS	501802	. O-RING / ORS FITTING / #16 NEO		1	1	1	
. NS	501829	. O-RING / ORS FITTING / #12 NEO		1	1	1	
1	870729	CONDENSOR COPPER 36 1/2" x 28" x 6"		1	1	1	
. NS	501802	. O-RING / ORS FITTING / #16 NEO		1	1	1	
. NS	501829	. O-RING / ORS FITTING / #12 NEO		1	1	1	
1	453276	CONDENSOR COPPER / W/BLACK E-COAT 36 1/2" x 28" x 6"		1	1	1	
. NS	501802	. O-RING / ORS FITTING / #16 NEO		1	1	1	
. NS	501829	. O-RING / ORS FITTING / #12 NEO		1	1	1	
NS	370357	DECAL "CLEAN REGULARY"		1	1	1	
2	481249	NUT		39	39	39	
3	500524	SCREW TP PAN PH #12x5/8 SS		39	39	39	
4	480909	REINFORCEMENT, LOWER		1	1	1	
5	481054	REINFORCEMENT, SIDE		1	1	1	
6	480912	REINFORCEMENT, VERTICAL		1	1	1	
8	480908	REINFORCEMENT, UPPER		1	1	1	
9	450970	SUPPORT / HOSE CLAMP		2	2	2	
10	504458	CLAMP / 1 5/8" I.D.		2	2	2	
11	560872	CLAMP / 1"1/16 I.D.		2	2	2	
NS	501801	O-RING / ORS FITTING / #8 NEO		1	1	1	A
NS	507169	O-RING 1/2 I.D.		1	1	1	B
NS	501802	O-RING / ORS FITTING / #16 NEO		2	2	2	A
12	500603	SCREW CAP HEX SLT #10-24x2 Z050		2	2	2	
13	500767	NUT HEX #10-24 Z050		2	2	2	
20	**Y2-2222-10**	**A/C & HEATING LINE FRONT SECTION**					
21	**Y2-1863-51**	**CONDENSOR DOOR ASSY**					
21	**Y2-1863-50**	**CONDENSOR DOOR ASSY**					
23	**Y2-2270-00**	**RECEIVER TANK & FILTER DRYER**					
		A) HOSE & CONDENSER					
		B) TO HOSE #11 / HOSE & RECEIVER TANK					

From Y-7046 To 8-9339		Date:07/2024	PAGE:Y2-2260-05
CONDENSOR FAN - INSTALLATION			

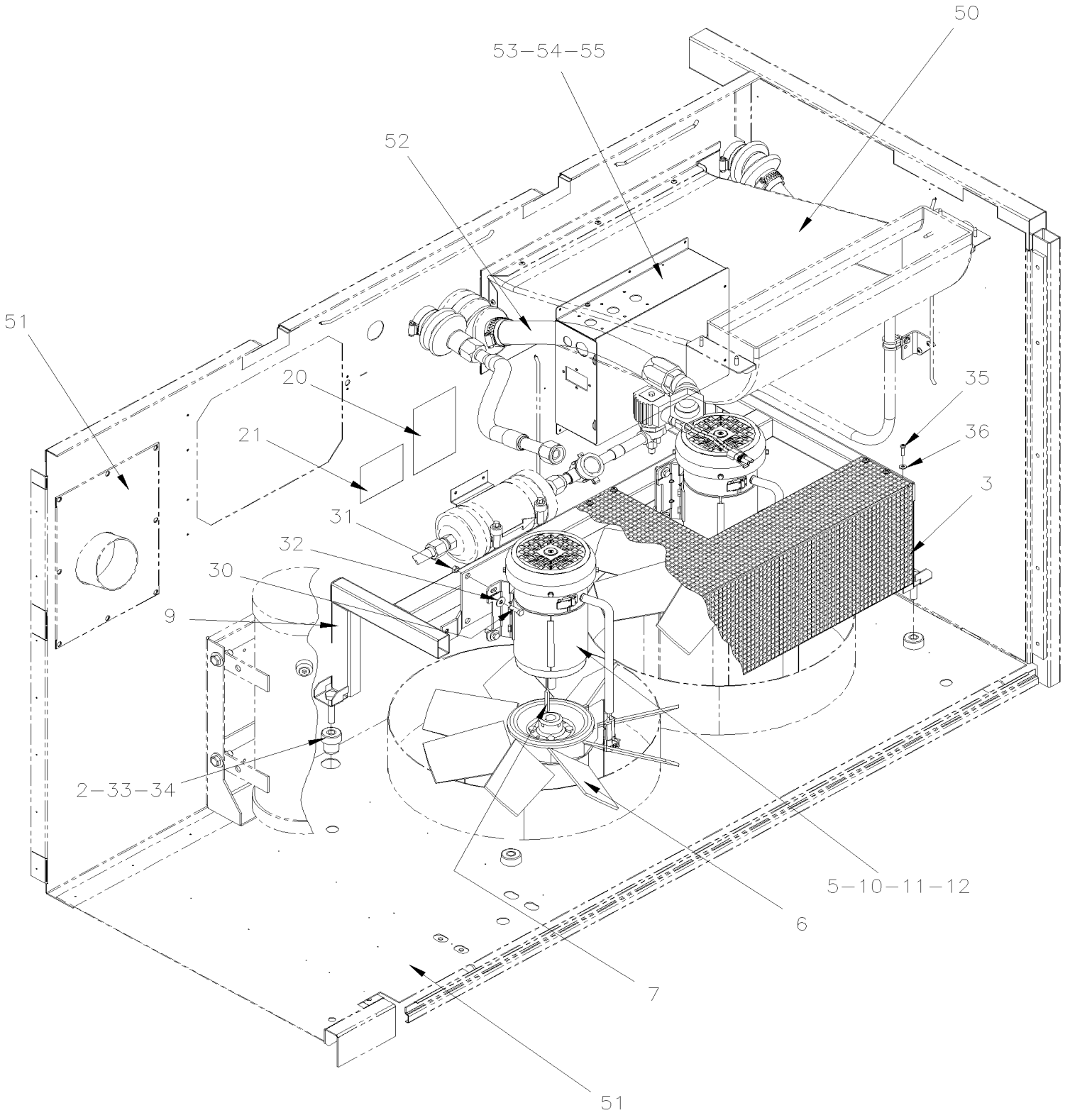

From Y-7046 To 8-9339		Date:07/2024	PAGE:Y2-2260-05

CONDENSOR FAN - INSTALLATION

Item#	Part	Description	XLII 45	XLII MTH40	XLII MTH45	XLII MTH45E	NOTES
2	510342	INSULATOR, RUBBER MOUNT	4	4	4	4	
3	452929	PROTECTOR GRILL	1	1	1	1	
5	**Y2-2265-50**	**MOTOR - CONDENSOR - "PREVOST" - TF-12 To 2-7825**					
5	**Y2-2265-51**	**MOTOR - CONDENSOR - "PREVOST" - T11G From 2-7826 To 6-8855**					
5	**Y2-2265-52**	**MOTOR - CONDENSOR - "PREVOST" - T114 From 6-8856**					
5	**Y2-2265-53**	**MOTOR - CONDENSOR BRUSHLESS From RETROFIT**					
6	372612	FAN BLADE AXIAL 8 BLADES / 16"	2	2	2	2	
7	452069	KEY	2	2	2	2	
9	452898	FAN MOTOR SUPPORT	1	1	1	1	
9	453618	FAN MOTOR SUPPORT	1	1	1	1	
10	452011	PROTECTOR MOTOR COVER PLASTIC To 6-8855	2	2	2	2	
11	502568	SCREW MA PAN PH M6-1.0x20 EMN To 6-8855	4	4	4	4	
12	500468	WASHER FL .281x1.250x.065 Z050 To 6-8855	4	4	4	4	
20	402792	DECAL / "DANGER" SHUT DOWN A/C BEFORE SERVI. / ENGLISH & FRANCAIS	1	1	1	1	
20	405637	DECAL / "DANGER" SHUT DOWN A/C BEFORE SERVI. / ENGLISH & SPANISH	1	1	1	1	
21	453066	DECAL R134A / NOMINAL CHARGE 24 LBS / / ENGLISH & FRANCAIS	1	1	1	1	
21	454180	DECAL R134A / NOMINAL CHARGE 24 LBS / / ENGLISH & SPANISH	1	1	1	1	
30	502830	SCREW CAP HEX M6-1.0x20 G8.8 N500	8	8	8	8	
31	502860	NUT HEX STO M6-1.0 N500	8	8	8	8	
32	500411	WASHER FL .260x.697x.050 SS	8	8	8	8	
33	502859	NUT HEX NYRT M10-1.5 N500	8	8	8	8	
34	500897	WASHER FL .437x1.000x.083 N500	1	1	1	1	
35	500623	SCREW TC PAN PH #10-24x3/4 N500	10	10	10	10	
36	5001137	WASHER FL .203x.438x.050 SS	10	10	10	10	
50	**Y2-2220-00**	**UNDER FLOOR AIR DUCTING To 7-9095**					
50	**Y2-2220-01**	**UNDER FLOOR AIR DUCTING From 7-9096**					
51	**Y2-1865-20**	**EVAPORATOR & CONDENSOR WALL**					
52	**Y2-2270-00**	**RECEIVER TANK & FILTER DRYER**					
53	**Y2-0621-00**	**A/C JUNCTION BOX ASSY To 7-9095**					
53	**Y2-0621-50**	**A/C CONDENSOR MOTOR RELAY From 7-9096**					
54	063211	CABLE ASSY	1	1	1	1	
55	064383	CABLE ASSY / TO A/C PRESSURE SWITCH	1	1	1	1	
NS	504397	GROMMET / .750x1.062x.062x.375x1.375	1	1	1	1	
NS	504398	GROMMET / 1.000x1.375x.062x.437x1.750	1	1	1	1	
NS	680096	SEALANT BUTYL ALUM / GREY / 310ml CARTRIDGE	1	1	1	1	
NS	500658	SCREW TC PAN PH #10-24x3/4 Z050	4	4	4	4	

From Y-7046 To 8-9339		Date:07/2024	PAGE:Y2-2260-99
CONDENSOR 4 FANS - INSTALLATION / "RETROFIT"			

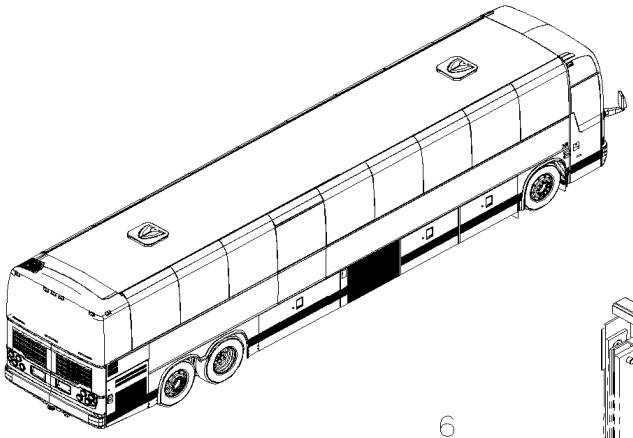

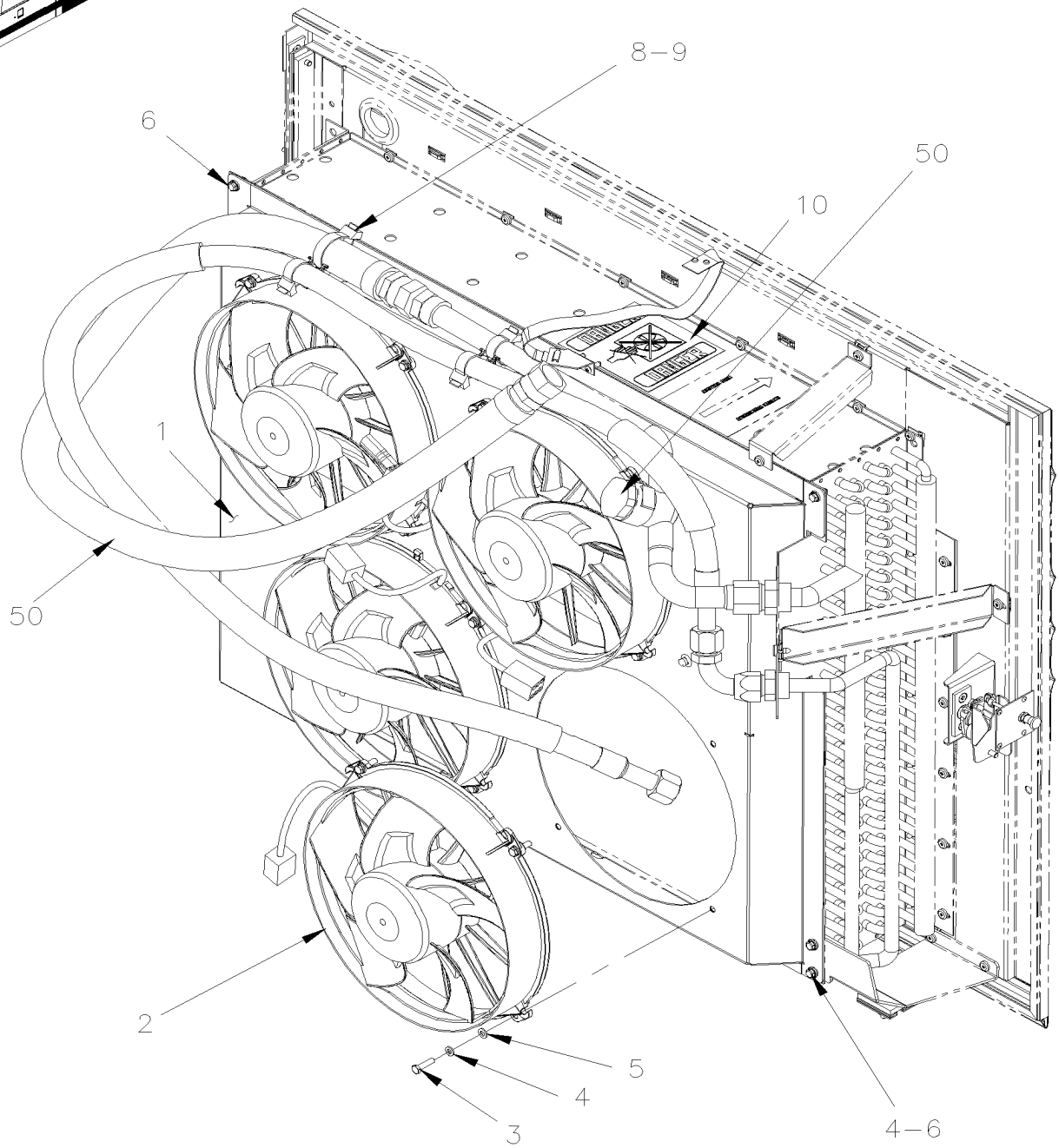

From Y-7046 To 8-9339		Date:07/2024	PAGE:Y2-2260-99

CONDENSOR 4 FANS - INSTALLATION / "RETROFIT"

Item#	Part	Description	XLII 45	XLII MTH40	XLII MTH45	XLII MTH45E	NOTES
		THIS LIST ARE FOR REFERENCE ONLY					
		"WARNING" - "WARNING" - "WARNING"					
		KEEP HOSE APPART WHEN DOOR IS CLOSE					
		TO PREVENT FRICTION BETWEEN HOSES					
1	454264	SHROUD FAN	1				B
1	455153	SHROUD FAN		1	1	1	
2	563461	CONDENSOR FAN ASSY 24V	4	4	4	4	
. NS	563691	. CONNECTOR / JUNIOR POWER TIMER / SH 6C / AMP 1-963212-1	1	1	1	1	
2	565881	CONDENSOR FAN ASSY 24V	4	4	4	4	
. NS	563691	. CONNECTOR / JUNIOR POWER TIMER / SH 6C / AMP 1-963212-1	1	1	1	1	
3	5001433	SCREW CAP HEX M6-1.0x25 SS	18	18	18	18	
4	502570	WASHER LO SPT 6.1x11.8x1.6 SS	20	20	20	20	
5	502573	WASHER FL 6.4x12.5x1.6 SS	18	18	18	18	
6	5001730	SCREW CAP HEXF M6-1.0x16 G10.9 N500	5	5	5	5	
NS	5001654	WASHER FL 6.4x17.0x3.0 SS	3	3	3	3	
NS	5001182	NUT HEX NYRT M6-1.0 SS	3	3	3	3	
7	509815	TIE MOUNT / ATTACHMENT W/TREE MOUNT	4	4	4	4	
8	509490	ATTACHMENT DOUBLE USE WITH CABLE TIE	2	2	2	2	
9	509491	CABLE TIE / 13MM x 383MM	4	4	4	4	
10	402792	DECAL / "DANGER" SHUT DOWN A/C BEFORE SERVI. / ENGLISH & FRANCAIS	1	1	1	1	
10	405637	DECAL / "DANGER" SHUT DOWN A/C BEFORE SERVI. / ENGLISH & SPANISH	1	1	1	1	
10	370357	DECAL "CLEAN REGULARY"	1	1	1	1	
11	066875	CABLE RJB TO CONDENSOR FANS & FUEL SENSOR	1	1	1	1	A
11	563691	. CONNECTOR / JUNIOR POWER TIMER / SH 6C / AMP 1-963212-1	4	4	4	4	
11	563692	. SOCKET TERMINAL / 20-16 / AMP 964285-2	24	24	24	24	
11	562590	. WIRE CABLE 18 / RED / TXL	AR	AR	AR	AR	
11	562587	. WIRE CABLE 18 / BLACK / TXL	AR	AR	AR	AR	
49	504751	ROTATIF SPACER DOUBLE / SMALL	AR	AR	AR	AR	
49	504752	ROTATIF SPACER DOUBLE / LARGE	AR	AR	AR	AR	
50	**Y2-2270-00**	**RECEIVER TANK & FILTER DRYER**					
		A) WITH THIS CABLE YOU MAY BE USE ONLY FANS MOTORS SECTIONS OR ORDER CONNECTORS BELOW SEPARATELY					
		B) FOR BUS XL-45 YOU RQUIRE TO BE CUT IN CENTER WITH OVERLAPS 47MM WITH RIVETS ON TOTAL LENGTH					

From Y-7046 To 4-8212		Date:07/2024	PAGE:Y2-2265-00
MOTOR - EVAPORATOR - "PREVOST" - T-17			

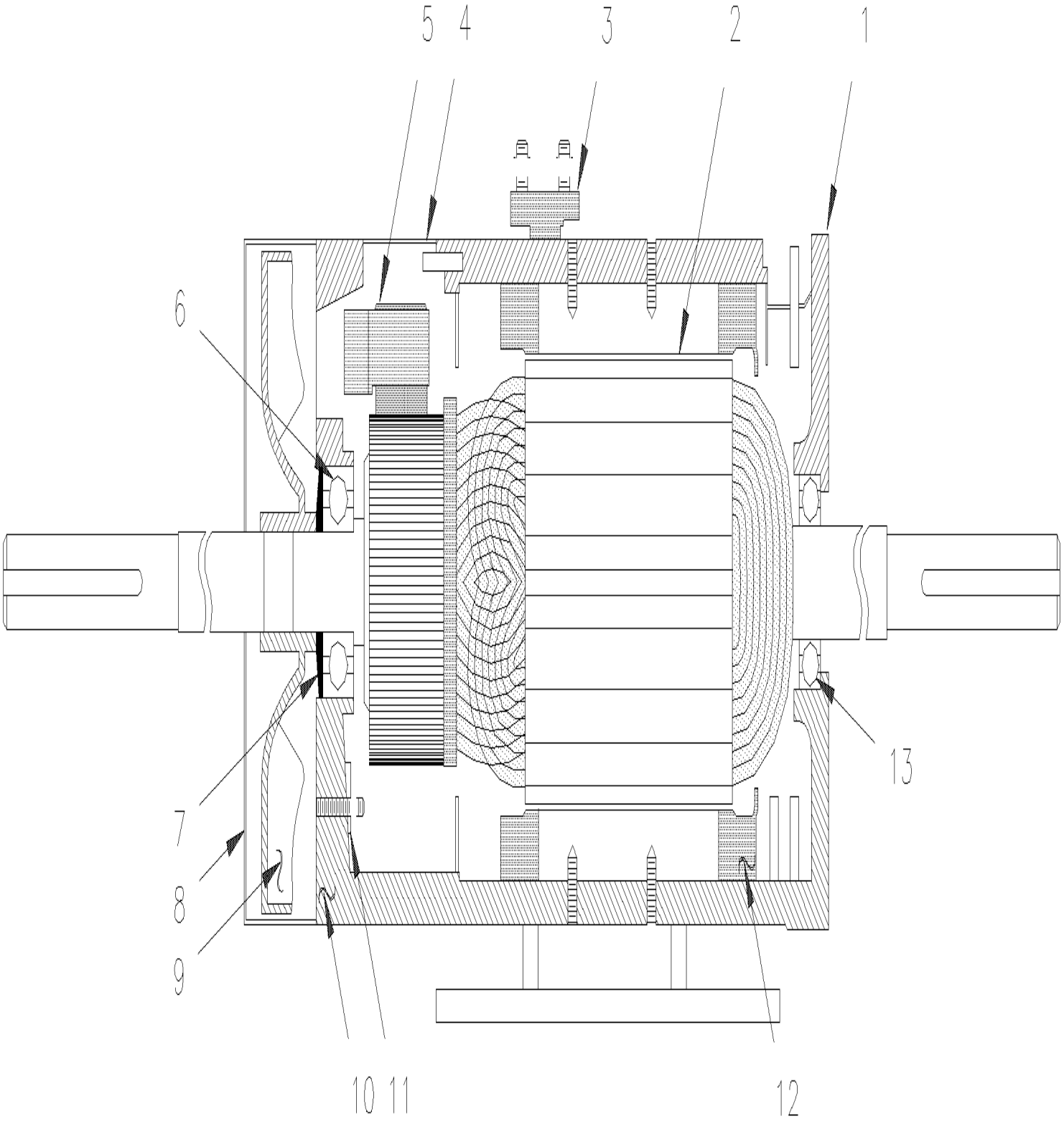

From Y-7046 To 4-8212		Date:07/2024	PAGE:Y2-2265-00

MOTOR - EVAPORATOR - "PREVOST" - T-17

Item#	Part	Description	XLII 45	XLII MTH40	XLII MTH45	XLII MTH45E	NOTES
	562374	MOTOR "PREVOST" / 1.5 HP / 1750 RPM To 3-8101	1				
	562374	MOTOR "PREVOST" / 1.5 HP / 1750 RPM		1	1	1	
1	562523	. COVER	1	1	1	1	
2	562524	. ARMATURE MOTOR	1	1	1	1	
3	561209	. BLOCK TERMINAL	1	1	1	1	
. NS	502543	. . NUT HEX M8-1.25 Z050	2	2	2	2	
. NS	500874	. . WASHER FL 8.4x17.0x1.6 Z050	2	2	2	2	
. NS	500588	. . SCREW CAP HEX M4-0.7x20 G8.8 Z050	2	2	2	2	
. NS	500438	. . WASHER FL .187x.437x.050 Z050	2	2	2	2	
4	562527	. GRILLE PROTECTOR	1	1	1	1	
5	562951	. BRUSH	1	1	1	1	
6	562520	. BALL BEARING	1	1	1	1	
7	561211	. WASHER SPRING	1	1	1	1	
8	562521	. COVER / FAN END	1	1	1	1	
9	562526	. FAN	1	1	1	1	
10	562522	. COVER / COMMUTATOR END	1	1	1	1	
11	561208	. BRUSH HOLDER ASSY / W/SPRING	1	1	1	1	
11	562546	. . SPRING, TORSION / .750 O.D. x .322 x .020	4	4	4	4	
12	562528	. STATOR WOUND / COMPLETE	1	1	1	1	
13	561210	. BALL BEARING	2	2	2	2	
NS	453830	KIT, SERVICE, REMPLACEMENT BRUSH MOTOR	1	1	1	1	
. NS	IS-05903	. SEE INSTRUCTION SHEET	1	1	1	1	
. NS	562951	. BRUSH	4	4	4	4	
. NS	680309	. HONING / STONE (FOR CLEAN COMMUTATOR)	2	2	2	2	

From 3-8102 To 8-9339		Date:07/2024	PAGE:Y2-2265-01
MOTOR - EVAPORATOR - "PREVOST" - T-17 - 2 SPEEDS			

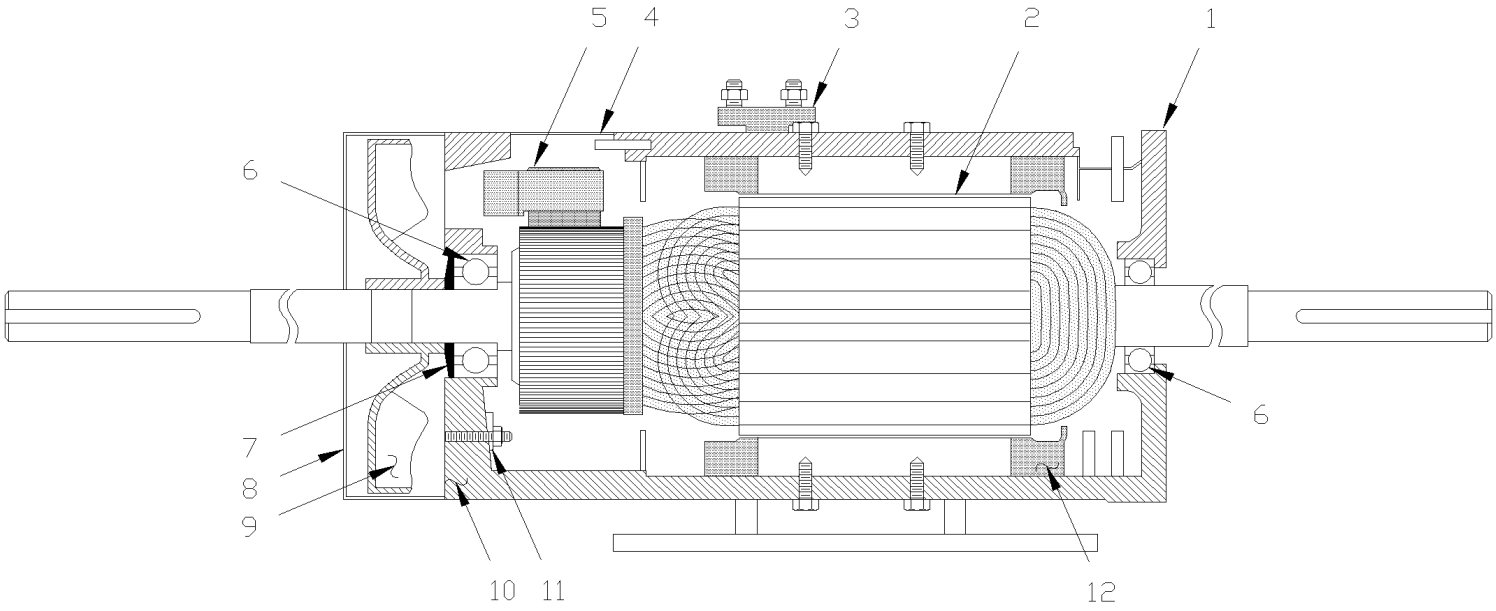

From 3-8102 To 8-9339		Date:07/2024	PAGE:Y2-2265-01

MOTOR - EVAPORATOR - "PREVOST" - T-17 - 2 SPEEDS

Item#	Part	Description	XLII 45	XLII MTH40	XLII MTH45	XLII MTH45E	NOTES
	563008	MOTOR "PREVOST" / 2.1 HP / 1400 & 1880 RPM / (STAMPED T-17)	1				
	563008	MOTOR "PREVOST" / 2.1 HP / 1400 & 1880 RPM / (STAMPED T-17) From 4-8213		1	1	1	
1	563079	. COVER	1	1	1	1	
2	563077	. ARMATURE MOTOR	1	1	1	1	
3	563122	. BLOCK, RECEPTACLE	1	1	1	1	
4	562527	. GRILLE PROTECTOR	1	1	1	1	
5	562951	. BRUSH	4	4	4	4	
6	561210	. BALL BEARING	2	2	2	2	
7	561211	. WASHER SPRING	1	1	1	1	
8	562521	. COVER / FAN END	1	1	1	1	
9	562526	. FAN	1	1	1	1	
10	563078	. COVER / COMMUTATOR END	1	1	1	1	
11	563081	. BRUSH HOLDER ASSY / W/SPRING	1	1	1	1	
11	562546	. . SPRING, TORSION / .750 O.D. x .322 x .020	4	4	4	4	
12	563080	. STATOR WOUND / COMPLETE	1	1	1	1	
NS	453830	KIT, SERVICE, REMPLACEMENT BRUSH MOTOR	1	1	1	1	
. NS	IS-05903	. SEE INSTRUCTION SHEET	1	1	1	1	
. NS	562951	. BRUSH	4	4	4	4	
. NS	680309	. HONING / STONE (FOR CLEAN COMMUTATOR)	2	2	2	2	
50	066754	KIT, SERVICE, MOTOR T17 REPLACEMENT MTH From 4-8200 To 4-8227		1	1	1	
. NS	IS-02050A	. SEE INSTRUCTION SHEET From 4-8200 To 4-8227		1	1	1	
51	066714	. BUS BAR 100MM From 4-8200 To 4-8227		1	1	1	

From Y-7046 To 6-8906		Date:07/2024	PAGE:Y2-2265-02
MOTOR - EVAPORATOR BRUSHLESS			

NOTE.: IN REPLACEMENT OF FORMER MOTOR MODEL YOU REQUIRE THOSE PARTS
TO MODIFIED ITEM # 23 ONE OF EACH (561577,561578, 561786 & 563623)

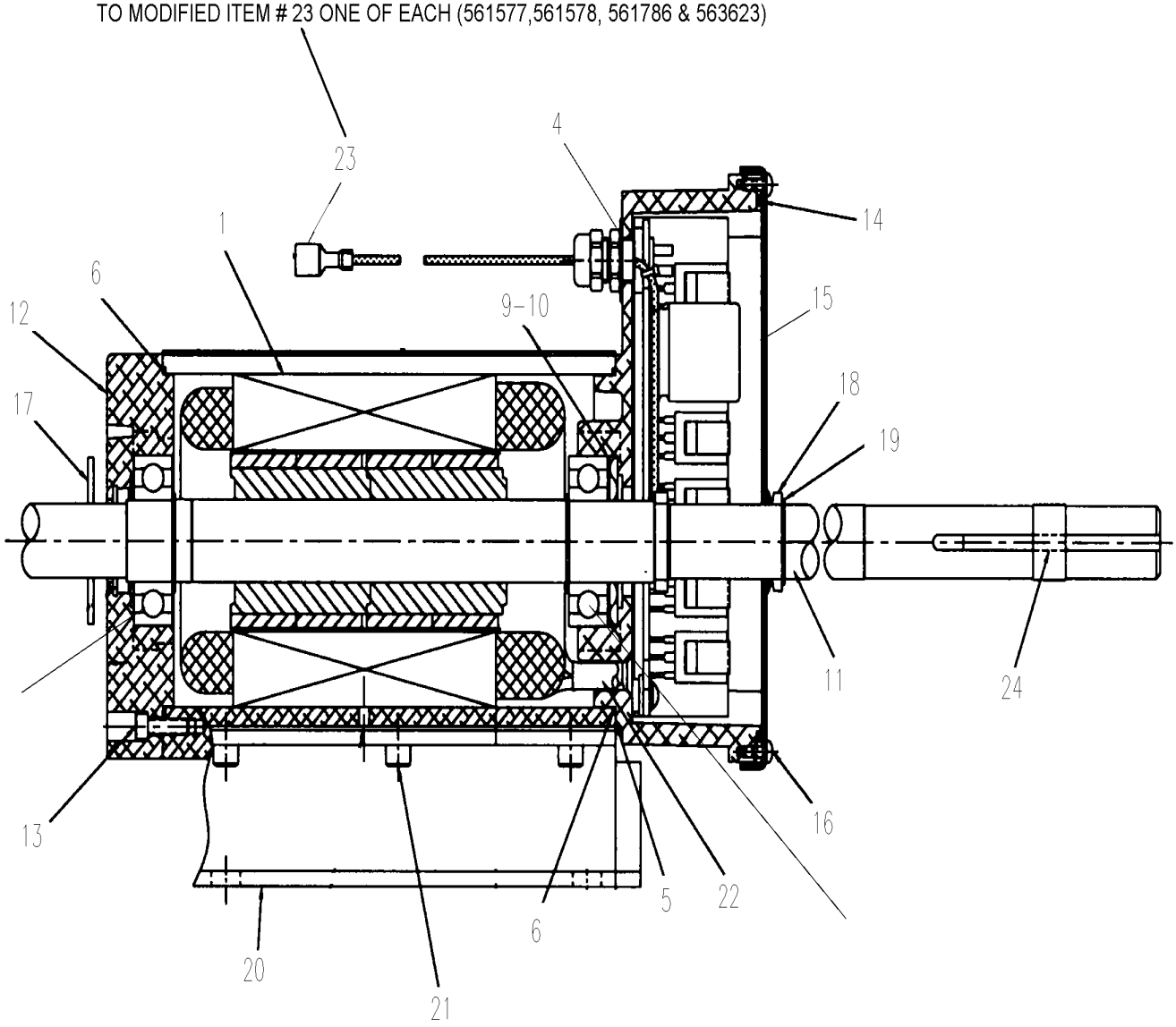

From Y-7046 To 6-8906		Date:07/2024	PAGE:Y2-2265-02

MOTOR - EVAPORATOR BRUSHLESS

Item#	Part	Description	XLII 45	XLII MTH40	XLII MTH45	XLII MTH45E	NOTES
	563586	MOTOR EVAPORATOR BRUSHLESS / (E-50348-0A)	1				S
	564216	MOTOR EVAPORATOR BRUSHLESS / 2 SPEEDS	1				
		"WARNING" - "WARNING" -"WARNING" - "WARNING"					
		THE FOLLOWING PARTS NUMBER ARE NOT					
		"PREVOST" NUMBER AND IT NOT IN S.A.P. SYSTEM					
		THEY ARE O.E.M. MFG NUMBER					
1	Call order desk	. MOTOR ASSY / COMPLETE	1				P
4	564621	. CONTROLLER ASSEMBLY	1				
5	Call order desk	. GASKET	1				P
6	Call order desk	. O-RING 3.989" x .070"	1				P
7	Call order desk	. SCREW MA PAN 8-32 x ?	1				P
8	Call order desk	. HEAT-SHRINK TUBING	1				P
9	Call order desk	. WAVE SPRING	1				P
10	Call order desk	. SHIM	1				P
11	Call order desk	. SHAFT / ROTOR ASSY W/KEYS	1				P
12	Call order desk	. ENDBELL	1				P
13	Call order desk	. SCREW MA PAN 8-32 x .875"	1				P
14	Call order desk	. O-RING SEAL	1				P
15	Call order desk	. COVER	1				P
16	Call order desk	. SCREW MA PAN #6-32	1				P
17	Call order desk	. SLINGER	1				P
18	Call order desk	. V-SEAL	1				P
19	Call order desk	. EXTERNAL RETAINING RING	1				P
20	Call order desk	. BASE PLATE	1				P
21	Call order desk	. SCREW CAP HEXS 1/4-20 x ?	1				P
22	Call order desk	. TUBING	1				P
23	Call order desk	. TERMINAL (0.032 X 0.25)	1				P
24	Call order desk	. KEY SQUARE 3/16" x 3"	1				P
30	032937	KIT / SHAFT SHIELD	1				S
. NS	033188	. SHIELD / SHAFT	1				S
. NS	500443	. SCREW TP PAN PH #8x1/2 N500	5				S
. NS	IS-10125	. SEE INSTRUCTION SHEET	1				S
		S) USE WITH OLD MOTOR 563586 WITHOUT SEAL ON THE SHAFT					
		P) CALL ORDER DESK FOR SPECIFIC APPLICATION (V.I.N.)					

From Y-7046 To 2-7825		Date:07/2024	PAGE:Y2-2265-50
MOTOR - CONDENSOR - "PREVOST" - TF-12			

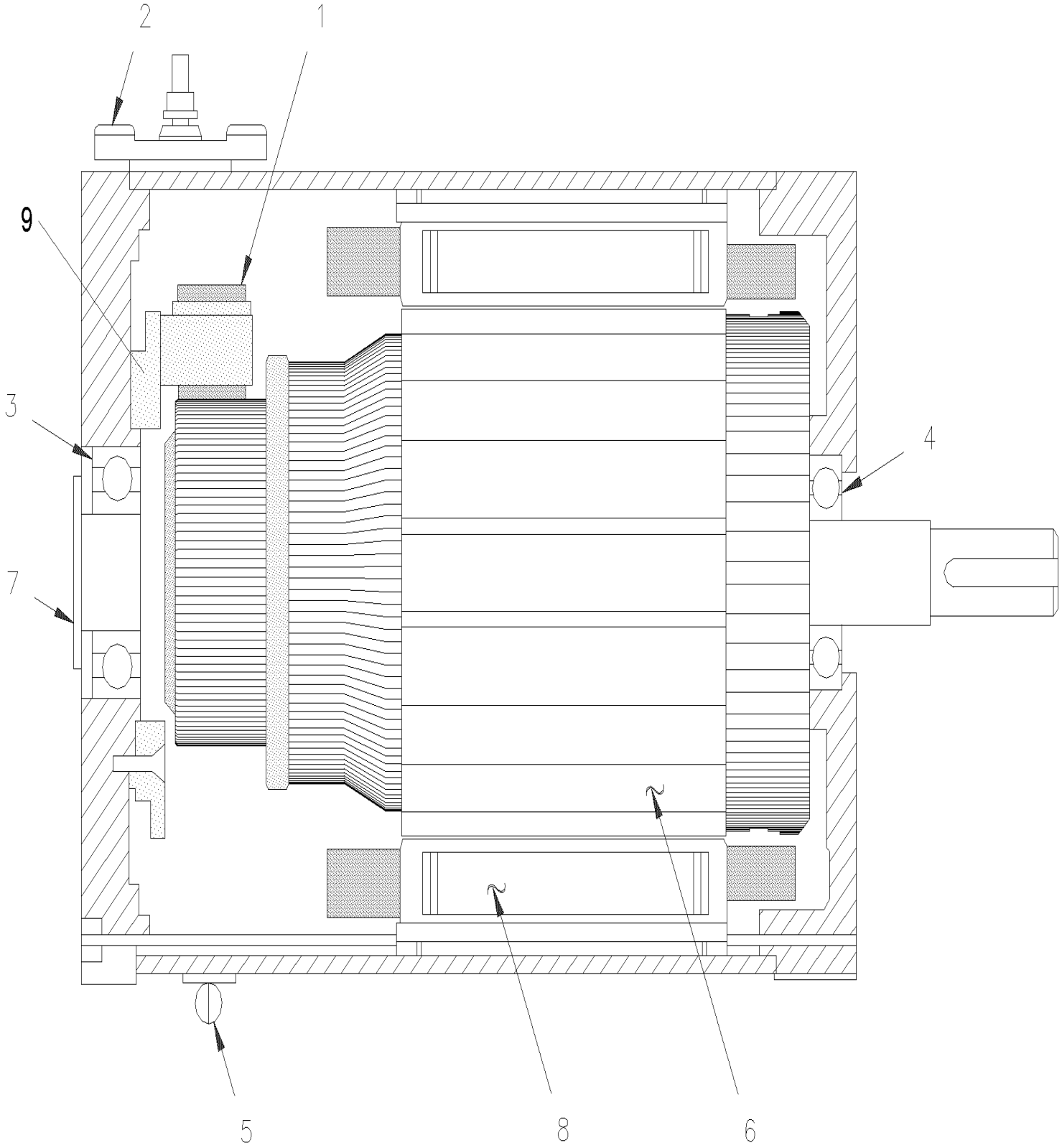

From Y-7046 To 2-7825		Date:07/2024	PAGE:Y2-2265-50

MOTOR - CONDENSOR - "PREVOST" - TF-12

Item#	Part	Description	XLII 45	XLII MTH40	XLII MTH45	XLII MTH45E	NOTES
	562579	MOTOR / .57 HP / 1950 RPM / MODEL TF-12 / W/2" SHAFT	2	2		2	A
1	561914	. BRUSH	4	4		4	
2	561913	. BOARD, TERMINAL	1	1		1	
NS	502581	. NUT HEX M6-1.0 Z050	2	2		2	
3	507226	. BALL BEARING	1	1		1	
4	507308	. BALL BEARING	1	1		1	
5	562097	. STRAP ASSY W/HOOK	1	1		1	
6	563119	. ARMATURE / TF12 / W/2" SHAFT	1	1		1	
7	562653	. CAP PROTECTOR	1	1		1	
8	563121	. FIELD COIL ASSY	2	2		2	
9	563072	. COVER ASSY / WITH BRUSH HOLDER	1	1		1	
NS	562545	. . SPRING, TORSION / .875 O.D. x .317 x .0	4	4		4	
50	066644	KIT RETROFIT MOTOR T114 W/CONNECTORS / W/2" SHAFT	1	1		1	
NS	563595	PIN TERMINAL / 12-10 / PED 12052139	2	2		2	
NS	563596	SOCKET TERMINAL / 12 / PED 12065197	2	2		2	
NS	563597	CABLE SEAL / PURPLE / PED 15324990	4	4		4	
NS	563599	CAP LOCK CONNECTOR / GRAY / PED 12020833	1	1		1	
NS	563600	CONNECTOR / METRI-PACK 480 / 2C PH / PED 12052613	1	1		1	
NS	563601	CONNECTOR / METRI-PACK 480 / 2C SH / PED 12065863	1	1		1	
NS	563602	SECONDARY LOCK / METRI-PACK 480 / 2C / BLACK / PED 12059897	2	2		2	
		A) THIS MOTORS IT SUPPERSEEDED BY KIT # 066644					

From 2-7826 To 6-8855		Date:07/2024	PAGE:Y2-2265-51
MOTOR - CONDENSOR - "PREVOST" - T11G			

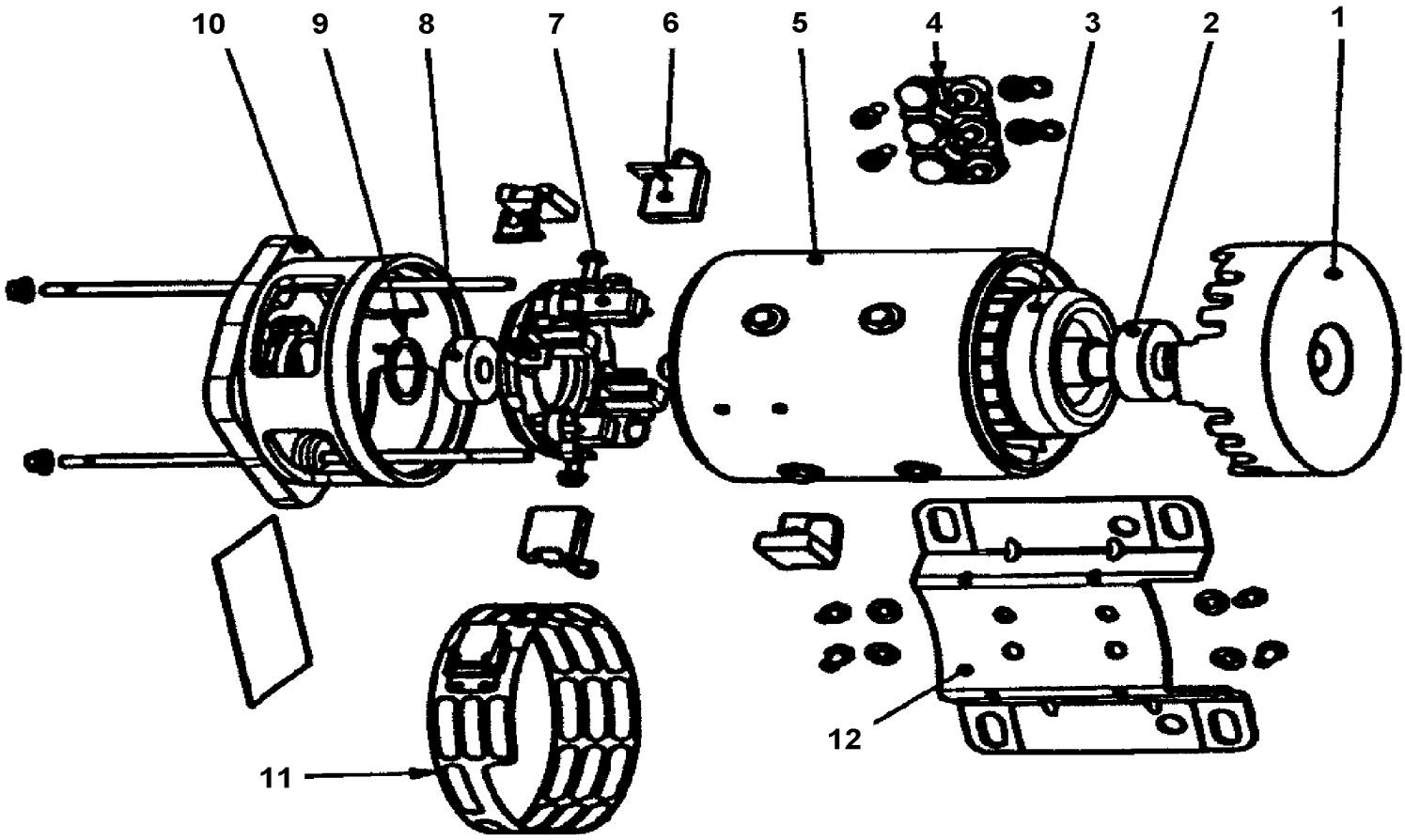

From 2-7826 To 6-8855		Date:07/2024	PAGE:Y2-2265-51

MOTOR - CONDENSOR - "PREVOST" - T11G

Item#	Part	Description	XLII 45	XLII MTH40	XLII MTH45	XLII MTH45E	NOTES
	563051	MOTOR / .57 HP / 1950 RPM / MODEL TF-11G / W/2" SHAFT	2	2	2	2	A B
1	563114	. COVER	1	1	1	1	
2	507226	. BALL BEARING	1	1	1	1	
3	563112	. ARMATURE / T11G / W/2" SHAFT	1	1	1	1	
4	563117	. BLOCK TERMINAL	1	1	1	1	
5	563110	. FIELD COIL ASSY	1	1	1	1	
6	561914	. BRUSH	4	4	4	4	
7	563111	. BRUSH HOLDER ASSY	1	1	1	1	
7	562545	. . SPRING, TORSION / .875 O.D. x .317 x .0	4	4	4	4	
8	560974	. BALL BEARING	1	1	1	1	
9	561211	. WASHER SPRING	1	1	1	1	
10	563113	. COVER COMUTATOR END	1	1	1	1	
11	563116	. GRILL PROTECTOR	1	1	1	1	
12	563115	. REMOVABLE SOCKET	1	1	1	1	
50	453625	KIT RETROFIT MOTOR / W/2" SHAFT	1	1	1	1	
. NS	IS-00051	. SEE INSTRUCTION SHEET	1	1	1	1	
50	066644	KIT RETROFIT MOTOR T114 W/CONNECTORS / W/2" SHAFT	1	1	1	1	
NS	563595	PIN TERMINAL / 12-10 / PED 12052139	2	2	2	2	
NS	563596	SOCKET TERMINAL / 12 / PED 12065197	2	2	2	2	
NS	563597	CABLE SEAL / PURPLE / PED 15324990	4	4	4	4	
NS	563599	CAP LOCK CONNECTOR / GRAY / PED 12020833	1	1	1	1	
NS	563600	CONNECTOR / METRI-PACK 480 / 2C PH / PED 12052613	1	1	1	1	
NS	563601	CONNECTOR / METRI-PACK 480 / 2C SH / PED 12065863	1	1	1	1	
NS	563602	SECONDARY LOCK / METRI-PACK 480 / 2C / BLACK / PED 12059897	2	2	2	2	
		A) THIS MOTOR IS INCLUDE IN KIT #453625					
		B) THIS MOTORS IT SUPPERSEEDED BY KIT # 066644					

From 6-8856 To 8-9339		Date:07/2024	PAGE:Y2-2265-52
MOTOR - CONDENSOR - "PREVOST" - T114			

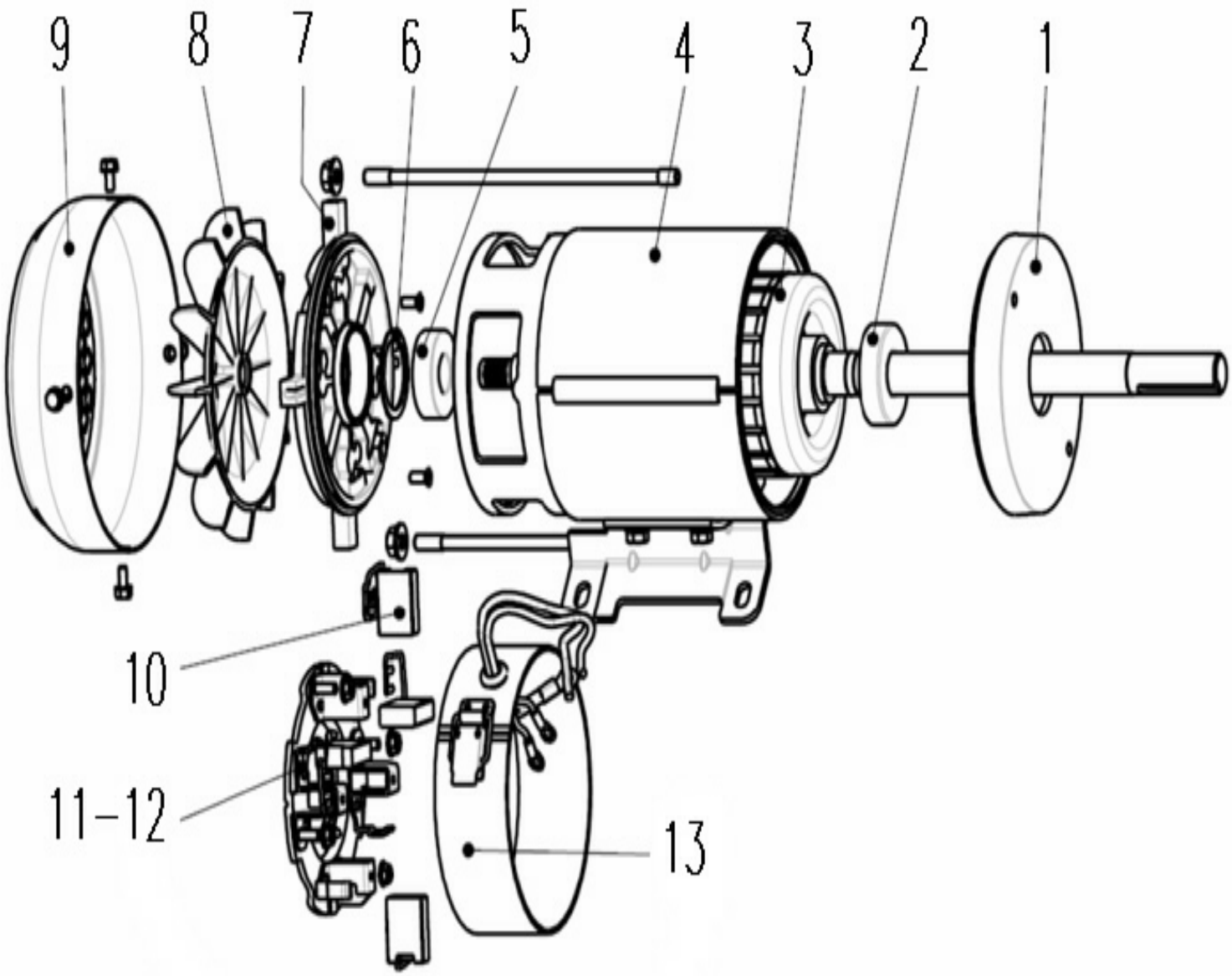

From 6-8856 To 8-9339		Date:07/2024	PAGE:Y2-2265-52

MOTOR - CONDENSOR - "PREVOST" - T114

Item#	Part	Description	XLII 45	XLII MTH40	XLII MTH45	XLII MTH45E	NOTES
	Call order desk	MOTOR / .57 HP / 1950 RPM / MODEL T114 / W/2" SHAFT & CONNECTORS	1		1	1	P
	563454	. MOTOR / .57 HP / 1950 RPM / MODEL T114 / W/2" SHAFT / US MOTOR	2		2	2	C
	560424	**. MOTOR / .57 HP / 1950 RPM / / W/2" SHAFT / SCOTT DC SERVICE**	2		2	2	C
1	563729	. . COVER					
2	560974	. . BALL BEARING	1		1	1	
3	563726	. . ARMATURE / T114 / W/2" SHAFT					
4	563727	. . PERMANENT MAGNET / ASSY W/CASE					
5	0907240	. . BALL BEARING	1		1	1	
6	N.P.N.	. . PRELOAD WASHER	1		1	1	4
7	563728	. . COVER COMMUTATOR END					
8	563730	. . FAN					
9	563732	. . COVER FAN PROTECTOR					
10	561914	. . BRUSH	4		4	4	
11	563111	. . BRUSH HOLDER ASSY	1		1	1	
12	562545	. . . SPRING, TORSION / .875 O.D. x .317 x .0	4		4	4	
13	563731	. . PROTECTOR GRILL					
NS	563595	. PIN TERMINAL / 12-10 / PED 12052139	2		2	2	
NS	563596	. SOCKET TERMINAL / 12 / PED 12065197	2		2	2	
NS	563597	. CABLE SEAL / PURPLE / PED 15324990	4		4	4	
NS	563599	. CAP LOCK CONNECTOR / GRAY / PED 12020833	1		1	1	
NS	563600	. CONNECTOR / METRI-PACK 480 / 2C PH / PED 12052613	1		1	1	
NS	563601	. CONNECTOR / METRI-PACK 480 / 2C SH / PED 12065863	1		1	1	
NS	563602	. SECONDARY LOCK / METRI-PACK 480 / 2C / BLACK / PED 12059897	2		2	2	
		C) SERVICE PARTS OF MOTOR ARE NOT INTERCHANGEBALE BETWEEN 563454 AND 560424					
		4) NO PARTS NUMBER					
		P) CALL ORDER DESK FOR SPECIFIC APPLICATION (V.I.N.)					

From 6-8856 To 8-9339		Date:07/2024	PAGE:560424
MOTOR / .57 HP / 1950 RPM / / W/2" SHAFT / SCOTT DC			

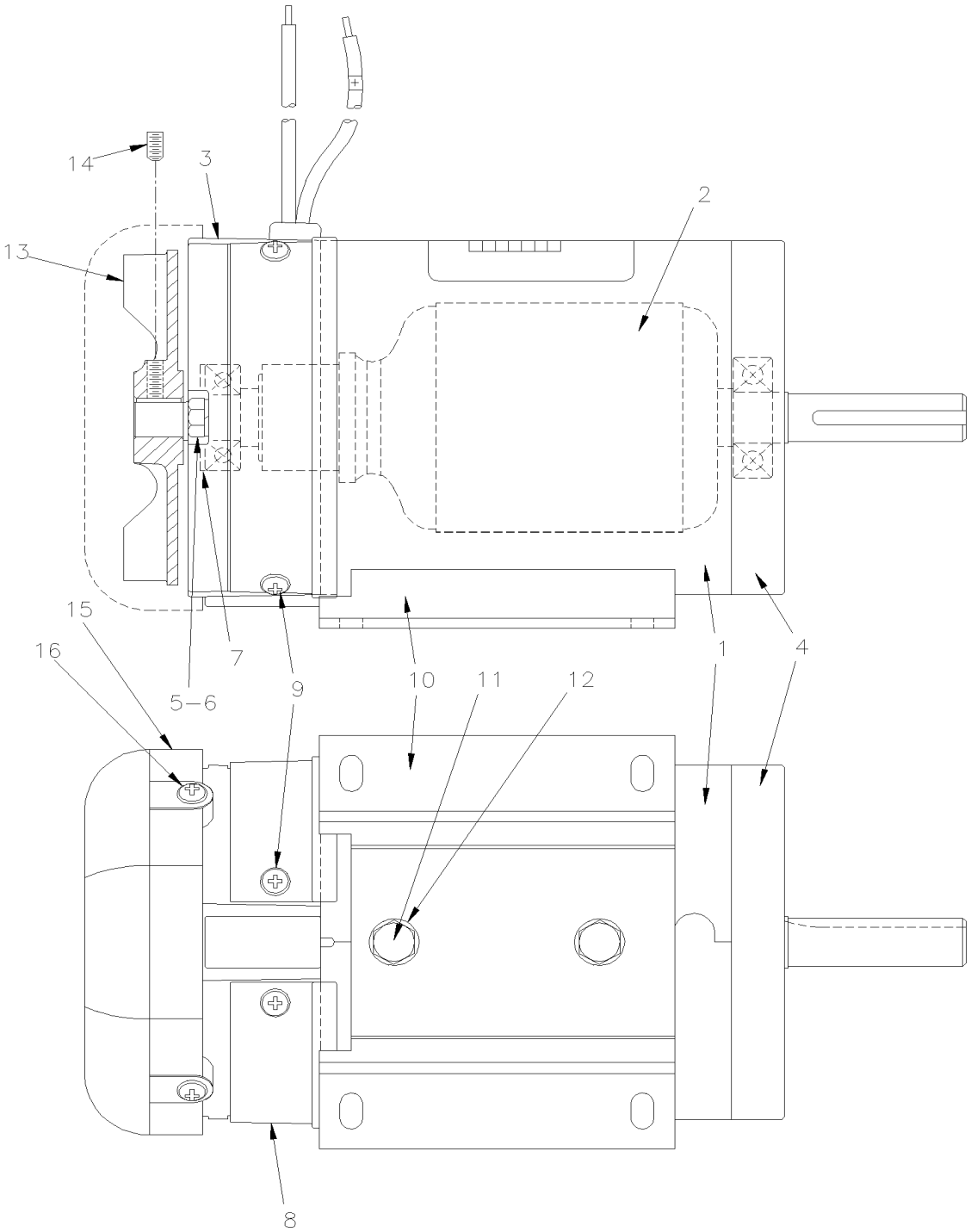

From 6-8856 To 8-9339		Date:07/2024	PAGE:560424

MOTOR / .57 HP / 1950 RPM / / W/2" SHAFT / SCOTT DC

Item#	Part	Description	XLII 45	XLII MTH40	XLII MTH45	XLII MTH45E	NOTES
1	Call order desk	FRAME ASSEMBLY	1	1	1	1	P
2	Call order desk	ARMATURE ASSEMBLY	1	1	1	1	P
3	N.S.S.	BRUSH END ASSEMBLY	1	1	1	1	1
3	560423	. BRUSH	1	1	1	1	
4	N.S.S.	DRIVE END CAP	1	1	1	1	1
5	N.S.S.	SCREW CAP HEX 1/4-20x6 3/4	2	2	2	2	1
6	N.S.S.	WASHER LOCK SPRING 1/4	2	2	2	2	1
7	N.S.S.	WASHER SPRING	1	1	1	1	1
8	N.S.S.	BRUSH ACCESS COVER	2	2	2	2	1
9	Call order desk	SCREW MA PAN PH #10-32x3/8	1	1	1	1	P
10	Call order desk	BASE	1	1	1	1	P
11	Call order desk	SCREW CAP HEX 5/16-18x1/2	2	2	2	2	P
12	Call order desk	WASHER LO INT 5/16	2	2	2	2	P
13	564886	FAN 12 BLADE ALUMINIUM, 4,38	1	1	1	1	
14	Call order desk	SCREW SET HEXS CUP #10-32x3/8	1	1	1	1	P
15	564887	FAN COVER W/VENT SLOTS	1	1	1	1	
16	Call order desk	SCREW MA PAN PH #10-32x3/4	4	4	4	4	P
		1) NOT SOLD SEPARATELY					
		P) CALL ORDER DESK FOR SPECIFIC APPLICATION (V.I.N.)					

From Y-7046 To 6-8906		Date:07/2024	PAGE:Y2-2265-53
MOTOR - CONDENSOR BRUSHLESS			

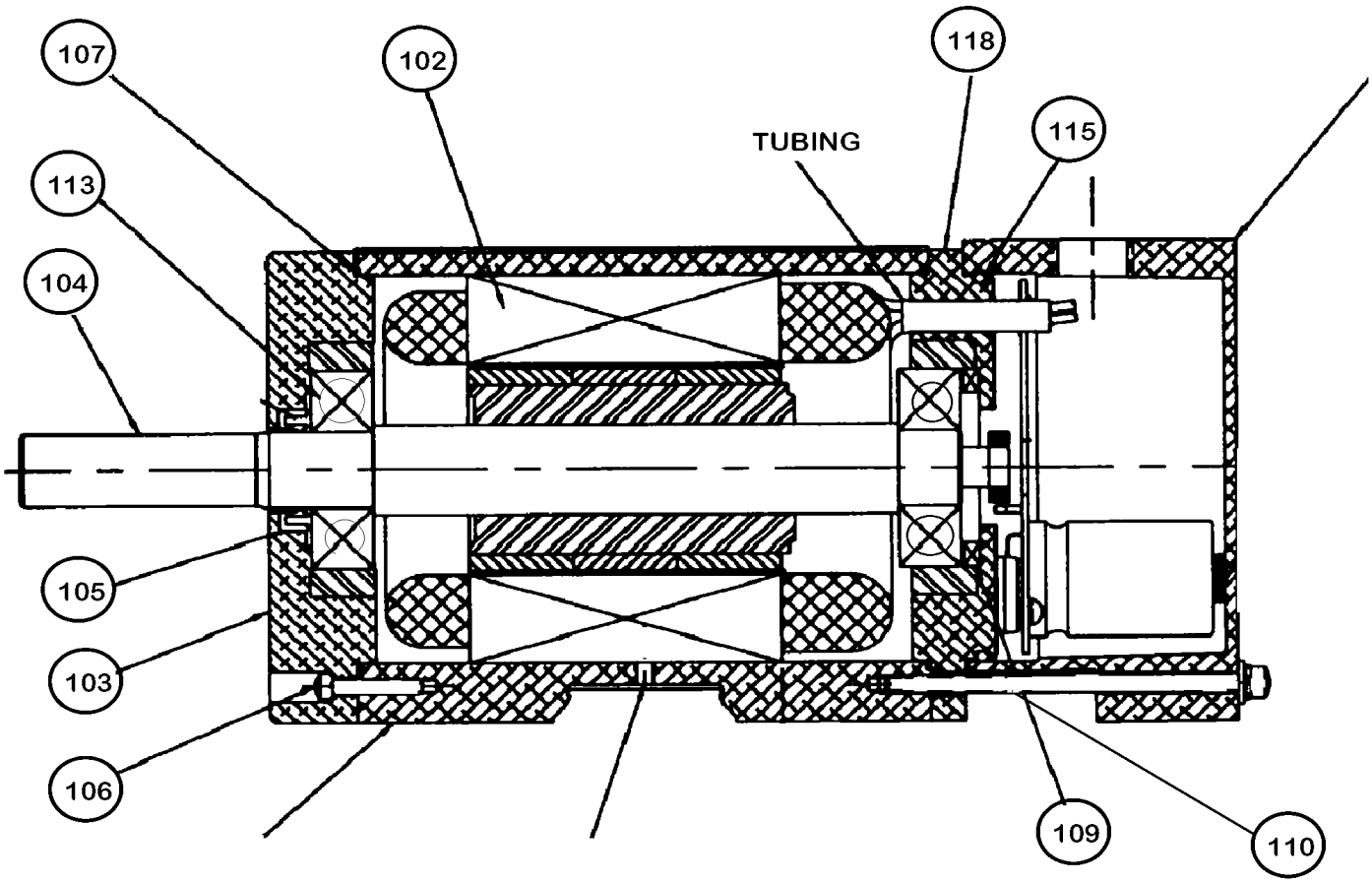

From Y-7046 To 6-8906		Date:07/2024	PAGE:Y2-2265-53
MOTOR - CONDENSOR BRUSHLESS			

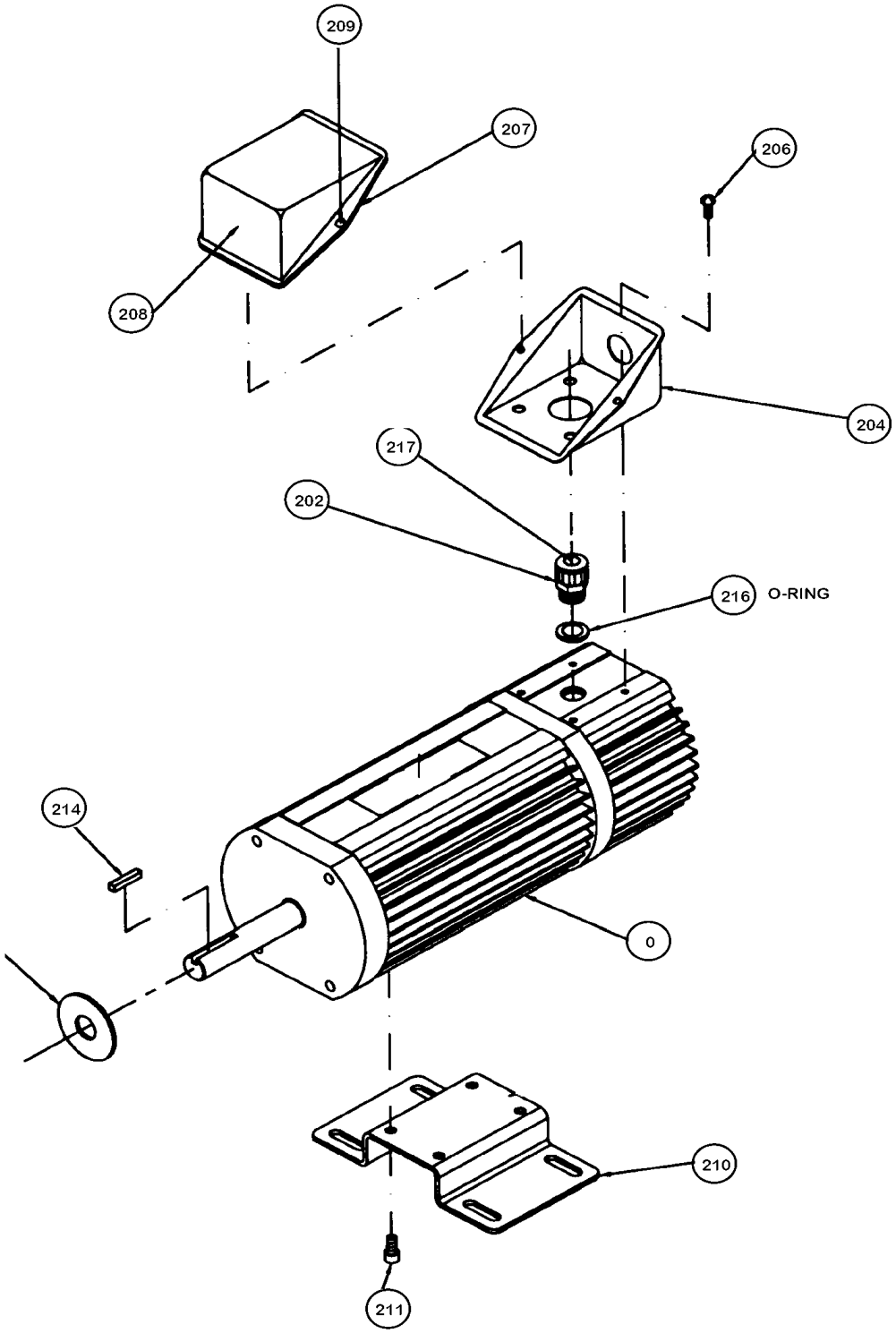

From Y-7046 To 6-8906		Date:07/2024	PAGE:Y2-2265-53

MOTOR - CONDENSOR BRUSHLESS

Item#	Part	Description	XLII 45	XLII MTH40	XLII MTH45	XLII MTH45E	NOTES
	563585	MOTOR CONDENSOR BRUSHLESS / (E-50599-0)	2	2	2	2	
102	Call order desk	. STATOR/HOUSING ASSY	1	1	1	1	P
103	Call order desk	. REAR ENDBELL	1	1	1	1	P
104	Call order desk	. SHAFT / ROTOR ASSY W/BEARING & KEY	1	1	1	1	P
105	19510465	. LIP SEAL	1	1	1	1	
106	19501109	. SCREW MA PAN 8-32 x .875"	4	4	4	4	
107	19504444	. O-RING 3.989" x .070"	2	2	2	2	
109	N8885731	. SHIM 1.56" I.D. x 2.04 O.D.	1	1	1	1	
110	N8885730	. WAVE SPRING	1	1	1	1	
113	19501284	. BEARING	2	2	2	2	
115	N8885727	. O-RING 3.737" x .103"	2	2	2	2	
116	Call order desk	. ELECTRONICS HOUSING	1	1	1	1	P
118	Call order desk	. ENDCAP / ELECTRONICS ASSY	1	1	1	1	P
120	19512159	. WASHER FLAT #10	4	4	4	4	
121	Call order desk	. WASHER LOCK #10	1	1	1	1	P
122	Call order desk	. SCREW FIL HEAD #10	1	1	1	1	P
125	Call order desk	. SCREW CAP HEXS 10-24 x .062"	1	1	1	1	P
202	Call order desk	. STRAIN-RELIEF KIT	1	1	1	1	P
204	19501285	. JUNCTION BOX / (BOTTOM HALF)	1	1	1	1	
206	Call order desk	. SCREW MA PAN 10-24	1	1	1	1	P
207	Call order desk	. GASKET JCT BOX	1	1	1	1	P
208	19501283	. JUNCTION BOX / (TOP HALF)	1	1	1	1	
209	19501282	. SCREW 6-32	2	2	2	2	
210	Call order desk	. BASE PLATE	1	1	1	1	P
211	Call order desk	. SCREW CAP HEXS 1/4-20 x ?	1	1	1	1	P
214	Call order desk	. KEY	1	1	1	1	P
		P) CALL ORDER DESK FOR SPECIFIC APPLICATION (V.I.N.)					

From Y-7046 To 8-9339		Date:07/2024	PAGE:Y2-2270-00
RECEIVER TANK & FILTER DRYER			

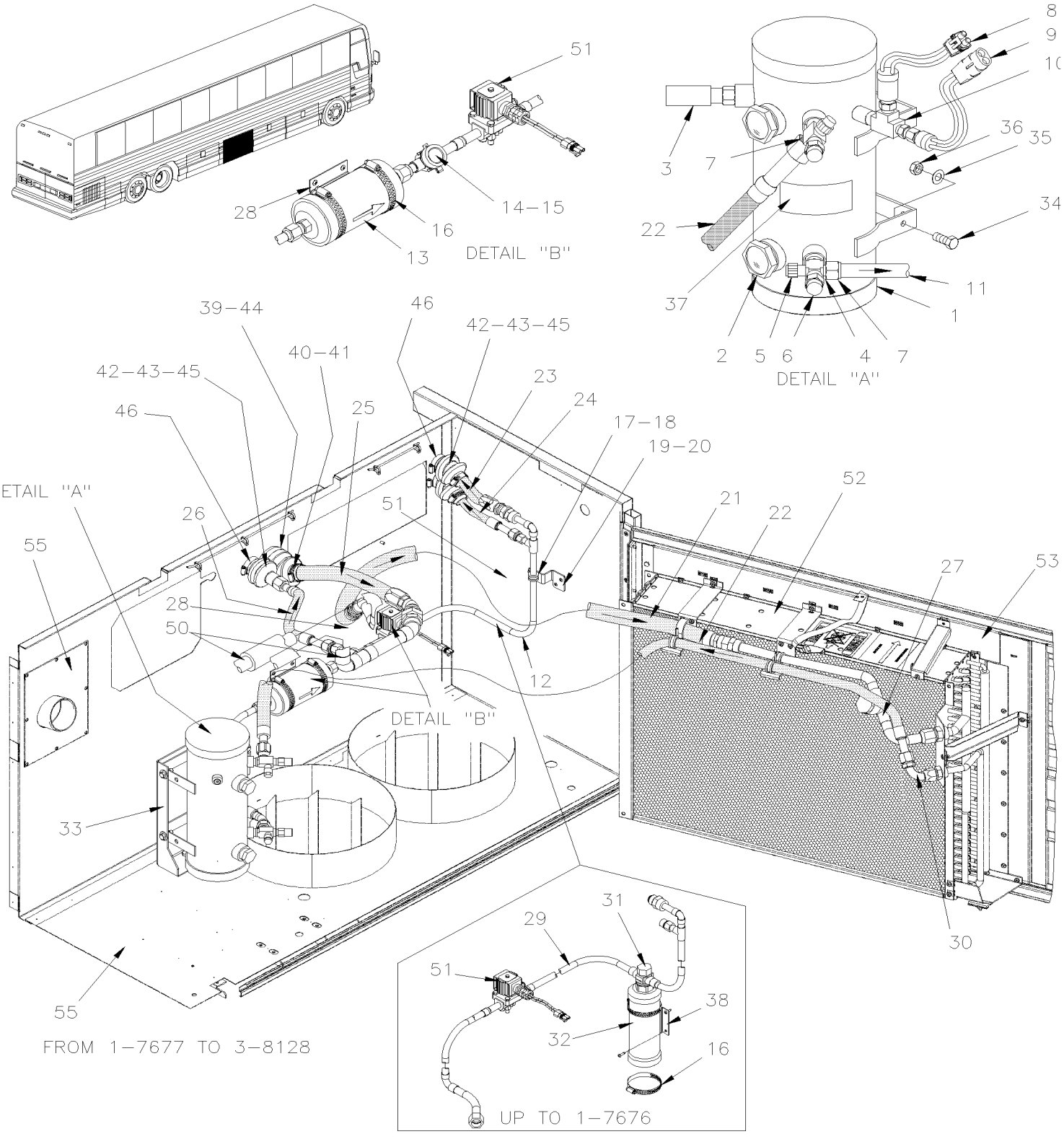

From Y-7046 To 8-9339		Date:07/2024	PAGE:Y2-2270-00
RECEIVER TANK & FILTER DRYER			

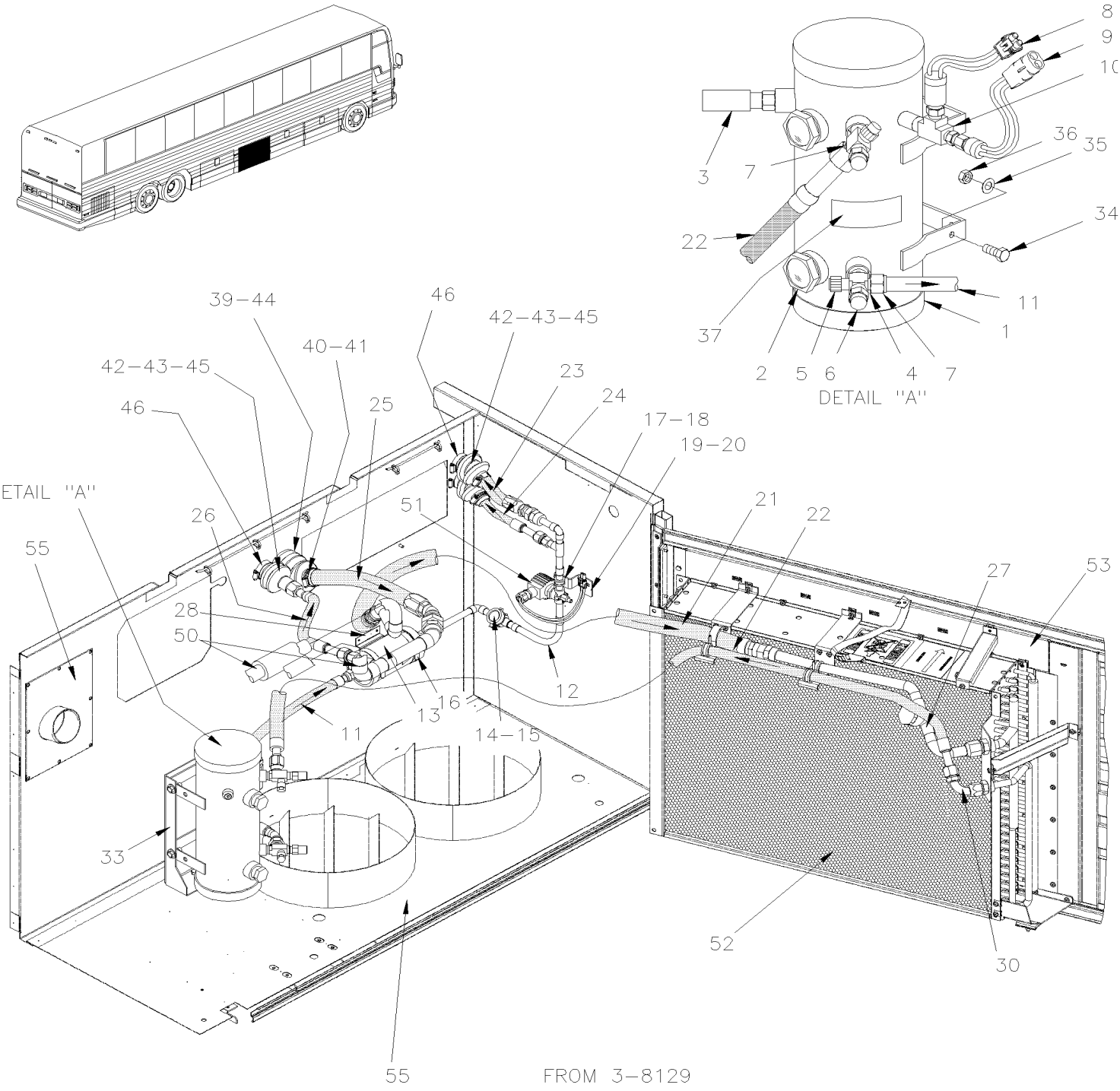

From Y-7046 To 8-9339		Date:07/2024	PAGE:Y2-2270-00

RECEIVER TANK & FILTER DRYER

Item#	Part	Description	XLII 45	XLII MTH40	XLII MTH45	XLII MTH45E	NOTES
1	950261	RECEIVER TANK ASSY	1	1	1	1	
. NS	**950428**	**. SIGHTGLASS / W/BALL 1NPT-M (FORMER)**	1	1	1	1	
. NS	**951198**	**. SIGHTGLASS / W/BALL 1 1/4NPT-F (CURRENT)**	1	1	1	1	
2	871001	. SIGHT GLASS ASSY 1 NPT	2	2	2	2	
3	870890	VALVE, SAFETY 450 PSI	1	1	1	1	
4	950228	VALVE ASSY / SERVICE / INLET & OUTLET	2	2	2	2	
. NS	950284	. CAP / PROTECTOR / FOR GAUGE	1	1	1	1	
. NS	507169	. O-RING 1/2 I.D.	1	1	1	1	
5	950285	CAP VALVE / PROTECTOR / PLASTIC	1	1	1	1	
6	950284	CAP / PROTECTOR / FOR GAUGE	1	1	1	1	
7	507169	O-RING 1/2 I.D.	2	2	2	2	
8	452832	PRESSURE SWITCH N.O. 170-130 20SP001MA170J130J	1	1	1	1	
9	062644	PRESSURE SWITCH N.O. 120-90 20SP001AA120G090E	1	1	1	1	
NS	950249	SCHRADER VALVE 1/4NPT-M	2	2	2	2	
10	501338	MALE RUN TEE / PIPE FITTING / 1/4NPT-Mx1/4NPT-Fx1/4NPT-F BR	1	1	1	1	
11	454043	HOSE ASSY / #12 565MM From 3-8129	1	1	1	1	
NS	507370	O-RING #10 From 3-8129	1	1	1	1	
12	453678P	FILTER DRYER ASSY From 1-7677 To 3-8128	1		1		
. NS	457419	. PIPE ASSY / FILTER DRIER "INLET SECTION" / RECEIVERTANK & FILTER From 1-7677 To 3-8128	1		1		
. NS	501829	. O-RING / ORS FITTING / #12 NEO From 1-7677 To 3-8128	1		1		
12	Call order desk	FILTER DRYER ASSY From 3-8129 To 4-8205	1		1		P
. NS	501829	. O-RING / ORS FITTING / #12 NEO From 3-8129 To 4-8205	1		1		
12	Call order desk	FILTER DRYER ASSY From 4-8206	1		1		P
. NS	501829	. O-RING / ORS FITTING / #12 NEO From 4-8206	1		1		
12	Call order desk	FILTER DRYER ASSY From 1-7677 To 3-8128		1		1	P
. NS	501829	. O-RING / ORS FITTING / #12 NEO From 1-7677 To 3-8128		1		1	
. NS	7771832	. TUBE ASSY From 1-7677 To 3-8128		1		1	
12	454045P	FILTER DRYER ASSY From 3-8129				1	
. NS	501829	. O-RING / ORS FITTING / #12 NEO From 3-8129				1	
13	950332	. FILTER DRYER From 1-7677	1		1	1	
. NS	507370	. . O-RING #10 From 1-7677	1		1	1	U
14	950334	. MOISTURE INDICATOR From 1-7677	1		1	1	
15	950029	. . CAP, MOISTURE INDICATOR	1		1	1	
16	504025	HOSE CLAMP / 2"5/16-3"1/4 SS / HS-44	2	2	2	2	
17	952629	CLAMP / 5/8" I.D.	1	1	1	1	
18	500588	SCREW CAP HEX M4-0.7x20 G8.8 Z050	1	1	1	1	
18	502834	WASHER LO SPT 4.1x7.6x0.9 N500	1	1	1	1	
18	500438	WASHER FL .187x.437x.050 Z050	1	1	1	1	
18	500590	NUT HEX NYRT M4-0.7 Z050	1	1	1	1	
19	452077	ANGLE SUPPORT, FILTER ASSY	1	1	1	1	
20	500957	SCREW TP BDG PH #10x3/4 N500	2	2	2	2	
21	453602	HOSE ASSY / PIPE TO COND / #16 1143MM To 1-7560	1	1	1	1	

From Y-7046 To 8-9339		Date:07/2024	PAGE:Y2-2270-00

RECEIVER TANK & FILTER DRYER

Item#	Part	Description	XLII 45	XLII MTH40	XLII MTH45	XLII MTH45E	NOTES
21	453779	HOSE ASSY / PIPE TO COND / #16 1143MM / SS BELLOW From 1-7561	1	1	1	1	
NS	501802	O-RING / ORS FITTING / #16 NEO	1	1	1	1	
NS	507169	O-RING 1/2 I.D.	1	1	1	1	
22	453048	HOSE ASSY / #12 2350MM	1				
22	453394	HOSE ASSY / #12 1830MM		1	1	1	
22	455220	HOSE ASSY / #12 1830MM SERVICE		1	1	1	S
. NS	507280	. O-RING / ORS FITTING / #12 NEO		2	2	2	S
23	453397	HOSE ASSY / #12 1340MM	1				
23	453397	HOSE ASSY / #12 1340MM To 6-8805		1	1	1	
23	454240	HOSE ASSY / #12 1579MM From 6-8806			1	1	
. NS	505182	. COIL PROTECTOR / PLASTIC / #16 From 6-8806			AR	AR	
24	453389	HOSE ASSY / #10 5970MM	1		1		
. NS	507344	. O-RING / ORS FITTING / #10 NEO	2		2		
24	455218	HOSE ASSY / #10 5970MM SERVICE	1		1		S
. NS	507344	. O-RING / ORS FITTING / #10 NEO	2		2		S
24	453488	HOSE ASSY / #10 5075MM To Y-7128		1			
. NS	507344	. O-RING / ORS FITTING / #10 NEO To Y-7128		2			
24	455251	HOSE ASSY / #10 5075MM SERVICE To Y-7128		1			S
. NS	507344	. O-RING / ORS FITTING / #10 NEO To Y-7128		2			S
24	453482	HOSE ASSY / #10 7160MM To 6-8805				1	
. NS	507344	. O-RING / ORS FITTING / #10 NEO To 6-8805				2	
24	455248	HOSE ASSY / #10 6795MM SERVICE To 6-8805				1	S
. NS	507344	. O-RING / ORS FITTING / #10 NEO To 6-8805				2	S
24	453476	HOSE ASSY / #10 5745MM From 6-8806				1	
. NS	507344	. O-RING / ORS FITTING / #10 NEO From 6-8806				2	
24	455246	HOSE ASSY / #10 5745MM SERVICE From 6-8806				1	S
. NS	507344	. O-RING / ORS FITTING / #10 NEO From 6-8806				2	S
25	453347	HOSE ASSY / #20 84"	1				
. NS	504442	. CUFF END BELLOW / 1 1/4" I.D. x 3 1/2" x 4 1/2"	1				
25	453347	HOSE ASSY / #20 84" To 6-8805			1		
. NS	504442	. CUFF END BELLOW / 1 1/4" I.D. x 3 1/2" x 4 1/2" To 6-8805			1		
25	454239	HOSE ASSY / #20 2210MM From 6-8806			1		
. NS	501803	. O-RING / ORS FITTING / #20 NEO From 6-8806			1		
25	452556	HOSE ASSY / #20 95" To 6-8805		1		1	
25	454289	HOSE ASSY / #20 95" From 6-8806				1	
26	453628	HOSE ASSY / #12 270MM	1		1		
. NS	507280	. O-RING / ORS FITTING / #12 NEO	2		2		
26	455260	HOSE ASSY / #12 270MM SERVICE	1		1		S
. NS	507280	. O-RING / ORS FITTING / #12 NEO	2		2		S
26	453702	HOSE ASSY / #12 280MM	1				W
. NS	507280	. O-RING / ORS FITTING / #12 NEO	2				W
26	455264	HOSE ASSY / #12 280MM SERVICE	1				S W

From Y-7046 To 8-9339		Date:07/2024	PAGE:Y2-2270-00

RECEIVER TANK & FILTER DRYER

Item#	Part	Description	XLII 45	XLII MTH40	XLII MTH45	XLII MTH45E	NOTES
. NS	507280	. O-RING / ORS FITTING / #12 NEO	2				S W
26	453483	HOSE ASSY / #12 385MM		1		1	
. NS	507280	. O-RING / ORS FITTING / #12 NEO		2		2	
26	455249	HOSE ASSY / #12 316MM SERVICE		1		1	S
. NS	507280	. O-RING / ORS FITTING / #12 NEO		2		2	S
27	453543	PIPE ASSY WITH CHECK VALVE From Y-7191	1				
27	453542	PIPE ASSY WITH CHECK VALVE From Y-7191		1	1	1	
28	453711	BRACKET, FILTER From 1-7677			1	1	
29	453376P	FILTER DRYER ASSY To Y-7307	1		1		
29	453597P	FILTER DRYER ASSY From Y-7308 To 1-7676	1		1		
29	Call order desk	FILTER DRYER ASSY To 1-7676		1		1	P
30	507544	SWIVEL NUT ELBOW 90º SHORT / JIC 37° FITTING/ #12JIC-Fx#12JIC-Mx1.82 STL From Y-7191			1	1	
30	501829	O-RING / ORS FITTING / #12 NEO From Y-7191			1	1	
31	870646	MOISTURE INDICATOR To 1-7676	1	1	1	1	
32	950262	FILTER DRYER ASSY / W/R134a To 1-7676	1	1	1	1	
. NS	951196	. O-RING TEFLON 1 3/8" I.D. x 1 5/8" O.D. To 1-7676	1	1	1	1	
33	454044	SUPPORT RECEIVER TANK			1	1	
34	500065	SCREW CAP HEX M10-1.5x30 G10.9 DP			4	4	
35	500897	WASHER FL .437x1.000x.083 N500			4	4	
36	5001760	NUT HEXF STO M10-1.5 G8 ZP			6	6	
37	453066	DECAL R134A / NOMINAL CHARGE 24 LBS / / ENGLISH & FRANCAIS			1	1	
37	454180	DECAL R134A / NOMINAL CHARGE 24 LBS / / ENGLISH & SPANISH			1	1	
38	452547	BRACKET, FILTER To 1-7676	1	1	1	1	
39	504442	CUFF END BELLOW / 1 1/4" I.D. x 3 1/2" x 4 1/2"			1	1	
40	504026	HOSE CLAMP / 2"13/16-3"3/4 SS / HS-52			1	1	
41	504022	HOSE CLAMP / 3/4"-1"3/4 SS / HS-20			1	1	
42	372103	PROTECTOR HOSE SPLIT / 1 1/8" O.D. x 3"			3	3	
43	504016	CABLE TIE / 5/16" X 14"1/2			AR	AR	
44	451075	PROTECTOR HOSE SPLIT / 7/8" O.D. x 3"			1	1	
45	504384	CUFF END BELLOW / 1 1/4" I.D. x 1 3/4" x 4"	3	3	3	3	
46	504024	HOSE CLAMP / 1"13/16"-2"3/4 SS / HS-36	6	6	6	6	
50	**Y2-2222-15**	**A/C LINE REAR SECTION W/05G**					
51	**Y2-2208-10**	**REFRIGERANT SOLENOID VALVE**					
52	**Y2-2255-00**	**CONDENSOR - INSTALLATION LARGE SYSTEM**					
53	**Y2-1863-00**	**CONDENSOR DOOR ASSY - BUS**					
53	**Y2-1863-50**	**CONDENSOR DOOR ASSY**					
53	**Y2-1863-51**	**CONDENSOR DOOR ASSY**					
55	**Y2-1865-20**	**EVAPORATOR & CONDENSOR WALL**					
		S) SERVICE					

From Y-7046 To 8-9339		Date:07/2024	PAGE:Y2-2270-00

RECEIVER TANK & FILTER DRYER

Item#	Part	Description	XLII 45	XLII MTH40	XLII MTH45	XLII MTH45E	NOTES
		W) WITH W.C.L.					
		P) CALL ORDER DESK FOR SPECIFIC APPLICATION (V.I.N.)					
		U) UNDER CONSTRUCTION					

		Date:07/2024	Y2-23
ACCESSORIES			

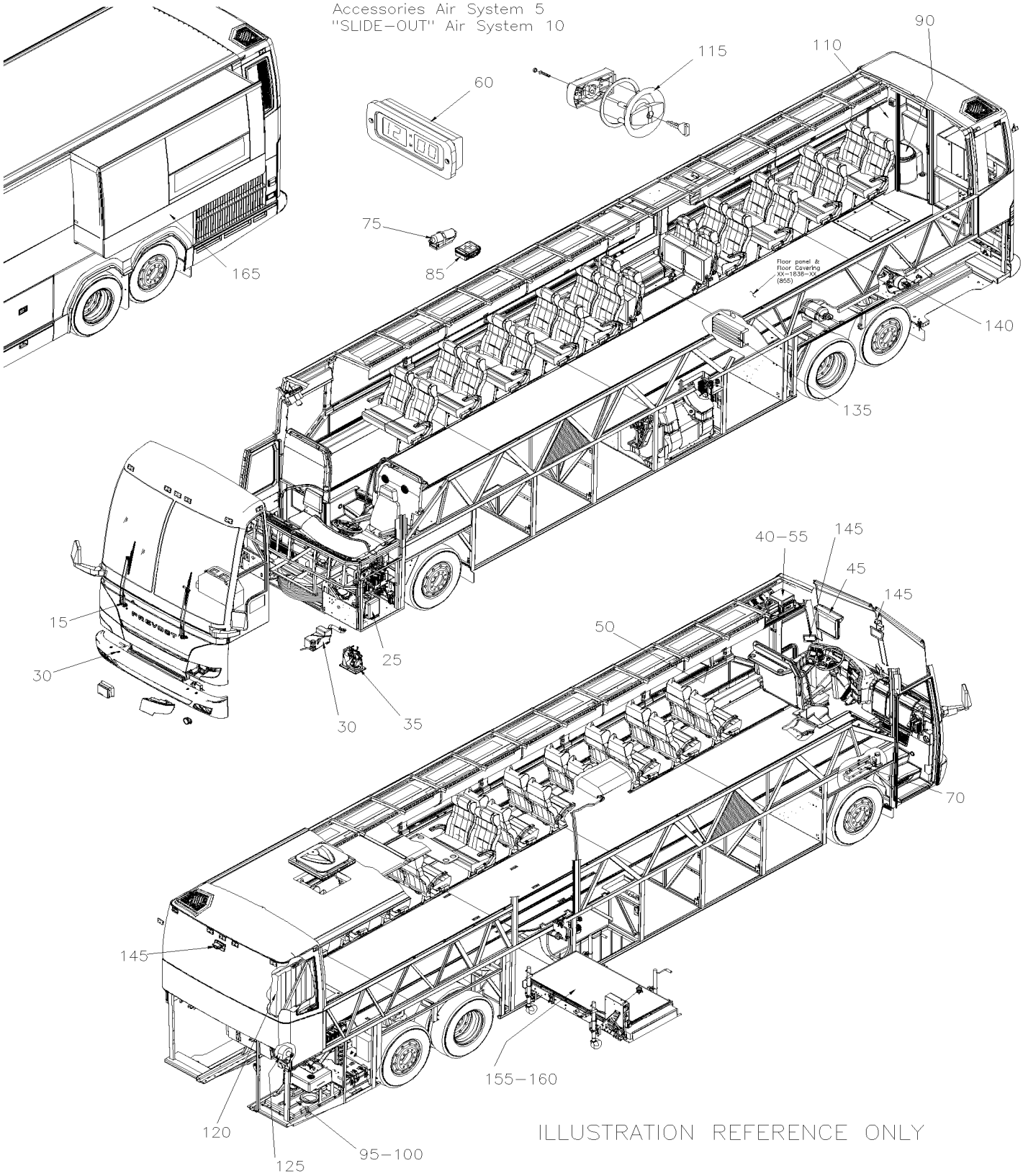

		Date:07/2024	Y2-23

ACCESSORIES

Item#	Part	Description	XLII 45	XLII MTH40	XLII MTH45	XLII MTH45E	NOTES
5	Y2-2300-00	ACCESSORIES AIR SYSTEM From Y-7046 To 7-9095					
5	Y2-2300-50	ACCESSORIES AIR SYSTEM - MTH From 7-9096 To 8-9339					
10	Y2-2300-90	"SLIDE-OUT" AIR SYSTEM From Y-7046 To 6-8805					
15	Y2-2305-00	LOWER WINDSHIELD WIPER From Y-7046 To 8-9339					
15	Y2-2305-05	LOWER WINDSHIELD WIPER - INSTALLATION From Y-7046 To 8-9339					
25	Y2-2305-20	WINDSHIELD WASHER - INSTALLATION From Y-7046 To 8-9339					
30	Y2-2305-25	HEAD LAMP CLEANING WASHER TANK From 7-9003 To 8-9339					
35	Y2-2310-00	HORN - INSTALLATION From Y-7046 To 8-9339					
40	Y2-2315-00	SOUND SYSTEM & ACCESSORIES - "R.E.I." From Y-7046 To 6-8906					
40	Y2-2315-20	INDIVIDUAL STATIONS - "R.E.I." From Y-7046 To 6-8906					
40	Y2-2315-30	SOUND SYSTEM - "KARAOKE" & DVD From Y-7046 To 4-8270					
40	Y2-2315-60	ROOF ANTENNA & WIRING "R.E.I." From Y-7046 To 6-8906					
40	Y2-2315-99	SUBWOOFER - INSTALLATION From RETROFIT					
45	Y2-2317-00	FRONT MONITOR - VIDEO - "R.E.I." From Y-7046 To 6-8578					
45	Y2-2317-01	FRONT MONITOR FLAT SCREEN - VIDEO - "R.E.I." From 5-8579 To 6-8906					
50	Y2-2317-10	SIDE MONITOR - VIDEO - "R.E.I." From Y-7046 To 6-8906					
50	Y2-2317-11	SIDE MONITOR FLAT SCREEN - VIDEO -"R.E.I." From Y-7046 To 6-8906					
55	Y2-2317-12	BACK SEAT MONITOR SCREEN - VIDEO -"R.E.I." From 5-8678 To 6-8906					
55	Y2-2317-20	VIDEO VHS PLAYER - INSTALLATION "R.E.I." From Y-7046 To 6-8906					
55	Y2-2317-30	VIDEO & AUDIO SYSTEM - INSTALLATION From 4-8271 To 5-8592					
55	Y2-2317-31	VIDEO & AUDIO SYSTEM - INSTALLATION From 5-8593 To 6-8906					
55	Y2-2317-99	VIDEO & AUDIO SYSTEM - INSTALLATION From RETROFIT					
60	Y2-2318-00	CLOCK (DIGITAL) From Y-7046 To 6-8906					
70	Y2-2320-00	JACK & FLARE KIT - INSTALLATION From Y-7046 To 8-9339					
75	Y2-2320-30	EXTINGUISHER - INSTALLATION From Y-7046 To 8-9339					
85	Y2-2320-40	FIRST AID KIT & AXE - INSTALLATION From Y-7046 To 6-8906					
90	Y2-2325-00	LAVATORY - ACCESSORIES From Y-7046 To 6-8906					
95	Y2-2326-00	TOILET PUMP ASSY From Y-7046 To 6-8906					
100	Y2-2327-00	SUMP TANK - PLASTIC From Y-7046 To 6-8906					
110	Y2-2328-00	LAVATORY WALL - INSTALLATION From Y-7046 To 6-8906					
115	Y2-2329-00	LAVATORY DOOR LOCK & SWITCH From Y-7046 To 6-8906					
120	Y2-2330-00	WATER & SUMP TANK - INSTALLATION From Y-7046 To 6-8906					
125	Y2-2337-00	LAVATORY FAN - INSTALLATION From Y-7046 To 6-8906					
135	Y2-2345-40	POWERVERTER - 24/110 VOLTS - 1000 WATTS From Y-7046 To 6-8906					
135	Y2-2345-41	POWERVERTER - 24/110 VOLTS - 5000 WATTS From Y-7046 To 6-8906					
135	Y2-2345-42	POWERVERTER - 24/110 VOLTS - 1800 WATTS From Y-7046 To 6-8906					
135	Y2-2345-43	110 VOLT - OUTLET From Y-7046 To 6-8906					
135	Y2-2345-99	110 VOLT - OUTLET / "RETROFIT" From Y-7046 To 6-8906					
140	Y2-2350-10	WATER HEATER - INSTALLATION From Y-7046 To 2-7764					
140	Y2-2350-11	WATER HEATER - INSTALLATION From 2-7765 To 6-8906					
145	Y2-2355-00	BACK-UP CAMERA & MONITOR - INSTALLATION From Y-7046 To 6-8906					
145	Y2-2355-10	FRONT CAMERA - INSTALLATION From Y-7046 To 6-8906					

		Date:07/2024	Y2-23

ACCESSORIES

Item#	Part	Description	XLII 45	XLII MTH40	XLII MTH45	XLII MTH45E	NOTES
155	Y2-2370-10	W.C.L. - DECAL From Y-7046 To 6-8906					
155	Y2-2370-20	W.C.L. SEAT BELTS From Y-7046 To 6-8906					
160	Y2-2380-00	W.C.L. "RICON" - INSTALLATION MODEL "F9A" From Y-7046 To 1-7680					
160	Y2-2380-01	W.C.L. "RICON" - INSTALLATION MODEL "HC-L002" From 1-7681 To 4-8330					
160	Y2-2380-02	W.C.L. "RICON" REMOVABLE - INSTALLATION MODEL "F9T" & "F9TF" From 4-8331 To 6-8906					
160	Y2-2380-05	W.C.L. "RICON" MODEL "F9A" From Y-7046 To 1-7680					
160	Y2-2380-06	W.C.L. "RICON" MODEL "HC-L002" From 1-7681 To 4-8278					
160	Y2-2380-07	W.C.L. "RICON" REMOVABLE MODEL "F9T" From 4-8279 To 5-8605					
160	Y2-2380-08	W.C.L. "RICON" REMOVABLE MODEL "F9TF" From 5-8606 To 6-8906					
160	Y2-2380-10	W.C.L. "RICON" - LIFT ENCLOSURE ASSY MODEL "F9A" From Y-7046 To 1-7680					
160	Y2-2380-11	W.C.L. "RICON" - LIFT ENCLOSURE ASSY MODEL "HC-L002" From 1-7681 To 4-8278					
160	Y2-2380-12	W.C.L. "RICON" - LIFT ENCLOSURE ASSY MODEL "F9T" & "F9TF" From 4-8279 To 6-8906					
160	Y2-2380-20	W.C.L. "RICON" - PLATFORM ASSY MODEL "F9A" From Y-7046 To 1-7680					
160	Y2-2380-21	W.C.L. "RICON" - PLATFORM ASSY MODEL "HC-L002" From 1-7681 To 4-8278					
160	Y2-2380-22	W.C.L. "RICON" - PLATFORM ASSY MODEL "F9T" From 4-8279 To 5-8605					
160	Y2-2380-23	W.C.L. "RICON" - PLATFORM ASSY MODEL "F9TF" From 5-8606 To 6-8906					
160	Y2-2380-30	W.C.L. "RICON" - TRAVELING FRAME ASSY MODEL "F9A" From Y-7046 To 1-7680					
160	Y2-2380-31	W.C.L. "RICON" - TRAVELING FRAME ASSY MODEL "HC-L002" From 1-7681 To 4-8278					
160	Y2-2380-32	W.C.L. "RICON" - TRAVELING FRAME ASSY MODEL "F9T" & "F9TF" From 1-8279 To 6-8906					
160	Y2-2380-40	W.C.L. "RICON" - CARRIAGE ASSY MODEL "F9A" From Y-7046 To 1-7680					
160	Y2-2380-41	W.C.L. "RICON" - CARRIAGE ASSY MODEL "HC-L002" From 1-7681 To 4-8278					
160	Y2-2380-42	W.C.L. "RICON" - CARRIAGE ASSY MODEL "F9T" & "F9TF" From 4-8279 To 6-8906					
160	Y2-2380-50	W.C.L. "RICON" - BRIDGE PLATE ASSY 9" MODEL "F9A" From Y-7046 To 1-7680					
160	Y2-2380-51	W.C.L. "RICON" - BRIDGE PLATE ASSY 9" MODEL "HC-L002" From 1-7681 To 4-8278					
160	Y2-2380-52	W.C.L. "RICON" - BRIDGE PLATE ASSY 9" MODEL "F9T" & "F9TF" From 4-8279 To 6-8906					
160	Y2-2380-60	W.C.L. "RICON" - PUMP INSTALLATION MODEL "F9A" From Y-7046 To 1-7680					
160	Y2-2380-61	W.C.L. "RICON" - PUMP INSTALLATION MODEL "HC-L002" From 1-7681 To 4-8278					
160	Y2-2380-62	W.C.L. "RICON" - PUMP INSTALLATION MODEL "F9T" & "F9TF" From 4-8279 To 6-8906					
160	Y2-2380-65	W.C.L. "RICON" - PUMP ASSY From Y-7046 To 6-8906					
160	Y2-2380-70	W.C.L. "RICON" - RELEASE HANDLE MODEL "HC-L002" From 1-7681 To 4-8278					
165	Y2-2390-00	"SLIDE-OUT" INFLATED SEAL & LOCKING PIN From Y-7046 To 6-8805					
165	Y2-2390-01	"SLIDE-OUT" INFLATED SEAL From 6-8806 To 8-9339					
165	Y2-2390-05	"SLIDE-OUT" CONTROL INSTALLATION From Y-7046 To 6-8805					
165	Y2-2390-06	"SLIDE-OUT" CONTROL PANEL - INSTALLATION From Y-7046 To 2-7780					
165	Y2-2390-10	"SLIDE-OUT" AIR CONTROL PANEL From Y-7046 To 2-7780					
165	Y2-2390-11	"SLIDE-OUT" AIR CONTROL PANEL From 2-7781 To 6-8805					
165	Y2-2390-12	"SLIDE-OUT" AIR CONTROL PANEL - MUX From 6-8806 To 8-9339					
165	Y2-2390-20	"SLIDE-OUT" - FRONT MECHANISM - INSTALLATION From Y-7046 To 6-8805					
165	Y2-2390-21	"SLIDE-OUT" - FRONT MECHANISM - INSTALLATION From 6-8806 To 8-9339					
165	Y2-2390-30	"SLIDE-OUT" - REAR MECHANISM INSTALLATION From Y-7046 To 6-8805					
165	Y2-2390-31	"SLIDE-OUT" - REAR MECHANISM INSTALLATION From 6-8806 To 8-9339					
165	Y2-2390-40	"SLIDE-OUT" - BED SUPPORT From Y-7046 To 6-8805					

		Date:07/2024	Y2-23

ACCESSORIES

Item#	Part	Description	XLII 45	XLII MTH40	XLII MTH45	XLII MTH45E	NOTES
165	Y2-2390-41	"SLIDE-OUT" - BED SUPPORT From 6-8806 To 8-9339					
165	Y2-2390-50	"SLIDE-OUT" - INSTALLATION From Y-7046 To 6-8805					
165	Y2-2390-51	"SLIDE-OUT" - INSTALLATION From 6-8806 To 8-9339					
165	Y2-2390-70	"SLIDE-OUT" - CYLINDER LOCK PIN ASSY From Y-7046 To 6-8805					

From Y-7046 To 7-9095		Date:07/2024	PAGE:Y2-2300-00
ACCESSORIES AIR SYSTEM			

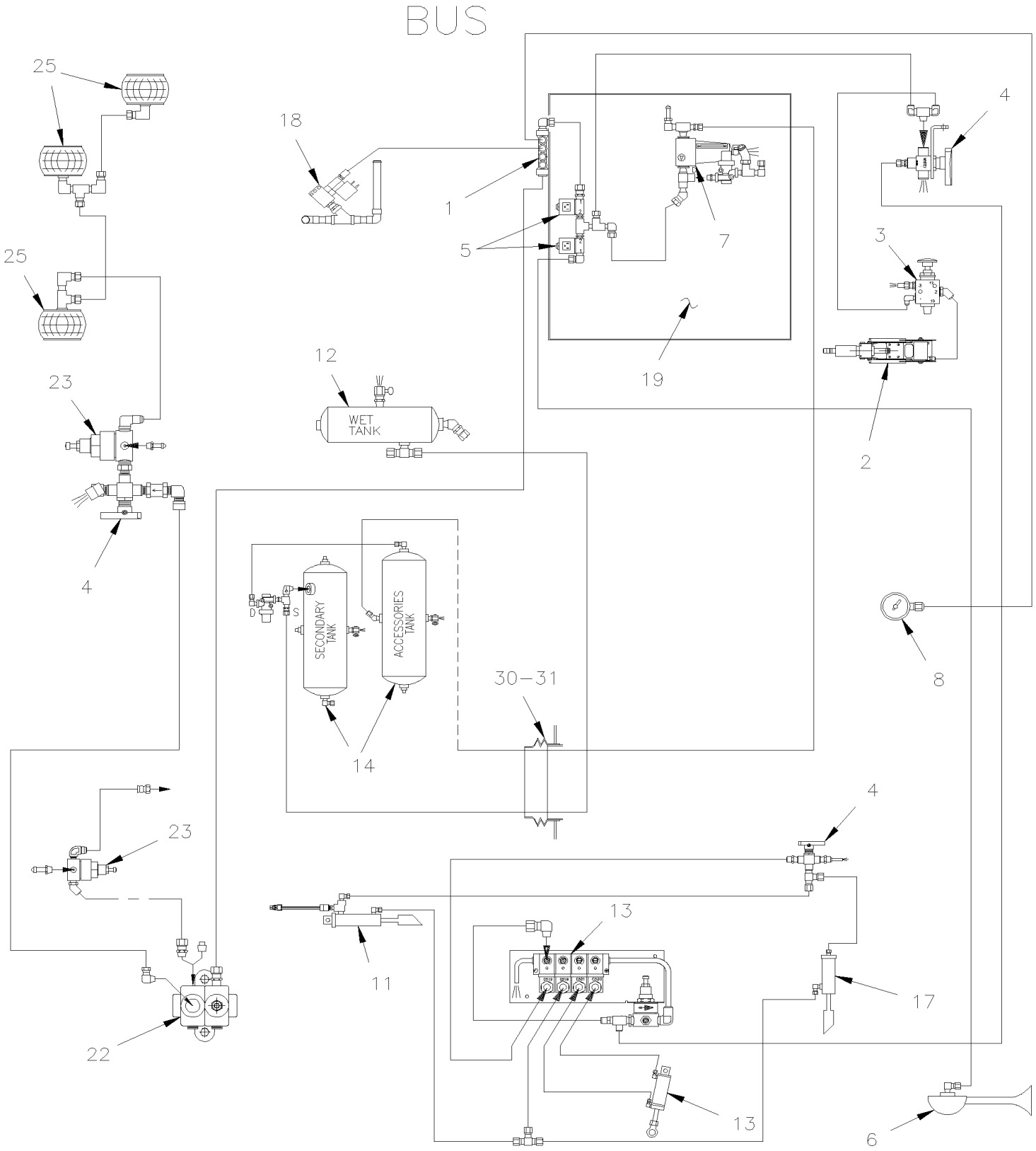

From Y-7046 To 7-9095		Date:07/2024	PAGE:Y2-2300-00
ACCESSORIES AIR SYSTEM			

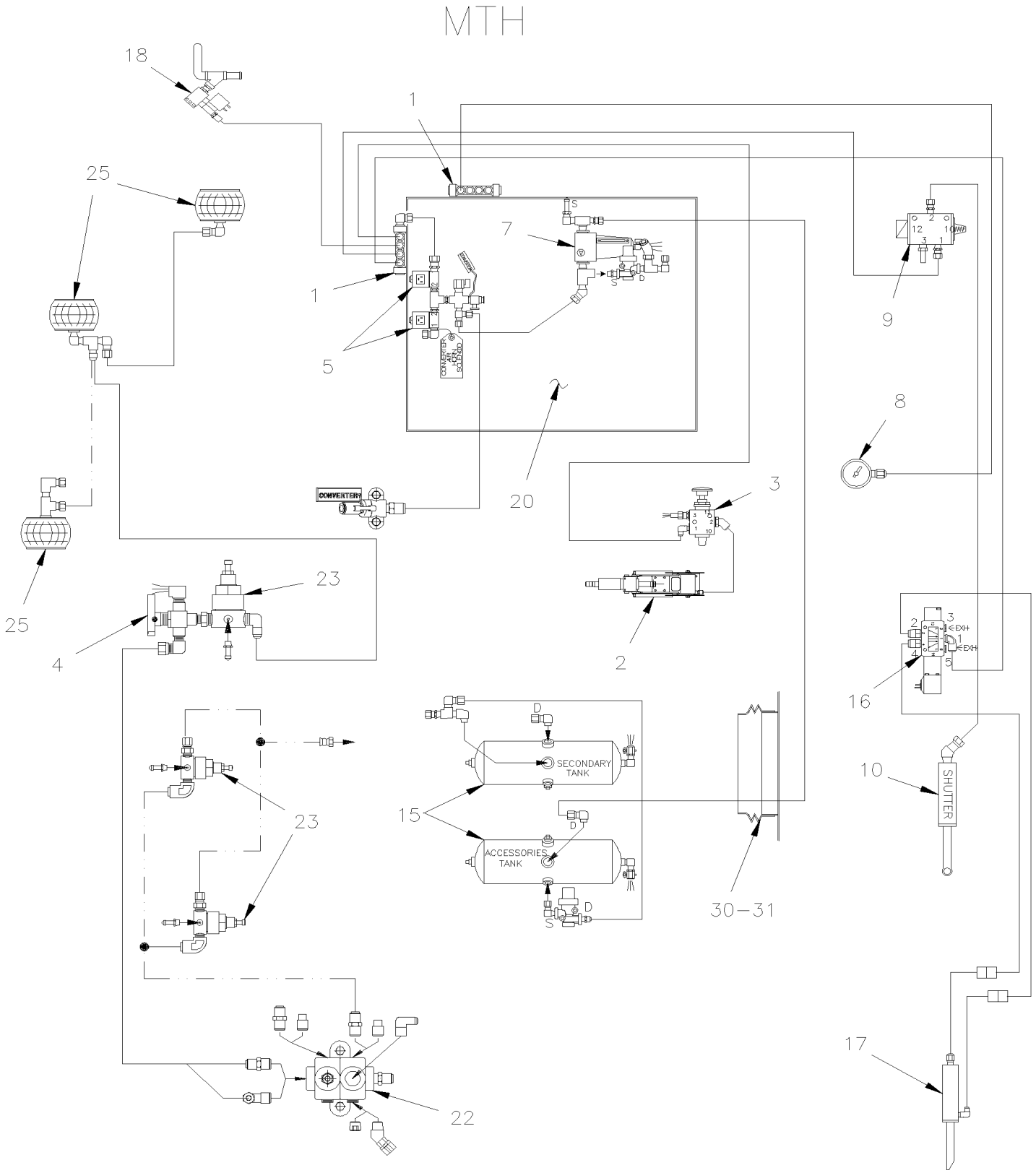

From Y-7046 To 7-9095		Date:07/2024	PAGE:Y2-2300-00

ACCESSORIES AIR SYSTEM

Item#	Part	Description	XLII 45	XLII MTH40	XLII MTH45	XLII MTH45E	NOTES
1	641415	MANIFOLD / PUSH-IN FITTING / 2x#6 / 4x#4 PLAS	1	1	1	1	
2	**Y2-1405-00**	**STEERING WHEEL & COLUMN ASSY**					
3	641445	VALVE, 3 WAYS, 2 POSITIONS MECHANICAL	1	1	1	1	
. NS	641992	. KNOB	1	1	1	1	
4	641417	VALVE, 3 WAYS 1/8NPT-Fx1/8NPT-Fx1/8NPT-F BR To 6-8906	1				
. NS	642014	. HANDLE / RED To 6-8906	1				
4	642161	VALVE, 3 WAYS 1/8NPT-Fx1/8NPT-Fx1/8NPT-F BR / SERVICE To 6-8906	1				
. NS	642014	. HANDLE / RED To 6-8906	1				
5	562804	VALVE, 2 WAYS N.C.	2	2	2	2	
. NS	562848	. CONNECTOR / SOCKET HOUSING ASSY 3C / PNEUMAC 54933-05	1	1	1	1	
6	640093	HORN AIR To 6-8906	1				
7	**Y2-1220-15**	**AIR FILTER - ACCESSORIES**					
8	**Y2-0645-20**	**CENTER DASHBOARD PANEL**					
9	N.P.N.	SUPPLIED BY CONVERTER		1	1	1	4
10	051570	SHUTTER ASSY		1	1	1	
. NS	550568	. CYLINDER AIR / SHUTTER / W/4" MOUNT		1	1	1	
. NS	550569	. BOOT RUBBER		1	1	1	
. NS	550577	. SPRING EXTENSION / .350 O.D. x 6.875 x .069		1	1	1	
. NS	550179	. BUSHING 5/16" I.D. / NYLON		AR	AR	AR	
11	**Y2-1804-00**	**ENTRANCE DOOR LOCK**					
12	140869	AIR TANK / 1791 IN° / 9 1/2" O.D. X 27"	1	1	1	1	
13	**Y2-1802-00**	**ENTRANCE DOOR CONTROL**					
14	641583	AIR TANK / 1508 IN° / 9" 1/2 O.D. X 24" To 6-8906	2				
15	141834	AIR TANK / 1303 IN° / 8" O.D. X 27"1/2		2	2	2	
16	**Y2-1804-50**	**ENTRANCE DOOR - VALVE - MTH**					
17	287012	UPPER LOCK ASSY To 6-8906	1				
18	**Y2-2207-01**	**WATER VALVE - W/2 WAYS**					
19	**Y2-1630-00**	**FRONT KNEELING - CONTROL PANEL To 2-7799**					
19	**Y2-1630-01**	**FRONT KNEELING - CONTROL PANEL From 2-7800 To 5-8558**					
19	**Y2-1630-02**	**FRONT KNEELING - CONTROL PANEL From 5-8559**					
20	**Y2-1640-50**	**LEVEL-LOW - CONTROL PANEL & VALVES To 2-7799**					
20	**Y2-1640-51**	**LEVEL-LOW - CONTROL PANEL & VALVES From 2-7800 To 5-8558**					
20	**Y2-1640-52**	**LEVEL-LOW - CONTROL PANEL & VALVES From 5-8559**					
22	640055	MANIFOLD / PIPE FITTING / 7 PORTS 1/4NPT-F STL	1	1	1	1	
23	641472	AIR PRESSURE REGULATOR 1/4" NPT / COPPER	1	1	1	1	
25	550840	BELLOW ASSY / BELT TENSIONER / 4" O.D.	AR	AR	AR	AR	
25	950208	BELLOW ASSY / BELT TENSIONER / 3" O.D.	AR	AR	AR	AR	
. NS	504695	. HOSE CLAMP STEPLESS SPRING SS / OETIKER / 2.9-3.3	1	1	1	1	
30	504499	CUFF END BELLOW / 2 7/8" I.D. x 3 5/8" x 4 7/16	1	1	1	1	
31	141567	PROTECTOR RUBBER 100MM	1	1	1	1	

From Y-7046 To 7-9095		Date:07/2024	PAGE:Y2-2300-00

ACCESSORIES AIR SYSTEM

Item#	Part	Description	XLII 45	XLII MTH40	XLII MTH45	XLII MTH45E	NOTES
		4) NO PARTS NUMBER					

From 7-9096 To 8-9339		Date:07/2024	PAGE:Y2-2300-50
ACCESSORIES AIR SYSTEM - MTH			

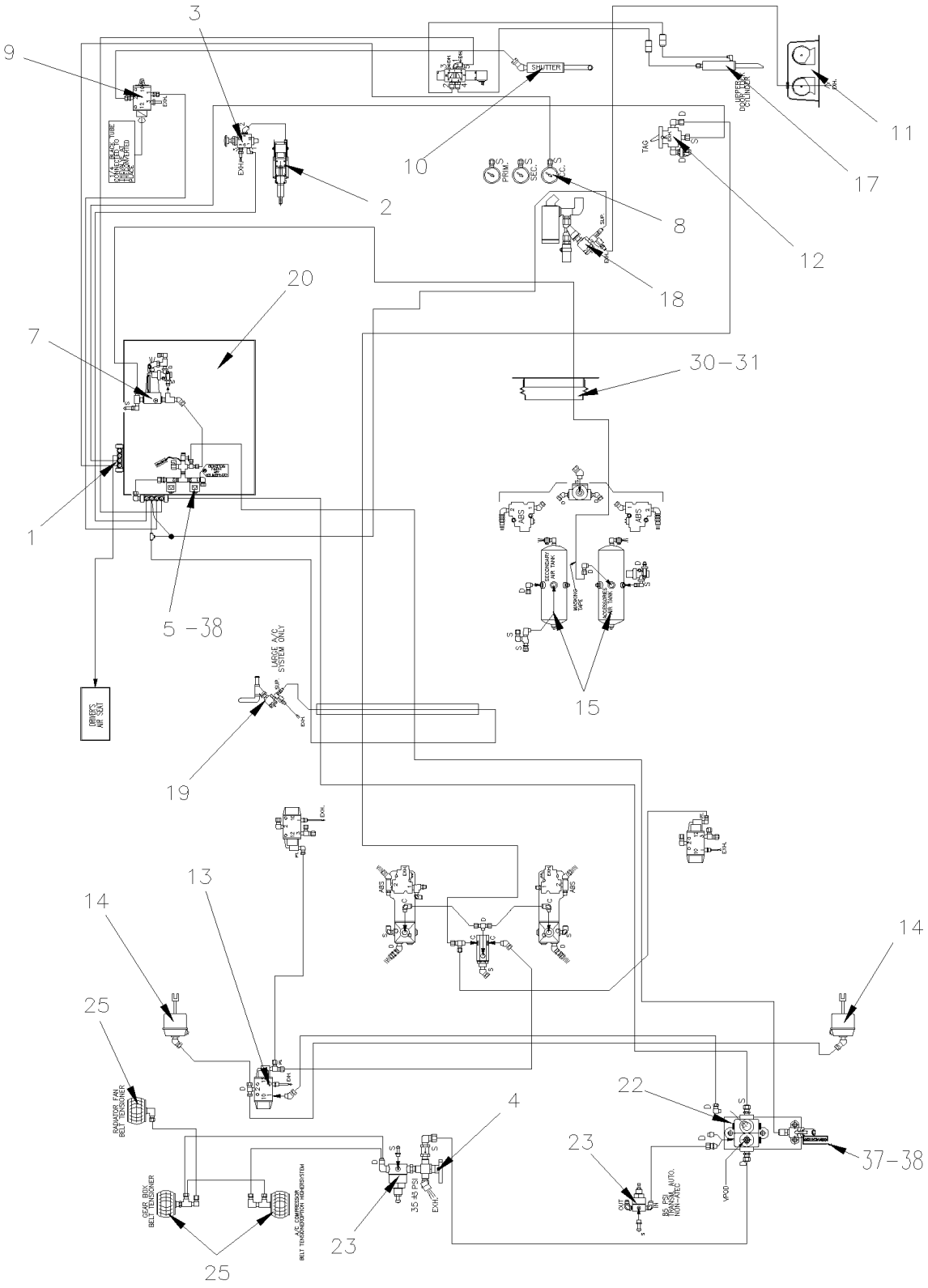

From 7-9096 To 8-9339		Date:07/2024	PAGE:Y2-2300-50

ACCESSORIES AIR SYSTEM - MTH

Item#	Part	Description	XLII 45	XLII MTH40	XLII MTH45	XLII MTH45E	NOTES
1	641415	MANIFOLD / PUSH-IN FITTING / 2x#6 / 4x#4 PLAS		1	1	1	
2	**Y2-1405-00**	**STEERING WHEEL & COLUMN ASSY**					
3	641445	VALVE, 3 WAYS, 2 POSITIONS MECHANICAL		1	1	1	
. NS	641992	. KNOB		1	1	1	
4	641417	VALVE, 3 WAYS 1/8NPT-Fx1/8NPT-Fx1/8NPT-F BR		1	1	1	
. NS	642014	. HANDLE / RED		1	1	1	
4	642161	VALVE, 3 WAYS 1/8NPT-Fx1/8NPT-Fx1/8NPT-F BR / SERVICE		1	1	1	
. NS	642014	. HANDLE / RED		1	1	1	
5	562804	VALVE, 2 WAYS N.C.		2	2	2	
. NS	562848	. CONNECTOR / SOCKET HOUSING ASSY 3C / PNEUMAC 54933-05		1	1	1	
7	**Y2-1220-15**	**AIR FILTER - ACCESSORIES**					
8	**Y2-0645-20**	**CENTER DASHBOARD PANEL**					
9	N.P.N.	SUPPLIED BY CONVERTER					4
10	051570	SHUTTER ASSY		1	1	1	
. NS	550568	. CYLINDER AIR / SHUTTER / W/4" MOUNT		1	1	1	
. NS	550569	. BOOT RUBBER		1	1	1	
. NS	550577	. SPRING EXTENSION / .350 O.D. x 6.875 x .069		1	1	1	
. NS	550179	. BUSHING 5/16" I.D. / NYLON		AR	AR	AR	
11	**Y2-2310-00**	**HORN - INSTALLATION**					
12	640136	VALVE, CONTROL TW-1		1	1	1	
. NS	641156	. REPAIR KIT / TW-1		1	1	1	
13	641274	VALVE, 3 WAYS, 2 POSITIONS N.C.		1	1	1	
14	**Y2-1615-10**	**TAG AXLE - LIFTING**					
15	141834	AIR TANK / 1303 IN° / 8" O.D. X 27"1/2		2	2	2	
17	287012	UPPER LOCK ASSY		1	1	1	
18	**Y2-2207-01**	**WATER VALVE - W/2 WAYS**					
19	**Y2-2207-02**	**WATER VALVE - W/3 WAYS BY-PASS**					
20	**Y2-1640-52**	**LEVEL-LOW - CONTROL PANEL & VALVES**					
22	640055	MANIFOLD / PIPE FITTING / 7 PORTS 1/4NPT-F STL		1	1	1	
23	641472	AIR PRESSURE REGULATOR 1/4" NPT / COPPER		2	2	2	
25	550840	BELLOW ASSY / BELT TENSIONER / 4" O.D.		3	3	3	
30	504499	CUFF END BELLOW / 2 7/8" I.D. x 3 5/8" x 4 7/16		1	1	1	
31	141567	PROTECTOR RUBBER 100MM		1	1	1	
37	640488	VALVE, AIR FILL 1/8" NPT		1	1	1	
. NS	650164	. CAP VALVE / CHROME		1	1	1	
38	5011129	NEEDLE VALVE 1/4 NPT M x 1/4 NPT F		1	1	1	
		4) NO PARTS NUMBER					

From Y-7046 To 6-8805		Date:07/2024	PAGE:Y2-2300-90
"SLIDE-OUT" AIR SYSTEM			

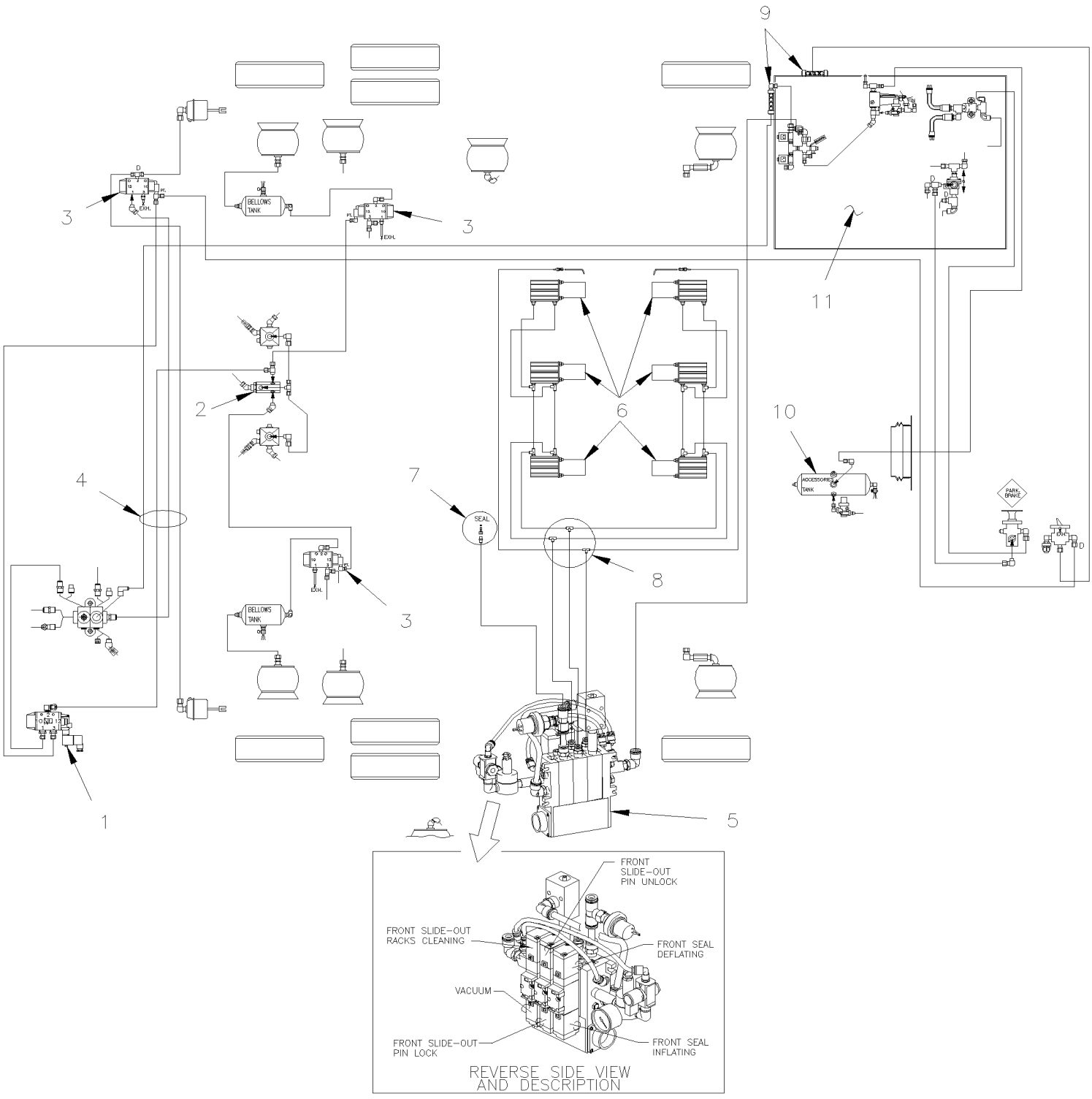

From Y-7046 To 6-8805		Date:07/2024	PAGE:Y2-2300-90
"SLIDE-OUT" AIR SYSTEM			

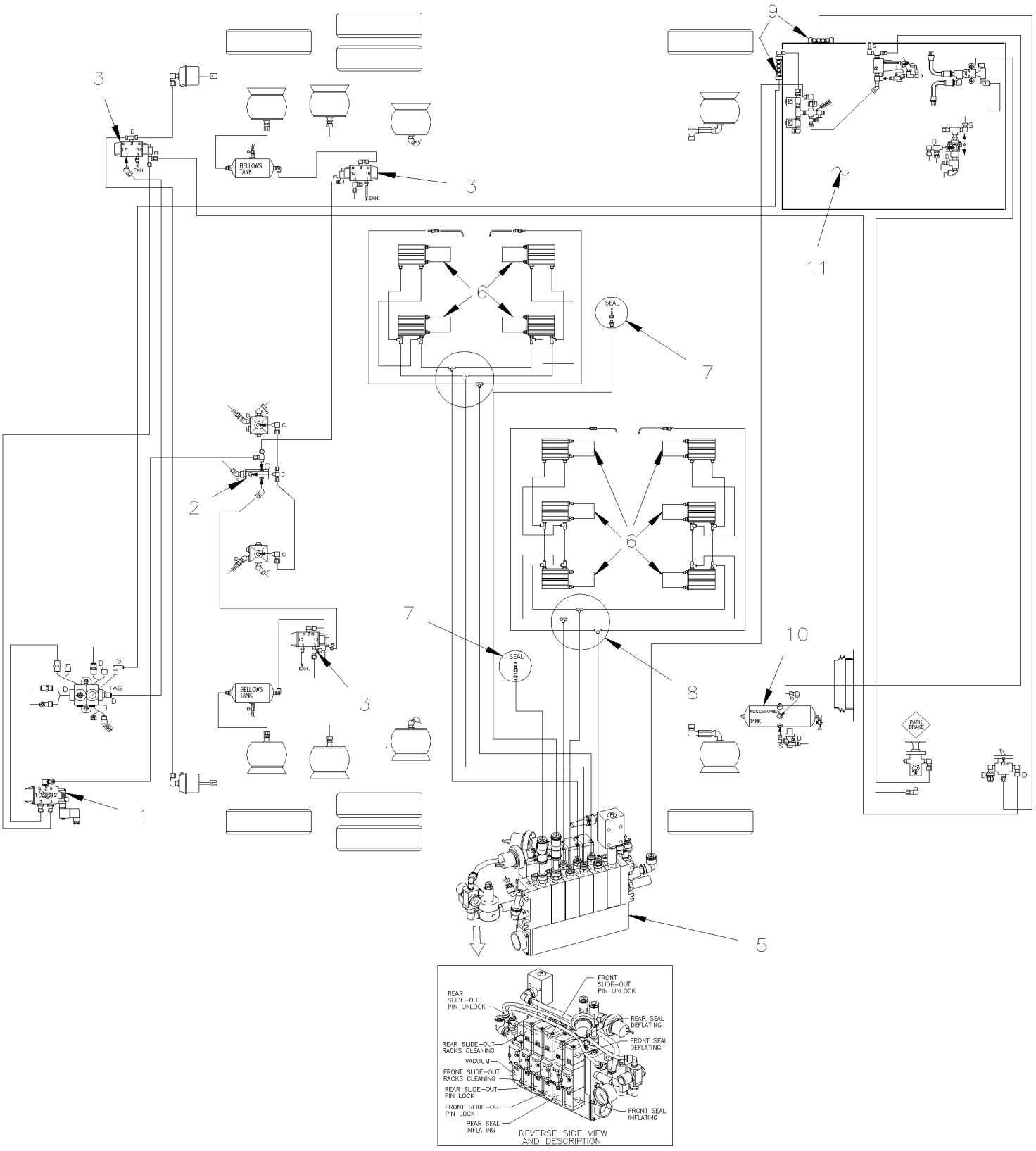

From Y-7046 To 6-8805		Date:07/2024	PAGE:Y2-2300-90

"SLIDE-OUT" AIR SYSTEM

Item#	Part	Description	XLII 45	XLII MTH40	XLII MTH45	XLII MTH45E	NOTES
1	641937	VALVE, 3 WAYS, 2 POSITIONS N.C. / W/MAN OVERRIDE			1	1	
. NS	641929	. COIL 24V			1	1	
. NS	641385	. CONNECTOR / SOCKET HOUSING ASSY 3C / PNEUMAC 54934-01			1	1	
2	640442	VALVE, INVERSION TR-2			1	1	
3	641274	VALVE, 3 WAYS, 2 POSITIONS N.C.			3	3	
4	**Y2-1202-00**	**TUBES PLASTIC / AIR D.O.T.**					
5	**Y2-2390-10**	**"SLIDE-OUT" AIR CONTROL PANEL To 2-7780**					
5	**Y2-2390-11**	**"SLIDE-OUT" AIR CONTROL PANEL From 2-7781**					
6	**Y2-2390-70**	**"SLIDE-OUT" - CYLINDER LOCK PIN ASSY**					
7	**Y2-2390-00**	**"SLIDE-OUT" INFLATED SEAL & LOCKING PIN**					
8	641955	UNION TEE / PUSH-IN FITTING / #4x#4x#4 BR			AR	AR	
9	641897	MANIFOLD / PUSH-IN FITTING / 2x#6 / 4x#4 PLAS			2	2	
10	141834	AIR TANK / 1303 IN° / 8" O.D. X 27"1/2			1	1	
11	**Y2-1640-50**	**LEVEL-LOW - CONTROL PANEL & VALVES To 2-7799**					
11	**Y2-1640-51**	**LEVEL-LOW - CONTROL PANEL & VALVES From 2-7800 To 5-8558**					
11	**Y2-1640-52**	**LEVEL-LOW - CONTROL PANEL & VALVES From 5-8559**					

From Y-7046 To 8-9339		Date:07/2024	PAGE:Y2-2305-00
LOWER WINDSHIELD WIPER			

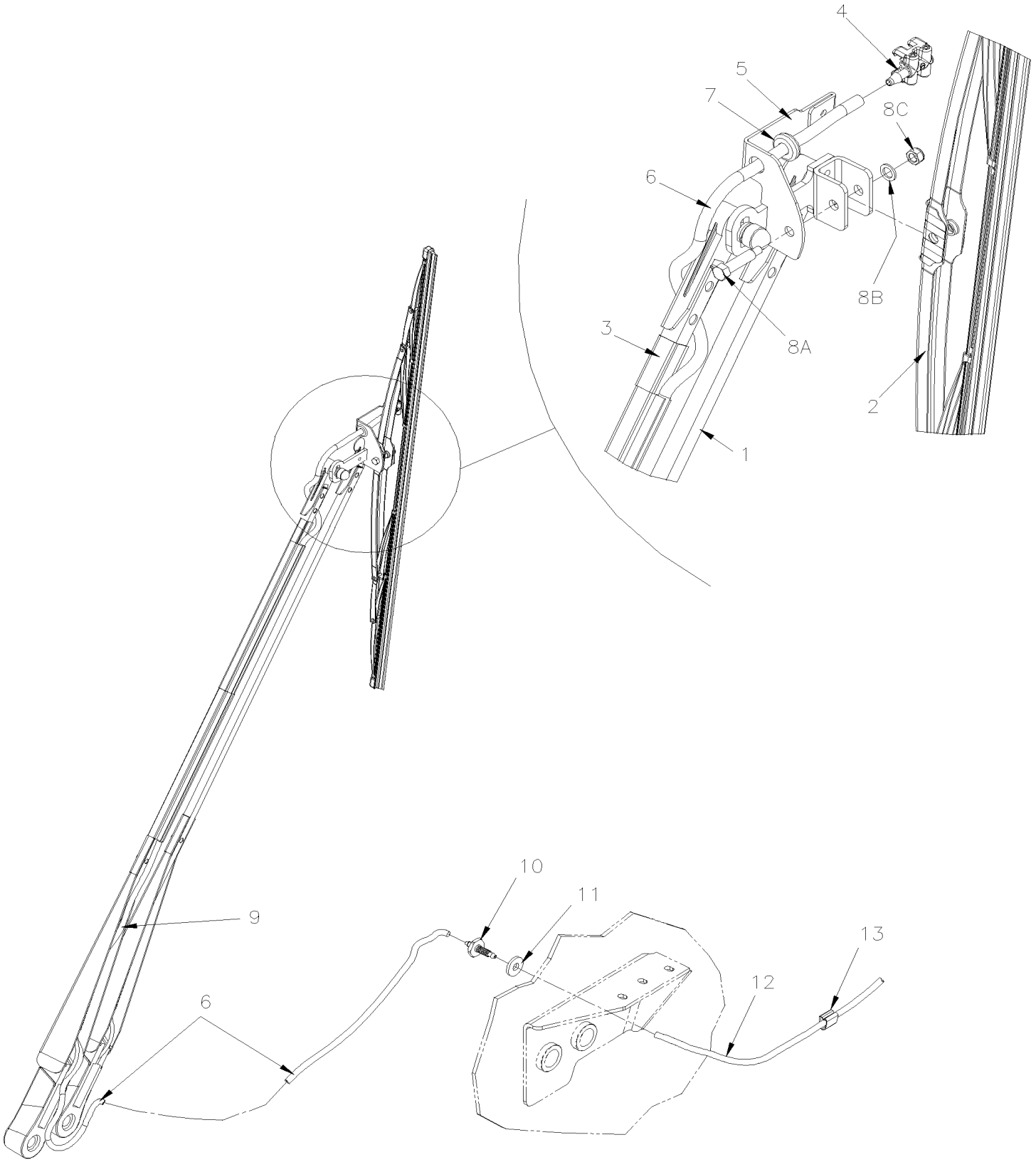

From Y-7046 To 8-9339		Date:07/2024	PAGE:Y2-2305-00

LOWER WINDSHIELD WIPER

Item#	Part	Description	XLII 45	XLII MTH40	XLII MTH45	XLII MTH45E	NOTES
1	800331	ARM WIPER ASSY "BOSCH" To 5-8609	1	1	1	1	
1	800359	ARM WIPER ASSY From 5-8610	1	1	1	1	
. NS	800362	. CAP CLOSING LOWER MAIN ARM From 5-8610	1	1	1	1	
. NS	800363	. CAP CLOSING LOWER IDLER ARM From 5-8610	1	1	1	1	
2	800329	WIPER BLADE 700MM / "BOSCH" To 5-8609	1	1	1	1	
. NS	191660	. RUBBER BLADE REFILL 700MM w/"BOSCH" BLADE ONLY To 5-8609	1	1	1	1	
2	800360	WIPER BLADE 700MM From 5-8610	1	1	1	1	
2	800378	WIPER BLADE 700MM	1	1	1	1	
3	800332	HOSE CLIP To Y-7380	1	1	1	1	
3	300432	HOSE CLIP From Y-7381 To 5-8609	1	1	1	1	
4	800330	NOZZLE, WINDSHIELD WASHER / "BOSCH" To 5-8609	1	1	1	1	
4	800361	NOZZLE, WINDSHIELD WASHER "DOGA" From 5-8610	1	1	1	1	
5	300383	NOZZLE SUPPORT / PASSENGER'S SIDE To 2-7775	1	1	1	1	
5	300382	NOZZLE SUPPORT / DRIVER'S SIDE To 2-7775	1	1	1	1	
5	300461	NOZZLE SUPPORT / DRIVER`S SIDE From 2-7776 To 5-8609	1	1	1	1	
5	300552	NOZZLE SUPPORT / DRIVER`S SIDE From 5-8610	1	1	1	1	
6	Call order desk	HOSE 1400MM 1/8" I.D	1	1	1	1	P
6	503696	. HOSE 1/8" I.D	AR	AR	AR	AR	
7	504529	GROMMET / .250x.375x.062x.281x.625	1	1	1	1	
8A	800345	SCREW SHR CAP HEX M6X25 [M4-0.7	1	1	1	1	
8A	680038	THREAD LOCKER LOCTITE #243 / BLUE / 50ml	AR	AR	AR	AR	
8C	502557	NUT HEX NYRT M4-0.7 SS	1	1	1	1	
9	948702	TIE CABLE BK 85 X 2.5	1	1	1	1	
10	300384	ADAPTOR HOSE #3 / WET ARM To 2-7775	1	1	1	1	
10	300469	ADAPTOR HOSE #3 / WET ARM M8-1.25 x 44MM From 2-7776	1	1	1	1	
11	502220	WASHER FL .375x1.000x.125 RUB	1	1	1	1	
12	503002	HOSE / EPDM 5/32" I.D. / S.L.	AR	AR	AR	AR	
NS	561681	CONVOLUTED TUBING / SLIT / BLACK & GRAY / .350"	AR	AR	AR	AR	
13	504536	CABLE CLIP ½" / ADHESIVE	AR	AR	AR	AR	
NS	504273	CABLE TIE / 1/8" X 3"1/2	AR	AR	AR	AR	
NS	504637	CABLE TIE / 3/16" x 13"	AR	AR	AR	AR	
		P) CALL ORDER DESK FOR SPECIFIC APPLICATION (V.I.N.)					

From Y-7046 To 8-9339		Date:07/2024	PAGE:Y2-2305-05

LOWER WINDSHIELD WIPER - INSTALLATION

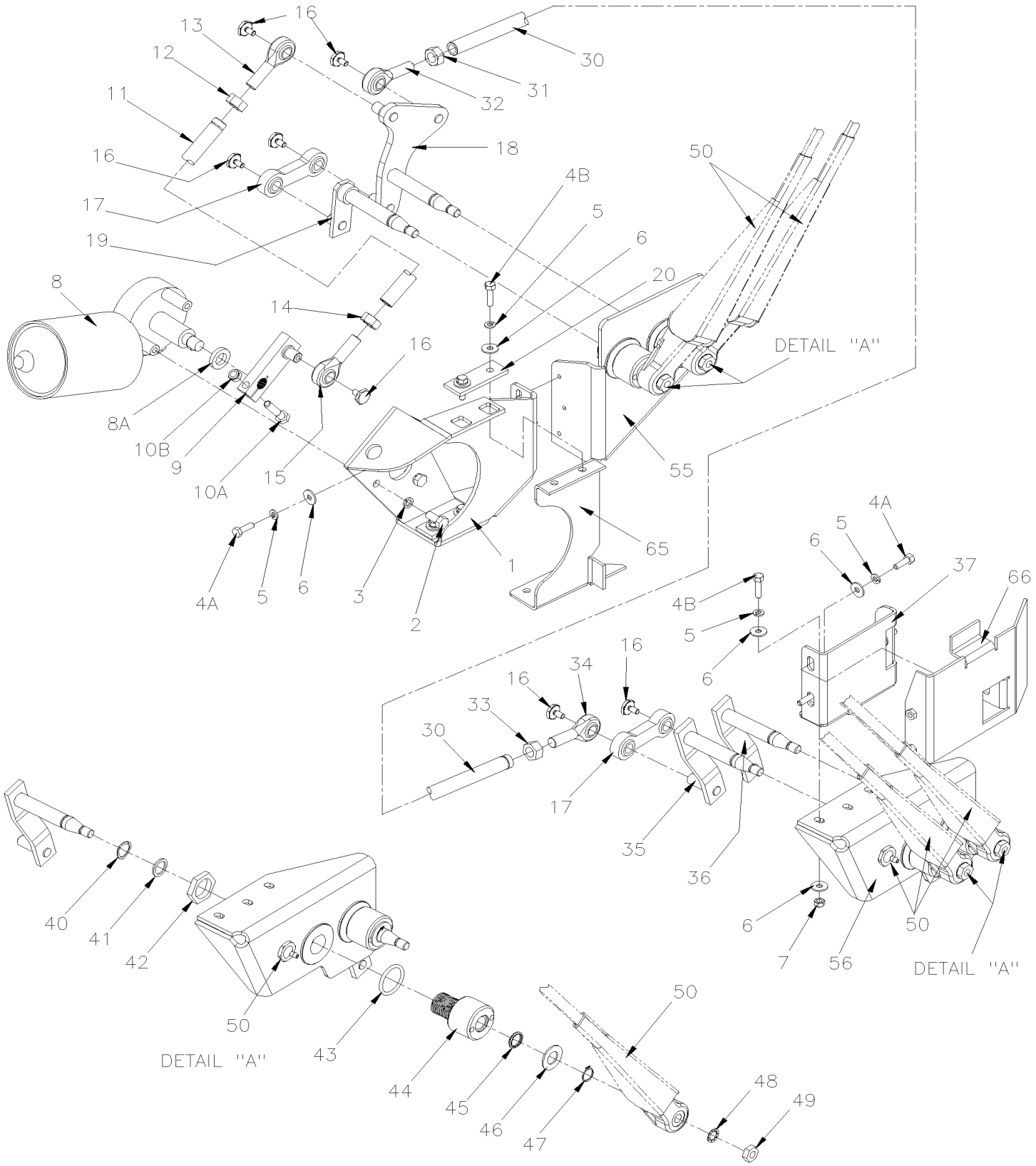

From Y-7046 To 8-9339		Date:07/2024	PAGE:Y2-2305-05

LOWER WINDSHIELD WIPER - INSTALLATION

Item#	Part	Description	XLII 45	XLII MTH40	XLII MTH45	XLII MTH45E	NOTES
1	300415	SUPPORT ELECTRIC MOTOR	1	1	1	1	
1	300543	SHIM 20GA	1	1	1	1	
1	300544	SHIM 24GA	1	1	1	1	
2	5001217	SCREW CAP HEX M8-1.25x20 G10.9	3	3	3	3	
3	500942	WASHER LO SPT 8.1x14.8x2.0 N500	3	3	3	3	
4A	502830	SCREW CAP HEX M6-1.0x20 G8.8 N500	6	6	6	6	
4B	5001209	SCREW CAP HEX M6-1.0x25 G8.8 Z050	7	7	7	7	
5	502564	WASHER LO SPT 6.1x11.8x1.6 Z050	13	13	13	13	
6	5001462	WASHER FL 6.4x18.0x1.6 Z050	16	16	16	16	
7	502681	NUT HEX NYRT M6-1.0 N500 G8	3	3	3	3	
8	800328	MOTOR WIPER ASSY / 24V / BOSCH	1	1	1	1	
8A	300424	WASHER	1	1	1	1	
9	300406	CRANK ARM To 1-7605	1	1	1	1	
9	300445	CRANK ARM From 1-7606	1	1	1	1	
10A	502651	. SCREW CAP HEX M8-1.25x35 G8.8 Z050	1	1	1	1	
10B	500868	. NUT HEX NYRT M8-1.25 Z050	1	1	1	1	
11	300363	ROD ASSY 254MM C/C	1	1	1	1	
11	300344	. ROD 179MM	1	1	1	1	
12	5001466	. NUT HEX LH M12-1.75 N500	1	1	1	1	
13	502253	. ROD END MALE L.H. M12-1.75-L.HH / 12MM I.D.	1	1	1	1	
14	5001757	. NUT HEX M12-1.75 N500	1	1	1	1	
15	502252	. ROD END MALE M12-1.75 / 12MM I.D.	1	1	1	1	
16	504680	RING RETAINER / EXT 12 x 11.35 x 0.60 To 1-7605	7	7	7	7	
16	507613	SCREW CAP HEX M6-1.0x12 / W/17MM HEAD ZP From 1-7606	7	7	7	7	
17	300338	DOUBLE LINK 60MM To 1-7605	1	1	1	1	
17	502256	DOUBLE LINK 60MM From 1-7606	1	1	1	1	
18	300416	COUPLING PLATE ASSY To 1-7605	1	1	1	1	
18	300442	COUPLING PLATE ASSY From 1-7606 To 3-8088	1	1	1	1	
18	300496	COUPLING PLATE ASSY From 3-8089	1	1	1	1	
19	300412	DRIVE LEVER ASSY EXT To 1-7605	1	1	1	1	
19	300443	DRIVE LEVER ASSY EXT From 1-7606 To 3-8088	1	1	1	1	
19	300497	DRIVE LEVER ASSY EXT From 3-8089	1	1	1	1	
20	300426	PLATE 25MMx70MM	2	2	2	2	
30	300362	ROD ASSY 1168MM C/C	1	1	1	1	
30	300332	. ROD 1093MM	1	1	1	1	
31	5001757	. NUT HEX M12-1.75 N500	1	1	1	1	
32	502252	. ROD END MALE M12-1.75 / 12MM I.D.	1	1	1	1	
33	5001466	. NUT HEX LH M12-1.75 N500	1	1	1	1	
34	502253	. ROD END MALE L.H. M12-1.75-L.HH / 12MM I.D.	1	1	1	1	
35	300345	DRIVE LEVER ASSY INT. To 1-7605	1	1	1	1	
35	300436	DRIVE LEVER ASSY INT. From 1-7606 To 3-8088	1	1	1	1	
35	300498	DRIVE LEVER ASSY INT. From 3-8089	1	1	1	1	

From Y-7046 To 8-9339		Date:07/2024	PAGE:Y2-2305-05

LOWER WINDSHIELD WIPER - INSTALLATION

Item#	Part	Description	XLII 45	XLII MTH40	XLII MTH45	XLII MTH45E	NOTES
36	300378	DRIVE LEVER ASSY EXT. To 1-7605	1	1	1	1	
36	300435	DRIVE LEVER ASSY EXT. From 1-7606 To 3-8088	1	1	1	1	
36	300500	DRIVE LEVER ASSY EXT. From 3-8089	1	1	1	1	
37	300336	TRANSITION SUPPORT	1	1	1	1	
40	5001471	WASHER SPR WAVE .855x.650x.015	4	4	4	4	
41	5001459	WASHER SPR WAVE 16.0x22.0x1.5	4	4	4	4	
42	5001463	NUT HEX JAM 1-14 Z050	4	4	4	4	
43	507366	O-RING	4	4	4	4	
44	300333	CAP-HOUSING	4	4	4	4	
. NS	5001455	. BUSHING BRASS 16X20X20	2	2	2	2	
NS	680739	GREASE SYNTHETIC / RED 20KG	AR	AR	AR	AR	
45	507369	O-RING W/BACKING	4	4	4	4	
46	5001460	WASHER FL .640x1.188x0.073 SS	4	4	4	4	
47	504691	RING RETAINER / EXT .625 x .588 x .035" / SS	4	4	4	4	
48	500823	WASHER LO INT 10.5x18.0x0.9 BK	4	4	4	4	
49	502567	NUT HEX M10-1.5 SS	4	4	4	4	
NS	680038	THREAD LOCKER LOCTITE #243 / BLUE / 50ml	AR	AR	AR	AR	
50	**Y2-2305-00**	**LOWER WINDSHIELD WIPER**					
55	N.S.S.	SUPPORT R.H.	1	1	1	1	1 A
56	N.S.S.	SUPPORT L.H.	1	1	1	1	1 A
65	251087	SUPPORT WIPER R.H.	1	1	1	1	
66	251086	SUPPORT WIPER L.H.	1	1	1	1	
		A) THIS PART IS FIXED IN FRONT FIBERGLASS CAP					
		1) NOT SOLD SEPARATELY					

From Y-7046 To 8-9339		Date:07/2024	PAGE:Y2-2305-20
WINDSHIELD WASHER - INSTALLATION			

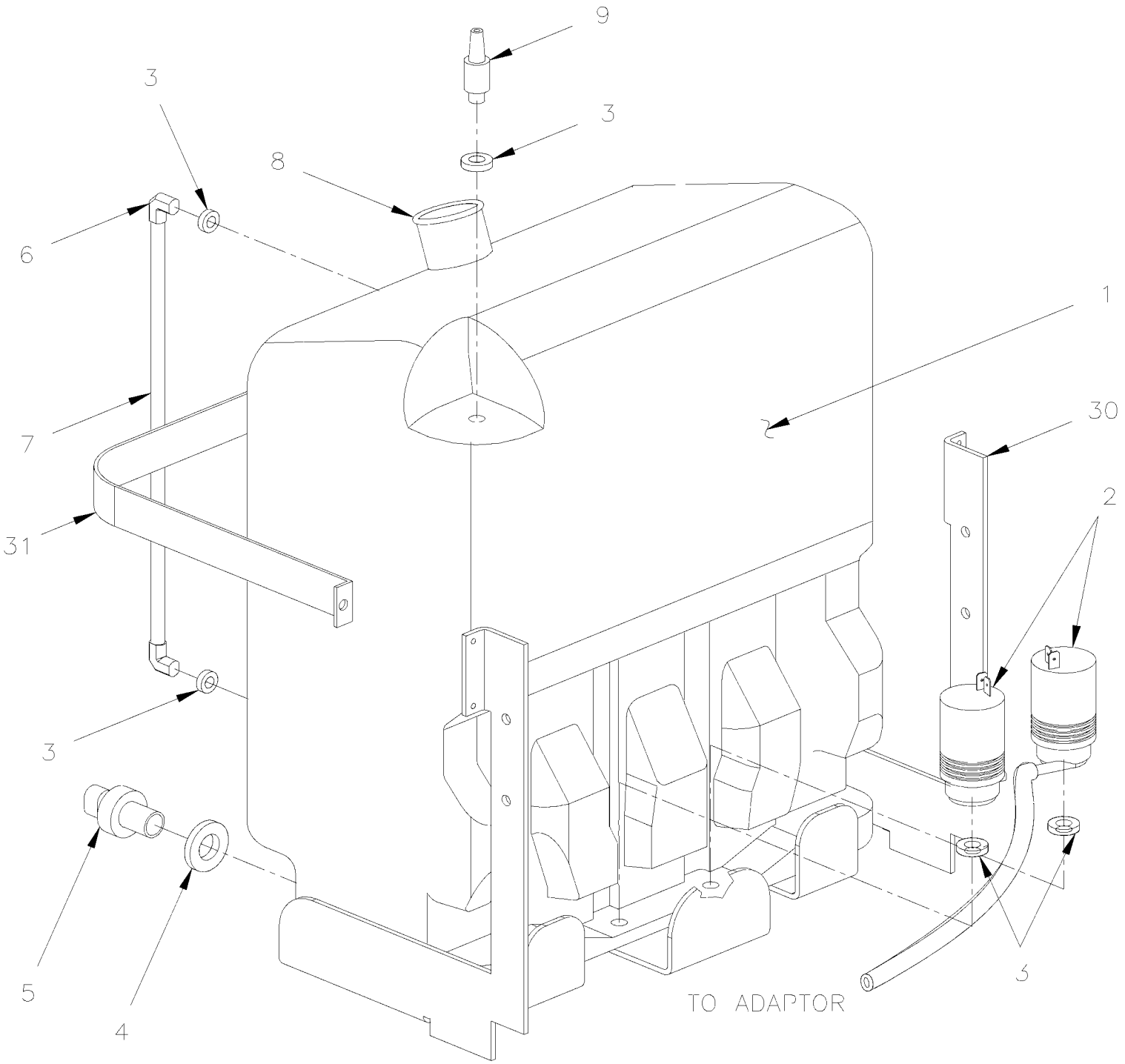

From Y-7046 To 8-9339		Date:07/2024	PAGE:Y2-2305-20

WINDSHIELD WASHER - INSTALLATION

Item#	Part	Description	XLII 45	XLII MTH40	XLII MTH45	XLII MTH45E	NOTES
1	800326	WINDSHIELD WASHER TANK	1	1	1	1	
2	800346	. PUMP WINDSHIELD WASHER 24V	2	2	2	2	
3	800348	. SEAL RETAINER	5	5	5	5	
4	800349	. SEAL RETAINER	1	1	1	1	
5	800347	. SENSOR LEVEL-LOW / "BOSCH"	1	1	1	1	S
. NS	562426	. . CONNECTOR / METRI-PACK 150.2 P2S / SH 2C / PED 12162193	1	1	1	1	S
. NS	562857	. . SOCKET TERMINAL / 18-16 / PED 12089340	2	2	2	2	S
5	800364	SENSOR LEVEL-LOW	1	1	1	1	S
. NS	563409	. CONNECTOR / SUPERSEAL 1.5 SERIES / SH 2C / AMP 282080-1	1	1	1	1	S
. NS	562607	. SOCKET TERMINAL / 20-16 / AMP 183025-1	2	2	2	2	S
5	067948	CABLE ASSY / ADAPTOR / NEW LEVEL (SERVICE ONLY)	1	1	1	1	S
6	800352	. ELBOW 90°	2	2	2	2	
7	560382	. PLASTIC TUBING / 1/4" / CLEAR	AR	AR	AR	AR	
8	800350	. COVER WASHER RESERVOIR	1	1	1	1	
9	800351	. CHECK VALVE	1	1	1	1	
20	503002	HOSE / EPDM 5/32" I.D. / S.L.	AR	AR	AR	AR	
30	288920	SUPPORT / WINDSHIELD WASHER TANK	1	1	1	1	A
31	288919	STRAP RETAINING SS / 330MM x 218MM	1	1	1	1	A
32	800364	SENSOR LEVEL-LOW	1	1	1	1	
. NS	563409	. CONNECTOR / SUPERSEAL 1.5 SERIES / SH 2C / AMP 282080-1	1	1	1	1	
. NS	562607	. SOCKET TERMINAL / 20-16 / AMP 183025-1	2	2	2	2	
33	066561	CABLE ASSY / ADAPTOR / FORMER LEVEL & NEW LEVEL (SERVICE ONLY)	1	1	1	1	
		A) OPTION					
		S) THIS SENSOR LEVEL IT SUPPERSEEDED BY # 800364 AND YOU NEED CABLE ADAPTOR # 067948 TO REPLACE					

From 7-9003 To 8-9339		Date:07/2024	PAGE:Y2-2305-25
HEAD LAMP CLEANING WASHER TANK			

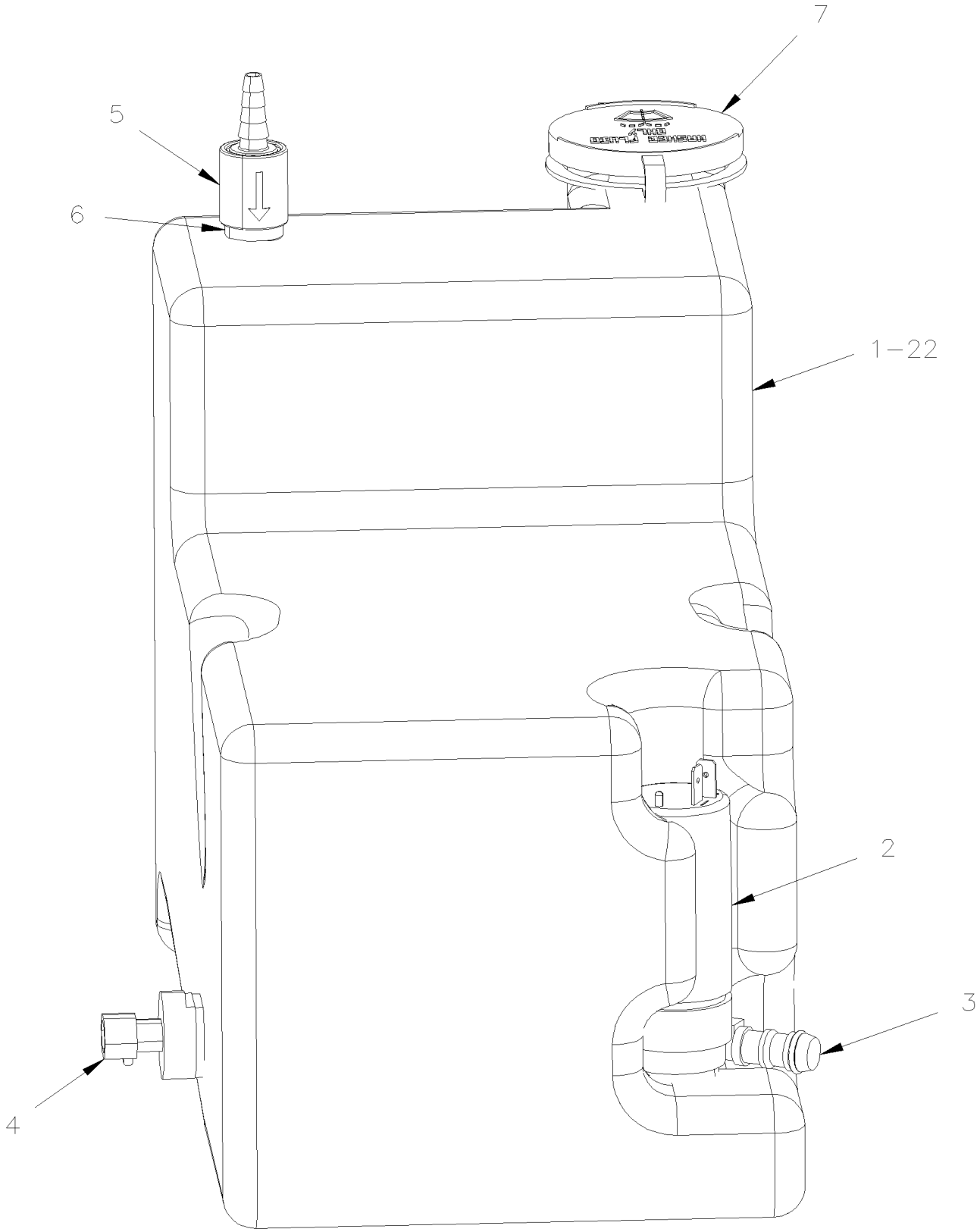

From 7-9003 To 8-9339		Date:07/2024	PAGE:Y2-2305-25
HEAD LAMP CLEANING WASHER TANK			

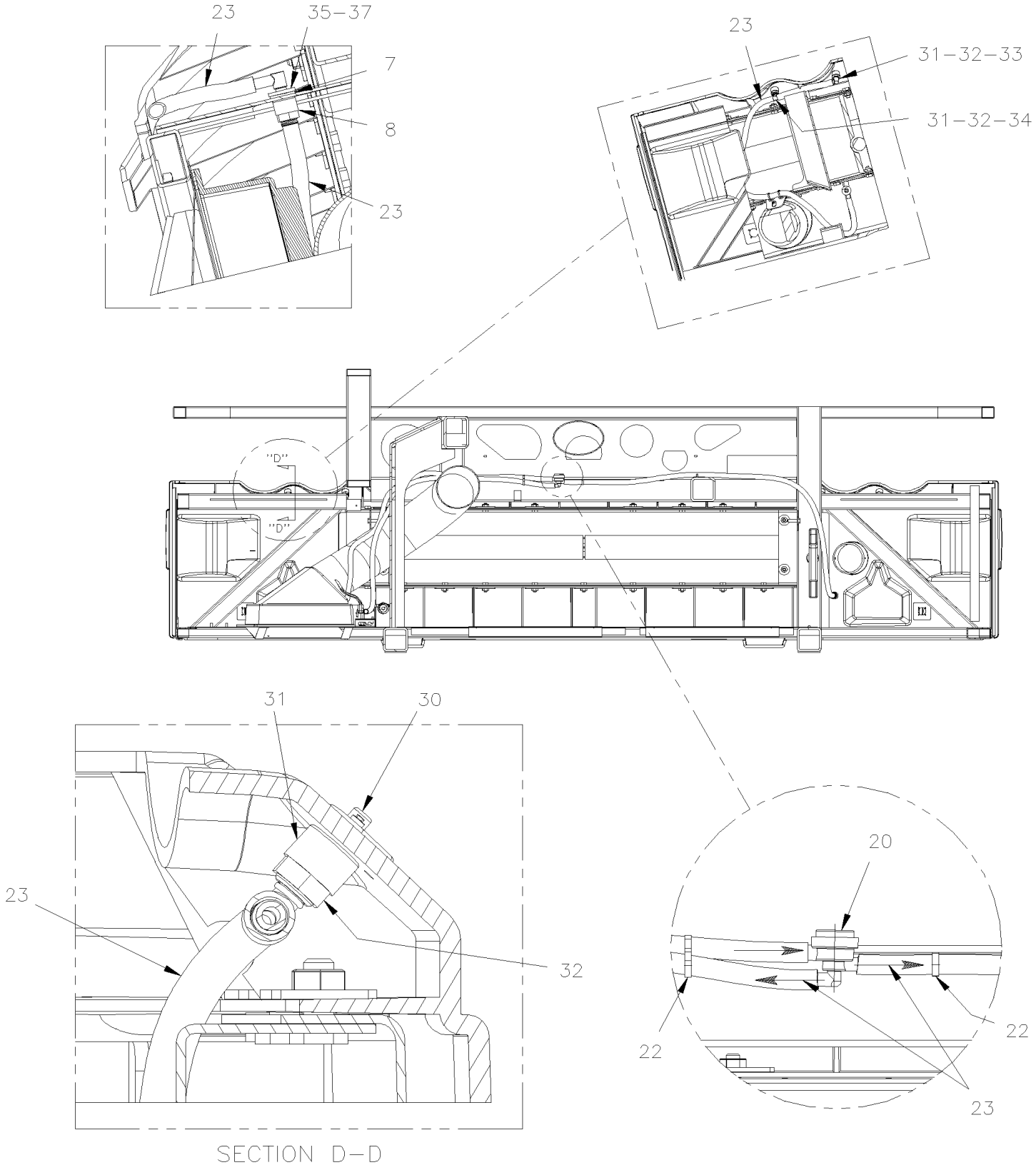

From 7-9003 To 8-9339		Date:07/2024	PAGE:Y2-2305-25

HEAD LAMP CLEANING WASHER TANK

Item#	Part	Description	XLII 45	XLII MTH40	XLII MTH45	XLII MTH45E	NOTES
	300573P	HEADLAMP WASHER TANK ASSY	1	1	1	1	
1	300577P	. HEADLAMP WASHER TANK	1	1	1	1	
2	800367	. PUMP SEALBEAM WASHER	1	1	1	1	
3	800368	. GROMMET PUMP	1	1	1	1	
4	800364	. SENSOR LEVEL-LOW	1	1	1	1	
. NS	563409	. . CONNECTOR / SUPERSEAL 1.5 SERIES / SH 2C / AMP 282080-1	1	1	1	1	
. NS	562607	. . SOCKET TERMINAL / 20-16 / AMP 183025-1	2	2	2	2	
5	800351	. CHECK VALVE	1	1	1	1	
6	800348	. SEAL RETAINER	1	1	1	1	
7	20462640	. COVER WASHER RESERVOIR	1	1	1	1	
8	800373	NUT NOZZLE ADAPTOR	4	4	4	4	
20	800371	VALVE CENTRAL	1	1	1	1	
21	504731	TIE RUBBER BELT, W/HOOK 15"	1	1	1	1	
22	504637	CABLE TIE / 3/16" x 13"	1	1	1	1	
23	800376	HOSE HEADLAMP WASHER / 5M	AR	AR	AR	AR	
30	800372	NOZZLE SEALBEAM WASHER	4	4	4	4	
31	800374	SPACER NOZZLE WASHER	4	4	4	4	
32	502881	NUT HEX JAM THN 5/8-18x3/8 N500	4	4	4	4	
33	800369	ELBOW NOZZLE ADAPTOR	6	6	6	6	
34	800370	TEE CONNECTOR	2	2	2	2	
35	800375	ADAPTOR WALL / FRONT FACE	2	2	2	2	
36	800373	NUT NOZZLE ADAPTOR	2	2	2	2	
37	507214	O-RING	2	2	2	2	
NS	300563	RESERVOIR SUPPORT FOR HOOK / HEADLAMP WASH.	2	2	2	2	
NS	300570	RESERVOIR SUPPORT SIDE	4	4	4	4	
41	509815	TIE MOUNT / ATTACHMENT W/TREE MOUNT	4	4	4	4	
50	430632	RETROFIT KIT, HEADLAMP WASHER / SERIES "XLII" & "X3"	1	1	1	1	

From Y-7046 To 8-9339		Date:07/2024	PAGE:Y2-2310-00
HORN - INSTALLATION			

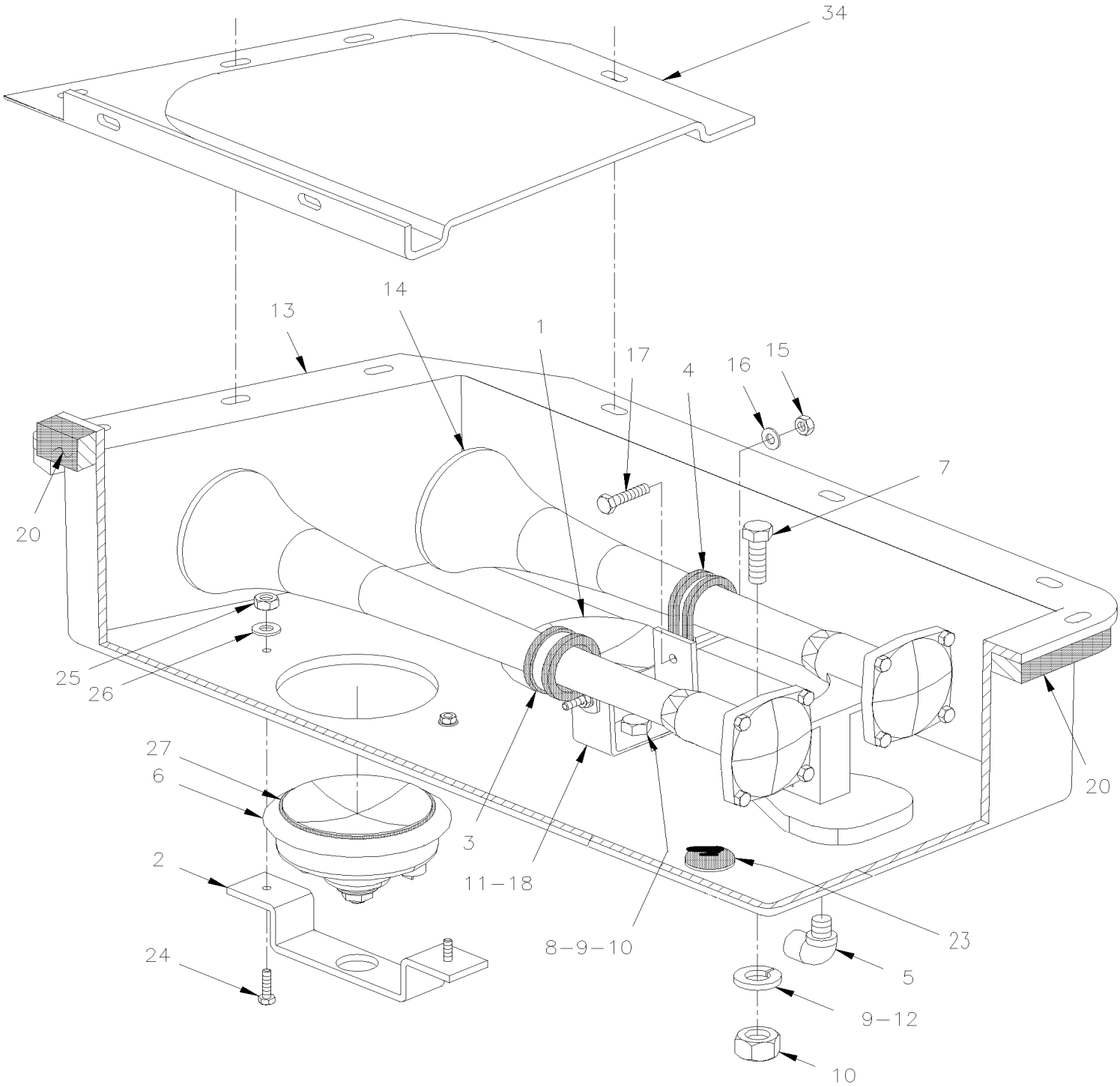

From Y-7046 To 8-9339		Date:07/2024	PAGE:Y2-2310-00

HORN - INSTALLATION

Item#	Part	Description	XLII 45	XLII MTH40	XLII MTH45	XLII MTH45E	NOTES
1	563036	HORN 12V-445HZ	1	1	1	1	
2	142094	SUPPORT To 3-8077	1	1	1	1	
2	142283	SUPPORT From 3-8078	1	1	1	1	
NS	680066	ADHESIVE / ADBOND #5014 / 23.6ML BOTTLE From 3-8078	AR	AR	AR	AR	
3	952635	CLAMP / 1" I.D.	1	1	1	1	
4	952639	CLAMP / 1"1/4 I.D.	1	1	1	1	
5	641369	MALE ELBOW 90° NON-SWIVEL / PUSH-IN FITTING / #4x1/8NPT-M BR	1	1	1	1	
NS	680098	THREAD SEALANT LOCTITE #567 / WHITE / 250ml	AR	AR	AR	AR	
6	563035	HORN 12V-335HZ	1	1	1	1	
7	500182	SCREW CAP HEX 5/16-18x1 1/4 G5 PT Z050 To 3-8077	1	1	1	1	
7	500544	SCREW CAP HEX M8-1.25x30 G8.8 Z050 From 3-8078	1	1	1	1	
8	500179	SCREW CAP HEX 5/16-18x3/4 G5 Z050 To 3-8077	1	1	1	1	
8	502790	SCREW CAP HEX M8-1.25x20 G8.8 Z050 From 3-8078	1	1	1	1	
9	500476	WASHER LO SPT .317x.586x.078 Z050 To 3-8077	2	2	2	2	
10	500778	NUT HEX 5/16-18 N500 To 3-8077	2	2	2	2	
11	141122	REINFORCEMENT To 3-8077	1	1	1	1	
12	141121	REINFORCEMENT To 3-8077	1	1	1	1	
13	142098	PLASTIC BOX, HORN To 3-8077	1	1	1	1	
13	142286	PLASTIC BOX, HORN From 3-8078	1	1	1	1	
14	640093	HORN AIR	1	1	1	1	
15	500590	NUT HEX NYRT M4-0.7 Z050	2	2	2	2	
16	500591	WASHER FL 4.3x9.0x0.8 Z050	2	2	2	2	
17	500588	SCREW CAP HEX M4-0.7x20 G8.8 Z050	2	2	2	2	
18	141120	SUPPORT / AIR HORN	1	1	1	1	
20	506339	TAPE RUB ADH1 NIT 1/4" x 1" x 35' / BLACK 1220	AR	AR	AR	AR	
21	065593	ALARM "KNEELING" To 6-8906	1				
. NS	563164	. ALARM "KNEELING" To 6-8906	1				
22	502631	SCREW CAP HEX M6-1.0x20 G8.8 Z050 To 6-8906	2				
23	504625	GROMMET / .250x.750x.250x.437x1.000 To 6-8906	1				
NS	504317	PLUG BUTTON / .718 O.D. / NICKEL		1	1	1	
24	5001036	SCREW MA PAN PH M4-0.7x10 Z050 To 3-8077	4	4	4	4	
25	500590	NUT HEX NYRT M4-0.7 Z050 To 3-8077	4	4	4	4	
26	500964	WASHER FL .203x.500x.047 Z050 To 3-8077	8	8	8	8	
27	142135	GASKET	2	2	2	2	
31	065593	ALARM "KNEELING" From 3-8078	1	1	1	1	
. NS	563164	. ALARM "KNEELING" From 3-8078	1	1	1	1	
32	504317	PLUG BUTTON / .718 O.D. / NICKEL From 3-8078	1	1	1	1	
33	502631	SCREW CAP HEX M6-1.0x20 G8.8 Z050 From 3-8078	2	2	2	2	
34	142309	DEFLECTOR From 3-8138	1	1	1	1	
NS	500658	SCREW TC PAN PH #10-24x3/4 Z050 From 3-8138	13	13	13	13	
NS	500964	WASHER FL .203x.500x.047 Z050 From 3-8138	13	13	13	13	
NS	065257	HARNESS / HORN & CONNECTOR	1	1	1	1	

From Y-7046 To 8-9339		Date:07/2024	PAGE:Y2-2310-00

HORN - INSTALLATION

Item#	Part	Description	XLII 45	XLII MTH40	XLII MTH45	XLII MTH45E	NOTES
NS	680111	GREASE PROTECTIVE / NYK77 (8 oz)	AR	AR	AR	AR	
NS	680065	TAPE COMPOUND / BLACK / 1/32" X 1" X 33' / L163-2400	AR	AR	AR	AR	

From Y-7046 To 6-8906		Date:07/2024	PAGE:Y2-2315-00
SOUND SYSTEM & ACCESSORIES - "R.E.I."			

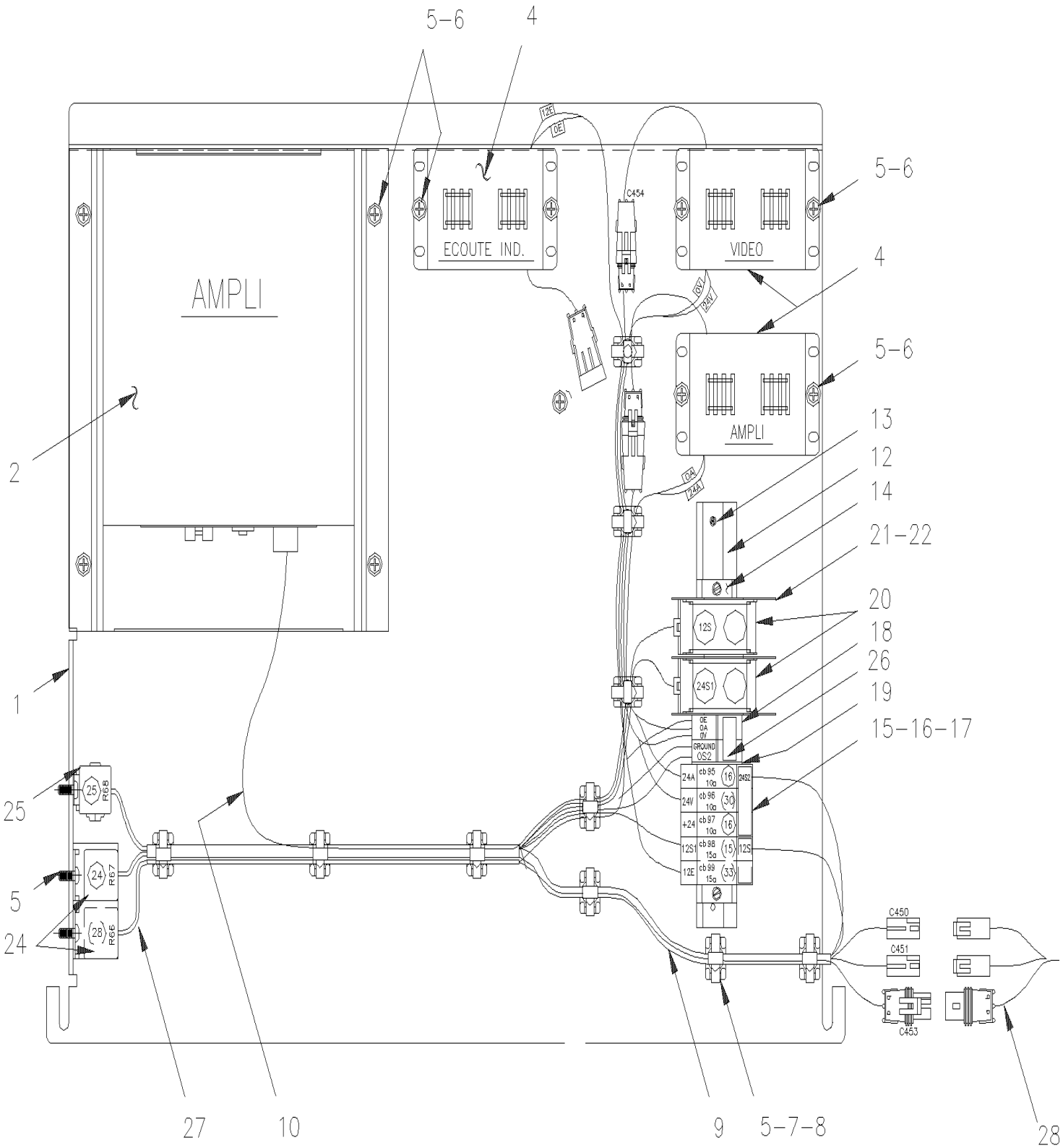

From Y-7046 To 6-8906		Date:07/2024	PAGE:Y2-2315-00
SOUND SYSTEM & ACCESSORIES - "R.E.I."			

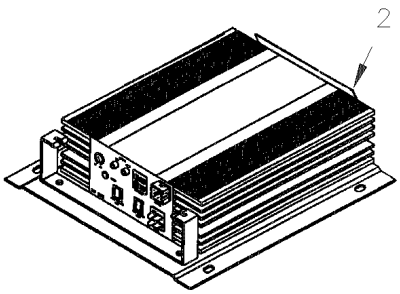

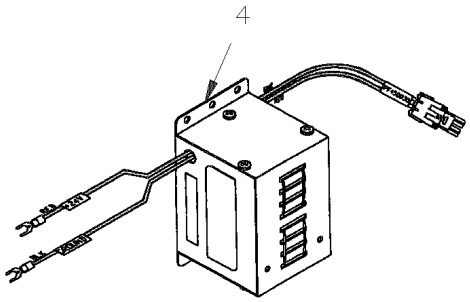

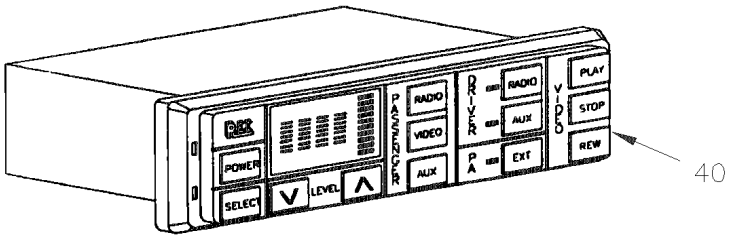

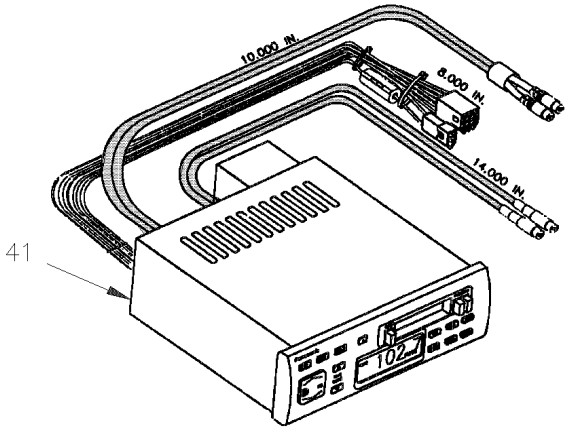

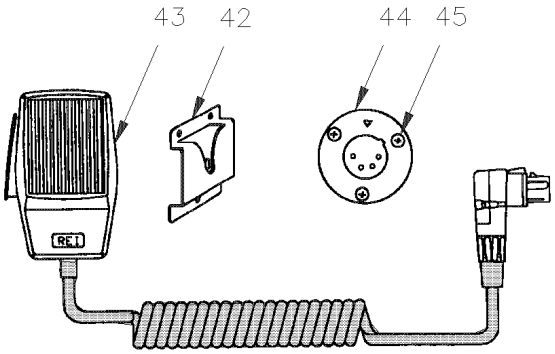

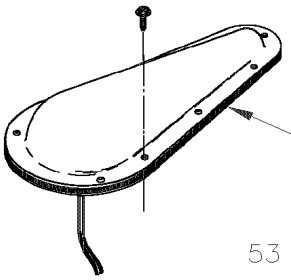

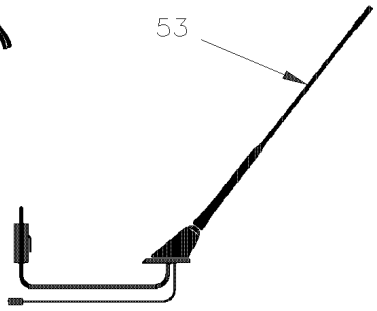

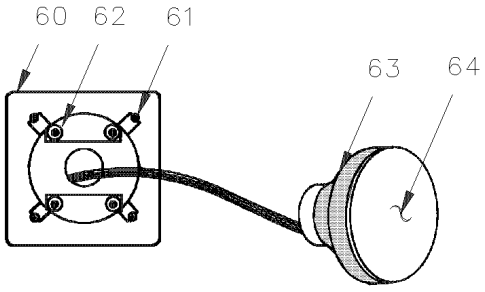

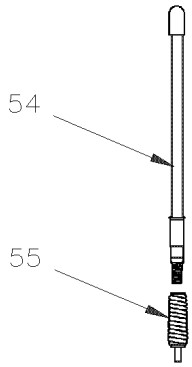

From Y-7046 To 6-8906		Date:07/2024	PAGE:Y2-2315-00

SOUND SYSTEM & ACCESSORIES - "R.E.I."

Item#	Part	Description	XLII 45	XLII MTH40	XLII MTH45	XLII MTH45E	NOTES
		PA & AMPLI PLATE ASSY / SOUND SYSTEM	1				E
1	404296	. PLATE MOUNTING	1				E
2	900802	. AMPLI AUDIO & VIDEO / SYST 2000 To 2-7807	1				G
2	901056	. AMPLI AUDIO & VIDEO / SYST 3000 From 2-7808	1				
2	901491	. ADAPATER / AMPLI AUDIO & VIDEO / SYST 3000 To 2-7807	1				G
4	404225	. NOISE FILTER / P/A, VIDEO & HOOKUP INDIVIDU / 450030	AR				
5	500657	. SCREW TC TR PH #10-24x1/2 Z050	AR				
6	500964	. WASHER FL .203x.500x.047 Z050	AR				
7	504013	. TIE MOUNT / 1/4" X 1/4" I.D.	10				
8	504637	. CABLE TIE / 3/16" x 13"	AR				
9	404252	. CABLE ASSY / MASTER	1				
10	404256	. CABLE ASSY / FILTER & AMPLI / 28" To 2-7807	1				
10	405314	. CABLE ASSY 28" / FILTER & AMPLI From 2-7808	1				
12	380885	. RAIL SUPPORT / 225MM	1				
13	504006	. RIVET POP CK OE 1/8x5/16 AL	3				
14	561729	. STOPPER	2				
NS	405134	. HEAD PROTECTOR ASSY 700MM	1				F
NS	404402	. SUPPORT / PLATE ASSY	1				
NS	404579	. DECAL "SOUND SYSTEM"	1				
15	561793	. BREAKER 15AMPS / 24V /	1				
16	561792	. BREAKER 10AMPS / 24V /	2				
17	380887	. BUS BAR / W/3 HOLES 38MM	2				
NS	381236	. DUMMY ASSY W/SCREW	1				
17	502531	. SCREW CAP HEX M6-1.0x16 G8.8 Z050	3				
18	561726	. BLOCK JUNCTION	2				
19	561728	. END CLOSING	1				
20	561727	. JUNCTION BLOCK	2				
21	561731	. COVER SUPPORT	3				
22	561732	. COVER / PROTECTOR / 2 BLOCKS	1				
24	561707	. RELAY 24V S.P.D.T. W/RESISTOR / To 5-8577	2				
24	563332	. RELAY 24V S.P.D.T. W/RESISTOR / "VOLVO" (20374662) From 5-8578	2				
25	561991	. RELAY 24V S.P.S.T. / 70 AMPS N.O.	1				
26	380886	. BUS BAR / W/2 HOLES 25MM	2				
27	404284	CABLE ASSY / VIDEO FILTERS VCP & AMPLI	1				
28	404876	. CABLE ASSY / DASH & PLATE IN BAGGAGE To 1-7436	1				
28	405183	. CABLE ASSY / DASH & PLATE IN BAGGAGE From 1-7437 To 2-7807	1				
28	405315	. CABLE ASSY / DASH & PLATE IN BAGGAGE From 2-7808 To 4-8270	1				
28	405484	CABLE ASSY / DASH & PLATE IN BAGGAGE From 4-8271 To 5-8592	1				
28	409124	CABLE ASSY / DASH & PLATE IN BAGGAGE From 5-8593 To 6-8797	1				
28	409148	CABLE ASSY / DASH & PLATE IN BAGGAGE From 6-8798	1				
40	900803	CONTROL HEAD / "R.E.I." SYSTEM 2000	1				
. NS	563064	. BULB (CONTROL HEAD GREEN) / 12VOLTS / 2700	1				

From Y-7046 To 6-8906		Date:07/2024	PAGE:Y2-2315-00

SOUND SYSTEM & ACCESSORIES - "R.E.I."

Item#	Part	Description	XLII 45	XLII MTH40	XLII MTH45	XLII MTH45E	NOTES
41	900984	RADIO "PANASONIC" CQ-DP22 / AM/FM/CD / 700717 To 2-7809	1				
41	901053	RADIO "PANASONIC" CD-DF401U (CQ-DP102U) / AM/ / (700721 or 700788) From 2-7810 To 6-8797	1				
41	901179	RADIO "PANASONIC" CQ-C3301U / AM/FM/CD & XM / 700966 >> 710171 From 6-8798	1				
41	903302	RADIO "R.E.I." R805 MOD2000 / AM/FM/CD/MP3 / 710152	1				
41	900917	RADIO "PANASONIC" CQ-R 115 SEUC / 700590 To 1-7450	1				
41	901032	RADIO "PANASONIC" CQ-R 145 CAHH / 700760 or 700914 From 1-7451	1				
42	900859	BRACKET, MOUNTING / MICROPHONE	1				
NS	500638	SCREW TP PAN PH #8x1/2 Z050	3				
42	**7770304**	**HANDS FREE MICROPHONE**	1				
43	900808	MICROPHONE / W/6' CORD / "REI" TYPE C.B.	1				
. NS	900721	. CONNECTOR MICROPHONE 90° / R4F	1				
43	900829	MICROPHONE / W/10' CORD / "REI" TYPE C.B.	1				
. NS	900721	. CONNECTOR MICROPHONE 90° / R4F	1				
. NS	900900	. CABLE MICROPHONE 10' / "REI"	1				
43	901286	MICROPHONE / W/10' CORD / "REI" TYPE C.B.	1				
. NS	900721	. CONNECTOR MICROPHONE 90° / R4F	1				
. NS	900900	. CABLE MICROPHONE 10' / "REI"	1				
44	404226	OUTLET, MICROPHONE / 12" W/CONNECTOR	AR				
44	900247	. OUTLET / MICROPHONE	1				
NS	404239	CABLE ASSY / "Y" FOR MICROPONE 9" / 1F/2M	1				
45	504108	RIVET POP DOME OE 1/8x1/2 AL	3				
52	900668	ANTENNA ASSY / CELLULAR / "TEARDROP" To 5-8465	1				
52	901124	ANTENNA ASSY / CELLULAR From 5-8466	1				
53	900661	ANTENNA, RADIO / W/AMPLIFIER	1				
. NS	901068	. ANTENNA STICK / REPLACEMENT	1				
NS	900663	ADAPTOR / RADIO & ANTENNA CABLE / MOTOROLA MALE to EURO FEMA	1				
NS	900875	CABLE RADIO ANTENNA / M/F 6`	1				
NS	900775	Y RADIO ANTENNA CABLE / TO USE W/2 RADIOS	AR				
54	900472	ANTENNA ASSY / C.B. / 25"	1				
55	900895	SPRING EXTENSION / .828 O.D. x 3.010 X .104 W/3/8	1				
NS	900889	CABLE, ANTENNA 22' / 511386	1				
60	405063	RECEPTACLE ASSY / DRIVER'S To 1-7428	2				
61	502811	NUT SPR J #8A-B .168-.198	8				
NS	500360	SCREW TP FL PH #8x1 1/4 BK	8				
62	500643	SCREW TP PAN PH #12x3/4 Z050	8				
NS	500440	WASHER FL .250x.562x.065 Z050	8				
63	900874	SPEAKER / 5 1/4" DRIVER'S To 1-7428	2				A
63	901050	SPEAKER "JVC" 30WATTS	2				B
63	901025	SPEAKER / 4" DRIVER`S From 1-7429 To 3-8067	2				
63	901050	SPEAKER "JVC" 30WATTS From 3-8068	2				
64	900873	GRILLE / 5 1/4" SPEAKER To 1-7428	2				A
64	901024	GRILL SPEAKER "JVC" From 1-7429 To 1-7695	2				B

From Y-7046 To 6-8906		Date:07/2024	PAGE:Y2-2315-00

SOUND SYSTEM & ACCESSORIES - "R.E.I."

Item#	Part	Description	XLII 45	XLII MTH40	XLII MTH45	XLII MTH45E	NOTES
64	901038	GRILLE / SPEAKER STAMPED "PREVOST" From 1-7696	1				
NS	500649	SCREW TP BDG PH #6x3/4 BK To 1-7428	AR				
NS	502665	SCREW TP OV PH #6x3/4 SS EMN From 1-7429	4				
NS	404762	CABLE ASSY / DRIVER'S SPEAKER & CONSOLE To 1-7428	1				
NS	405181	CABLE ASSY / DRIVER'S SPEAKER & CONSOLE From 1-7429	1				
NS	900976	MICROPHONE / W/GOOSE NECK 37" To 1-7691	1				
70	901045	MICROPHONE / W/GOOSE NECK 36" From 1-7992	1				
NS	504234	SPRING CLIP 5/16"	2				D
NS	500409	SCREW TP PAN PH #8x1/2 BK	2				
NS	404430	SUPPORT GOOSE NECK	1				
NS	500576	SCREW TC PAN PH #6-32x1/2 Z050	3				
NS	404285	HARNESS ASSY / MAIN CONTROL 2000 SYSTEM	1				
NS	404302	CABLE ASSY 20' / 510520 /	1				
NS	404283	CABLE ASSY / FILTER VCP & CONTROL HEAD / 20'	1				
NS	404251	CABLE ASSY / AMPLI & SPEAKER /16'	1				
NS	404255	CABLE ASSY / 24V POWER / 13"	1				
NS	404291	CABLE ASSY / MASTER P/A & BACK-UP P/A / 12"	1				
NS	404231	CABLE ASSY / MICRO M/F / 10'	1				
NS	404289	CABLE ASSY / MICRO M/M / 20'	1				
NS	404239	CABLE ASSY / "Y" FOR MICROPONE 9" / 1F/2M	1				
NS	405314	CABLE ASSY 28" / FILTER & AMPLI	1				H
NS	405319	CABLE ASSY / RCA TO AMPLI / SERVICE	1				H
NS	405320	CABLE ASSY / POWER 9 CIRC TO 8 CIRC / SERVICE	1				H
NS	405321	CABLE ASSY SPEAKER / CINCH TO MOLEX / SERVICE	1				H
		A) SOLD ALSO IN KIT 900887					
		B) USE WITH "ORLEAN OPTION"					
		D) TO FIX GOOSE NECK TO POST					
		E) THIS PLATE IS LOCATED IN 1ST L.H. BAGGAGE COMPARTMENT					
		F) "OPTION" ORLEAN EXPRESS					
		G) THIS AMPLI IT SUPPERSEEDED BY #901056 + #405320 + #405321 + 405319 + 405314 & 901491					
		H) FOR SERVICE ONLY					

From Y-7046 To 6-8906		Date:07/2024	PAGE:Y2-2315-20
INDIVIDUAL STATIONS - "R.E.I."			

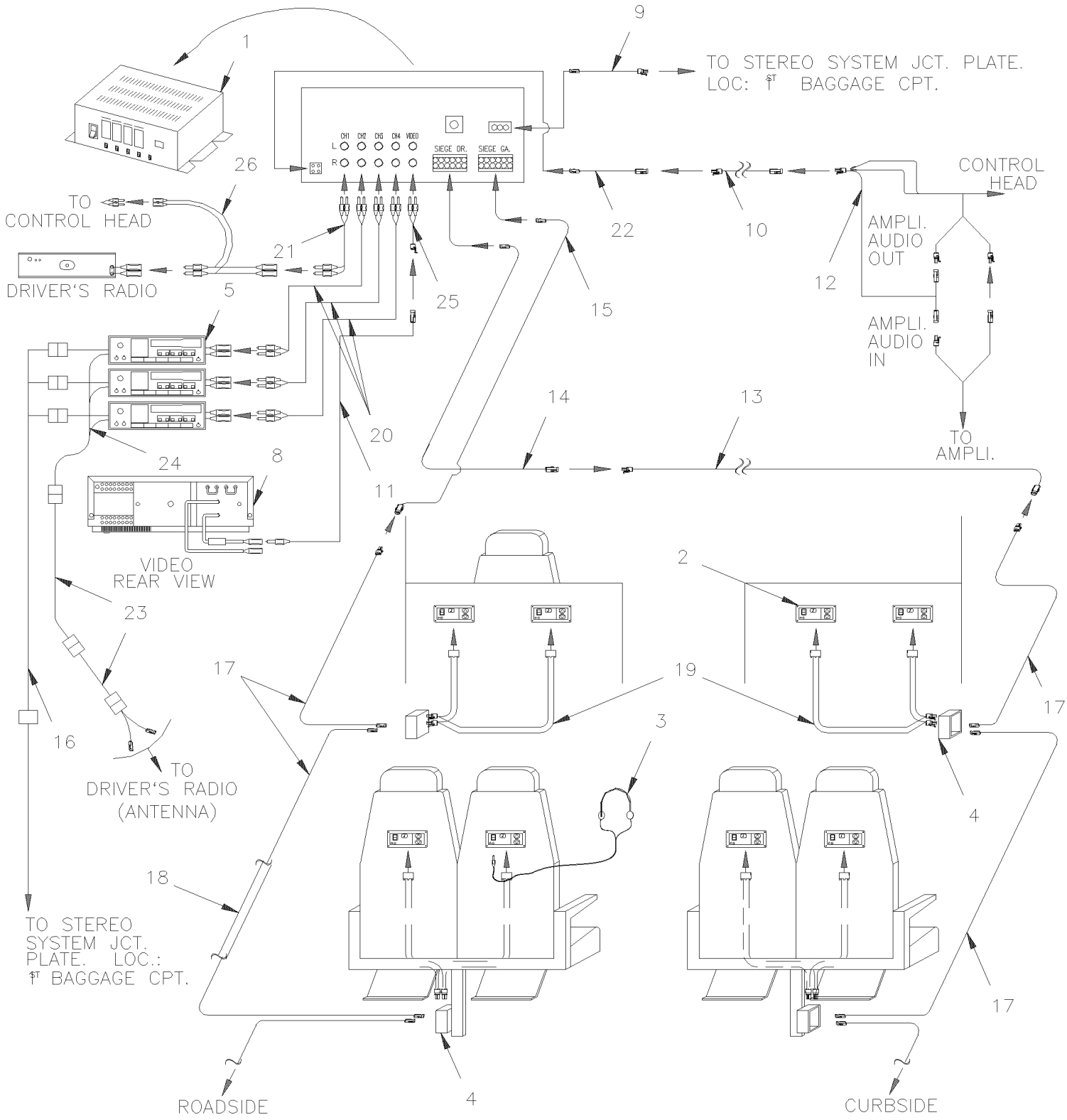

NOTE: RADIOS, ITEM #1, ARE LOCATED IN THE PARCEL RACK ON LEFT SIDE (2 DOOR).

From Y-7046 To 6-8906		Date:07/2024	PAGE:Y2-2315-20

INDIVIDUAL STATIONS - "R.E.I."

Item#	Part	Description	XLII 45	XLII MTH40	XLII MTH45	XLII MTH45E	NOTES
1	900845	ENTERTAINER CONTROL MODULE	1				
NS	404542	SIDE PANEL FINISHING	2				
2	900827	SELECTOR HEAD SET MODULE To 1-7296	AR				
2	901006	SELECTOR HEAD SET MODULE From 1-7297	AR				
NS	363644	HEADREST REINFORCEMENT	AR				B
3	900881	HEAD SET EARPHONE	AR				
. NS	900882	. FOAM CUSHION PAD / (SET OF 2) / FOR 900881	1				
4	900828	JUNCTION BOX MODULE SINGLE To 1-7296	AR				
4	900899	JUNCTION BOX MODULE DOUBLE To 1-7296	AR				
4	901007	JUNCTION BOX MODULE SINGLE From 1-7297	AR				
NS	405197	SUPPORT CONTROLE AUDIO	AR				
NS	502631	SCREW CAP HEX M6-1.0x20 G8.8 Z050	4				
NS	5001432	WASHER LO INT .256x.478x.028 SS 410	4				
NS	502511	NUT HEX NYRT M6-1.0 Z050	4				
NS	504622	GROMMET / 1.500x1.750x.062x.437x2.125	1				
NS	952624	CLAMP / 1/4" I.D.	1				
5	900853	RADIO "SONY" XR350MK2 AM/FM/CASS.	1				
5	900869	RADIO "SONY" CDX2160 AM/FM/CD To 1-7667	1				
5	901046	RADIO "SONY" CDXL550X AM/FM/CD From 1-7668	1				
5	900849	PLATE RADIO "DUMMY"	AR				
5	404488	SUPPORT, RADIO	1				
NS	502698	SCREW MA PAN PH M4-0.7x16 SS BK	1				
NS	500022	WASHER LO INT .168x.340x.023 Z050	1				
8	**Y2-2317-20**	**VIDEO VHS PLAYER - INSTALLATION "R.E.I."**					
8	900842	CD CHARGER / 6 DISCS / "PANASONIC" CX-DP 601 To 1-7138	1				
8	900911	. CARTRIDGE 6 DISCS To Y-7138	1				
8	900987	CD CHARGER / 8 DISCS / "PANASONIC" CX-DP801 / MODIFIED From Y-7139 To 2-7869	1				
8	901057	CD CHARGER / 8 DISCS / "PANASONIC" CX-DP88 / MODIFIED From 2-7870	1				
9	064486	CABLE ASSY 24V POWER / ENT MODULE / 33.5'	1				
10	404302	CABLE ASSY 20' / 510520 /	1				
11	404380	CABLE ASSY RCA / M/M / USE WITH 2 VIDEOS / 510300	1				
NS	900857	CABLE ASSY / CD & RADIO IN DASH To Y-7138	1				
11	900988	CABLE ASSY / CD & RADIO IN DASH From Y-7139 To 2-7869	1				
11	901058	CABLE ASSY CD / DIN / 280" From 2-7870	1				
11	901059	CABLE RCA / 2M/2M / 23' From 2-7870	1				
12	404288	CABLE ASSY / "Y" 9" CONTROL HEAD & ENTERTAINMENT MODULE	1				
13	404363	CABLE ASSY 14.5' To 1-7196	1				
13	901021	CABLE ASSY From 1-7197	1				
14	404499	CABLE ASSY / ENTERTAINMENT MODULE RIGHT SEAT To 1-7196	1				
14	901020	CABLE ASSY / ENTERTAINMENT MODULE RIGHT SEAT From 1-7197	1				
15	404497	CABLE ASSY / ENTERTAINMENT MODULE LEFT SEAT To 1-7196	1				
15	901019	CABLE ASSY / ENTERTAINMENT MODULE LEFT SEAT From 1-7197	1				

From Y-7046 To 6-8906		Date:07/2024	PAGE:Y2-2315-20

INDIVIDUAL STATIONS - "R.E.I."

Item#	Part	Description	XLII 45	XLII MTH40	XLII MTH45	XLII MTH45E	NOTES
16	404504	CABLE ASSY / RADIO POWER To 5-8592	1				
17	404275	CABLE ASSY / JCT BOX MODULE & JCT BOX MODULE To 1-7196	2				
17	901018	CABLE ASSY / 2 JCT BOX MODULES From 1-7197	1				
17	065567	CABLE ASSY / 2 JCT BOX MODULES	1				
18	325056	PROTECTOR MOULDING	1				
19	404269	CABLE SEAT ASSY "Y" 40" / JCT BOX & CHANNEL SELECTOR CHANNEL SELECTOR To 1-7196	2				
19	901008	CABLE SEAT ASSY / JCT BOX & CHANNEL SELECTOR From 1-7197	1				
19	404501	CABLE SEAT ASSY / JCT BOX & CHANNEL SELECTOR CHANNEL SELECTOR	1				A
20	900856	CABLE RCA / 2M/2M / 3'	1				
21	900855	CABLE RCA / 2M/2M / 20'	1				
22	404498	CABLE ADAPTOR INTER. MODULE / 511211	1				
23	900774	CABLE, ANTENNA EXTENSION / 12'	1				
24	900775	Y RADIO ANTENNA CABLE / TO USE W/2 RADIOS	AR				
25	900758	ADAPTOR "Y" RCA / 1F/2M / 9"	1				
26	900671	ADAPTOR "Y" RCA / 1M/2F / 4"	1				
NS	404525	INSULATING, NOISE	1				
		A) USE WITH SINGLE SEAT ONLY					
		B) USE WITH SELECTOR HEAD SET MODULE FIX ON THE HEADREST					

From Y-7046 To 4-8270		Date:07/2024	PAGE:Y2-2315-30
SOUND SYSTEM - "KARAOKE" & DVD			

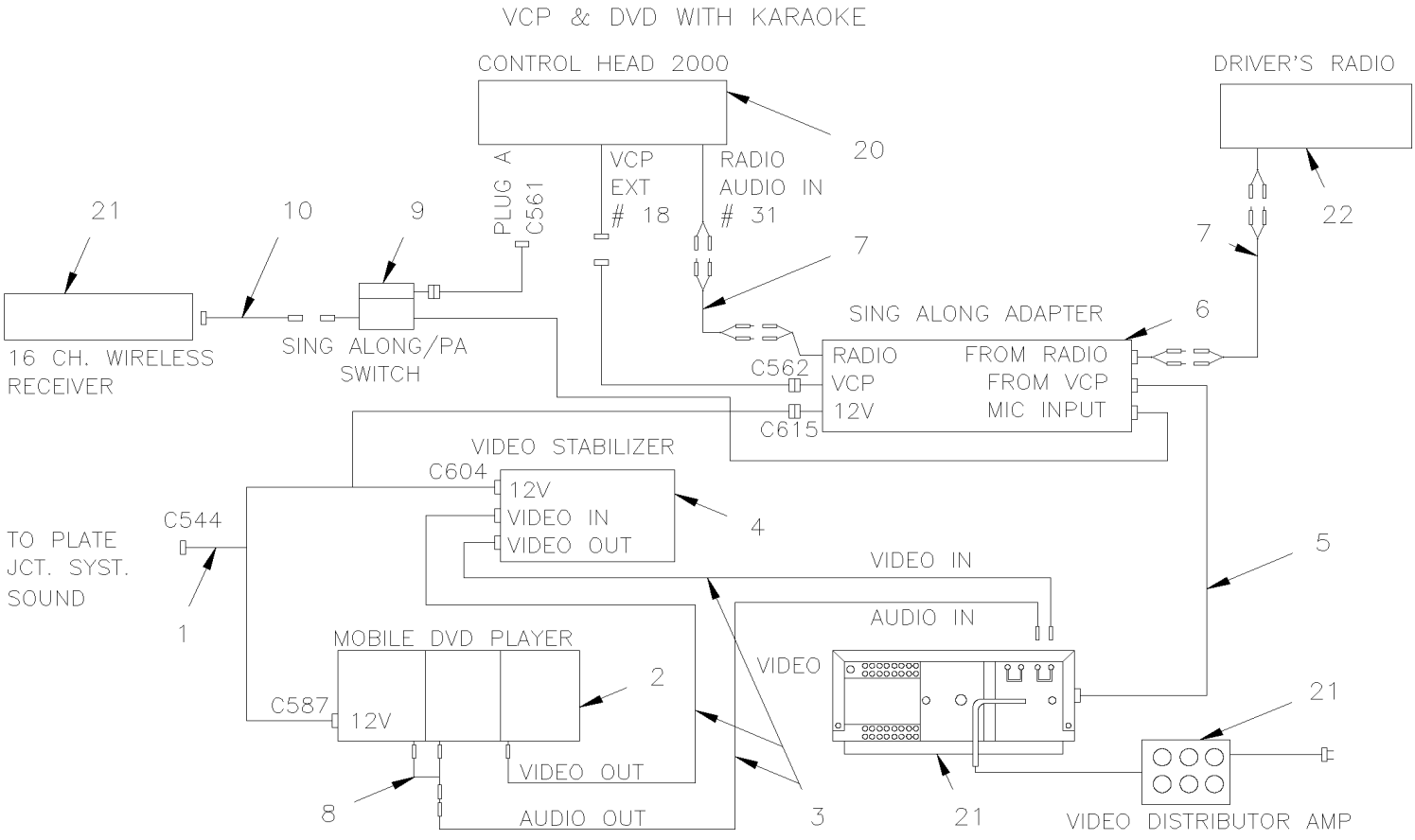

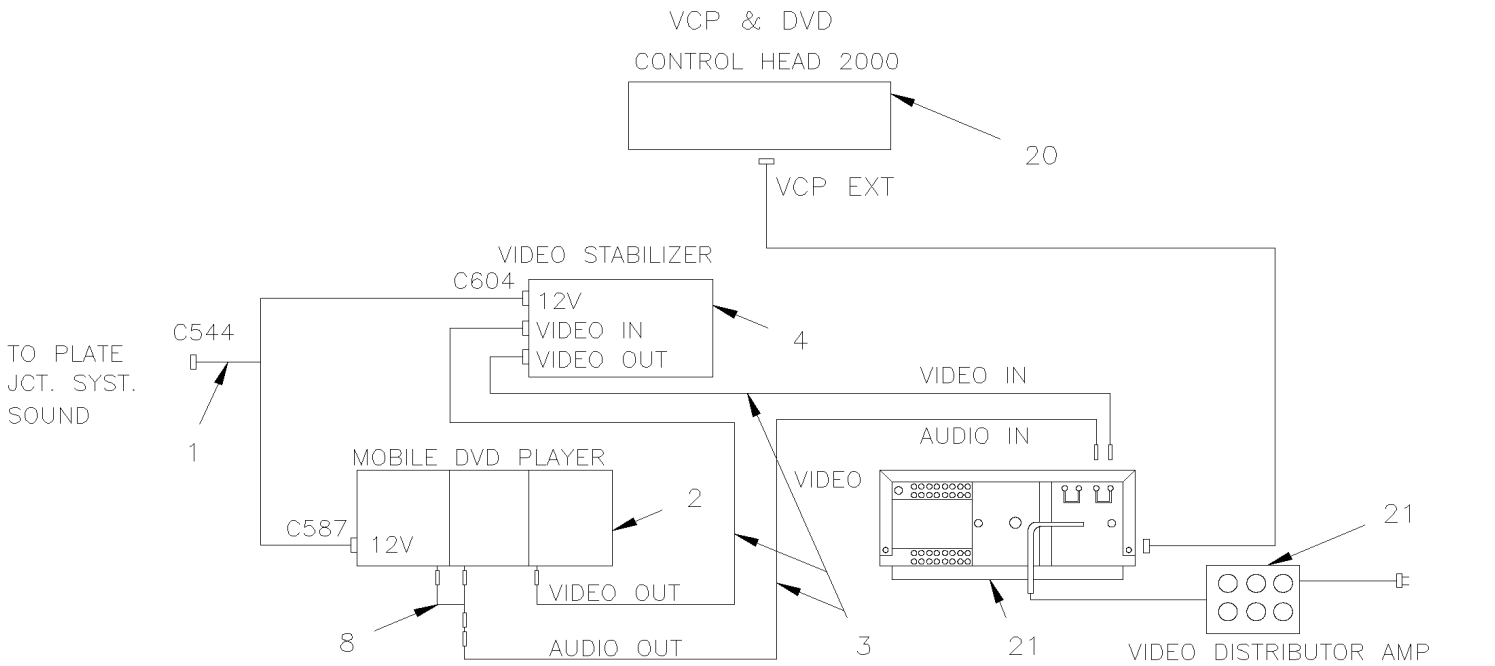

From Y-7046 To 4-8270		Date:07/2024	PAGE:Y2-2315-30

SOUND SYSTEM - "KARAOKE" & DVD

Item#	Part	Description	XLII 45	XLII MTH40	XLII MTH45	XLII MTH45E	NOTES
1	405187	CABLE ASSY DVD	1				
2	901033	DVD REI To 3-8022	1				
2	901069	DVD REI / MP3 From 3-8023	1				
3	404380	CABLE ASSY RCA / M/M / USE WITH 2 VIDEOS / 510300	1				
4	901034	STABILIZER VIDEO MODIFIED	1				A
5	405190	HARNESS INTERFACE VIDEO/SING ALONE ADAP	1				
6	901035	ADAPTOR KARAOKE	1				
7	900855	CABLE RCA / 2M/2M / 20'	1				
8	900758	ADAPTOR "Y" RCA / 1F/2M / 9"	1				
9	901036	SWITCH KARAOKE	1				
10	405191	HARNESS WIRE LESS MIC/SING ALONE ADAPTOR	1				
20	900803	CONTROL HEAD / "R.E.I." SYSTEM 2000	1				
. NS	563064	. BULB (CONTROL HEAD GREEN) / 12VOLTS / 2700	1				
21	**Y2-2317-20**	**VIDEO VHS PLAYER - INSTALLATION "R.E.I."**					
22	**Y2-2315-00**	**SOUND SYSTEM & ACCESSORIES - "R.E.I."**					
NS	405660	KIT, DVD REPLACMENT	AR				
. NS	IS-04036	. SEE INSTRUCTION SHEET	1				
NS	405659	KIT, VIDEO STABILIZATOR REPLACMENT	AR				
. NS	IS-03099	. SEE INSTRUCTION SHEET	1				
		A) THIS PART IS SUPERSEEDED BY KIT #405659					

From Y-7046 To 6-8906		Date:07/2024	PAGE:Y2-2315-60
ROOF ANTENNA & WIRING "R.E.I."			

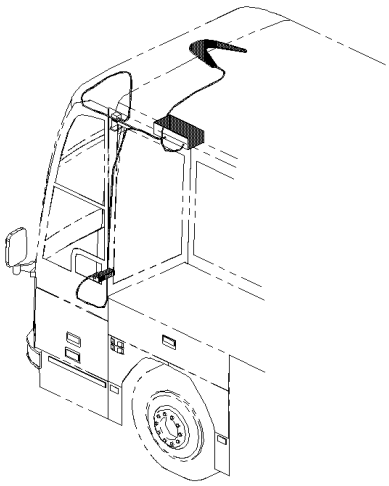

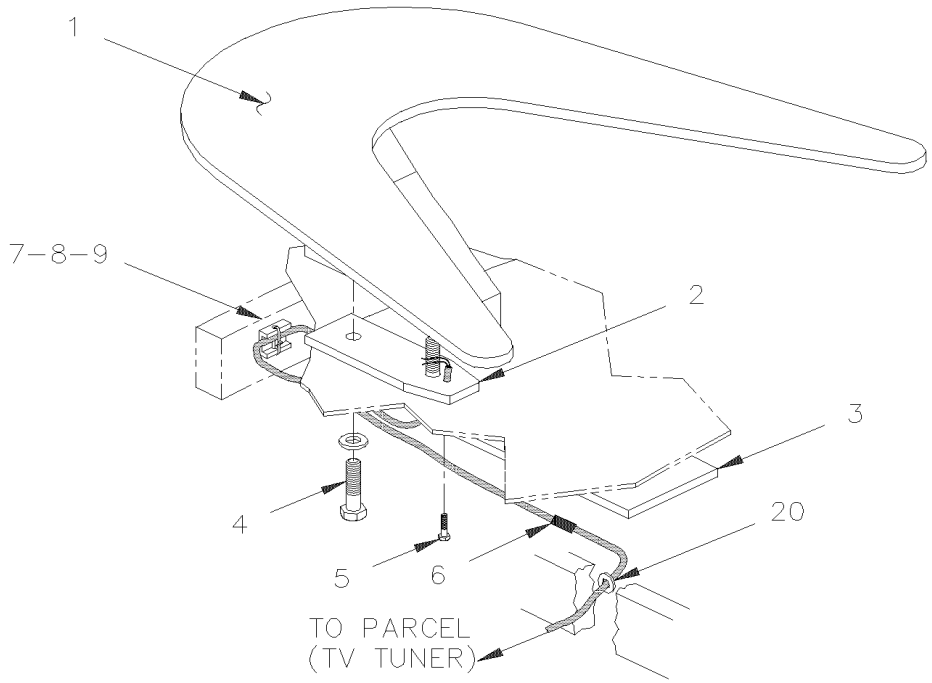

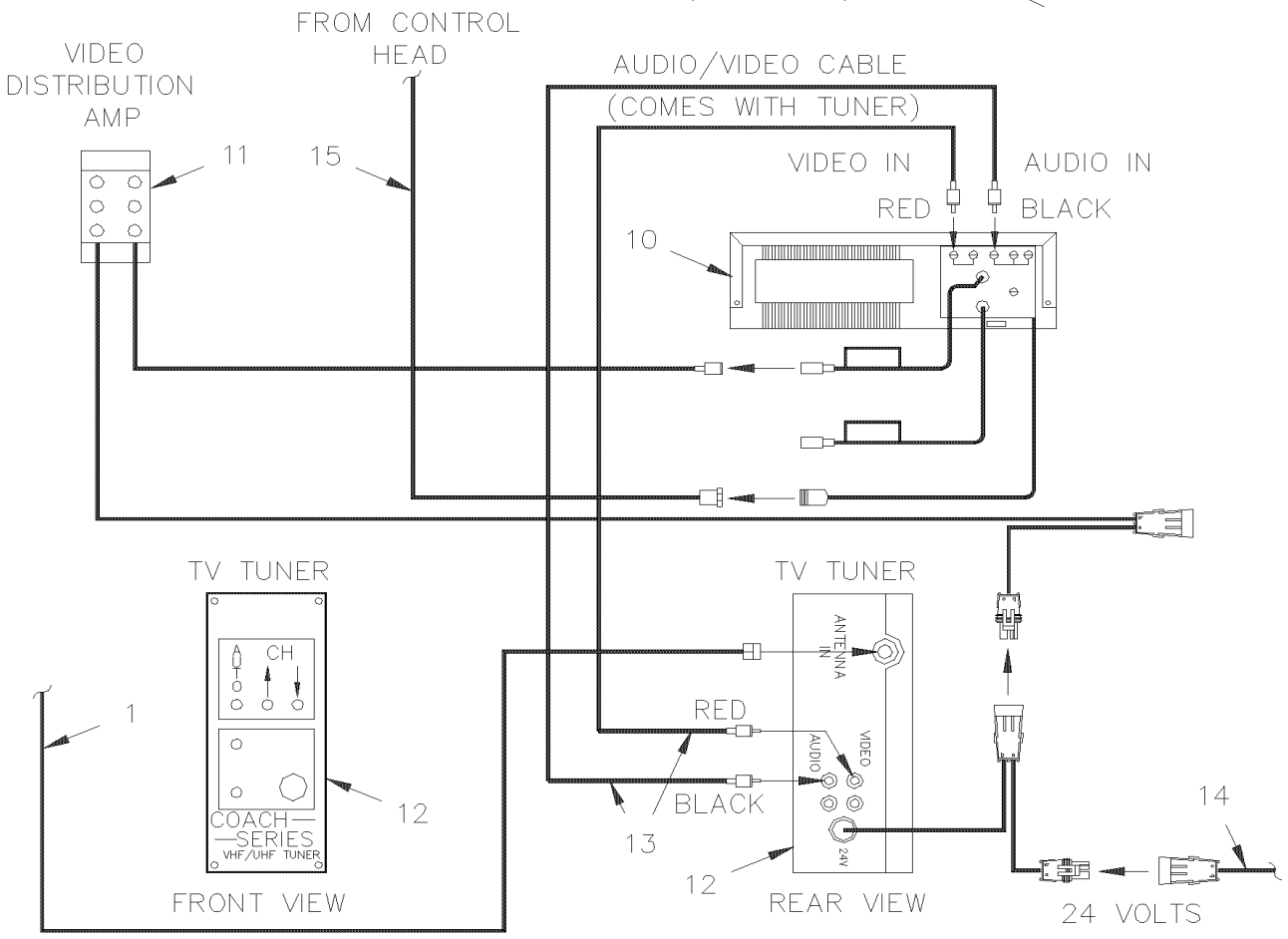

From Y-7046 To 6-8906		Date:07/2024	PAGE:Y2-2315-60

ROOF ANTENNA & WIRING "R.E.I."

Item#	Part	Description	XLII 45	XLII MTH40	XLII MTH45	XLII MTH45E	NOTES
1	900794	ANTENNA, ROOF / "WINTENNA" MODEL 2 3/4"	1				
NS	403355	DECAL / VEHICLE HEIGHT 11' 9"	1				
NS	901071	SATELLITE RADIO RECEIVER	1				S
NS	901072	ADAPTOR "Y" RCA / 1M/2M	1				S
NS	901073	CABLE RCA / 1M/1F / 6'	1				S
NS	901062	CABLE RCA / 2M/2F / 23'	1				S
NS	900758	ADAPTOR "Y" RCA / 1F/2M / 9"	1				S
2	403298	GASKET, ANTENNA	1				
3	404345	PLATE, REINFORCEMENT / ROOF	1				
4	5001209	SCREW CAP HEX M6-1.0x25 G8.8 Z050	1				
NS	500441	WASHER FL .312x.734x.065 Z050	1				
5	500617	SCREW TP PAN PH #8x1 Z050	1				
5	5001209	SCREW CAP HEX M6-1.0x25 G8.8 Z050	1				
5	500441	WASHER FL .312x.734x.065 Z050	1				
6	560786	SHRINK TUBING / .500" - .250" / BLACK / ALPHA FIT-300-1/2-4B	AR				
7	504006	RIVET POP CK OE 1/8x5/16 AL	4				
8	504013	TIE MOUNT / 1/4" X 1/4" I.D.	4				
9	504637	CABLE TIE / 3/16" x 13"	4				
10	**Y2-2317-20**	**VIDEO VHS PLAYER - INSTALLATION "R.E.I."**					
12	900814	TUNER TV 24V To 2-7744	1				
12	901054	TUNER TV 24V From 2-7745	1				
NS	404589	PROTECTOR VIDEO BOX	1				
NS	405186	INTERFACE CABLE ASSY	1				A
13	900785	CABLE RCA / 2M/2M / 10'	1				
14	404572	CABLE ASSY / DASH COMPONENT & HARNESS ABOVE To 1-7436	1				
14	405183	CABLE ASSY / DASH & PLATE IN BAGGAGE From 1-7437 To 2-7807	1				
14	405315	CABLE ASSY / DASH & PLATE IN BAGGAGE From 2-7808 To 4-8270	1				
14	405484	CABLE ASSY / DASH & PLATE IN BAGGAGE From 4-8271	1				
14	404571	CABLE ASSY / DASH & PARCEL RACK To 6-8797	1				
14	409149	CABLE ASSY / DASH & PARCEL RACK / AUDIO From 6-8798	1				
15	404283	CABLE ASSY / FILTER VCP & CONTROL HEAD / 20'	1				
20	504063	GROMMET / .562x.812x.062x.312x1.062	1				
		A) USE WITH #901054 UP TO 2-7744					
		S) WITH SATELLITE RADIO RECEIVE					

From RETROFIT		Date:07/2024	PAGE:Y2-2315-99
SUBWOOFER - INSTALLATION			

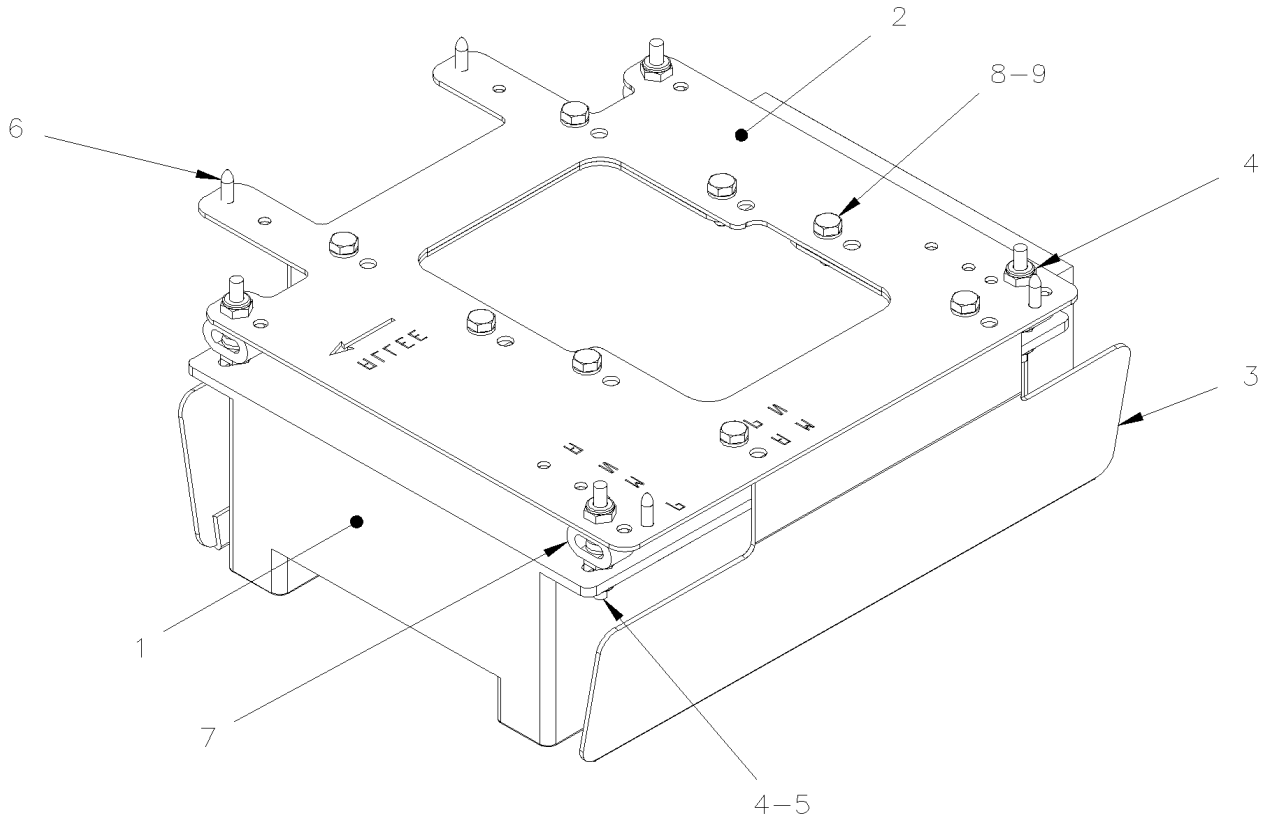

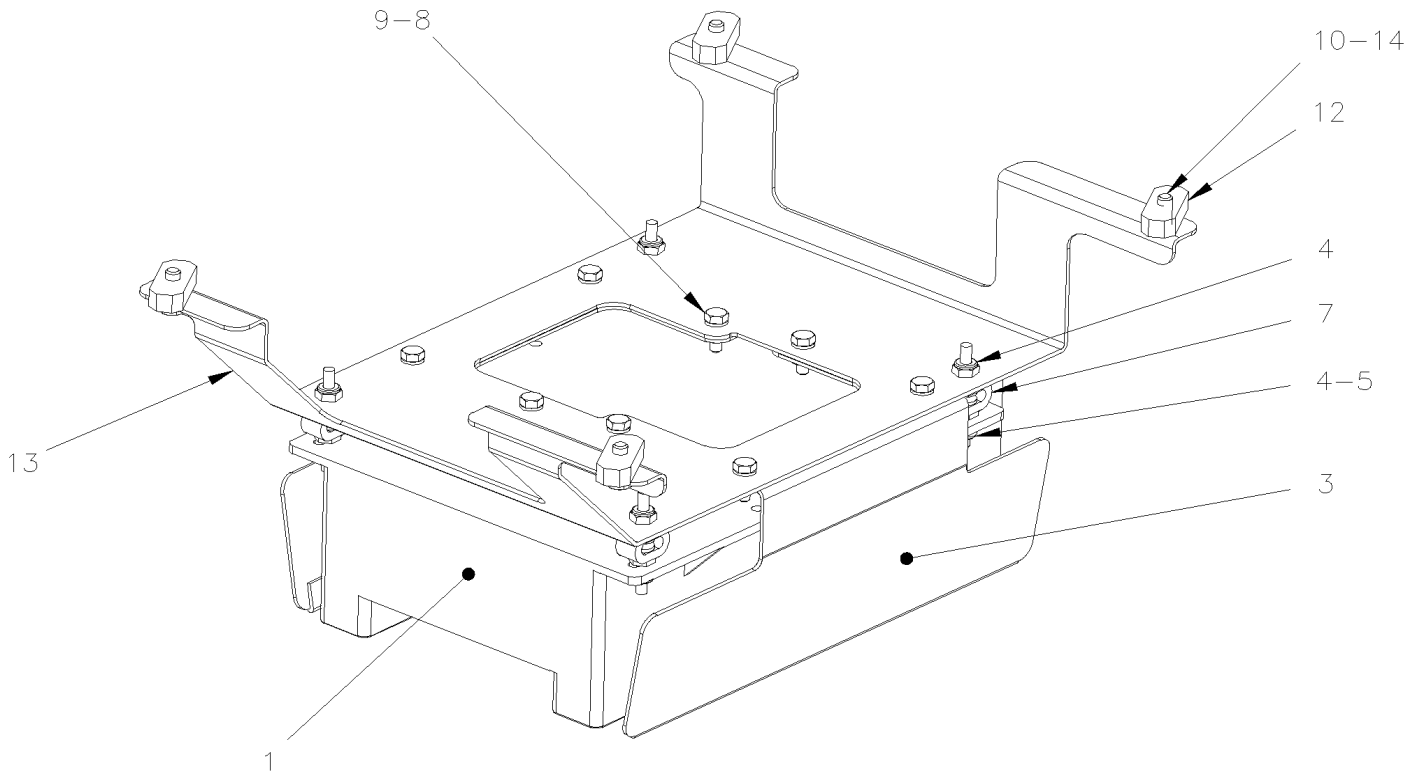

From RETROFIT		Date:07/2024	PAGE:Y2-2315-99

SUBWOOFER - INSTALLATION

Item#	Part	Description	XLII 45	XLII MTH40	XLII MTH45	XLII MTH45E	NOTES
1	901193	SUBWOOFER ASSY	1				
2	405780	PLATE MOUNTING	1				
3	405829	DEFLECTOR SPEAKER	2				
4	502874	NUT HEX NYRT 1/4-20 N500	8				
5	500877	WASHER FL .250x.562x.065 N500	8				
6	500526	SCREW TP CAP HEXW #12x3/4 N500	4				
7	5060076	RUBBER CUSHION ABSORBANT	4				
8	500163	SCREW CAP HEX 1/4-20x3/4 G5 Z050	16				
9	500473	WASHER LO SPT .262x.489x.062 Z050	16				
10	500476	WASHER LO SPT .317x.586x.078 Z050	4				A
12	5001642	T NUT 5/16-18	4				A
13	405787	PLATE MOUNTING "AMERICAN SEATING ONLY"	1				A
14	500179	SCREW CAP HEX 5/16-18x3/4 G5 Z050	4				A
NS	405851	KIT , SUBWOOFER ASSY / SERIES "XL"	1				B C
NS	066743	. CABLE EXTENSION 2M / SUBWOOFER	2				
NS	066817	. CABLE ASSY W/SUBWOOFER / SERIES "XL"	1				
		A) USE ONLY WITH "AMERICAN SEATING" ONLY					
		B) THIS KIT DO NOT INCLUDE FOLLOWING ITEMS.: # 2 OR 13 & 10, 12 & 14					
		C) THIS KIT DO NOT INCLUDE FOLLOWING ITEMS.: # 2 OR 13 & 10, 12 & 14					

From Y-7046 To 6-8578		Date:07/2024	PAGE:Y2-2317-00
FRONT MONITOR - VIDEO - "R.E.I."			

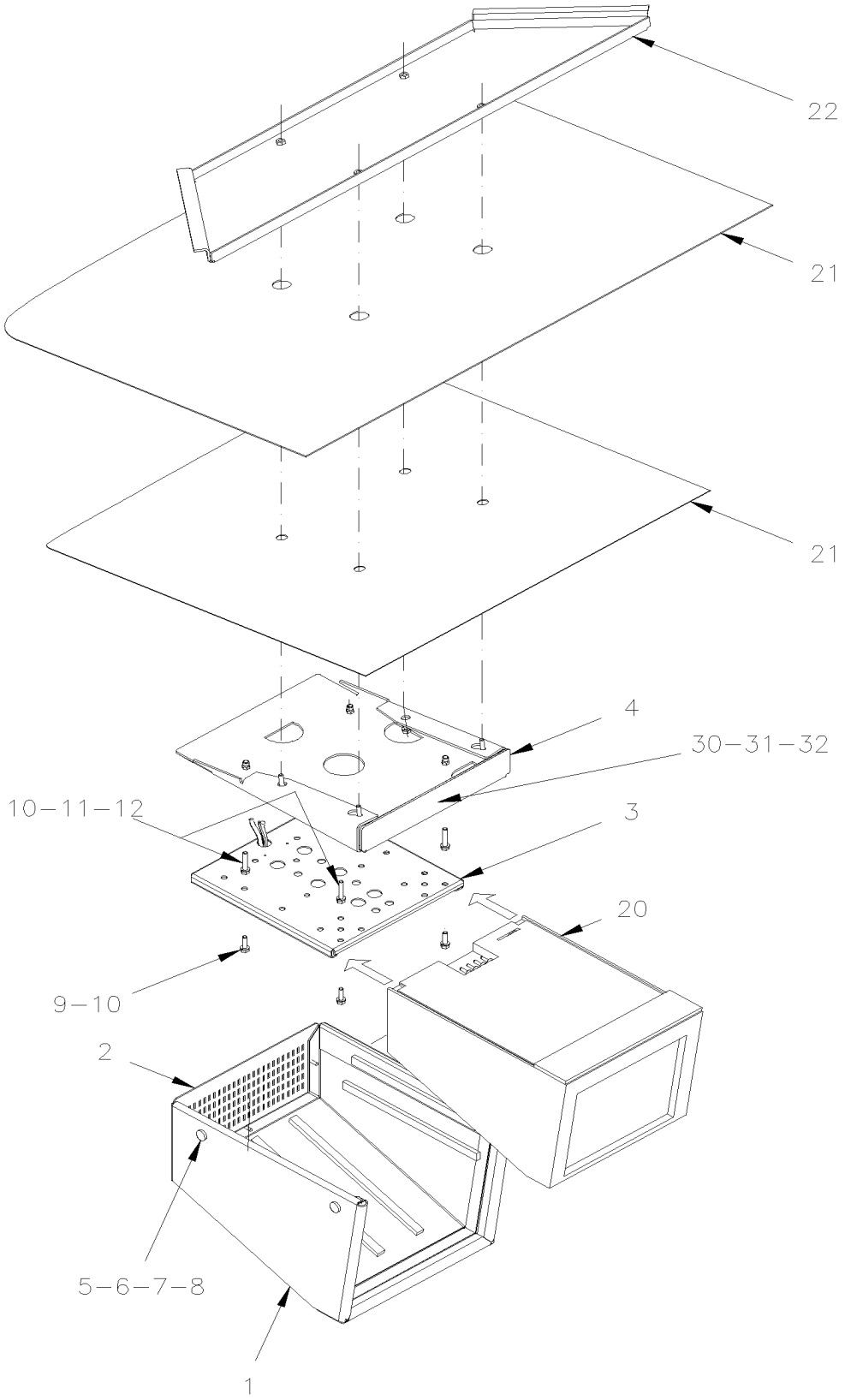

From Y-7046 To 6-8578		Date:07/2024	PAGE:Y2-2317-00

FRONT MONITOR - VIDEO - "R.E.I."

Item#	Part	Description	XLII 45	XLII MTH40	XLII MTH45	XLII MTH45E	NOTES
1	404395P	BOX COVER ASSY / W/TISSUS / S.C.C.	1				
1	404369	. BOX	1				
2	404393	. GRILLE	1				
2	405054	. FOAM SIDE	2				
2	405055	. FOAM BOTTOM SHORT	1				
2	405056	. FOAM BOTTOM LONG	1				
NS	500409	SCREW TP PAN PH #8x1/2 BK	3				
NS	506228	TAPE RUB ADH1 CC POL 1/4" x 1/2" x 37.5' / GREY 2520X	AR				
3	404306	MONITOR SLIDE BRACKET To 4-8270	1				
. NS	900862	. KEY MONITOR LOCK To 4-8270	1				
3	405496	MONITOR SLIDE BRACKET From 4-8271	1				
. NS	900862	. KEY MONITOR LOCK From 4-8271	1				
3	900862	. KEY MONITOR LOCK	1				
4	405031P	SUPPORT ASSY / W/TISSUS / S.C.C.	1				
NS	405174	. DECAL "EMPTYING PLUG"	1				
5	403497	SPACER	4				
6	500640	SCREW TP PAN PH #6x3/4 Z050	4				
7	504399	WASHER RETAINER SNAP CAP #10	4				
8	504400	SNAP CAP #10 FINISHING BLACK	4				
9	502631	SCREW CAP HEX M6-1.0x20 G8.8 Z050	4				
10	502564	WASHER LO SPT 6.1x11.8x1.6 Z050	10				
11	502818	SCREW CAP HEX M6-1.0x35 G8.8 Z050	4				
12	500411	WASHER FL .260x.697x.050 SS	4				
20	900809	MONITOR 2000 24V To 3-8057	1				
20	901070	MONITOR 2000 24V From 3-8058	1				
20	**400316**	**KIT CENTRAL MONITOR LCD**	1				
21	**Y2-1837-00**	**CEILING PANELS & MOULDING - BUS**					
22	**Y2-1895-00**	**FRONT STRUCTURE**					
30	405425	DECAL MOUNTING PLATE / 275MM X 46MM To 5-8605	1				
30	405707	DECAL MOUNTING PLATE / 250MM X 46MM From 5-8606	1				
31	404636	DECAL / "WATCH YOUR STEP" To 5-8605	1				
31	405708	DECAL / "WATCH YOUR STEP" From 5-8606 To 6-8843	1				
31	409155	DECAL / "WATCH YOUR STEP" 35 x 235 From 6-8843	1				
31	404637	DECAL / "ATTENTION À LA MARCHE" / BILINGUAL To 5-8456	1				
31	405689	DECAL / "ATTENTION À LA MARCHE" / BILINGUAL From 5-8457 To 5-8605	1				
31	405709	DECAL / "ATTENTION À LA MARCHE" / BILINGUAL From 5-8606 To 6-8843	1				
31	409156	DECAL / "ATTENTION À LA MARCHE" / BILINGUAL 35 x 235 From 6-8843	1				
31	405648	DECAL / "WATCH YOUR STEP" / "CUINDADO CON EL To 5-8605	1				
31	405710	DECAL / "WATCH YOUR STEP" / "CUINDADO CON EL From 5-8606 To 6-8843	1				
31	409157	DECAL / "WATCH YOUR STEP" / "CUINDADO CON EL 35 x 235 From 6-8843	1				
32	504108	RIVET POP DOME OE 1/8x1/2 AL	2				

From Y-7046 To 6-8578		Date:07/2024	PAGE:400316
KIT CENTRAL MONITOR LCD			

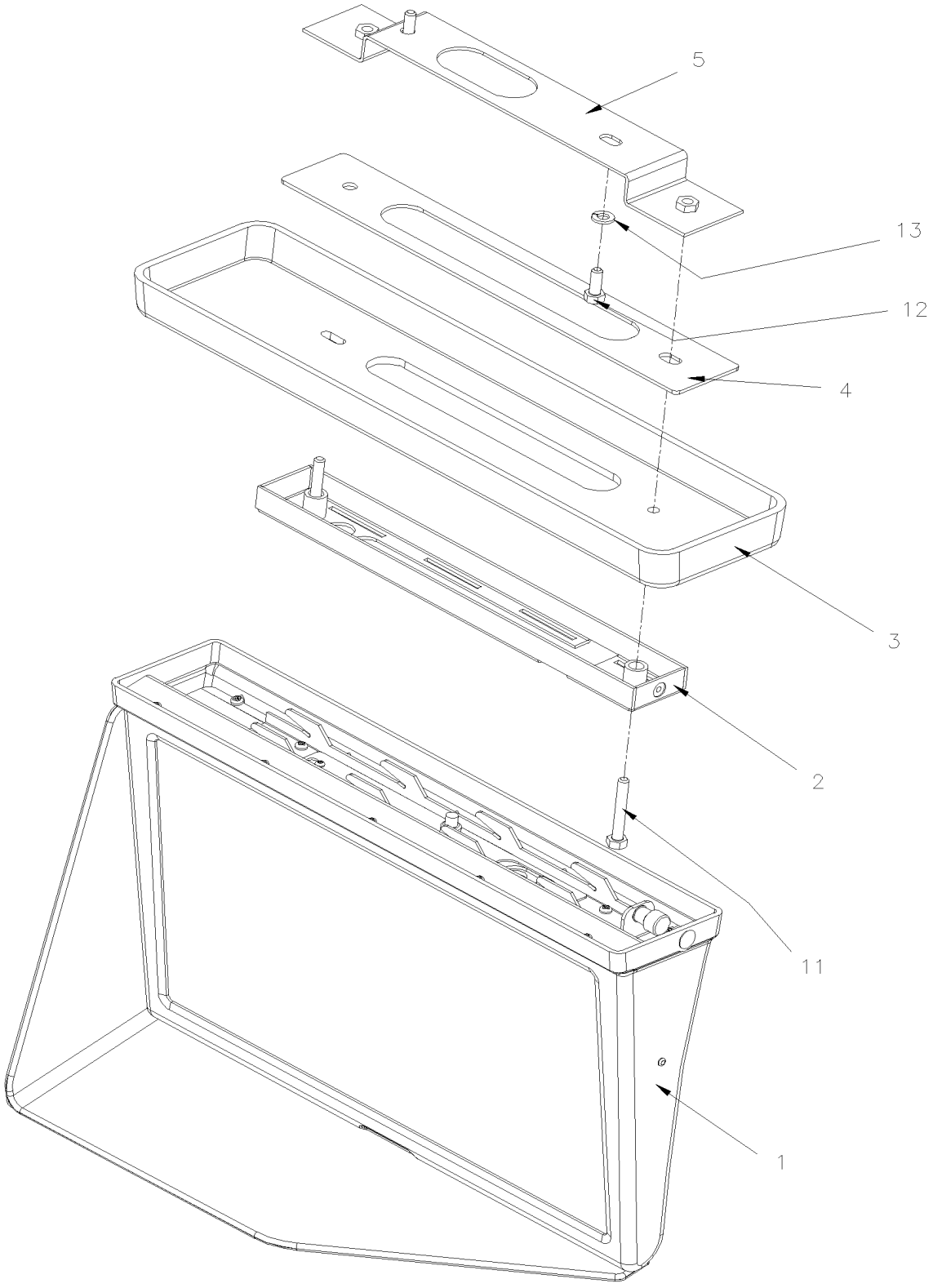

From Y-7046 To 6-8578		Date:07/2024	PAGE:400316

KIT CENTRAL MONITOR LCD

Item#	Part	Description	XLII 45	XLII MTH40	XLII MTH45	XLII MTH45E	NOTES
1	900021	MONITOR 15.6" LCD 24V W/ DEFLECTOR	1	1	1	1	
2	901358	SUPPORT MONITOR 15.4" 16/9 SCREEN	1	1	1	1	
3	400294	TRANSITION MOLDING, CENTRAL MONITOR	1	1	1	1	
4	400309	SPACER, CENTRAL MONITOR	1	1	1	1	
5	400291	SUPPORT ASSY	1	1	1	1	
11	5000310	SCREW CAP HEX M6-1.0x40 BK	2	2	2	2	
12	5001697	SCREW CAP HEX M6-1.0x16 SS BK	2	2	2	2	
13	500477	WASHER LO SPT .262x.489x.062 SS	2	2	2	2	

From 5-8579 To 6-8906		Date:07/2024	PAGE:Y2-2317-01
FRONT MONITOR FLAT SCREEN - VIDEO - "R.E.I."			

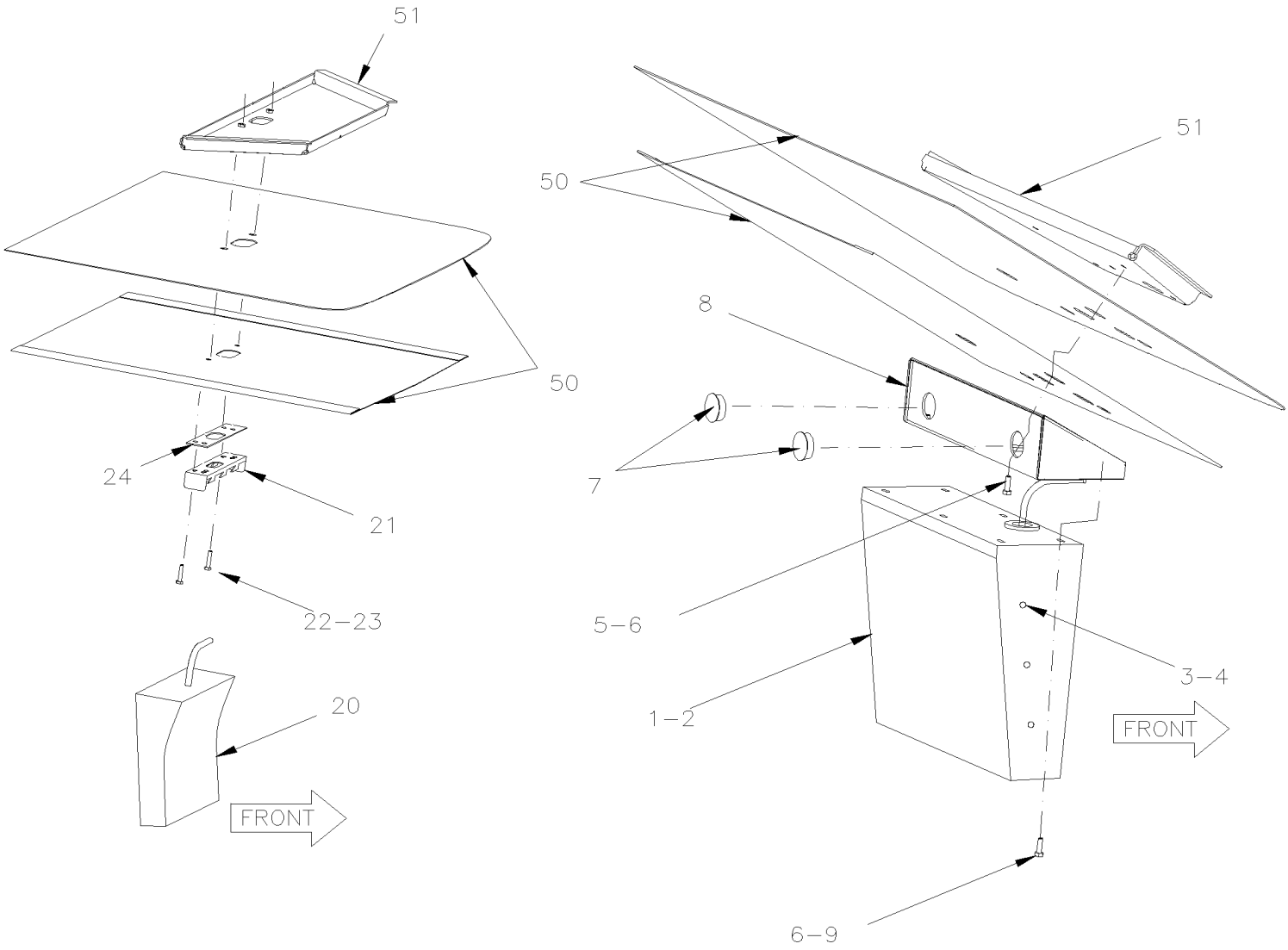

From 5-8579 To 6-8906		Date:07/2024	PAGE:Y2-2317-01

FRONT MONITOR FLAT SCREEN - VIDEO - "R.E.I."

Item#	Part	Description	XLII 45	XLII MTH40	XLII MTH45	XLII MTH45E	NOTES
1	901084	MONITOR 15" LCD	1				
2	901085	SUPPORT CENTRAL MONITOR / W/FLAT SCREEN 15"	1				
2	502843	SCREW CAP HEX M6-1.0x45 G8.8 N500	2				
3	500697	SCREW TP BDG PH M5x8 BK	6				
4	500840	WASHER LO EXT .195x.410x.025 N500	6				
5	502533	SCREW CAP HEX M6-1.0x30 G8.8 Z050	5				
6	502582	WASHER LO SERR 6.1x16.2x0.9 Z050	AR				
7	507295	HOLE PLUG BUTTON / 1.375 O.D. BLACK	2				
8	251224	SUPPORT MONITOR	1				
9	502631	SCREW CAP HEX M6-1.0x20 G8.8 Z050	1				
		MONITOR 10"					
20	901130	MONITOR 10" LCD 24V To 6-8843	1				
. NS	901138	. PLUG CAP / GREY OVER SCREW 12.51MM O.D. To 6-8843	1				
20	903214	MONITOR 10" LCD 24V From 6-8844	1				
. NS	901243	. PLUG CAP / GREY OVER SCREW 9.31MM O.D. From 6-8844	1				
20	406731	KIT, CENTRAL MONITOR REI 10.1" X3 SAV	1				
. NS	901547	. MONITOR, LCD REI 10.1"	1				
. NS	406724	. SUPPORT, MONITOR 10.1" ASSY	1				
NS	409160	DECAL MOUNTING PLATE From 6-8844	1				
21	407590	SUPPORT CENTRAL MONITOR / W/FLAT SCREEN 10" To 6-8843	1				
21	407599	SUPPORT CENTRAL MONITOR / W/FLAT SCREEN 10" From 6-8844	1				
22	502533	SCREW CAP HEX M6-1.0x30 G8.8 Z050 To 6-8843	2				
22	502843	SCREW CAP HEX M6-1.0x45 G8.8 N500 From 6-8844	2				
23	955920	WASHER LO SPT 6.5x11.5x1.6 ZP	2				
24	341117	SHIM To 6-8843	1				
24	341124	SHIM From 6-8844	1				
25	405858	SHIELD SCREEN DEFLECTOR / W/10" SCREEN / PLASTIC GREY	1				
50	**Y2-1837-00**	**CEILING PANELS & MOULDING - BUS**					
51	**Y2-1895-00**	**FRONT STRUCTURE**					

From Y-7046 To 6-8906		Date:07/2024	PAGE:Y2-2317-10
SIDE MONITOR - VIDEO - "R.E.I."			

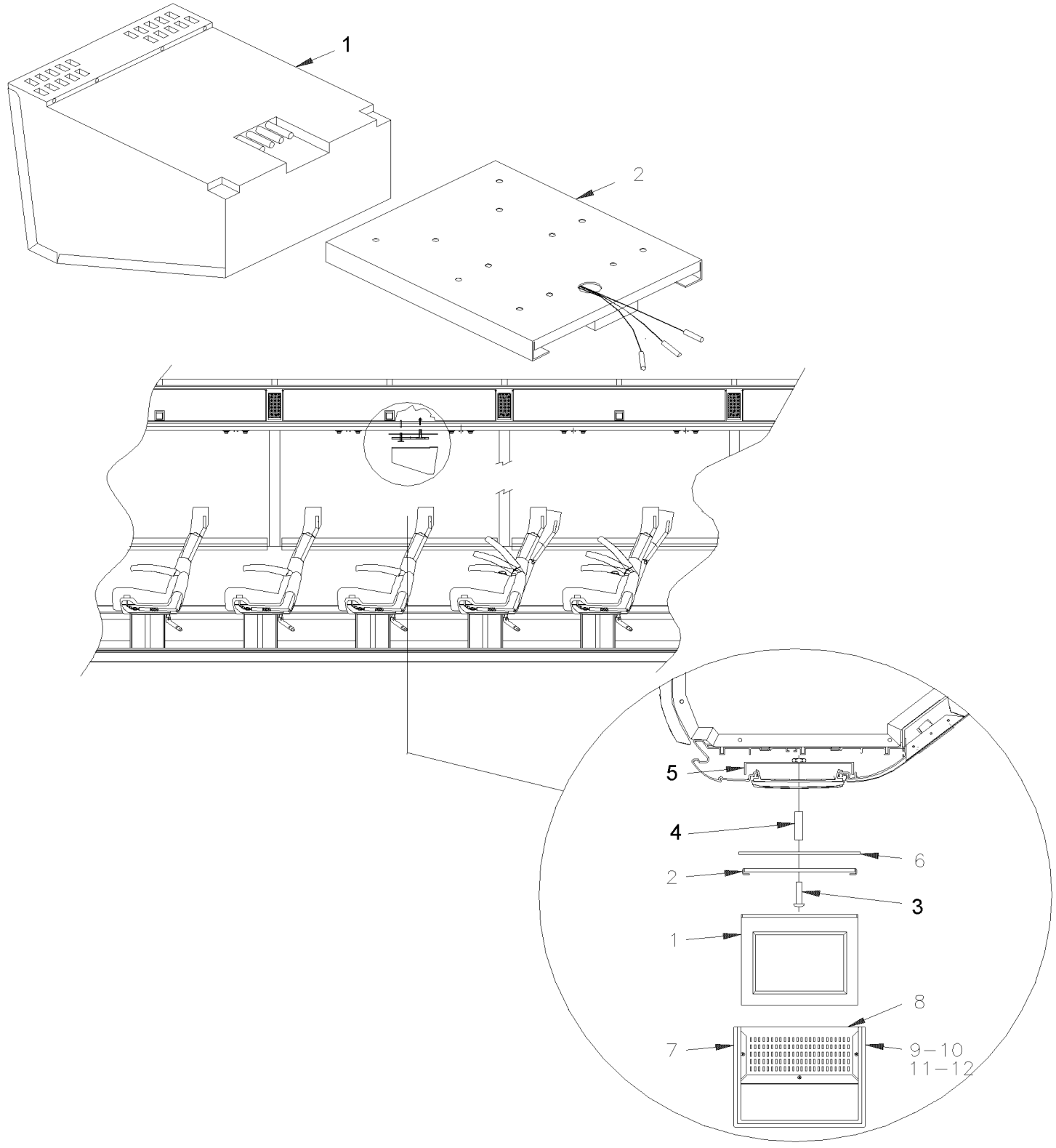

From Y-7046 To 6-8906		Date:07/2024	PAGE:Y2-2317-10

SIDE MONITOR - VIDEO - "R.E.I."

Item#	Part	Description	XLII 45	XLII MTH40	XLII MTH45	XLII MTH45E	NOTES
1	900809	MONITOR 2000 24V To 3-8057	AR				
1	901070	MONITOR 2000 24V From 3-8058	AR				
1	**400321**	**KIT PARCEL RACK MONITOR LCD**	1				
2	404306	MONITOR SLIDE BRACKET To 4-8270	AR				
. NS	900862	. KEY MONITOR LOCK To 4-8270	1				
2	405496	MONITOR SLIDE BRACKET From 4-8271	AR				
. NS	900862	. KEY MONITOR LOCK From 4-8271	1				
2	900862	. KEY MONITOR LOCK	1				
3	5001485	SCREW CAP HEX M10-1.5x60 G8.8 Z050	2				
4	404610	SPACER 5/8" O.D. TUBE X 35MM	1				
5	404611	. SUPPORT	1				
6	404388P	COVER ASSY	1				
7	404370P	BOX COVER ASSY / W/TISSUS / S.C.C.	1				
7	404369	. BOX	1				
8	404371	. GRILLE	1				
NS	500409	. SCREW TP PAN PH #8x1/2 BK	3				
9	500640	SCREW TP PAN PH #6x3/4 Z050	4				
10	504399	WASHER RETAINER SNAP CAP #10	4				
11	504400	SNAP CAP #10 FINISHING BLACK	4				
12	403497	SPACER	4				A
20	**Y2-2317-20**	**VIDEO VHS PLAYER - INSTALLATION "R.E.I."**					
		A) SUPPORT & CEILING					

From Y-7046 To 6-8906		Date:07/2024	PAGE:400321
KIT PARCEL RACK MONITOR LCD			

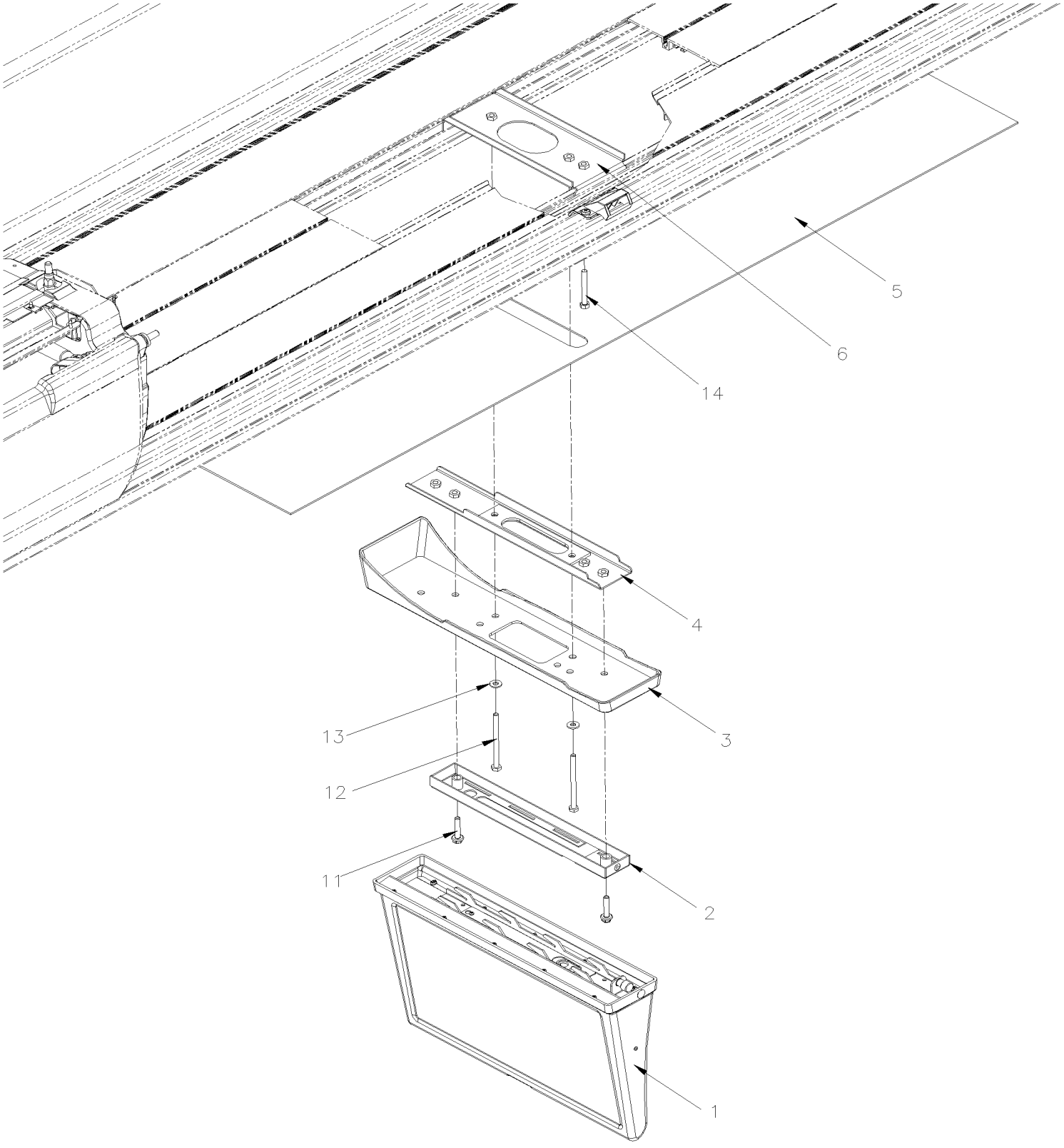

From Y-7046 To 6-8906		Date:07/2024	PAGE:400321

KIT PARCEL RACK MONITOR LCD

Item#	Part	Description	XLII 45	XLII MTH40	XLII MTH45	XLII MTH45E	NOTES
1	900016	MONITOR 15.6" LCD 24V	1	1	1	1	
2	901358	SUPPORT MONITOR 15.4" 16/9 SCREEN	1	1	1	1	
3	900013	FINISHING CAP W/15.6" MONITOR	1	1	1	1	
4	406332	SUPPORT MONITOR	1	1	1	1	
5	310215	PANEL 1200MM / 500MM POSITION SCREEN	1	1	1	1	
6	402823	SUPPORT MONITOR	1	1	1	1	
11	5001815	SCREW CAP HEXF M6-1.0x30 G 8.8 N500	2	2	2	2	
11	680038	THREAD LOCKER LOCTITE #243 / BLUE / 50ml	AR	AR	AR	AR	
12	5001826	SCREW CAP HEX M6-1.0x80 FT Z050	2	2	2	2	
13	500877	WASHER FL .250x.562x.065 N500	2	2	2	2	
14	502656	SCREW CAP HEX M6-1.0x50 SS	1	1	1	1	

From Y-7046 To 6-8906		Date:07/2024	PAGE:Y2-2317-11
SIDE MONITOR FLAT SCREEN - VIDEO -"R.E.I."			

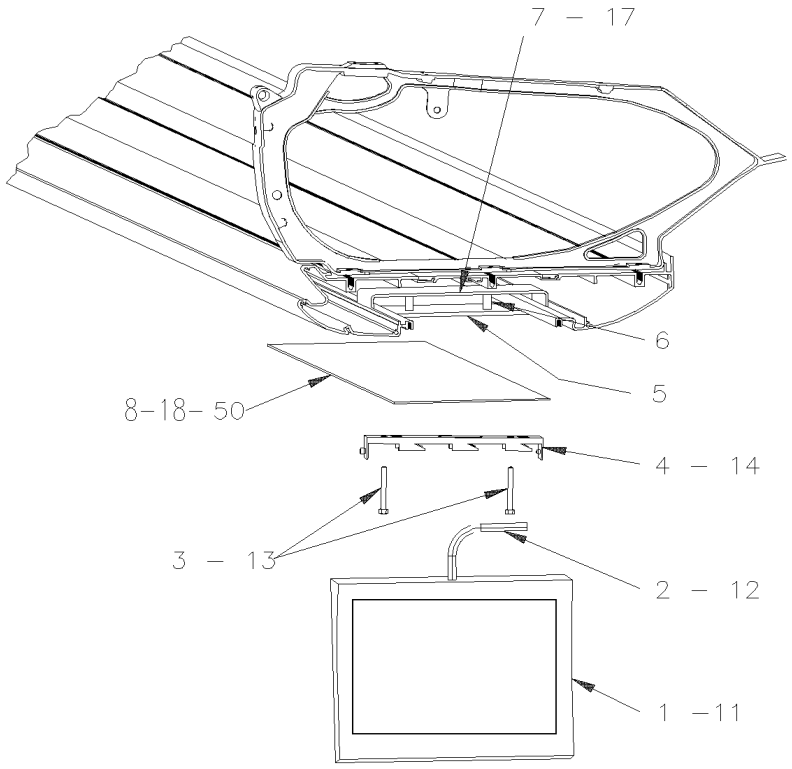

From Y-7046 To 6-8906		Date:07/2024	PAGE:Y2-2317-11

SIDE MONITOR FLAT SCREEN - VIDEO -"R.E.I."

Item#	Part	Description	XLII 45	XLII MTH40	XLII MTH45	XLII MTH45E	NOTES
1	901130	MONITOR 10" LCD 24V To 6-8843	AR				
. NS	901138	. PLUG CAP / GREY OVER SCREW 12.51MM O.D. To 6-8843	1				
1	903214	MONITOR 10" LCD 24V From 6-8844	1				
. NS	901243	. PLUG CAP / GREY OVER SCREW 9.31MM O.D. From 6-8844	1				
1	**406729**	**KIT, PARCEL RACK MONITOR REI 10.1" SAV**	1				
2	561681	CONVOLUTED TUBING / SLIT / BLACK & GRAY / .350"	1				
3	502541	SCREW CAP HEX M6-1.0x65 G8.8 Z050	2				
4	901131	SUPPORT MONITOR / W/FLAT SCREEN 10" To 6-8843	AR				
4	903213	SUPPORT CENTRAL MONITOR / W/FLAT SCREEN 10" From 6-8844	1				
5	407564	SHIM / BLACK PLASTIC / 50MM X 207MM	AR				
6	407561	SPACER 5/8" OD TUBE X 24MM / W/FL 6MM	AR				
7	407562	SUPPORT MONITOR R.H. To 6-8843	AR				
7	409151	SUPPORT MONITOR R.H. From 6-8844	1				
7	407563	SUPPORT MONITOR L.H. To 6-8843	AR				
7	409150	SUPPORT MONITOR L.H. From 6-8844	1				
8	310653P	PANEL 655MM / 382MM POSITION SCREEN / L.H. W/10" LCD SCREEN	1				
8	310654P	PANEL 655MM / 382MM POSITION SCREEN / R.H. W/ LCD SCREEN	1				
11	901086	MONITOR 12" LCD / FOLDING	AR				
12	405461	CABLE ASSY / 24V POWER / W/12" MONITOR / 10' / 511824	AR				
12	405462	CABLE ASSY / 24V POWER / W/12" MONITOR / 511693 / 15'	AR				
12	405463	CABLE ASSY / 24V POWER / W/12" MONITOR / 35' / 511825	AR				
NS	500195	SCREW CAP HEX 3/8-16x2 1/2 G5 Z050	AR				
NS	502510	WASHER FL .375x.875x.083	AR				
13	500478	WASHER LO SPT .380x.683x.094 Z050	AR				
14	901089	SUPPORT MONITOR / W/FLAT SCREEN 12" FOLDING	AR				
17	901087	SUPPORT SIDE MONITOR TRANSITION L.H.	AR				
17	901088	SUPPORT SIDE MONITOR TRANSITION R.H.	AR				
18	312761P	PANEL 315MM	1				
18	312840P	PANEL 753MM	1				
18	Call order desk	PANEL 243MM	1				P
18	313328P	PANEL 388MM	1				
50	**Y2-1836-00**	**PARCEL RACK**					
		P) CALL ORDER DESK FOR SPECIFIC APPLICATION (V.I.N.)					

From Y-7046 To 6-8906		Date:07/2024	PAGE:406729
KIT, PARCEL RACK MONITOR REI 10.1" SAV			

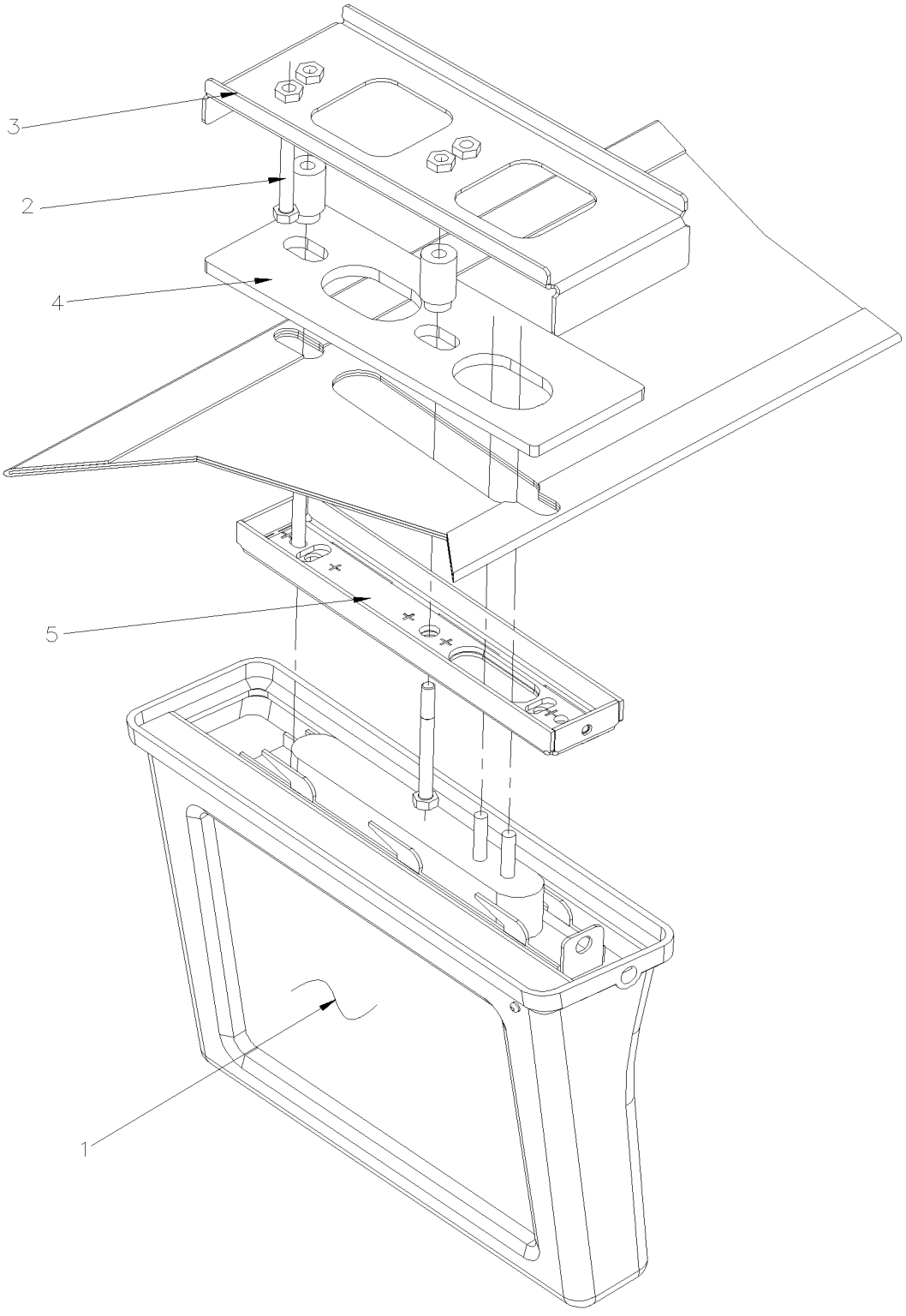

From Y-7046 To 6-8906		Date:07/2024	PAGE:406729

KIT, PARCEL RACK MONITOR REI 10.1" SAV

Item#	Part	Description	XLII 45	XLII MTH40	XLII MTH45	XLII MTH45E	NOTES
1	901547	MONITOR, LCD REI 10.1"	1	1	1	1	
2	502656	SCREW CAP HEX M6-1.0x50 SS	2	2	2	2	
3	406722	SUPPORT, PARCEL RACK MONITOR 10.1"	1	1	1	1	
4	406723	SPACER, PARCEL RACK MONITOR 10.1"	1	1	1	1	
5	406724	SUPPORT, MONITOR 10.1" ASSY	1	1	1	1	

From 5-8678 To 6-8906		Date:07/2024	PAGE:Y2-2317-12
BACK SEAT MONITOR SCREEN - VIDEO -"R.E.I."			

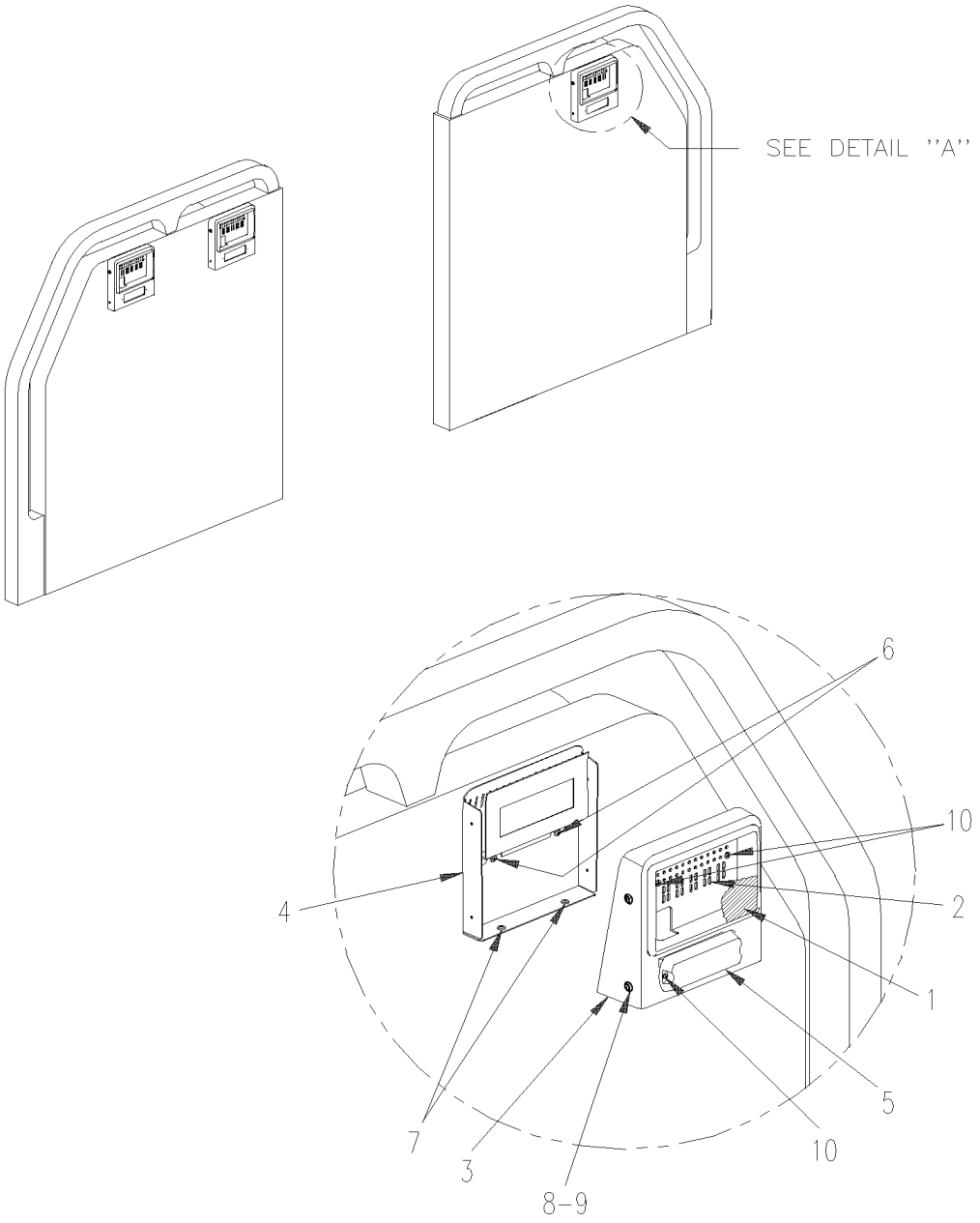

From 5-8678 To 6-8906		Date:07/2024	PAGE:Y2-2317-12

BACK SEAT MONITOR SCREEN - VIDEO -"R.E.I."

Item#	Part	Description	XLII 45	XLII MTH40	XLII MTH45	XLII MTH45E	NOTES
		FLAT SCREEN 5" HEADREST AND FRONT MODESTY					
1	901160	MONITOR 5" LCD 24V / HEADREST	AR				
2	901159	BOX LCD HEADREST	AR				
NS	901158	CONTROL BOX HEADREST	1				
3	405736	COVER MONITOR 5" LCD / MODESTY PANEL / FIXEX ON MODESTY PANEL	A				
4	405740	SUPPORT ASSY MONITOR 5" LCD / MODESTY PANEL / FIXEX ON MODESTY PANEL	1				
5	901006	SELECTOR HEAD SET MODULE	1				
6	500617	SCREW TP PAN PH #8x1 Z050	2				
7	500638	SCREW TP PAN PH #8x1/2 Z050	2				
8	500504	SCREW TC OV PH #6-32x1/2 BK	4				
9	500345	WASHER FN CKF .187x.500x.090 BR BK	4				
10	5001479	SCREW TP BDG PH #6x3/8 SS EMN	4				
11	500604	SCREW TC TR PH #10-24x1/2	4				
		ALLS FOLLOWING ITEMS ARE RELATED WITH "FIRTS CLASS TOURS"					
		WITH "V.I.N." 5-8678 / 5-8687 & 5-8692					
NS	901151	ANTENNA ROOF / XM RADIO	3				
NS	901149	RECEIVER / XM "SATELLITE"	3				
NS	901150	CABLE / XM TUNER & RADIO	3				
NS	901148	RADIO "PANASONIC" CQ-C3301U / AM/FM/CD & XM / 700972	3				
NS	901153	BOX MODULE ENTERTAINER / 3XM RADIO	1				
NS	901178	CABLE POWER 12' ENTERTAINER MODULE BOX	1				
NS	901111	KIT, DSS SATELLITE TV RECEIVER	1				
NS	901147	RECEIVER / "SATELLITE" LOW PROFILE	1				
NS	405754	SUPPORT ANTENNA "DSS"	1				
NS	901174	CABLE POWER 10'	2				
NS	901175	CABLE POWER 60'	3				
NS	901158	CONTROL BOX HEADREST	3				
NS	901161	CABLE INTERFACE 6' / INTERFACE BOX & LCD S	3				
NS	901162	CABLE INTERFACE EXTENTION / CONT / CCD	3				
NS	901177	CABLE POWER INTERFACE 12' / SEATS	10				
NS	901155	CABLE AUDIO RJ45 14'	3				
NS	901168	CABLE COAXIAL 3' RG6	3				
NS	901167	CABLE COAXIAL 9' RG6	20				
NS	901169	CABLE COAXIAL 35' RG6	2				
NS	901154	SELECTOR 4 CHANNELS	1				
NS	901156	CABLE AUDIO 8 CIRCUITS	1				
NS	901157	CABLE COAXIAL 3' BNC	5				
NS	901173	CABLE INTERFACE AMPLI / 8 CHANELS MODULATOR	1				

From 5-8678 To 6-8906		Date:07/2024	PAGE:Y2-2317-12

BACK SEAT MONITOR SCREEN - VIDEO -"R.E.I."

Item#	Part	Description	XLII 45	XLII MTH40	XLII MTH45	XLII MTH45E	NOTES
NS	901163	MODULATOR VIDEO 3 CHANNELS	3				
NS	901164	DIVIDER 3 VIDEOS	2				
NS	901165	AMPLI VIDEO	3				
NS	901166	SPLITER VIDEO 2 WAY	13				
NS	901172	CONNECTOR ADAPTOR / RCA F/GP / 110716	6				
NS	901152	CD CHARGER MODEL CX-DP880U	2				
NS	404225	NOISE FILTER / P/A, VIDEO & HOOKUP INDIVIDU / 450030	7				
NS	404288	CABLE ASSY / "Y" 9" CONTROL HEAD & ENTERTAINMENT MODULE	1				
NS	405753	SUPPORT DVD / USE WITH 3 DVD	1				
NS	901116	DVD REI / MP3	3				
. NS	901264	. REMOTE CONTROL / DVD REI	1				
NS	409125	MOUNTING PLATE	2				
NS	901082	CABLE RCA / 1M/1M / 6'	7				
NS	901102	8 CHANNEL AMPLIFIER MODULE	1				
NS	901106	AUDIO FILTER	4				
NS	901135	CABLE RCA / 3M/3M / 3'	7				
NS	901117	VIDEO DISTRIBUTION AMPLI W/BNC	1				
. NS	901119	. CABLE POWER DVA/VIDEO	1				
87	901403	VIDEO DISTRIBUTION AMPLI W/BNC	1				S
NS	562207	CONNECTOR / BNC / FEMALE / RCA MALE / AMP 12343	5				
NS	901107	CABLE ADAPTOR RCA TO MOLEX / 4"	3				
NS	901106	AUDIO FILTER	6				
NS	900881	HEAD SET EARPHONE	AR				
. NS	900882	. FOAM CUSHION PAD / (SET OF 2) / FOR 900881	1				
NS	D060993	DIAGRAM PAGE 28.1 SP4 & SP5 WIRING INSTALL	1				
NS	D.060993	DIAGRAM PAGE 28.3 SP2 WIRING INSTALL	1				
NS	D..060993	DIAGRAM PAGE 28.6 SP2 WIRING INSTALL	1				
		S) FOR SERVICE					

From Y-7046 To 6-8906		Date:07/2024	PAGE:Y2-2317-20
VIDEO VHS PLAYER - INSTALLATION "R.E.I."			

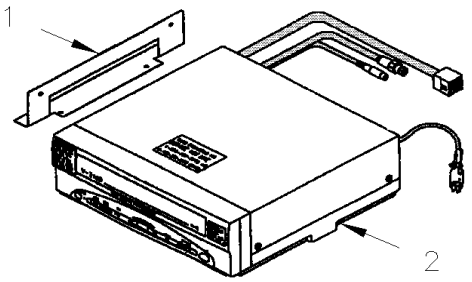

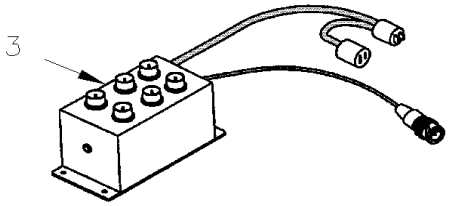

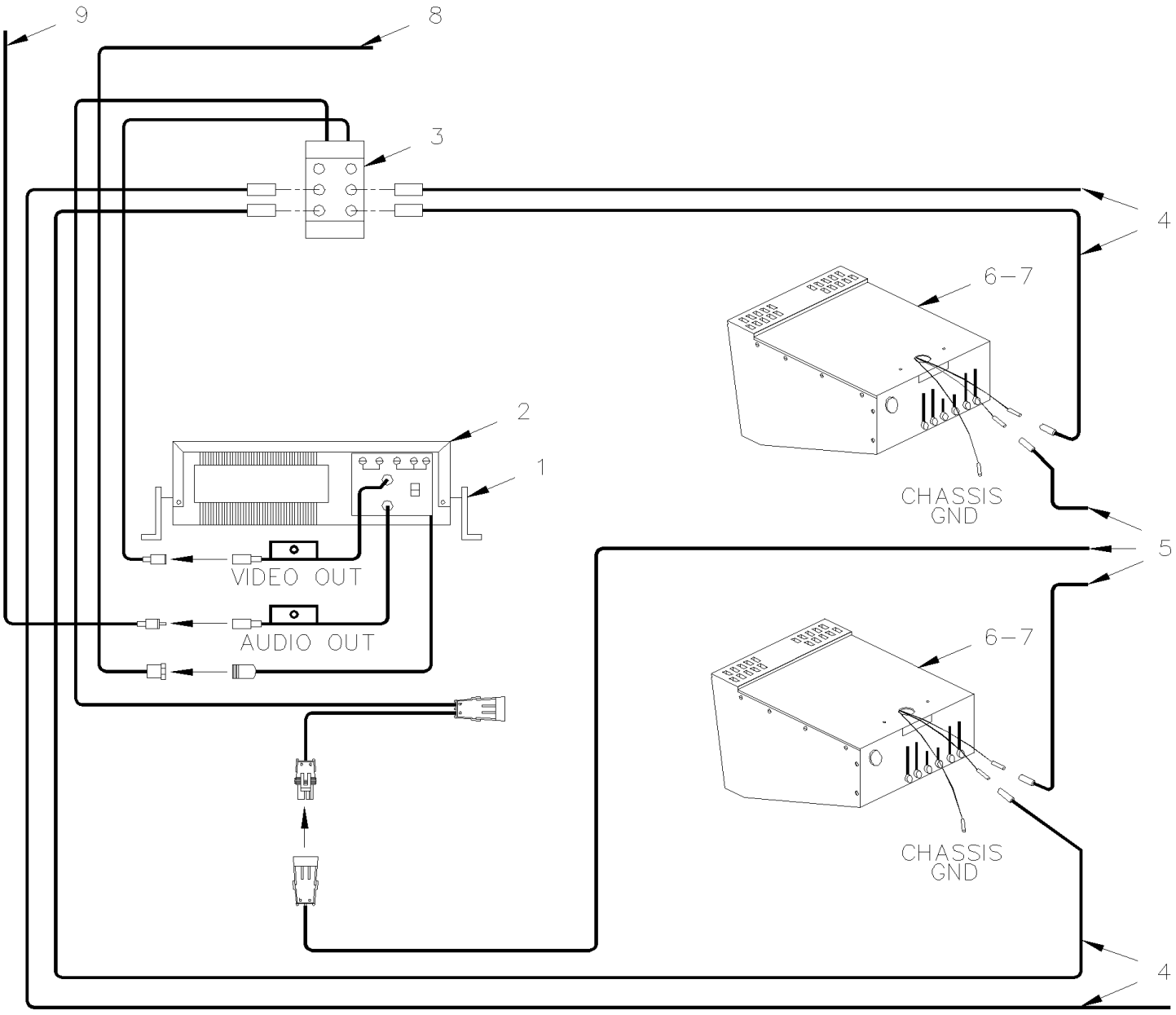

From Y-7046 To 6-8906		Date:07/2024	PAGE:Y2-2317-20
VIDEO VHS PLAYER - INSTALLATION "R.E.I."			

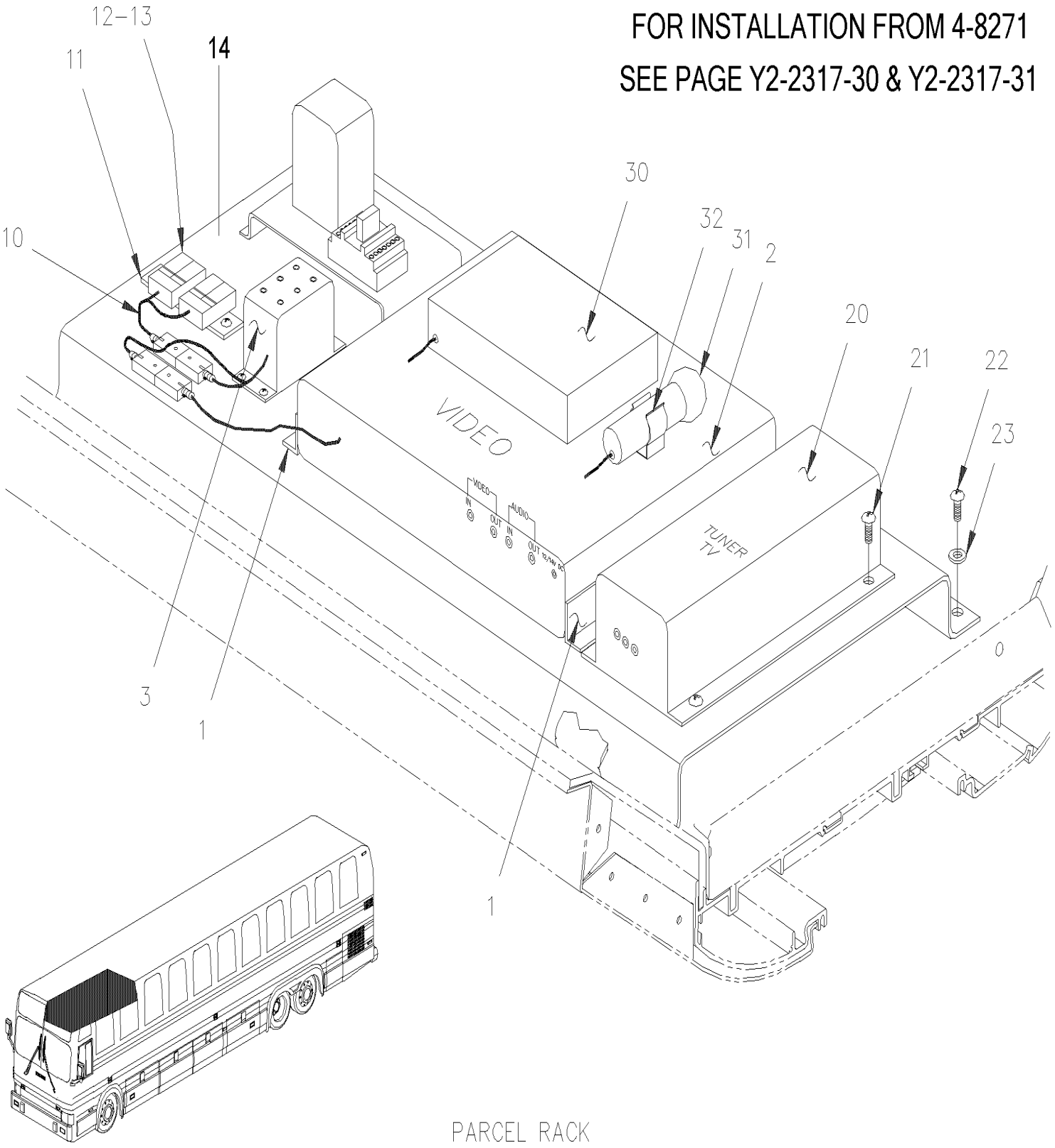

From Y-7046 To 6-8906		Date:07/2024	PAGE:Y2-2317-20

VIDEO VHS PLAYER - INSTALLATION "R.E.I."

Item#	Part	Description	XLII 45	XLII MTH40	XLII MTH45	XLII MTH45E	NOTES
1	900823	VCP R.H. ADAPTOR BRACKET To 1-7436	1				
1	900824	VCP L.H. ADAPTOR BRACKET To 1-7436	1				
1	901028	VCP R.H. ADAPTOR BRACKET From 1-7437 To 4-8270	1				
1	901029	VCP L.H. ADAPTOR BRACKET From 1-7437 To 4-8270	1				
1	405500	VCP R.H. ADAPTOR BRACKET From 4-8271	1				
1	405501	VCP L.H. ADAPTOR BRACKET From 4-8271	1				
2	900806	VIDEO V-2100 VCP, SYS 2000 24V To 1-7436	1				
2	901030	VIDEO V-3000 VCP, SYS 2000 24V From 1-7437	1				
. NS	901065	. REMOTE CONTROL / VDO REI V-3000 From 1-7437	1				
2	7770197	KIT, VHS TO DVD CONVERSION	1				
. NS	901339	. DVD PLAYER 12V	1				
. . NS	901377	. . REMOTE CONTROL / DVD R.E.I.	1				
. NS	407639	. SUPPORT, DVD	1				
. NS	901347	. CABLE ASSY / W/2 BNC FEMALE/ FEMALE 1"	1				
. NS	901564	. ADAPTOR, RCA MALE TO BNC FEMALE	1				
. NS	563071	. CONNECTOR / MINI FIT JR / SH 4C / MOLEX 39-01-3042	1				
. NS	562593	. WIRE CABLE 18 / YELLOW / TXL	AR				
. NS	562587	. WIRE CABLE 18 / BLACK / TXL	AR				
. NS	562463	. SOCKET TERMINAL / 24-18 / MOLEX 39-00-0039	2				
. NS	563622	. BUTT SPLICE / 22-18 / RED / W/THERMORETRAC / PANDUIT BSH18-Q	2				
. NS	5001017	. SCREW TC CAP HEXW #10-24x1/2 Z050	4				
. NS	502853	. WASHER LO SPT 6.1x11.8x1.6 N500	1				
. NS	IS-16901A	. SEE INSTRUCTION SHEET	1				
NS	900884	SWITCH VIDEO / USE WITH 2 VIDEO	1				
NS	404380	CABLE ASSY RCA / M/M / USE WITH 2 VIDEOS / 510300	1				
3	900807	VIDEO DISTRIBUTION AMPLI W/BNC To 2-7744	1				
3	901055	VIDEO DISTRIBUTION AMPLI W/BNC From 2-7745 To 5-8437	1				
3	901117	VIDEO DISTRIBUTION AMPLI W/BNC From 5-8438	1				
. NS	901119	. CABLE POWER DVA/VIDEO From 5-8438	1				
3	901403	VIDEO DISTRIBUTION AMPLI W/BNC	1				S
4	404232	CABLE ASSY COAX / RG-59 / 10' / 510443	AR				
4	404233	CABLE ASSY COAX / RG-59 / 15' / 511062	AR				
4	404234	CABLE ASSY COAX / RG-59 / 20' / 510407	AR				
4	404235	CABLE ASSY COAX / RG-59 / 24' / 510414	AR				
4	404236	CABLE ASSY COAX / RG-59 / 33' / 510928	AR				
4	404237	CABLE ASSY COAX / RG-59 / 44' / 510929	AR				
5	404244	CABLE ASSY / 24V POWER / 10' To 4-8270	AR				RC
5	405487	CABLE ASSY / 24V POWER / 10' From 4-8271	AR				R
5	404245	CABLE ASSY / 24V POWER / 15' To 4-8270	AR				RC
5	405488	CABLE ASSY / 24V POWER / 15' From 4-8271	AR				R
5	404246	CABLE ASSY / 24V POWER / 20' To 4-8270	AR				RC
5	405489	CABLE ASSY / 24V POWER / 20' From 4-8271	AR				R

From Y-7046 To 6-8906		Date:07/2024	PAGE:Y2-2317-20

VIDEO VHS PLAYER - INSTALLATION "R.E.I."

Item#	Part	Description	XLII 45	XLII MTH40	XLII MTH45	XLII MTH45E	NOTES
5	404247	CABLE ASSY / 24V POWER / 25' To 4-8270	AR				RC
5	405490	CABLE ASSY / 24V POWER / 25' From 4-8271	AR				R
5	404248	CABLE ASSY / 24V POWER / 30' To 4-8270	AR				RC
5	405491	CABLE ASSY / 24V POWER / 30' From 4-8271	AR				R
5	404249	CABLE ASSY / 24V POWER / 35' To 4-8270	AR				RC
5	405492	CABLE ASSY / 24V POWER / 35' From 4-8271	AR				R
5	404250	CABLE ASSY / 24V POWER / 40' To 4-8270	AR				RC
5	405493	CABLE ASSY / 24V POWER / 40' From 4-8271	AR				R
5	405379	CABLE ASSY / 24V POWER / 60' To 4-8270	AR				RC
5	405494	CABLE ASSY / 24V POWER / 60' From 4-8271	AR				R
6	**Y2-2317-00**	**FRONT MONITOR - VIDEO - "R.E.I."**					
7	**Y2-2317-10**	**SIDE MONITOR - VIDEO - "R.E.I."**					
8	404283	CABLE ASSY / FILTER VCP & CONTROL HEAD / 20'	1				
9	900783	CABLE RCA / 2M/2M / 10'	1				
10	404255	CABLE ASSY / 24V POWER / 13"	1				
11	380904	RAIL SUPPORT / 80MM	1				
12	561726	BLOCK JUNCTION	4				
12	381813	BUS BAR / W/2 HOLES 25MM	1				
13	561728	END CLOSING	1				
14	404588	MOUNTING PLATE To 4-8270	1				
14	405482	MOUNTING PLATE From 4-8271 To 5-8592	1				
14	409125	MOUNTING PLATE From 5-8593	1				
NS	404589	PROTECTOR VIDEO BOX	1				
14	**Y2-2317-30**	**VIDEO & AUDIO SYSTEM - INSTALLATION**	1	1	1	1	
20	900814	TUNER TV 24V To 2-7744	1				
20	901054	TUNER TV 24V From 2-7745	1				
NS	405186	INTERFACE CABLE ASSY	1				B
21	500654	SCREW TC BDG PH #8-32x1/2 Z050	4				
22	500841	SCREW TP PAN PH #14x3/4 Z050	6				
23	500441	WASHER FL .312x.734x.065 Z050	6				
30	900952	RECEIVER WIRELESS MICROPHONE / 16-CHANNEL To 5-8412	1				A
. NS	901300	. ANTENNA RIGID / REAR OF RECEIVER To 5-8412	1				A
30	901201	RECEIVER WIRELESS MICROPHONE / 16 CHANNEL From 5-8413	1				
31	900954	MICROPHONE, WIRELESS / 16 CHANNEL	1				A
. NS	685199	. BATTERY 1.5V / TYPE "AA" / RECHARGEABLE	AR				A
32	900953	STATION WIRELESS BATTERY CHARGING 16 CHANNEL	1				
		A) 170,3 MHZ TO 174,8 MHZ					
		B) USE WITH #901054 UP TO 2-7744					
		R) CABLE W/R.E.I. MONITOR USE W/CON 1 # 563071 & 3 TERM # 562483					

From Y-7046 To 6-8906		Date:07/2024	PAGE:Y2-2317-20

VIDEO VHS PLAYER - INSTALLATION "R.E.I."

Item#	Part	Description	XLII 45	XLII MTH40	XLII MTH45	XLII MTH45E	NOTES
		RC) CABLE W/R.E.I. MONITOR USE W/CON 1 # 562554					
		S) FOR SERVICE					

From 4-8271 To 5-8592		Date:07/2024	PAGE:Y2-2317-30

VIDEO & AUDIO SYSTEM - INSTALLATION

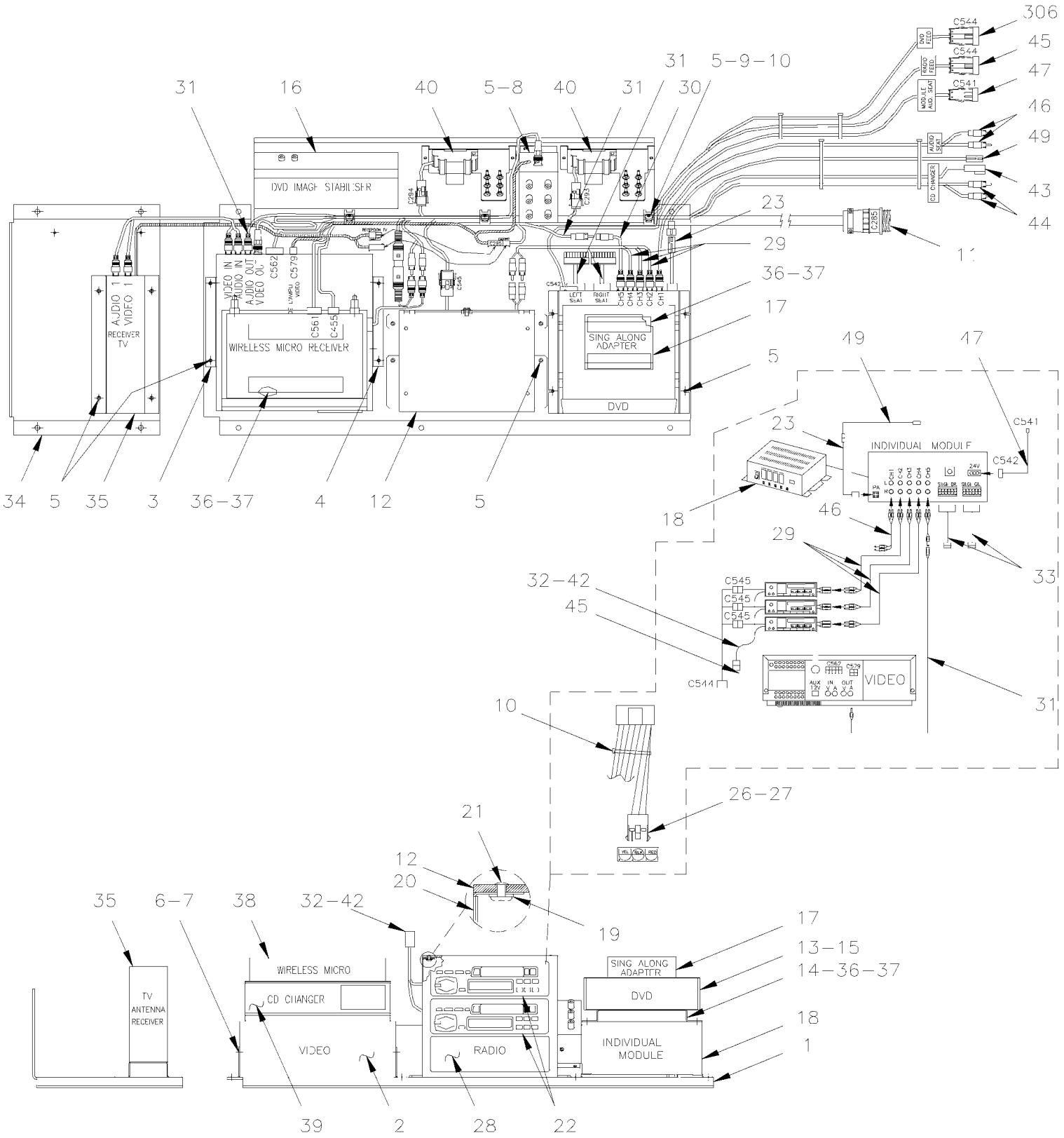

From 4-8271 To 5-8592		Date:07/2024	PAGE:Y2-2317-30
VIDEO & AUDIO SYSTEM - INSTALLATION			

COMPONENTS POSITION
W/O INDIVIDUAL LISTENING

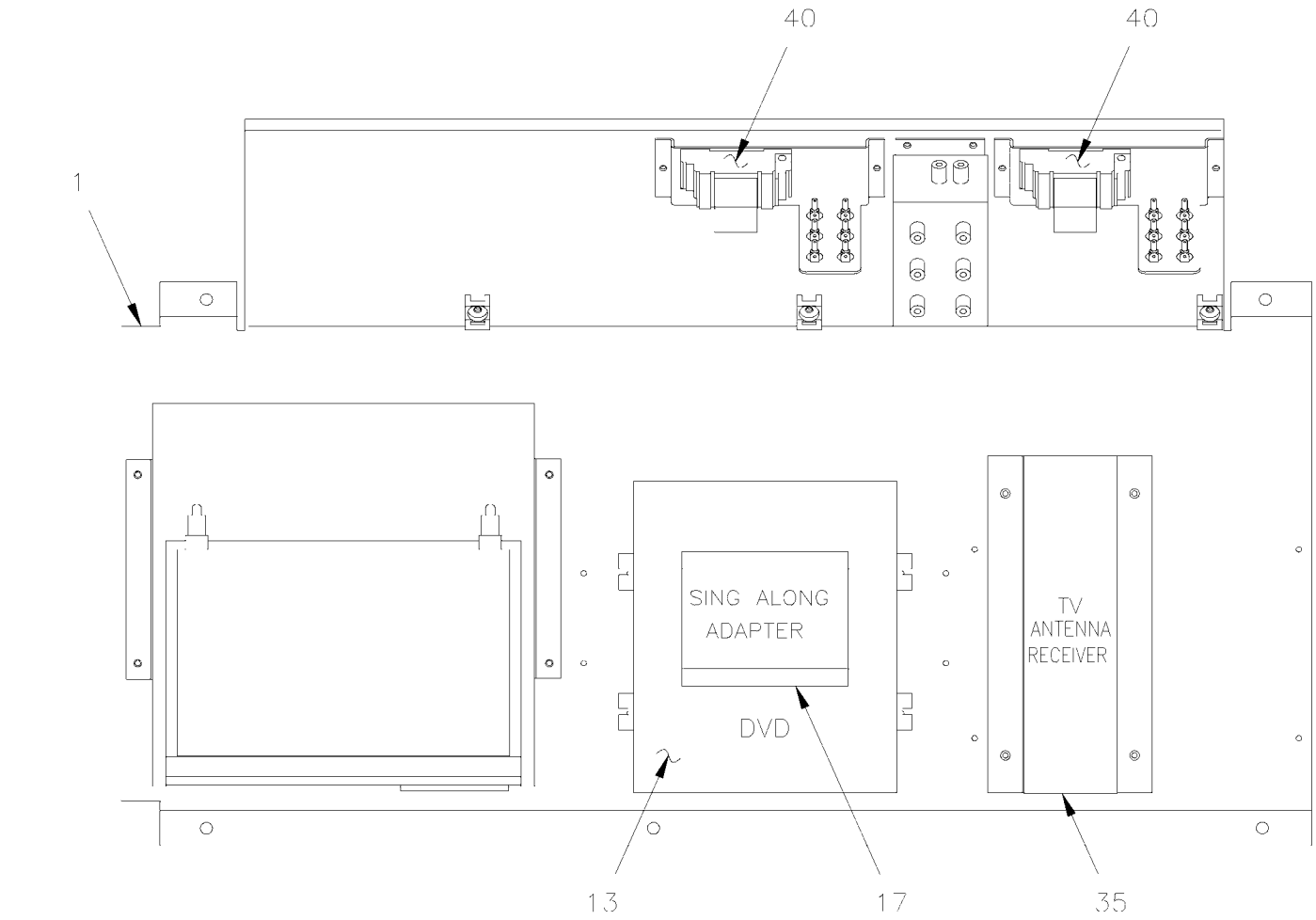

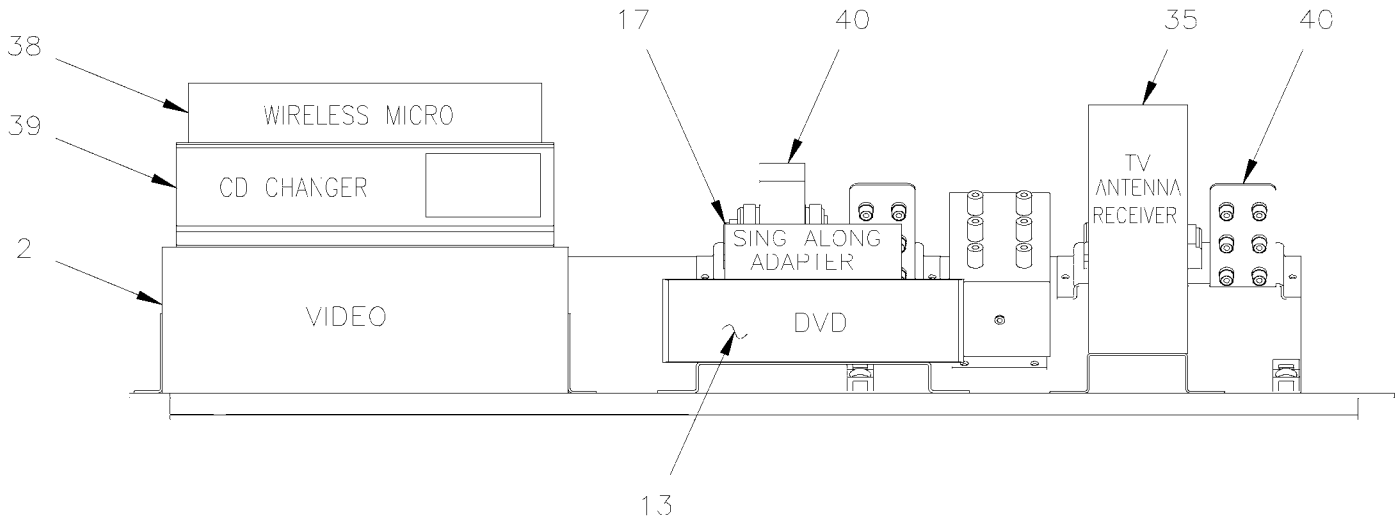

From 4-8271 To 5-8592		Date:07/2024	PAGE:Y2-2317-30

VIDEO & AUDIO SYSTEM - INSTALLATION

VCP, DVD SING ALONG WITH OR WITHOUT CAMERA

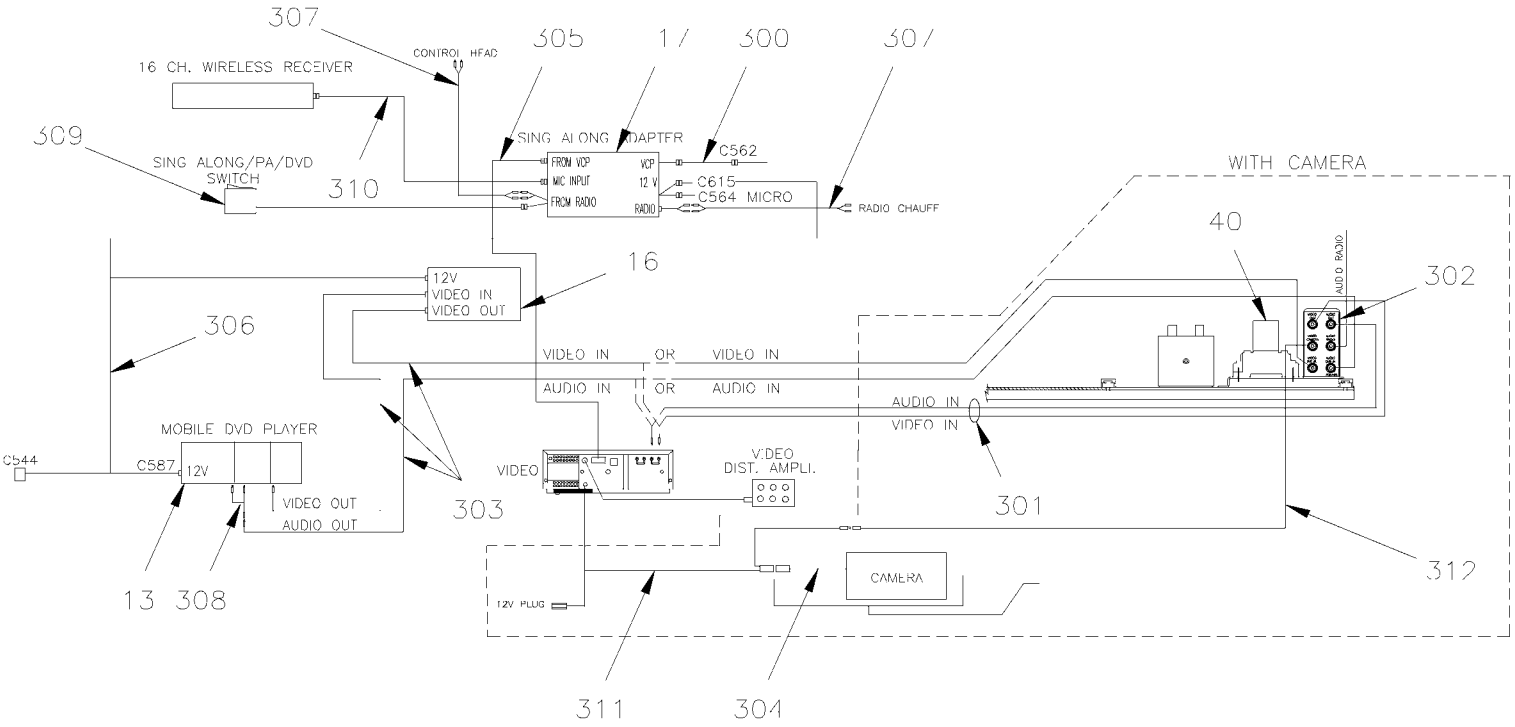

VCP, DVD WITH OR WITHOUT CAMERA

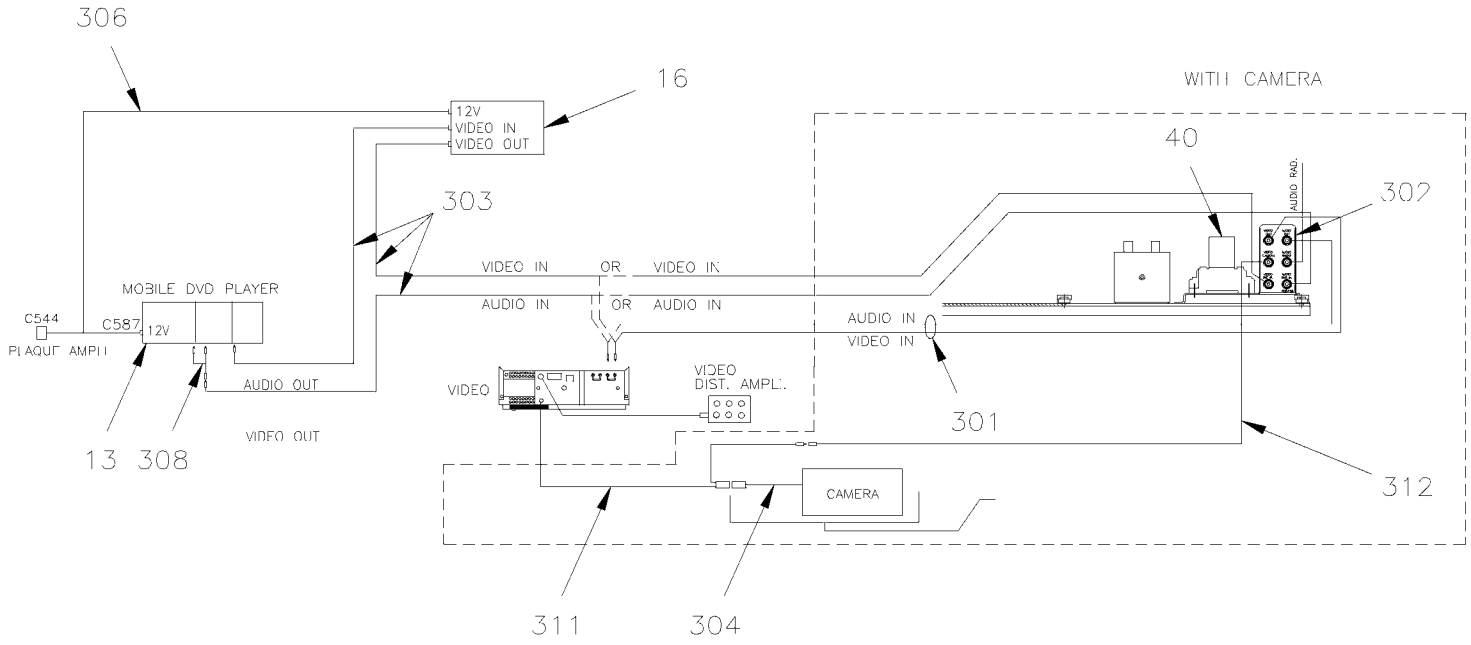

From 4-8271 To 5-8592		Date:07/2024	PAGE:Y2-2317-30

VIDEO & AUDIO SYSTEM - INSTALLATION

VCP, DVD SING ALONG, CAMERA AND TV RECPTION

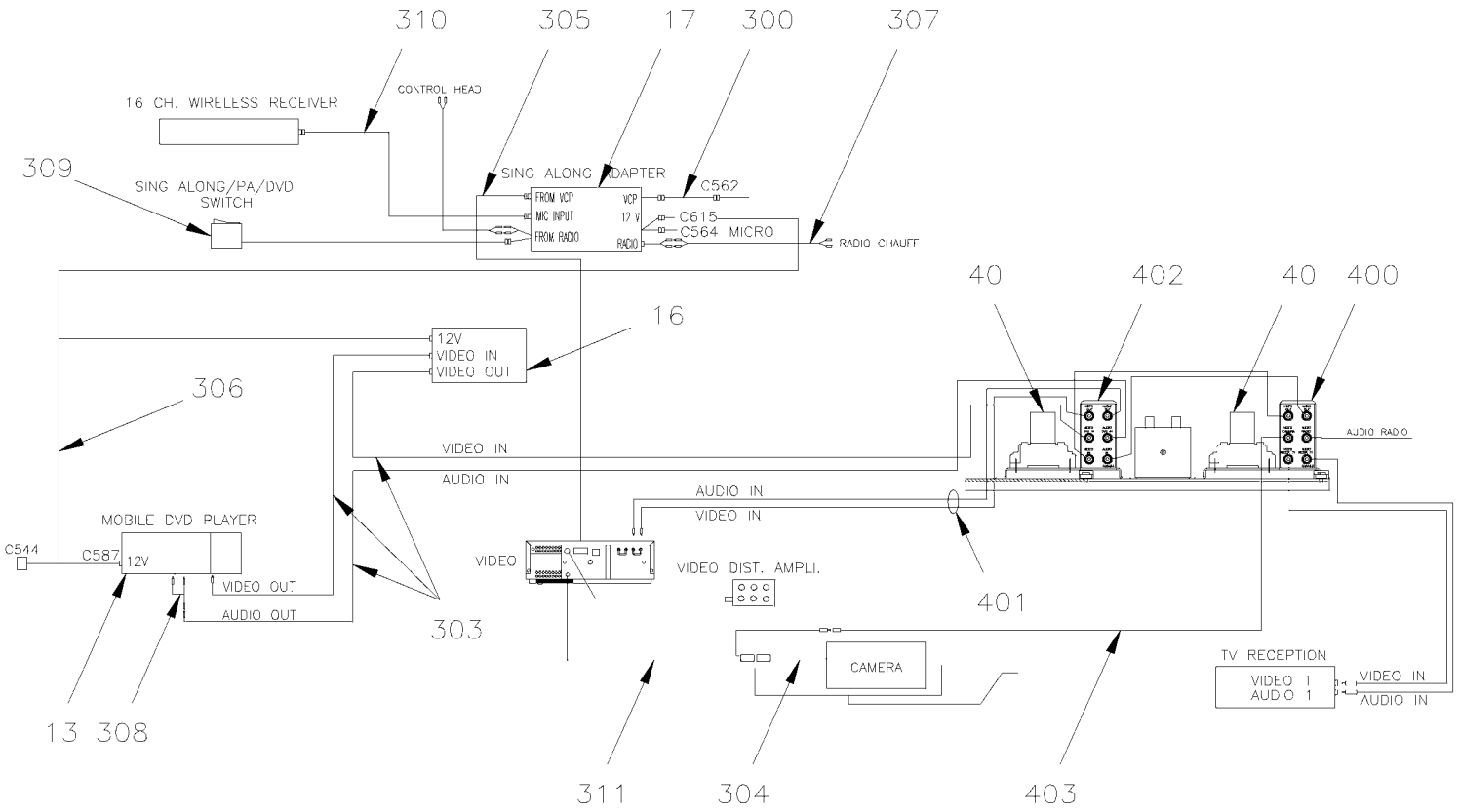

VCP, DVD, CAMERA AND TV RECEPTION

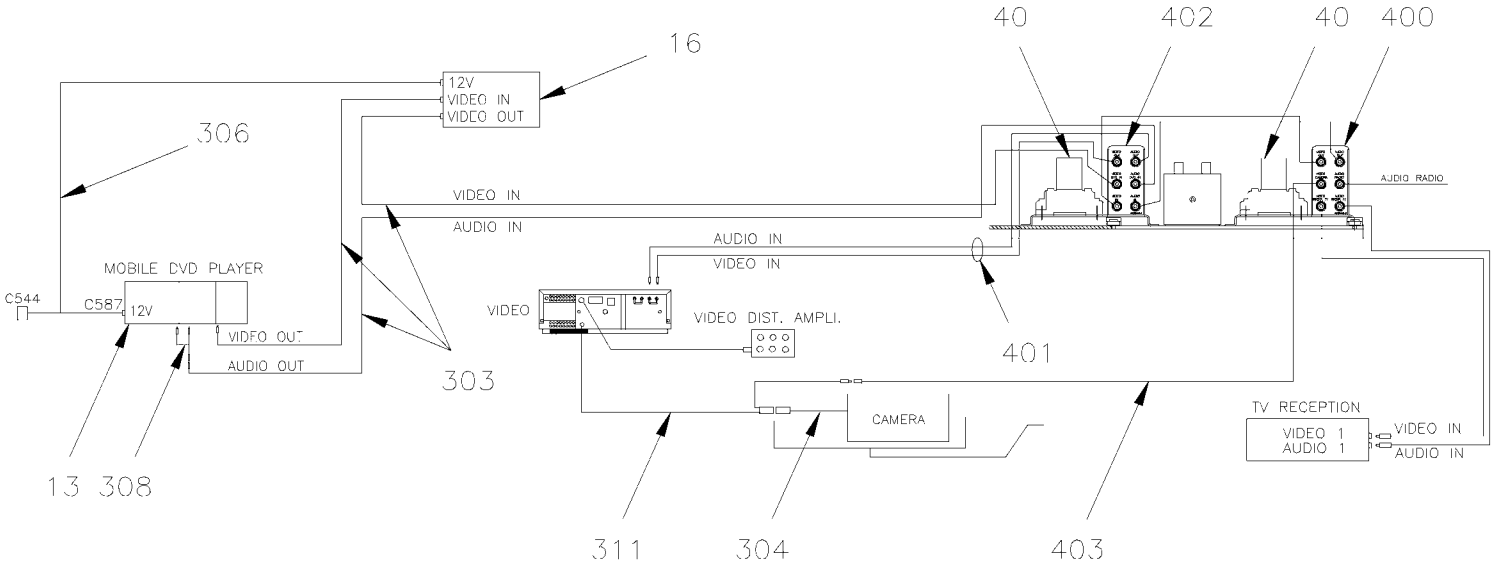

From 4-8271 To 5-8592		Date:07/2024	PAGE:Y2-2317-30
VIDEO & AUDIO SYSTEM - INSTALLATION			

VCP, TV RECEPTION WITH OR WITHOUT CAMERA

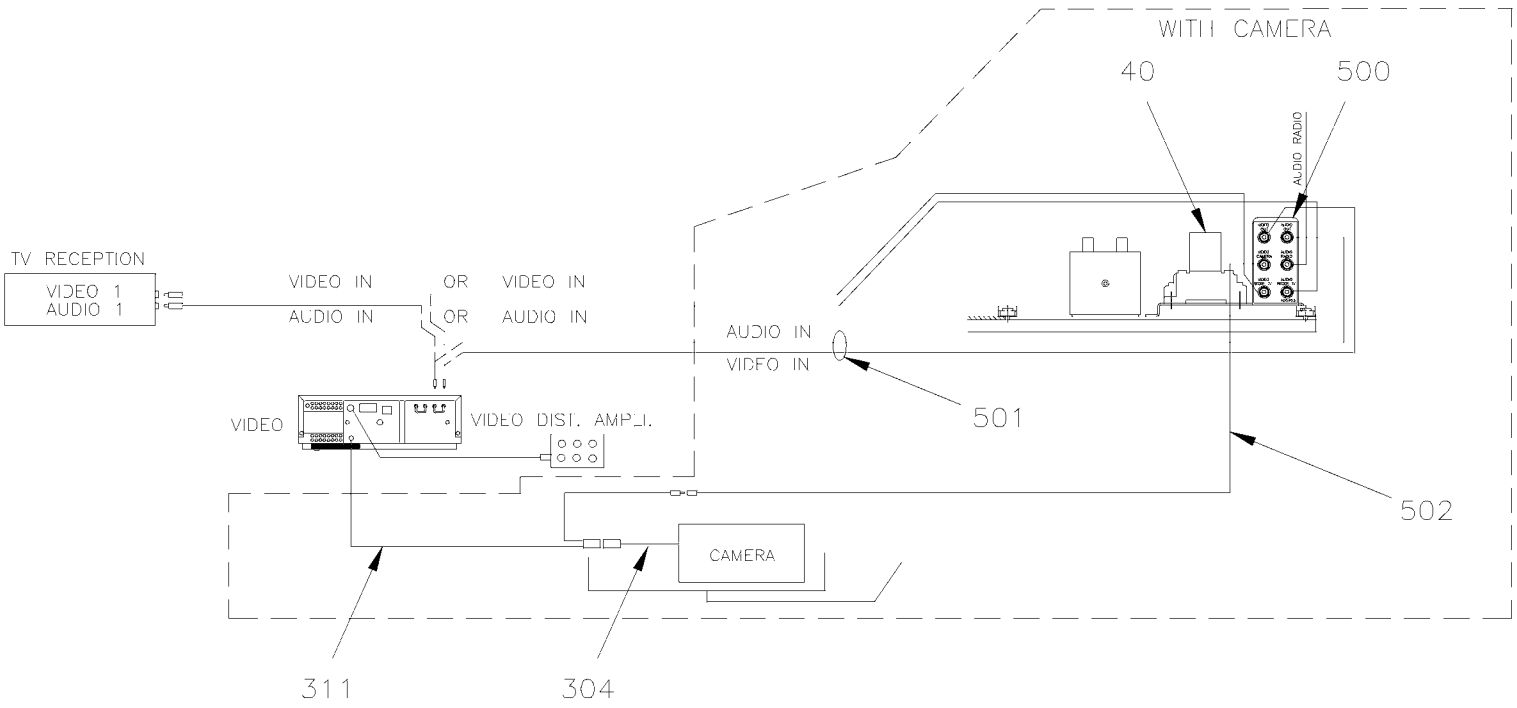

VCP WITH CAMERA

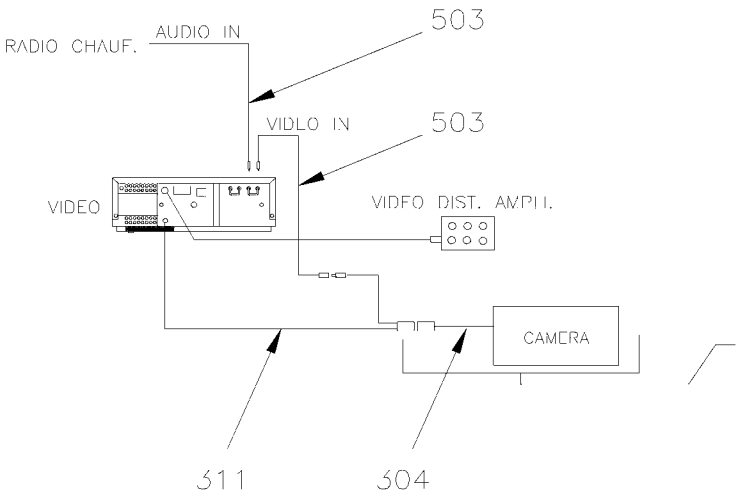

From 4-8271 To 5-8592		Date:07/2024	PAGE:Y2-2317-30

VIDEO & AUDIO SYSTEM - INSTALLATION

Item#	Part	Description	XLII 45	XLII MTH40	XLII MTH45	XLII MTH45E	NOTES
1	405482	MOUNTING PLATE	1				
2	901030	VIDEO V-3000 VCP, SYS 2000 24V	1				
. NS	901065	. REMOTE CONTROL / VDO REI V-3000	1				
2	7770197	KIT, VHS TO DVD CONVERSION	1				
. NS	901339	. DVD PLAYER 12V	1				
. . NS	901377	. . REMOTE CONTROL / DVD R.E.I.	1				
. NS	407639	. SUPPORT, DVD	1				
. NS	901347	. CABLE ASSY / W/2 BNC FEMALE/ FEMALE 1"	1				
. NS	901564	. ADAPTOR, RCA MALE TO BNC FEMALE	1				
. NS	563071	. CONNECTOR / MINI FIT JR / SH 4C / MOLEX 39-01-3042	1				
. NS	562593	. WIRE CABLE 18 / YELLOW / TXL	AR				
. NS	562587	. WIRE CABLE 18 / BLACK / TXL	AR				
. NS	562463	. SOCKET TERMINAL / 24-18 / MOLEX 39-00-0039	2				
. NS	563622	. BUTT SPLICE / 22-18 / RED / W/THERMORETRAC / PANDUIT BSH18-Q	2				
. NS	5001017	. SCREW TC CAP HEXW #10-24x1/2 Z050	4				
. NS	502853	. WASHER LO SPT 6.1x11.8x1.6 N500	1				
. NS	IS-16901A	. SEE INSTRUCTION SHEET	1				
3	405501	VCP L.H. ADAPTOR BRACKET	1				
4	405500	VCP R.H. ADAPTOR BRACKET	1				
5	500654	SCREW TC BDG PH #8-32x1/2 Z050	AR				
6	5001036	SCREW MA PAN PH M4-0.7x10 Z050	4				
7	502636	WASHER LO SPT 4.1x7.6x0.9 Z050	4				
8	901055	VIDEO DISTRIBUTION AMPLI W/BNC To 5-8437	1				
8	901117	VIDEO DISTRIBUTION AMPLI W/BNC From 5-8438	1				
. NS	901119	. CABLE POWER DVA/VIDEO From 5-8438	1				
8	901403	VIDEO DISTRIBUTION AMPLI W/BNC	1				S
9	504013	TIE MOUNT / 1/4" X 1/4" I.D.	3				
10	504637	CABLE TIE / 3/16" x 13"	AR				
11	405486	HARNESS, VIDEO PANEL	1				
12	404488	SUPPORT, RADIO	1				
13	901069	DVD REI / MP3 To 4-8290	1				
13	901096	DVD REI / MP3 From 4-8291 To 5-8437	1				
. NS	901098	. REMOTE CONTROL "MP3" DVD From 4-8291 To 5-8437	1				
13	901116	DVD REI / MP3 From 5-8438	1				
. NS	901264	. REMOTE CONTROL / DVD REI From 5-8438	1				
14	405499	SUPPORT DVD	2				
15	901074	KIT, TRIM PANEL DVD	1				
16	901034	STABILIZER VIDEO MODIFIED	1				A
17	901035	ADAPTOR KARAOKE	1				
18	900845	ENTERTAINER CONTROL MODULE	1				
19	500437	WASHER FL .125x.375x.040 Z050	8				
20	404542	SIDE PANEL FINISHING	2				

From 4-8271 To 5-8592		Date:07/2024	PAGE:Y2-2317-30

VIDEO & AUDIO SYSTEM - INSTALLATION

Item#	Part	Description	XLII 45	XLII MTH40	XLII MTH45	XLII MTH45E	NOTES
21	504475	RIVET POP CK OE 1/8x3/16 AL	8				
22	901078	RADIO "PIONEER" KEH-P1010 AM/FM/CASS.	1				
22	901046	RADIO "SONY" CDXL550X AM/FM/CD	1				
23	404498	CABLE ADAPTOR INTER. MODULE / 511211	1				
24	5001036	SCREW MA PAN PH M4-0.7x10 Z050	1				
25	500022	WASHER LO INT .168x.340x.023 Z050	1				
26	561667	CONNECTOR / UNIVERSAL MATE-N-LOK / PH 3C / AMP 1-480701-0	1				
27	562122	PIN TERMINAL / 20-14 / AMP 350547-1	2				
28	900849	PLATE RADIO "DUMMY"	AR				
29	900856	CABLE RCA / 2M/2M / 3'	1				
30	900758	ADAPTOR "Y" RCA / 1F/2M / 9"	1				
31	404380	CABLE ASSY RCA / M/M / USE WITH 2 VIDEOS / 510300	1				
32	900775	Y RADIO ANTENNA CABLE / TO USE W/2 RADIOS	1				
33	901022	CABLE SEAT AUDIO	2				
34	405483	PANEL TV RECEIVER	1				
35	901054	TUNER TV 24V	1				
36	506755	VELCRO / HOOK ADHESIF 1" x 75'	AR				
37	506756	VELCRO / LOOP ADHESIF 1" x 75'	AR				
38	900952	RECEIVER WIRELESS MICROPHONE / 16-CHANNEL To 5-8412	1				
. NS	901300	. ANTENNA RIGID / REAR OF RECEIVER To 5-8412	1				
38	901201	RECEIVER WIRELESS MICROPHONE / 16 CHANNEL From 5-8413	1				
39	901057	CD CHARGER / 8 DISCS / "PANASONIC" CX-DP88 / MODIFIED	1				
40	**Y2-2355-10**	**FRONT CAMERA - INSTALLATION**					
42	900663	ADAPTOR / RADIO & ANTENNA CABLE / MOTOROLA MALE to EURO FEMA	1				
43	901058	CABLE ASSY CD / DIN / 280"	1				
44	901059	CABLE RCA / 2M/2M / 23'	1				
45	404504	CABLE ASSY / RADIO POWER To 5-8592	1				
46	900855	CABLE RCA / 2M/2M / 20'	1				
47	064486	CABLE ASSY 24V POWER / ENT MODULE / 33.5' To 5-8592	1				
49	404302	CABLE ASSY 20' / 510520 /	1				
300	405326	WIRING HARNESS	1				
301	900856	CABLE RCA / 2M/2M / 3'	1				
302	405455	DECAL, VCR CAMERA & DVD RELAY / ENGLISH	1				
302	405651	DECAL, VCR CAMERA & DVD RELAY / ENGLISH & SPANISH	1				
303	404380	CABLE ASSY RCA / M/M / USE WITH 2 VIDEOS / 510300	2				
304	900912	CABLE ASSY / FRONT CAMERA	1				
305	405190	HARNESS INTERFACE VIDEO/SING ALONE ADAP	1				
306	405657	CABLE ASSY DVD	1				
307	900855	CABLE RCA / 2M/2M / 20'	2				
308	900758	ADAPTOR "Y" RCA / 1F/2M / 9"	1				
309	901036	SWITCH KARAOKE	1				
310	405191	HARNESS WIRE LESS MIC/SING ALONE ADAPTOR	1				

From 4-8271 To 5-8592		Date:07/2024	PAGE:Y2-2317-30

VIDEO & AUDIO SYSTEM - INSTALLATION

Item#	Part	Description	XLII 45	XLII MTH40	XLII MTH45	XLII MTH45E	NOTES
311	900913	CABLE ASSY / VIDEO & FRONT CAMERA	1				
312	900918	CABLE RCA / 1M/1F/ 3'	1				
400	405453	DECAL, VCR, CAMERA & TV RELAY	1				
401	900856	CABLE RCA / 2M/2M / 3'	1				
402	405454	DECAL, VCR & DVD RELAY	1				
403	900918	CABLE RCA / 1M/1F/ 3'	1				
500	405453	DECAL, VCR, CAMERA & TV RELAY	1				
501	900856	CABLE RCA / 2M/2M / 3'	1				
502	900918	CABLE RCA / 1M/1F/ 3'	1				
503	900866	CABLE RCA / 1M/1M / 25'	1				
NS	405660	KIT, DVD REPLACMENT	1				
. NS	IS-04036	. SEE INSTRUCTION SHEET	1				
NS	405659	KIT, VIDEO STABILIZATOR REPLACMENT	1				
. NS	IS-03099	. SEE INSTRUCTION SHEET	1				
		A) THIS PART IS SUPERSEEDED BY KIT #405659					
		S) FOR SERVICE					

From 5-8593 To 6-8906		Date:07/2024	PAGE:Y2-2317-31

VIDEO & AUDIO SYSTEM - INSTALLATION

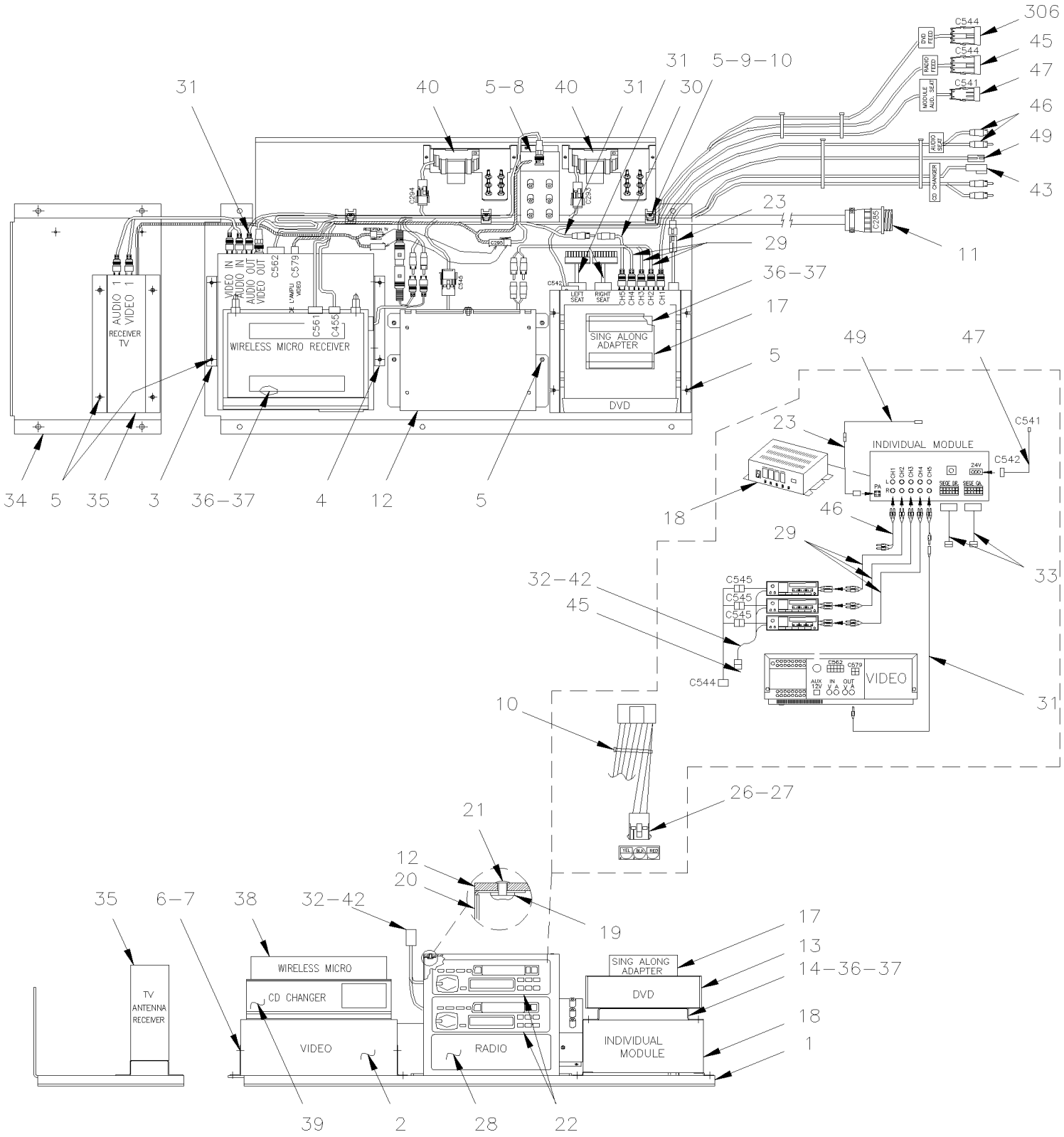

From 5-8593 To 6-8906		Date:07/2024	PAGE:Y2-2317-31
VIDEO & AUDIO SYSTEM - INSTALLATION			

COMPONENTS POSITION
W/O INDIVIDUAL LISTENING

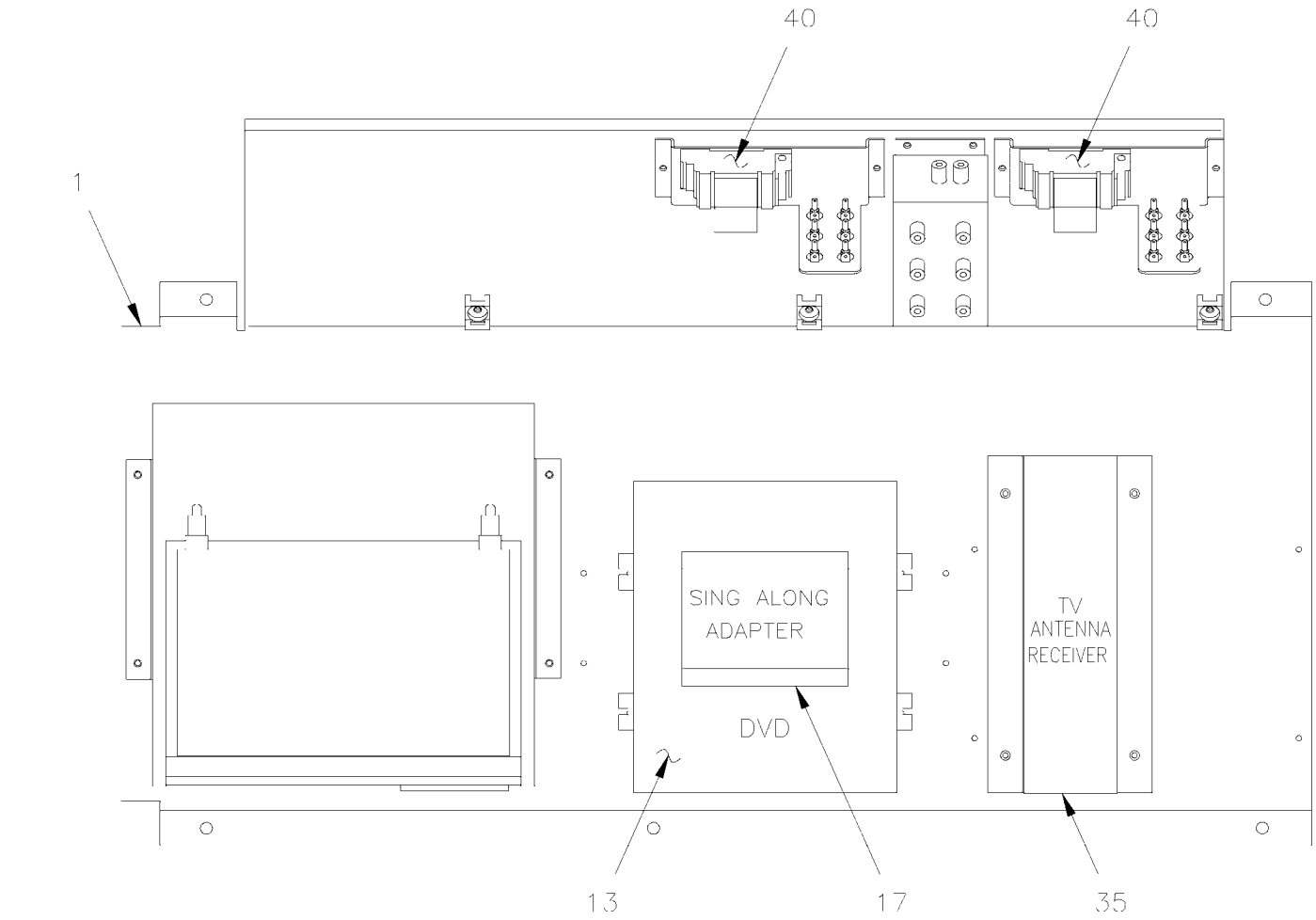

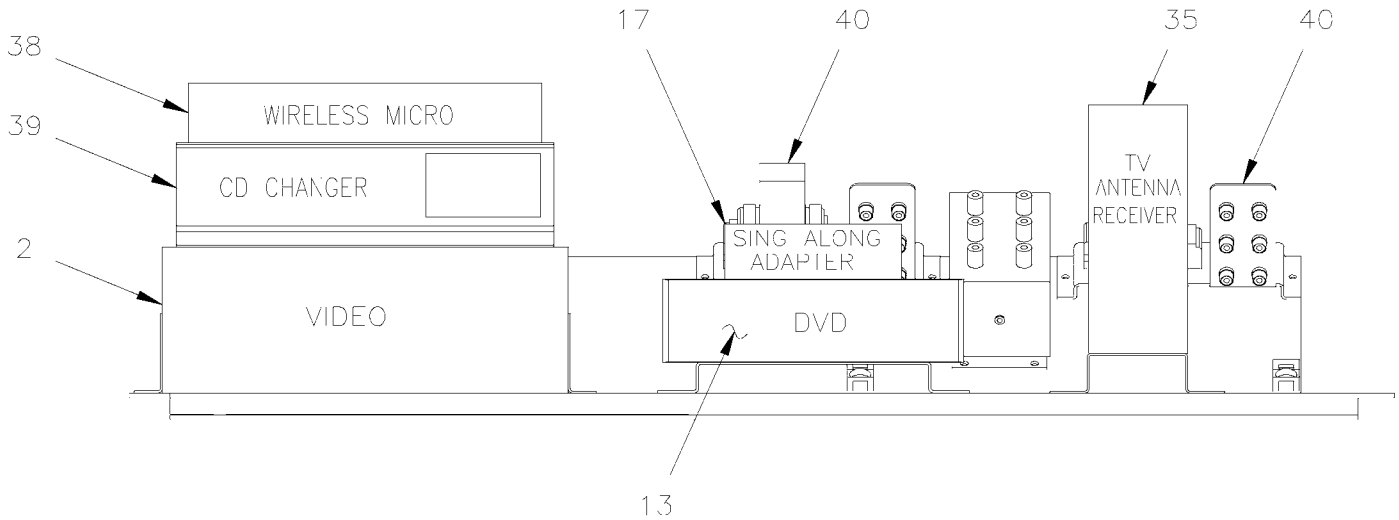

From 5-8593 To 6-8906		Date:07/2024	PAGE:Y2-2317-31
VIDEO & AUDIO SYSTEM - INSTALLATION			

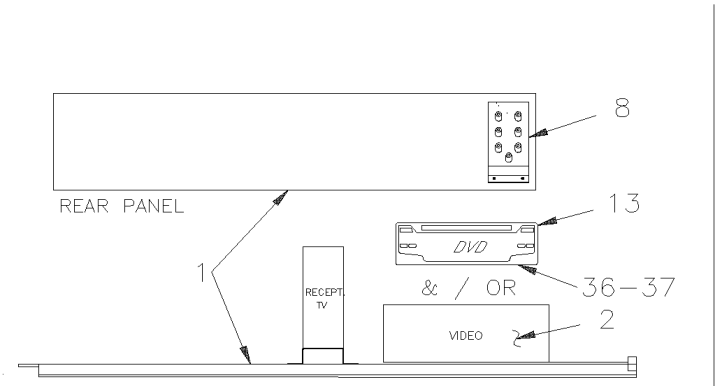

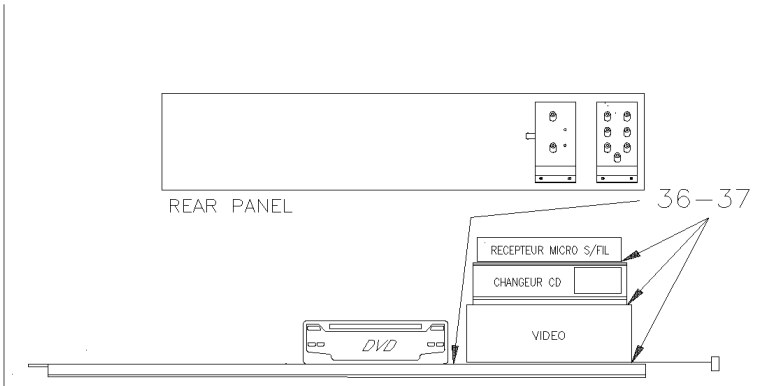

VIDEO WITH CHARGER CD & WIRELESS MICROPHONE (WITH OR WITHOUT DVD)

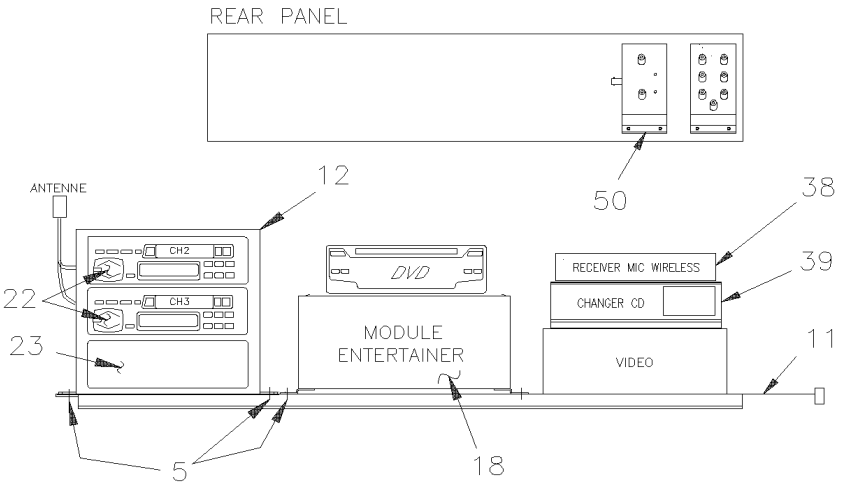

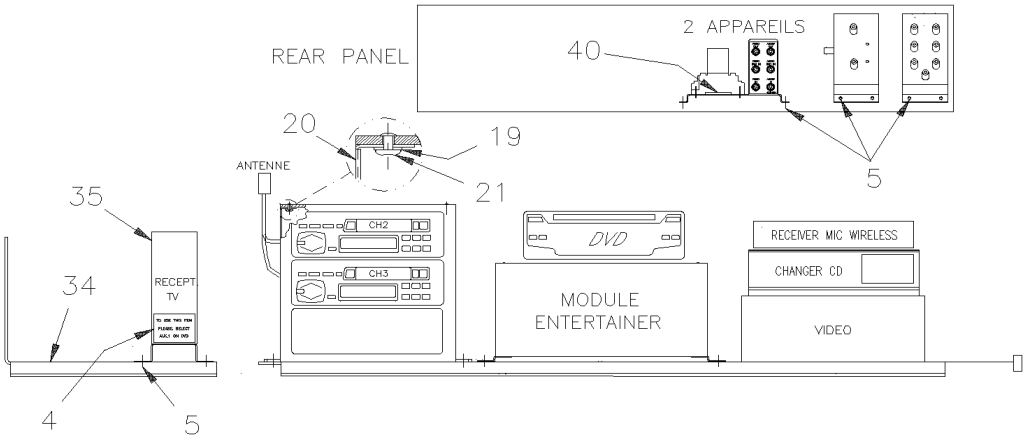

From 5-8593 To 6-8906		Date:07/2024	PAGE:Y2-2317-31

VIDEO & AUDIO SYSTEM - INSTALLATION

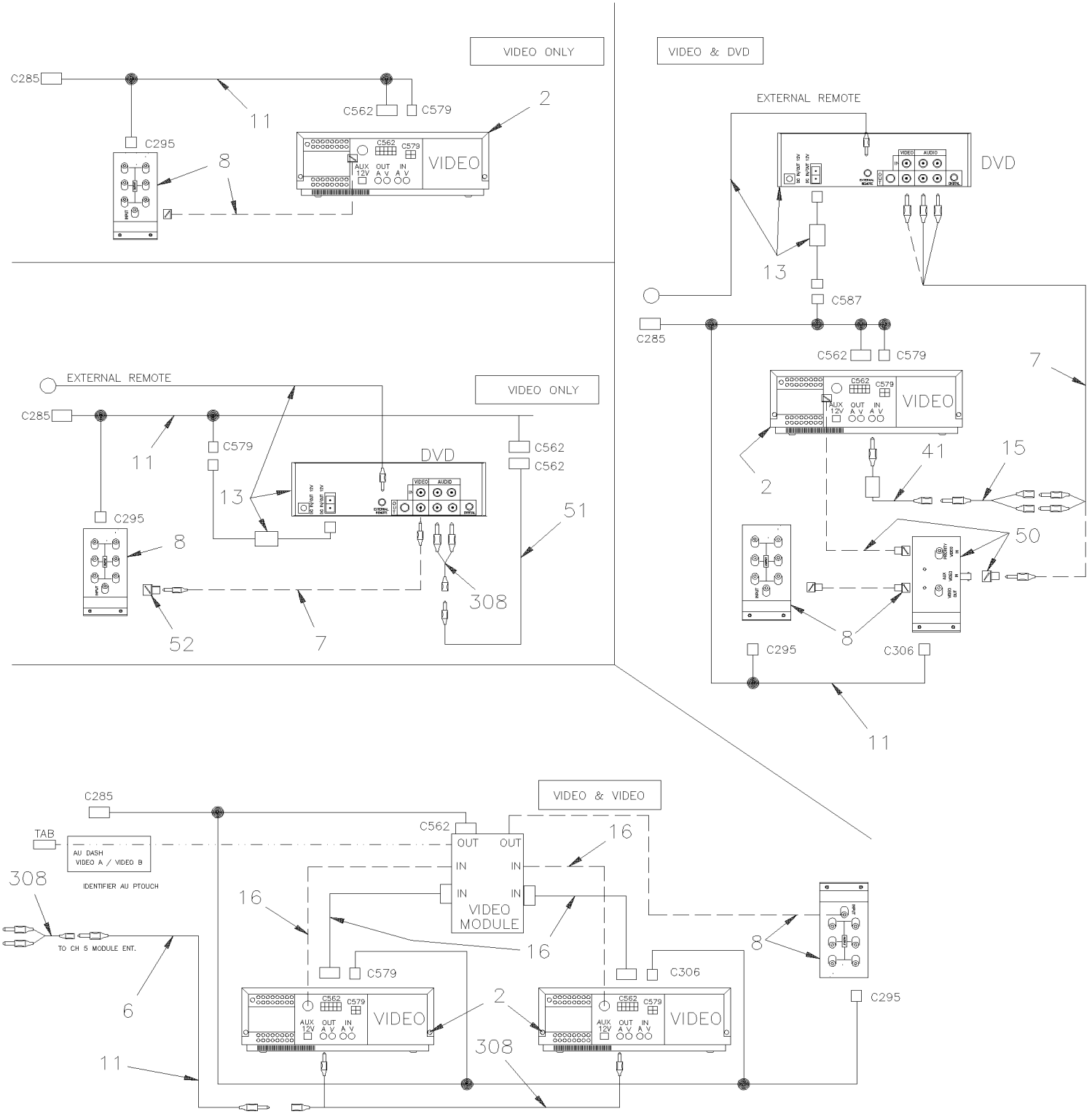

From 5-8593 To 6-8906		Date:07/2024	PAGE:Y2-2317-31

VIDEO & AUDIO SYSTEM - INSTALLATION

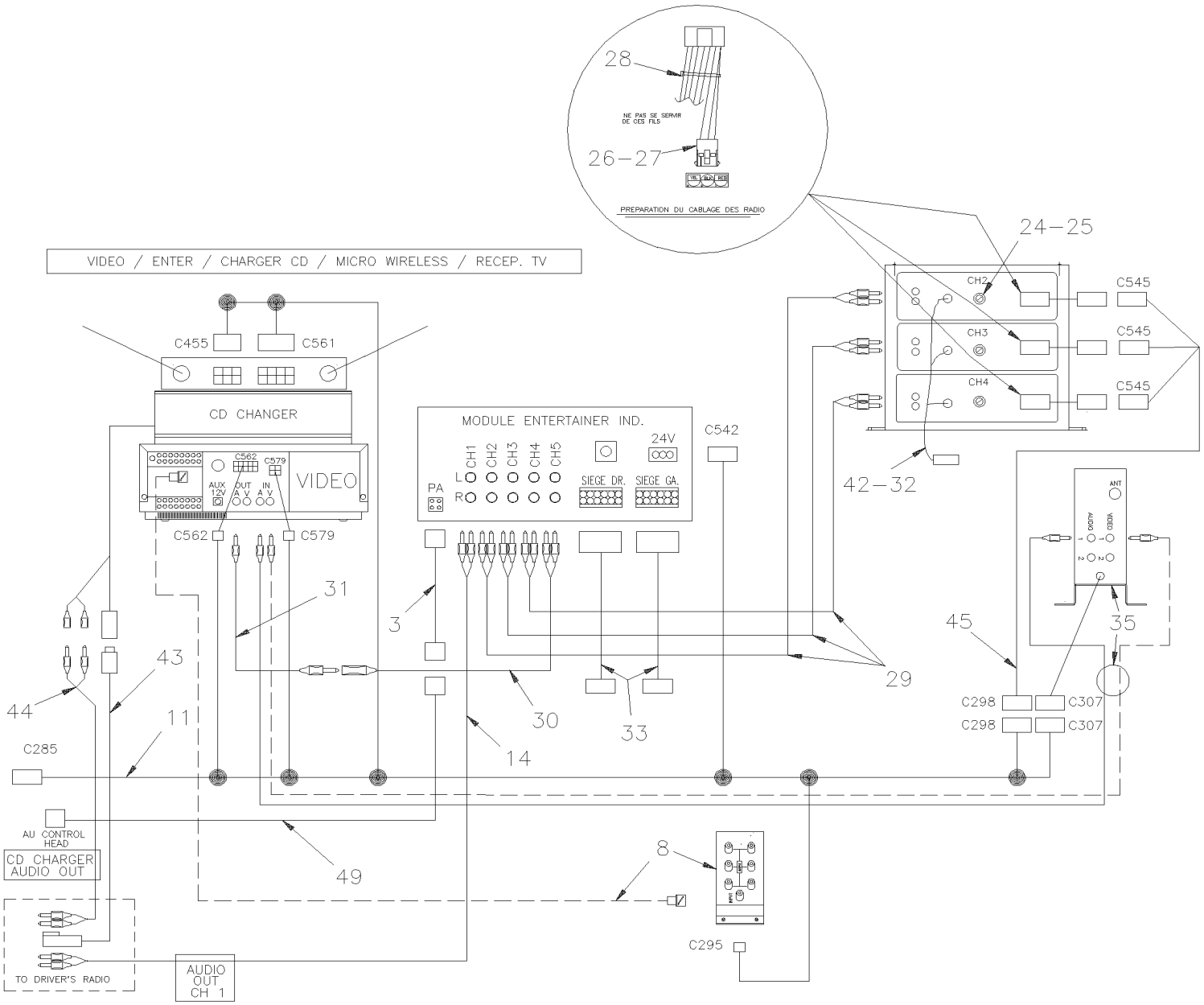

From 5-8593 To 6-8906		Date:07/2024	PAGE:Y2-2317-31

VIDEO & AUDIO SYSTEM - INSTALLATION

VIDEO / RECEP.TV OR FRONT CAMERA

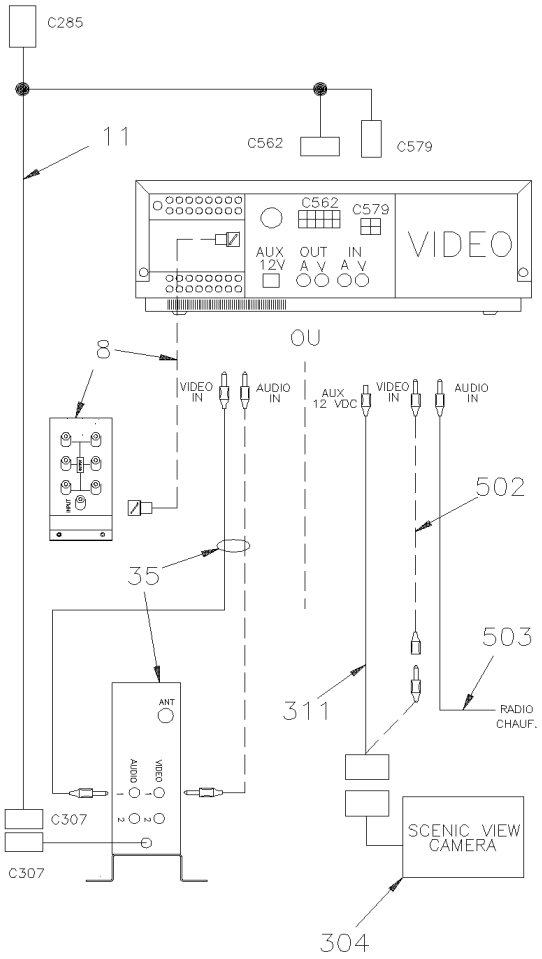

VIDEO / RECEP.TV / FRONT CAMERA

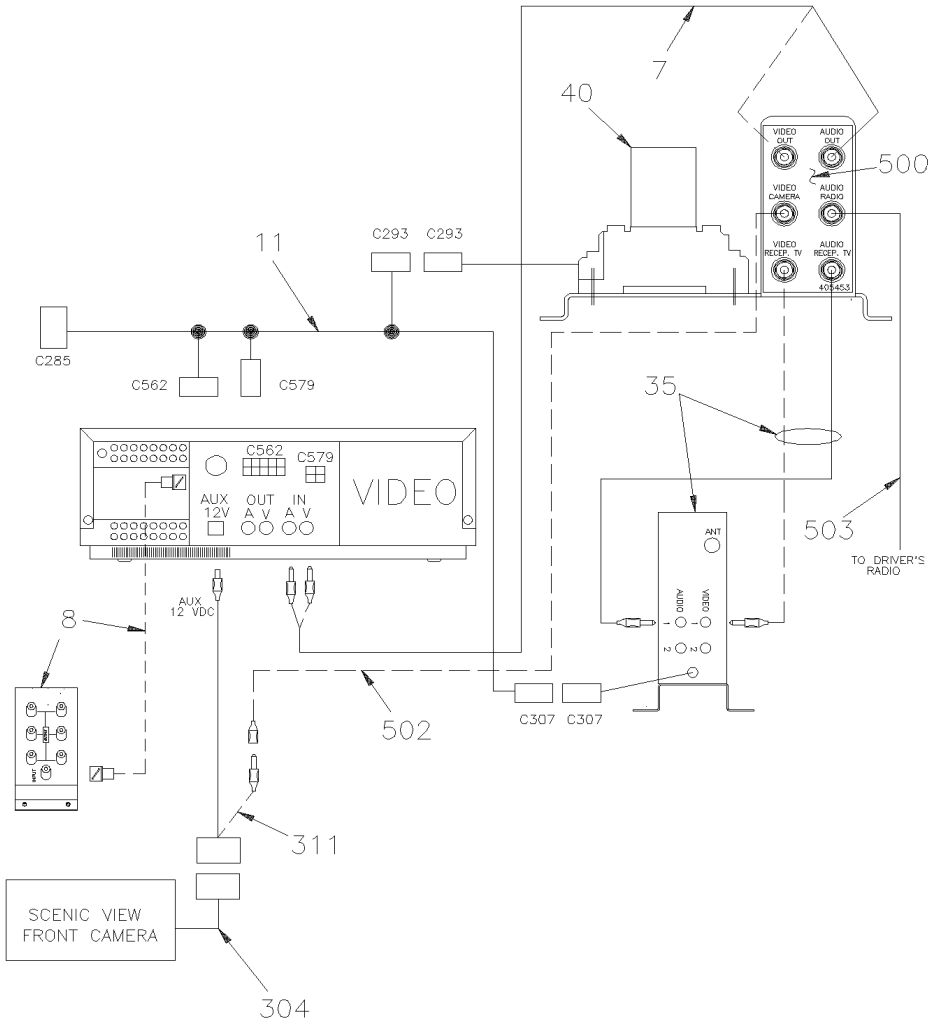

From 5-8593 To 6-8906		Date:07/2024	PAGE:Y2-2317-31
VIDEO & AUDIO SYSTEM - INSTALLATION			

VIDEO / DVD / RECEP.TV OR FRONT CAMERA

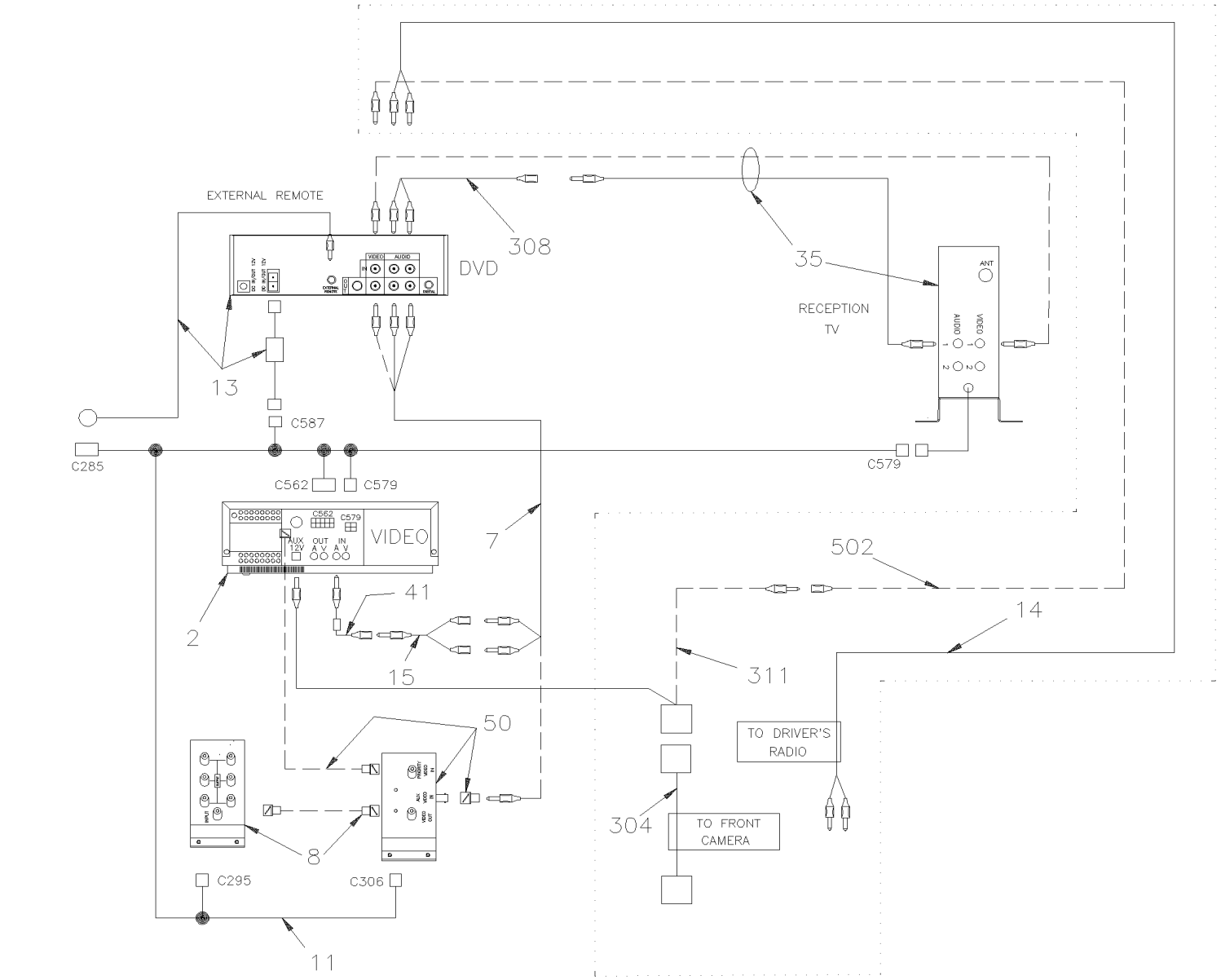

From 5-8593 To 6-8906		Date:07/2024	PAGE:Y2-2317-31

VIDEO & AUDIO SYSTEM - INSTALLATION

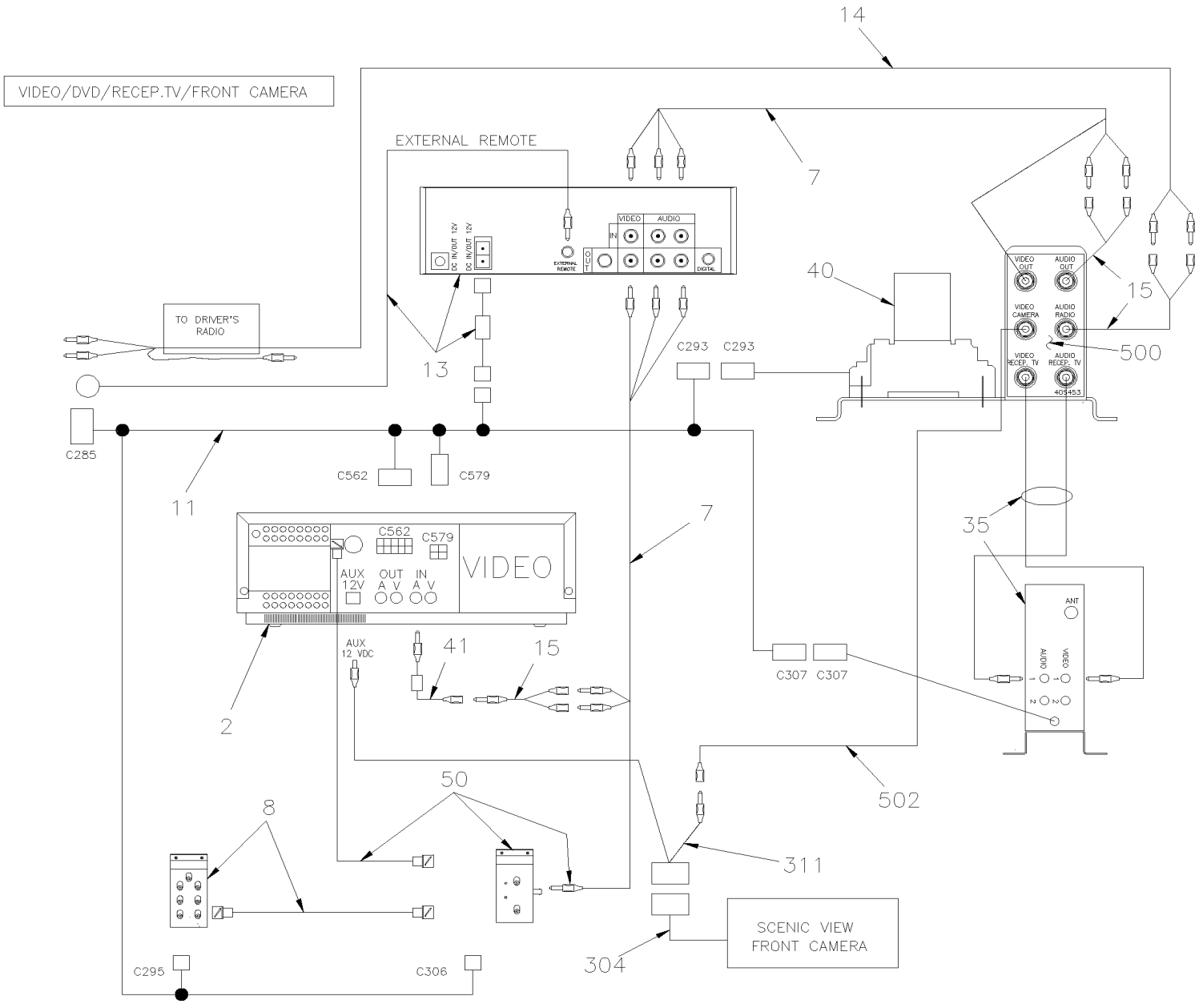

From 5-8593 To 6-8906		Date:07/2024	PAGE:Y2-2317-31

VIDEO & AUDIO SYSTEM - INSTALLATION

Item#	Part	Description	XLII 45	XLII MTH40	XLII MTH45	XLII MTH45E	NOTES
1	409125	MOUNTING PLATE	1				
2	901030	VIDEO V-3000 VCP, SYS 2000 24V	1				
. NS	901065	. REMOTE CONTROL / VDO REI V-3000	1				
2	7770197	KIT, VHS TO DVD CONVERSION	1				
. NS	901339	. DVD PLAYER 12V	1				
. . NS	901377	. . REMOTE CONTROL / DVD R.E.I.	1				
. NS	407639	. SUPPORT, DVD	1				
. NS	901347	. CABLE ASSY / W/2 BNC FEMALE/ FEMALE 1"	1				
. NS	901564	. ADAPTOR, RCA MALE TO BNC FEMALE	1				
. NS	563071	. CONNECTOR / MINI FIT JR / SH 4C / MOLEX 39-01-3042	1				
. NS	562593	. WIRE CABLE 18 / YELLOW / TXL	AR				
. NS	562587	. WIRE CABLE 18 / BLACK / TXL	AR				
. NS	562463	. SOCKET TERMINAL / 24-18 / MOLEX 39-00-0039	2				
. NS	563622	. BUTT SPLICE / 22-18 / RED / W/THERMORETRAC / PANDUIT BSH18-Q	2				
. NS	5001017	. SCREW TC CAP HEXW #10-24x1/2 Z050	4				
. NS	502853	. WASHER LO SPT 6.1x11.8x1.6 N500	1				
. NS	IS-16901A	. SEE INSTRUCTION SHEET	1				
3	405501	VCP L.H. ADAPTOR BRACKET	1				
4	405500	VCP R.H. ADAPTOR BRACKET	1				
5	500654	SCREW TC BDG PH #8-32x1/2 Z050	AR				
6	5001036	SCREW MA PAN PH M4-0.7x10 Z050	4				
7	502636	WASHER LO SPT 4.1x7.6x0.9 Z050	4				
8	901117	VIDEO DISTRIBUTION AMPLI W/BNC	1				
. NS	901119	. CABLE POWER DVA/VIDEO	1				
8	901403	VIDEO DISTRIBUTION AMPLI W/BNC	1				S
9	504013	TIE MOUNT / 1/4" X 1/4" I.D.	3				
10	504637	CABLE TIE / 3/16" x 13"	AR				
11	409122	HARNESS, VIDEO PANEL To 6-8797	1				
11	409146	HARNESS, VIDEO PANEL From 6-8798	1				
12	404488	SUPPORT, RADIO	1				
13	901116	DVD REI / MP3	1				
. NS	901264	. REMOTE CONTROL / DVD REI	1				
14	405499	SUPPORT DVD	2				
15	900671	ADAPTOR "Y" RCA / 1M/2F / 4"	1				
16	901119	CABLE POWER DVA/VIDEO	1				
17	901035	ADAPTOR KARAOKE	1				
18	900845	ENTERTAINER CONTROL MODULE	1				
19	500437	WASHER FL .125x.375x.040 Z050	8				
20	404542	SIDE PANEL FINISHING	2				
21	504475	RIVET POP CK OE 1/8x3/16 AL	8				
22	901078	RADIO "PIONEER" KEH-P1010 AM/FM/CASS.	1				
22	901046	RADIO "SONY" CDXL550X AM/FM/CD	1				

From 5-8593 To 6-8906		Date:07/2024	PAGE:Y2-2317-31

VIDEO & AUDIO SYSTEM - INSTALLATION

Item#	Part	Description	XLII 45	XLII MTH40	XLII MTH45	XLII MTH45E	NOTES
23	404498	CABLE ADAPTOR INTER. MODULE / 511211	1				
24	5001036	SCREW MA PAN PH M4-0.7x10 Z050	1				
25	500022	WASHER LO INT .168x.340x.023 Z050	1				
26	561667	CONNECTOR / UNIVERSAL MATE-N-LOK / PH 3C / AMP 1-480701-0	1				
27	562122	PIN TERMINAL / 20-14 / AMP 350547-1	2				
28	900849	PLATE RADIO "DUMMY"	AR				
29	900856	CABLE RCA / 2M/2M / 3'	1				
30	900758	ADAPTOR "Y" RCA / 1F/2M / 9"	1				
31	404380	CABLE ASSY RCA / M/M / USE WITH 2 VIDEOS / 510300	1				
32	900775	Y RADIO ANTENNA CABLE / TO USE W/2 RADIOS	1				
33	901022	CABLE SEAT AUDIO	2				
34	405483	PANEL TV RECEIVER	1				
35	901054	TUNER TV 24V	1				
36	506755	VELCRO / HOOK ADHESIF 1" x 75'	AR				
37	506756	VELCRO / LOOP ADHESIF 1" x 75'	AR				
38	901201	RECEIVER WIRELESS MICROPHONE / 16 CHANNEL	1				
39	901057	CD CHARGER / 8 DISCS / "PANASONIC" CX-DP88 / MODIFIED	1				
40	**Y2-2355-10**	**FRONT CAMERA - INSTALLATION**					
41	901106	AUDIO FILTER	1				
42	900663	ADAPTOR / RADIO & ANTENNA CABLE / MOTOROLA MALE to EURO FEMA	1				
43	901058	CABLE ASSY CD / DIN / 280"	1				
44	901059	CABLE RCA / 2M/2M / 23'	1				
44	901110	CABLE RCA / 2M/2M / 25'	1				
46	900855	CABLE RCA / 2M/2M / 20'	1				
47	064486	CABLE ASSY 24V POWER / ENT MODULE / 33.5' To 5-8592	1				
49	404302	CABLE ASSY 20' / 510520 /	1				
50	901120	VIDEO SIGNAL DETECTOR / USE W/2 SIGNALS	1				
300	405326	WIRING HARNESS	1				
301	900856	CABLE RCA / 2M/2M / 3'	1				
302	405455	DECAL, VCR CAMERA & DVD RELAY / ENGLISH	1				
302	405651	DECAL, VCR CAMERA & DVD RELAY / ENGLISH & SPANISH	1				
303	404380	CABLE ASSY RCA / M/M / USE WITH 2 VIDEOS / 510300	2				
304	900912	CABLE ASSY / FRONT CAMERA	1				
305	405190	HARNESS INTERFACE VIDEO/SING ALONE ADAP	1				
306	405657	CABLE ASSY DVD	1				
307	900855	CABLE RCA / 2M/2M / 20'	2				
308	900758	ADAPTOR "Y" RCA / 1F/2M / 9"	1				
309	901036	SWITCH KARAOKE	1				
310	405191	HARNESS WIRE LESS MIC/SING ALONE ADAPTOR	1				
311	900913	CABLE ASSY / VIDEO & FRONT CAMERA	1				
312	900918	CABLE RCA / 1M/1F/ 3'	1				
400	405453	DECAL, VCR, CAMERA & TV RELAY	1				

From 5-8593 To 6-8906		Date:07/2024	PAGE:Y2-2317-31

VIDEO & AUDIO SYSTEM - INSTALLATION

Item#	Part	Description	XLII 45	XLII MTH40	XLII MTH45	XLII MTH45E	NOTES
401	900856	CABLE RCA / 2M/2M / 3'	1				
402	405454	DECAL, VCR & DVD RELAY	1				
403	900918	CABLE RCA / 1M/1F/ 3'	1				
500	405453	DECAL, VCR, CAMERA & TV RELAY	1				
501	900856	CABLE RCA / 2M/2M / 3'	1				
502	900918	CABLE RCA / 1M/1F/ 3'	1				
503	900866	CABLE RCA / 1M/1M / 25'	1				
		S) FOR SERVICE					

From RETROFIT		Date:07/2024	PAGE:Y2-2317-99
VIDEO & AUDIO SYSTEM - INSTALLATION			

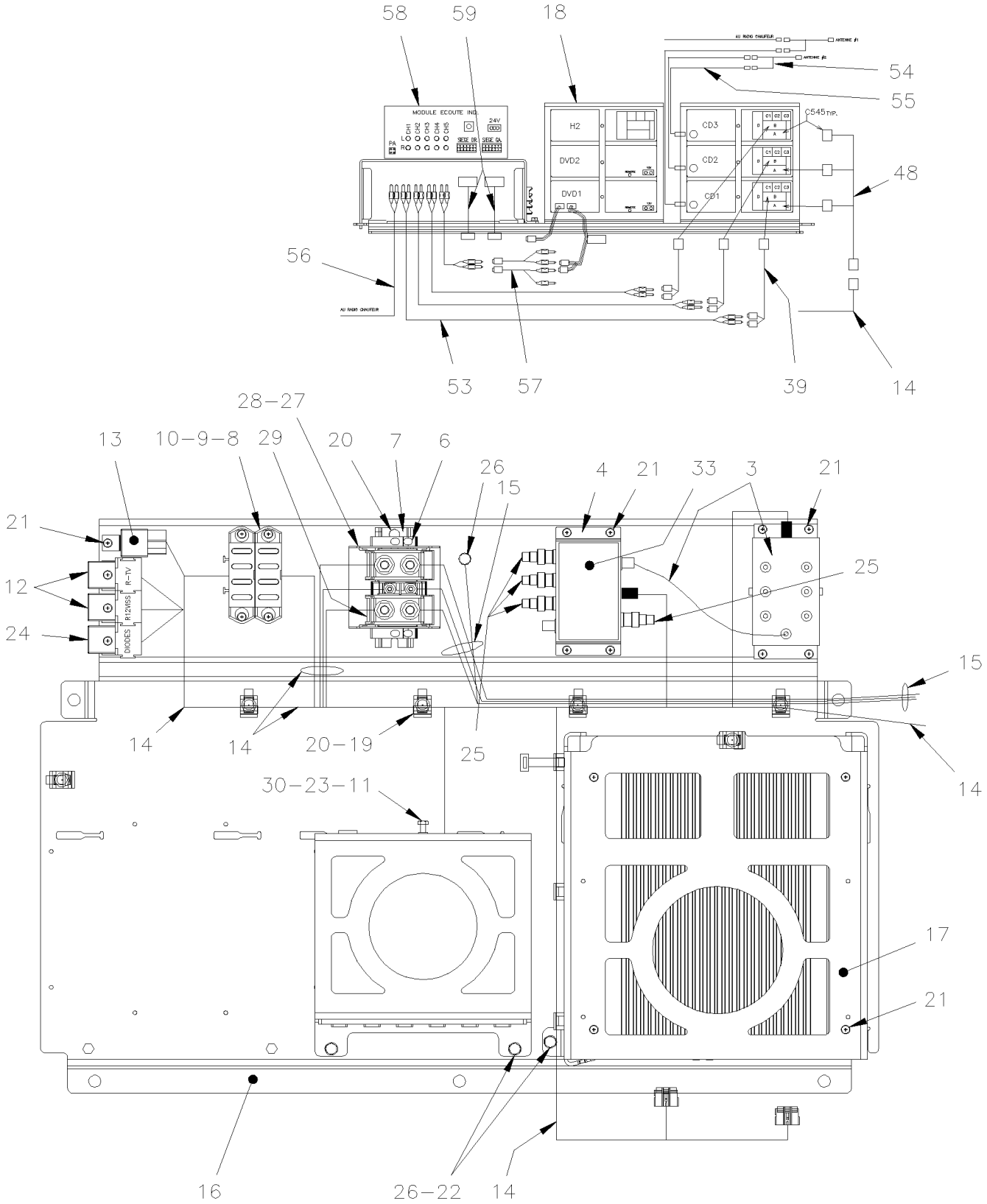

From RETROFIT		Date:07/2024	PAGE:Y2-2317-99
VIDEO & AUDIO SYSTEM - INSTALLATION			

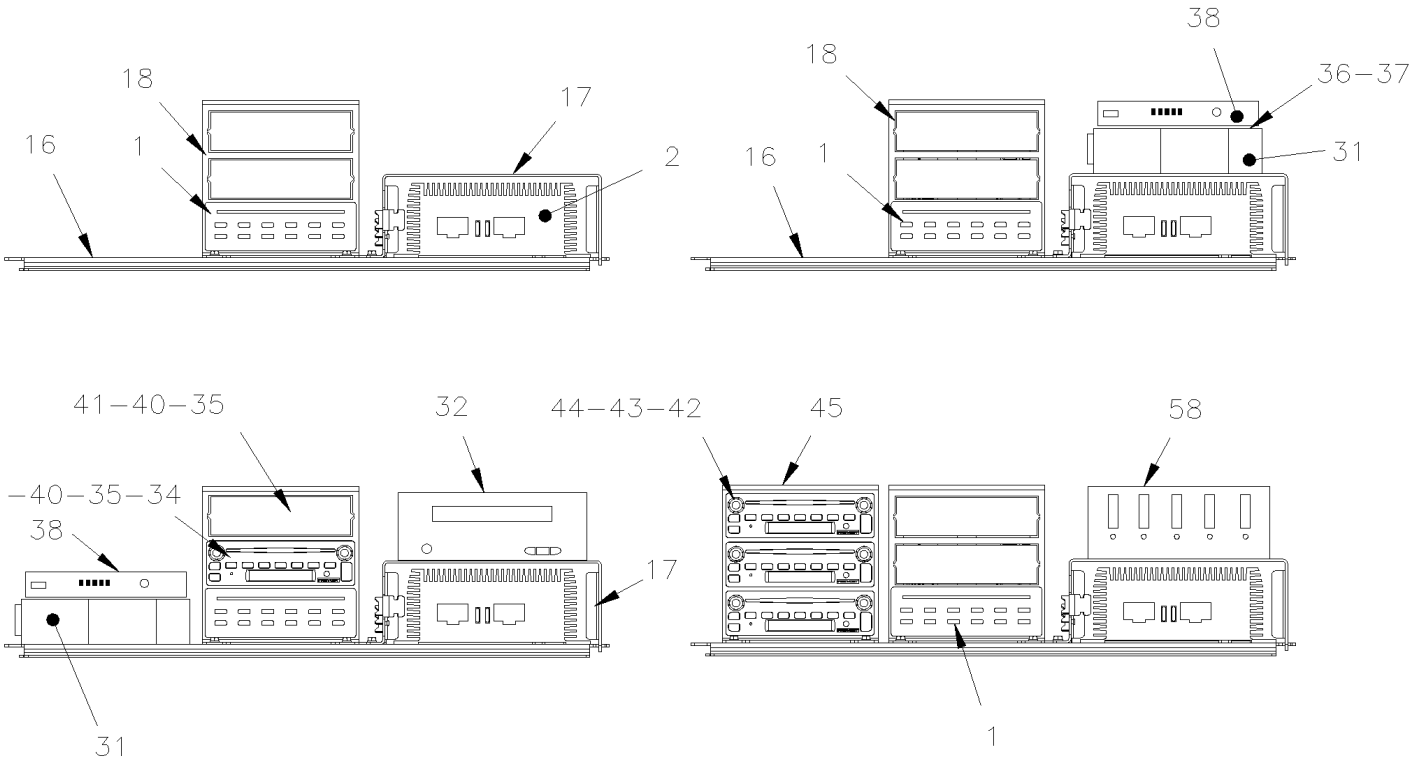

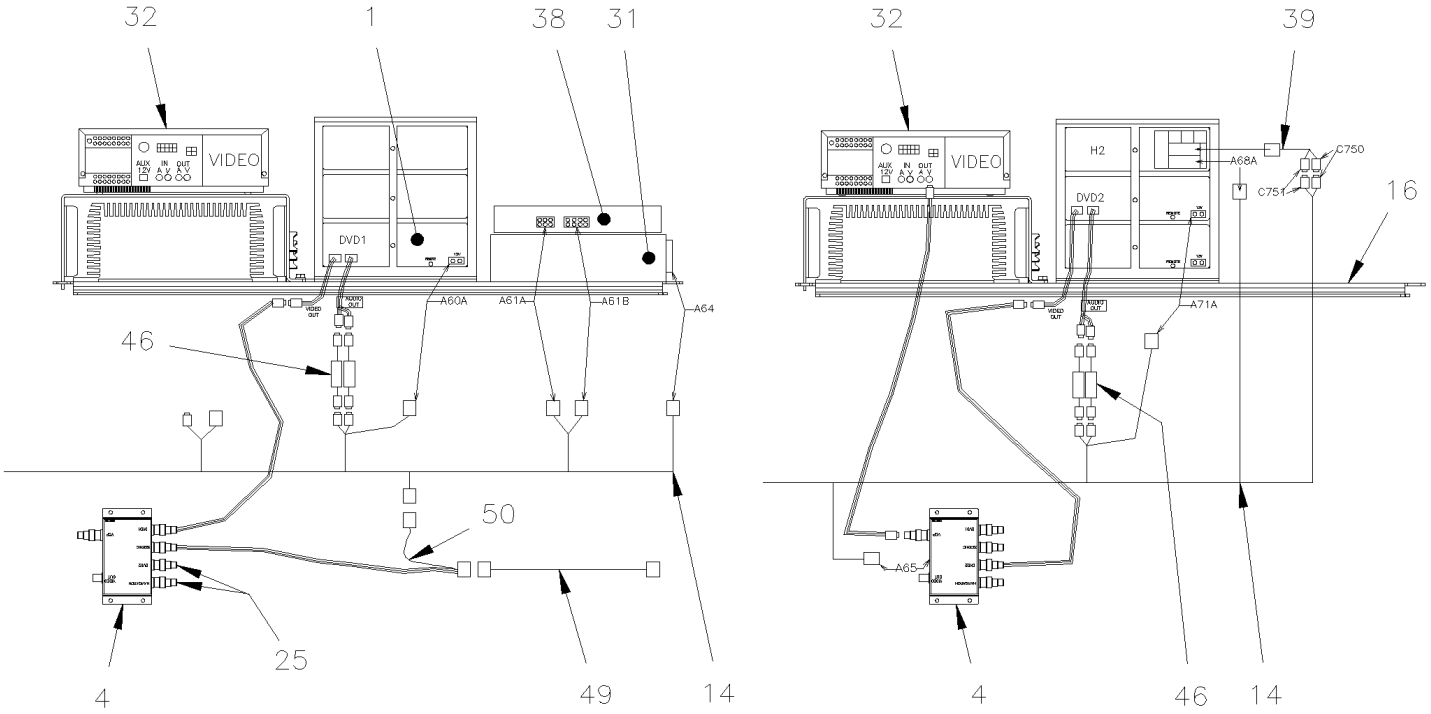

From RETROFIT		Date:07/2024	PAGE:Y2-2317-99
VIDEO & AUDIO SYSTEM - INSTALLATION			

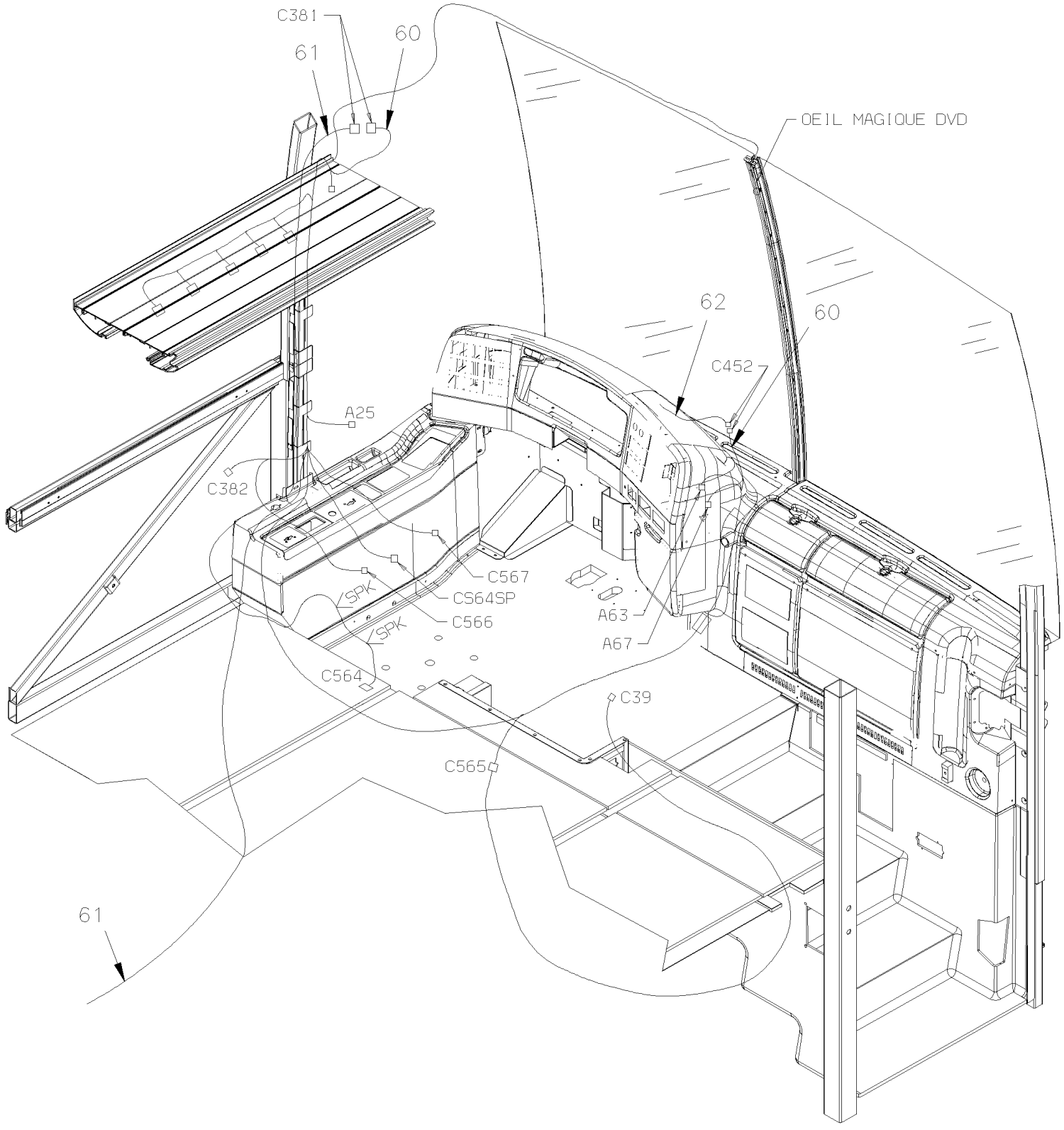

From RETROFIT		Date:07/2024	PAGE:Y2-2317-99

VIDEO & AUDIO SYSTEM - INSTALLATION

Item#	Part	Description	XLII 45	XLII MTH40	XLII MTH45	XLII MTH45E	NOTES
	405845	PLATE AUDIO ASSY WITH COMPONENTS	1				
1	901198	. DVD PLAYER 12V (VOLVO) VD-404	1				
. NS	901265	. . REMOTE CONTROL / DVD VOLVO	1				
. NS	901302	. . SENSOR ASSY W/CABLE / DVD REMOTE CONTROL	1				
1	901339	. DVD PLAYER 12V	1				
. NS	901377	. . REMOTE CONTROL / DVD R.E.I.	1				
NS	409294	. CABLE INTERFACE DVD "VOLVO" to DVD "REI" 4 CONN. to 6 CONN.	1				T
2	901191	. AMPLIFICATOR AUDIO / 400 WATTS / ONKYO	1				
3	901117	. VIDEO DISTRIBUTION AMPLI W/BNC	1				
. NS	901119	. . CABLE POWER DVA/VIDEO	1				
3	901403	. VIDEO DISTRIBUTION AMPLI W/BNC	1				T
4	901199	. SCREEN PLAY SELECTOR	1				
5	561726	. BLOCK JUNCTION	1				
6	562645	. STOPPER "U" RAIL	2				
7	382184	. RAIL SUPPORT "U" SHAPE 112MM	1				
8	562598	. FUSE / ATO 2 AMPS GREY	1				
8	562407	. FUSE / ATO 10 AMPS RED	4				
9	562396	. FUSE / ATO 30 AMPS GREEN	1				
10	562605	. FUSE / ATO 20 AMPS YELLOW	1				
11	500470	. WASHER LO SPT .193x.334x.047 Z050	1				
12	563337	. RELAY 12V S.P.D.T. W/RESISTOR /	2				
13	561991	. RELAY 24V S.P.S.T. / 70 AMPS N.O.	1				
14	066770	. CABLE ASSY / DASH & PARCEL RACK	1				
15	066866	. CABLE POWER	1				
16	405884	. PLATE SUPPORT MAIN SYSTEM	1				
17	405921	. SUPPORT VIDEO OVER AMPLI	1				
18	405922	. SUPPORT, RADIO (MORE THAN 3 RADIO) & DVD VOLVO	1				
18	406361	. SUPPORT, RADIO (3 RADIO) & DVD REI	1				
18	406360	. SUPPORT, RADIO (1RADIO) & DVD REI	1				
19	504013	. TIE MOUNT / 1/4" X 1/4" I.D.	9				
20	504347	. RIVET POP DOME OE 3/16x1/4 AL	9				
21	500564	. SCREW MA RND PH #8-32x3/4 Z050	16				
22	502631	. SCREW CAP HEX M6-1.0x20 G8.8 Z050	8				
23	502561	. NUT HEX M5-0.8 Z050	1				
24	901200	. DIODE BLOCK ON RELAY BASE	1				
25	900777	. CONNECTOR BNC PLUG TO RCA ADAPTOR / ELEC 21-142-0	AR				
26	502564	. WASHER LO SPT 6.1x11.8x1.6 Z050	1				
27	562024	. COVER / PROTECTOR / 3 BLOCKS	1				
28	561731	. COVER SUPPORT	2				
29	561727	. JUNCTION BLOCK	2				
30	5001146	. SCREW CAP HEX M5-0.8x20 SS BK	1				
31	901116	DVD REI / MP3	1				

From RETROFIT		Date:07/2024	PAGE:Y2-2317-99

VIDEO & AUDIO SYSTEM - INSTALLATION

Item#	Part	Description	XLII 45	XLII MTH40	XLII MTH45	XLII MTH45E	NOTES
. NS	901264	. REMOTE CONTROL / DVD REI	1				
32	901030	VIDEO V-3000 VCP, SYS 2000 24V	1				
. NS	901065	. REMOTE CONTROL / VDO REI V-3000	1				
32	7770197	KIT, VHS TO DVD CONVERSION	1				
. NS	901339	. DVD PLAYER 12V	1				
. . NS	901377	. . REMOTE CONTROL / DVD R.E.I.	1				
. NS	407639	. SUPPORT, DVD	1				
. NS	901347	. CABLE ASSY / W/2 BNC FEMALE/ FEMALE 1"	1				
. NS	901564	. ADAPTOR, RCA MALE TO BNC FEMALE	1				
. NS	563071	. CONNECTOR / MINI FIT JR / SH 4C / MOLEX 39-01-3042	1				
. NS	562593	. WIRE CABLE 18 / YELLOW / TXL	AR				
. NS	562587	. WIRE CABLE 18 / BLACK / TXL	AR				
. NS	562463	. SOCKET TERMINAL / 24-18 / MOLEX 39-00-0039	2				
. NS	563622	. BUTT SPLICE / 22-18 / RED / W/THERMORETRAC / PANDUIT BSH18-Q	2				
. NS	5001017	. SCREW TC CAP HEXW #10-24x1/2 Z050	4				
. NS	502853	. WASHER LO SPT 6.1x11.8x1.6 N500	1				
. NS	IS-16901A	. SEE INSTRUCTION SHEET	1				
33	066733	. DECAL "VIDEO DISTRIBUTION"	1				
34	901198	DVD PLAYER 12V (VOLVO) VD-404	AR				S
. NS	901265	. REMOTE CONTROL / DVD VOLVO	1				S
. NS	901302	. SENSOR ASSY W/CABLE / DVD REMOTE CONTROL	1				S
34	901339	DVD PLAYER 12V	1				
. NS	901377	. REMOTE CONTROL / DVD R.E.I.	1				
NS	409294	CABLE INTERFACE DVD "VOLVO" to DVD "REI" 4 CONN. to 6 CONN.	1				
35	901190	RADIO AM-FM-CD-CDX / "PRÉVOST" MP3 VR-300	1				
36	506755	VELCRO / HOOK ADHESIF 1" x 75'	AR				
37	506756	VELCRO / LOOP ADHESIF 1" x 75'	AR				
38	901201	RECEIVER WIRELESS MICROPHONE / 16 CHANNEL	1				
39	066804	ADAPTOR AUDIO SIRIUS SH 8C x 2F RCA	1				
. NS	903217	. CONVERTISSOR AUDIO	1				
40	901209	RADIO "PREVOST" AM-FM-CD / "XM" READY (DELPHI)	1				
41	901218	RADIO "PREVOST" AM-FM-CD / "SIRIUS" READY (DELPHI)	1				
42	901190	RADIO AM-FM-CD-CDX / "PRÉVOST" MP3 VR-300	1				
43	901218	RADIO "PREVOST" AM-FM-CD / "SIRIUS" READY (DELPHI)	1				
44	901209	RADIO "PREVOST" AM-FM-CD / "XM" READY (DELPHI)	1				
45	N.P.N.	BOX	1				4
46	901106	. AUDIO FILTER	2				
47	901106	AUDIO FILTER	1				
49	900912	CABLE ASSY / FRONT CAMERA	1				
50	066822	CABLE ASSY / VIDEO & FRONT CAMERA	1				
53	900856	CABLE RCA / 2M/2M / 3'	1				
54	900775	Y RADIO ANTENNA CABLE / TO USE W/2 RADIOS	AR				

From RETROFIT		Date:07/2024	PAGE:Y2-2317-99

VIDEO & AUDIO SYSTEM - INSTALLATION

Item#	Part	Description	XLII 45	XLII MTH40	XLII MTH45	XLII MTH45E	NOTES
55	900774	CABLE, ANTENNA EXTENSION / 12'	AR				
56	901110	CABLE RCA / 2M/2M / 25'	1				
57	900671	ADAPTOR "Y" RCA / 1M/2F / 4"	AR				
58	900845	ENTERTAINER CONTROL MODULE	1				
59	900671	ADAPTOR "Y" RCA / 1M/2F / 4"	AR				
60	066770	. CABLE ASSY / DASH & PARCEL RACK	1				
61	066748	. CABLE POWER AUDIO	1				
62	066731	. WIRING HARNESS DASHBOARD CENTRAL MODULE / MUX	1				
NS	405844	KIT, RETROFIT "VOLVO" SOUND SYSTEM "XL"	1				A B
NS	066746	. CABLE HARNESS / SPEAKER CURBSIDE RR / W/W.C.L. / 7 SP	1				
NS	066744	. CABLE HARNESS / SPEAKER STREETSIDE / 16 SP	1				
NS	066745	. CABLE HARNESS / SPEAKER CURBSIDE FRT / W/W.C.L. / 10	1				
NS	066864	. CABLE POWER AUDIO	1				
75	066796	. RESISTOR 4 OHMS 25W W/CONNECTOR	5				
NS	066704	. CABLE SPEAKER / JCT & LH & RH	1				
NS	319034	. COVER L.H. ASSY / W/LIGHT & VENT HOLE	1				
. NS	313882	. . COVER L.H. / W/VENT HOLE	1				
NS	901175	. CABLE POWER 60'	1				
NS	901176	. CABLE POWER INTERFACE 9'	1				
NS	901190	. RADIO AM-FM-CD-CDX / "PRÉVOST" MP3 VR-300	1				
NS	901192	. CONTROL HEAD / "VOLVO" (VSS-04)	1				
. NS	901266	. . REMOTE CONTROL / CONTROL HEAD VOLVO / VSS04	1				
		WHEN CHANGE VSS04 TO VSS05 YOU NEED CONTROL HEAD 21516503					
		& HARNESS KIT 409439 & NEW RADIO					
		901417P OR 901418P OR 901419P					
82	IS08080	. SOUND SELECTOR REPLACEMENT, VSS04 VS VSS05	1				
. NS	900238	. . CONTROL HEAD / "VOLVO" (VSS-05A)	1				
. . NS	21251311	. . . REMOTE CONTROL / CONTROL HEAD VOLVO / VSS05	1				
. NS	0610388	. . CABLE INTERFACE VSS04 TO VSS05	1				
. NS	IS-08080	. . SEE INSTRUCTION SHEET	1				
82	21516503	. CONTROL HEAD / "VOLVO" (VSS-05)	1				
. NS	21251311	. . REMOTE CONTROL / CONTROL HEAD VOLVO / VSS05	1				
82	901417P	. RADIO "PREVOST" AM/FM/CD & MP3 BLUETOOTH COMPUTERIZ	1				
82	901418P	. RADIO "PREVOST" AM/FM/CD & MP3 BLUETOOTH SIRIUS COMPUTERIZ	1				
82	901419P	. RADIO "PREVOST" AM/FM/CD & MP3 BLUETOOTH & XM COMPUTERIZ	1				
NS	392305	. ADAPTOR RADIO TO STRUCTURE	1				
NS	392312	. PARTIAL STRUCTURE TO FIT "VOLVO" AUDIO SOUND	1				
NS	312596	. COVER R.H. / PLAIN	1				
NS	392304	. PANEL / FRONT INSTRUMENTATION	1				

From RETROFIT		Date:07/2024	PAGE:Y2-2317-99

VIDEO & AUDIO SYSTEM - INSTALLATION

Item#	Part	Description	XLII 45	XLII MTH40	XLII MTH45	XLII MTH45E	NOTES
88	066863	. CABLE GROUND	1				
90	430669	KIT, REPLACEMENT DVD "VOLVO" TO "REI"	1				
. NS	409294	. CABLE INTERFACE DVD "VOLVO" to DVD "REI" 4 CONN. to 6 CONN.	1				
. NS	901436	. DVD PLAYER 12V	1				
. . NS	901264	. . REMOTE CONTROL / DVD REI	1				
. NS	901347	. CABLE ASSY / W/2 BNC FEMALE/ FEMALE 1"	1				
. NS	IS-09048	. SEE INSTRUCTION SHEET	1				
		A) THIS KIT INCLUDE ALL ITEMS LISTED BELOW THIS LINE AND PLATE AUDIO ASSY # 405845 ABOVE					
		B) WITH THIS KIT YOU NEED ALSO READING LIGHT # 830186 OR 330379					
		S) THIS DVD MAY BY REPLACE BY ONE # 901339 AND ONE CABLE # 409294					
		T) FOR SERVICE					
		4) NO PARTS NUMBER					

From Y-7046 To 6-8906		Date:07/2024	PAGE:Y2-2318-00
CLOCK (DIGITAL)			

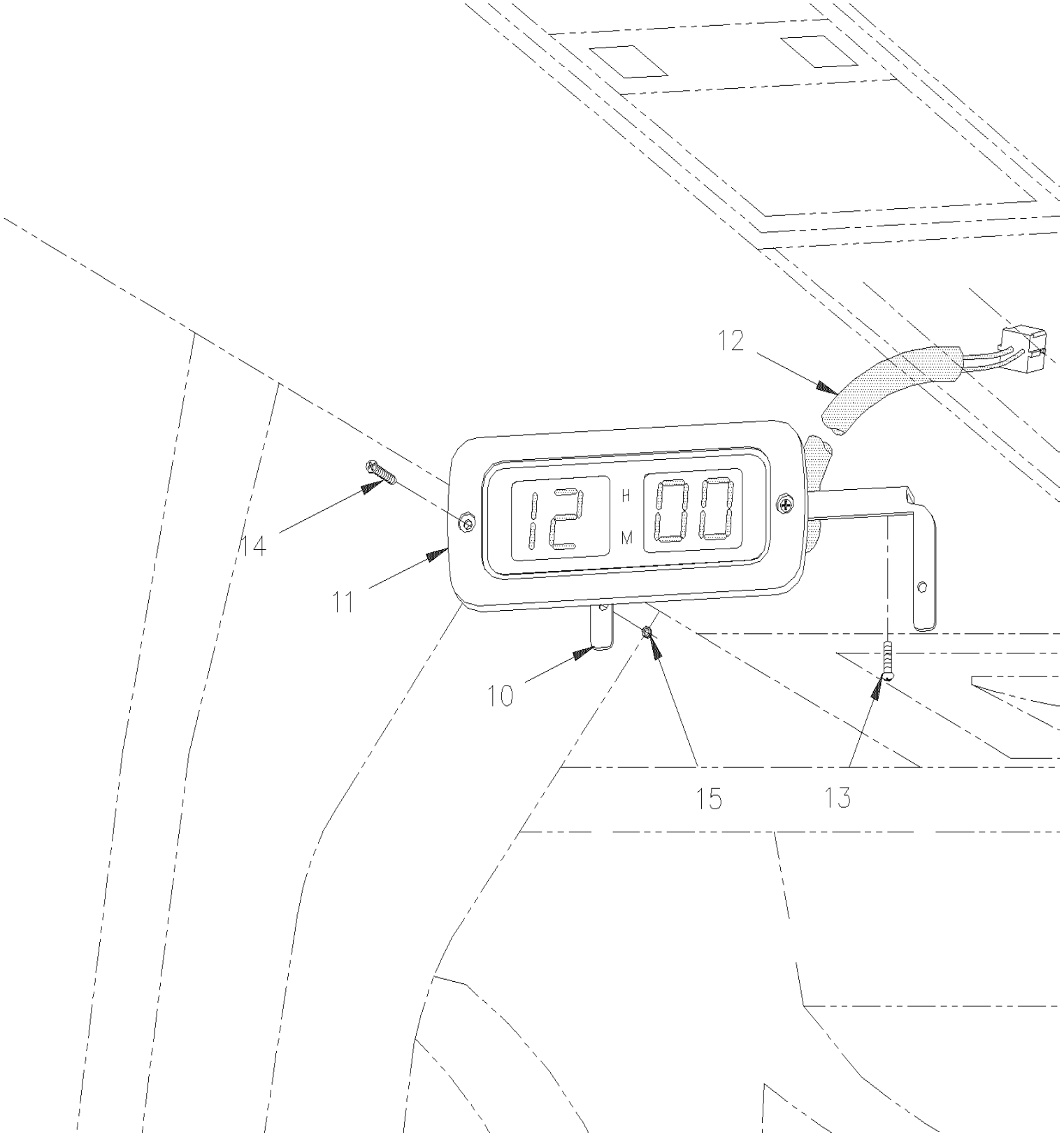

From Y-7046 To 6-8906		Date:07/2024	PAGE:Y2-2318-00

CLOCK (DIGITAL)

Item#	Part	Description	XLII 45	XLII MTH40	XLII MTH45	XLII MTH45E	NOTES
10	404546	SUPPORT	1				
11	404547	DIGITAL CLOCK / 12HRS To 5-8426	1				
11	404551	DIGITAL CLOCK / 24HRS To 5-8426	1				
11	407502	DIGITAL CLOCK / 12/24HRS From 5-8427	1				
NS	900867	. DIGITAL CLOCK To 5-8426	1				
NS	901123	. DIGITAL CLOCK From 5-8427	1				
NS	561476	. CONNECTOR / (.062) / SH 4C / MOLEX 03-06-1044	1				
NS	561478	. SOCKET TERMINAL / 24-18 / MOLEX 02-06-1103	3				
11	562387	CONVOLUTED TUBING / SLIT / BLACK / .250"	AR				
12	064199	CABLE ASSY / CLOCK & FRONT JCT PANEL	1				
13	500409	SCREW TP PAN PH #8x1/2 BK	3				
14	500260	SCREW TC FL PH #8-32x3/4 BK	2				
15	500670	NUT HEX NYRT #8-32 Z050	2				

From Y-7046 To 8-9339		Date:07/2024	PAGE:Y2-2320-00
JACK & FLARE KIT - INSTALLATION			

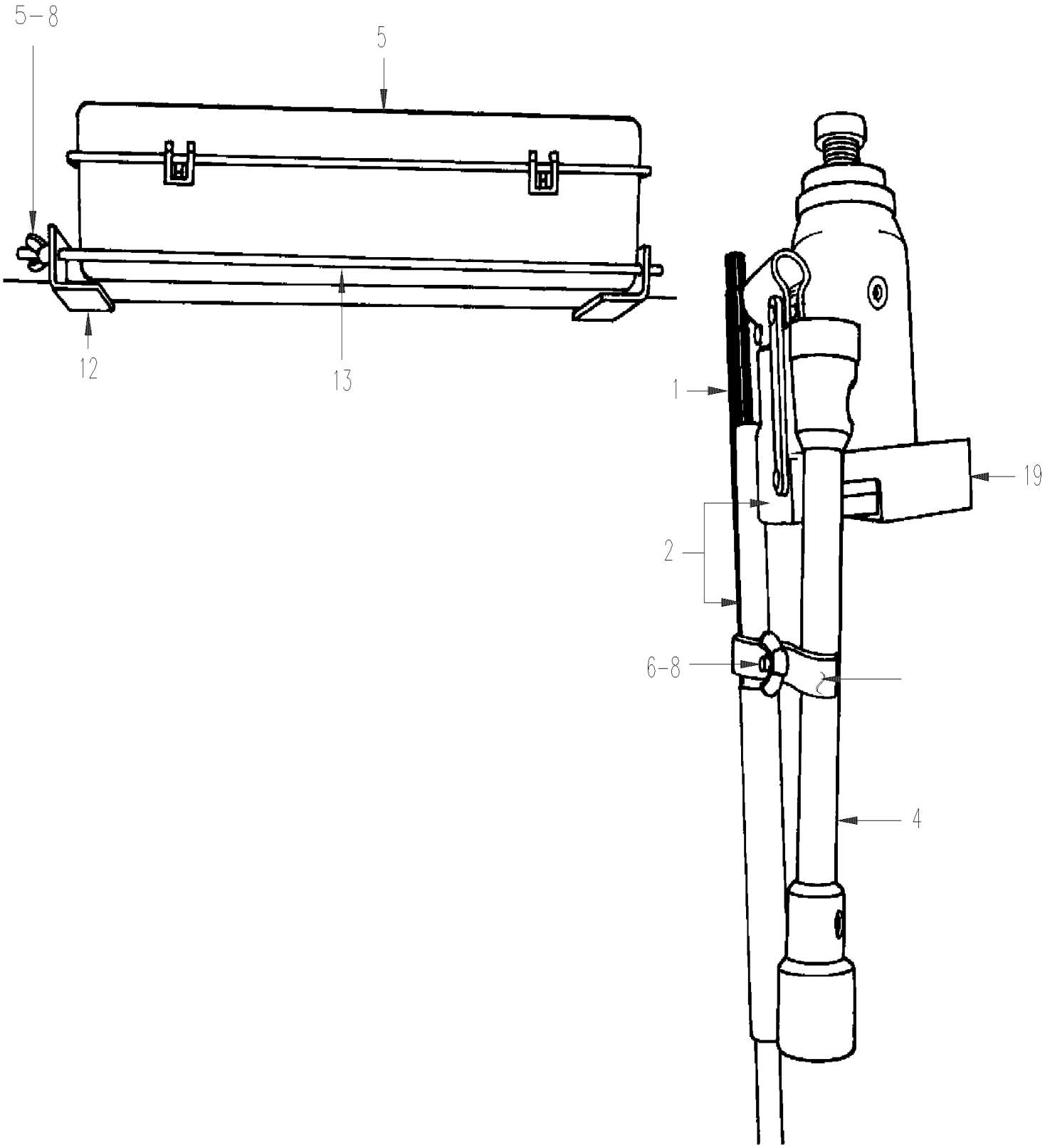

From Y-7046 To 8-9339		Date:07/2024	PAGE:Y2-2320-00
JACK & FLARE KIT - INSTALLATION			

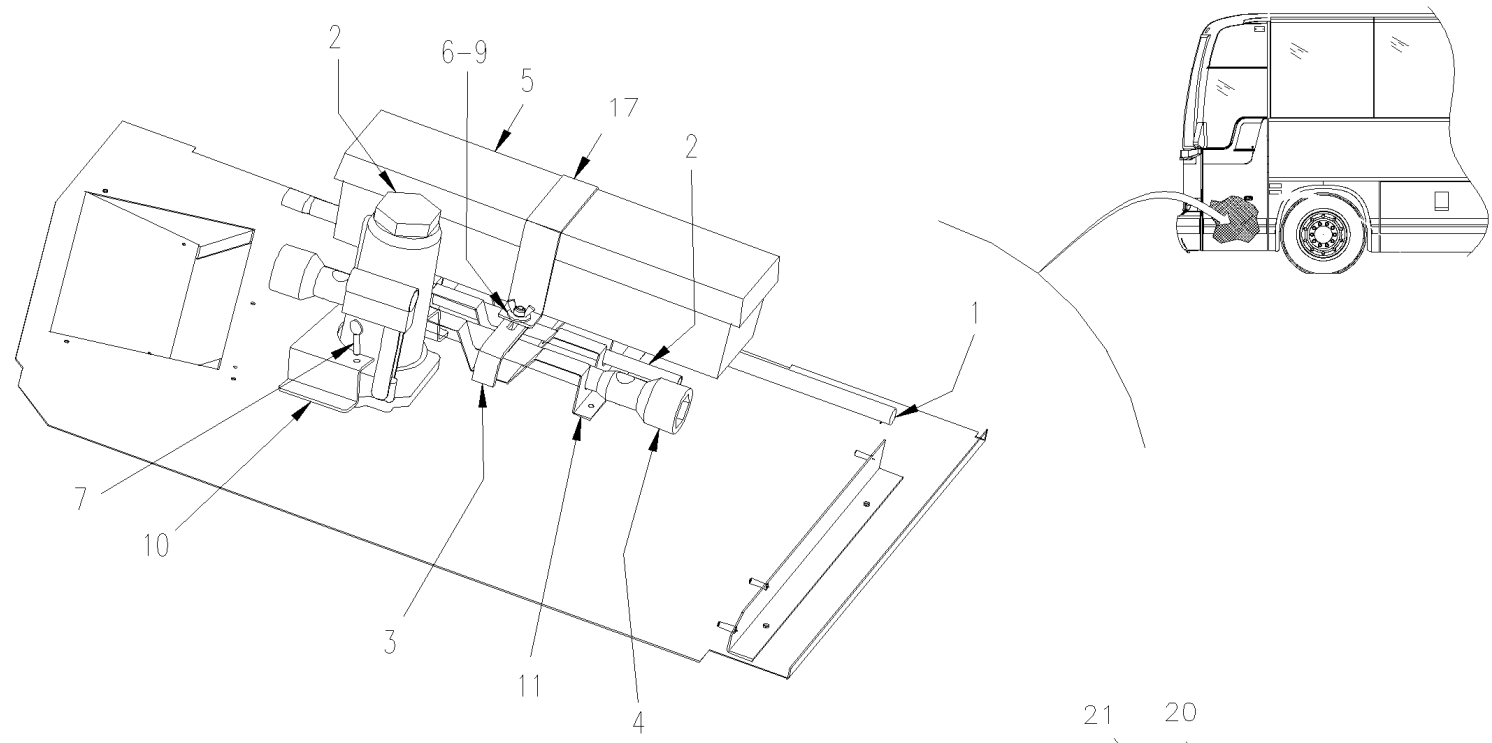

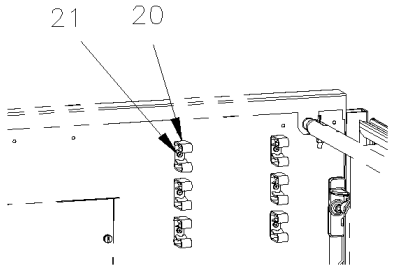

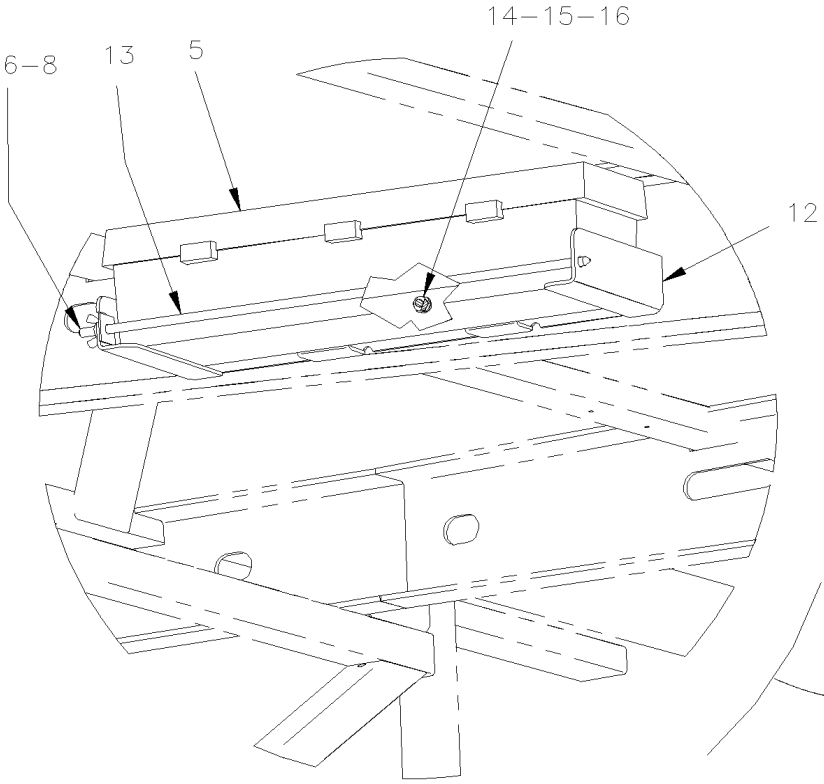

From Y-7046 To 8-9339		Date:07/2024	PAGE:Y2-2320-00

JACK & FLARE KIT - INSTALLATION

Item#	Part	Description	XLII 45	XLII MTH40	XLII MTH45	XLII MTH45E	NOTES
1	690002	HANDLE, W/WRENCH WHEEL NUT	1	1	1	1	
2	505505	JACK, 12TONS	1	1	1	1	
3	410556	KEY (FOR FRONT BUMPER NUT) To 6-8906	1				
. NS	410545	. KEY To 6-8906	1				
. NS	410557	. RUBBER To 6-8906	1				
4	690001	WRENCH, WHEEL NUT 1 1/2" & 13/16 SQUARE	1	1	1	1	
4	690005	WRENCH, WHEEL 33 MM To 6-8906	1				
5	930283	FLARE KIT, TRIANGULAR	1	1	1	1	
5	930442	FLARE KIT, TRIANGULAR	1	1	1	1	S
6	500782	NUT WING 5/16-18 Z050 To 6-8906	1				B
7	5001012	SCREW TH 5/16-18x1 1/2 BZC	2				
8	502584	WASHER LO SERR 8.2x26.3x1.8 Z050	2				
9	502220	WASHER FL .375x1.000x.125 RUB	2				
10	251226	SUPPORT, JACK / WELDED TO STRUCTURE	1				
11	251227	ATTACHMENT / HANDLE & WRENCH	1				
12	211010	SUPPORT, FLARE KIT / BOLTED TO STRUCTURE To 6-8906	1				
12	211220	SUPPORT, FLARE KIT / BOLTED TO STRUCTURE	1				S
13	210280	ROD, RETAINING / FLARE KIT	1	1	1	1	
14	500440	WASHER FL .250x.562x.065 Z050	3				
15	502511	NUT HEX NYRT M6-1.0 Z050	11				
16	500771	NUT HEX 1/4-20 SS	3				
17	407501	STRAP RETAINER SS / FLARE KIT To 6-8906	1				B
19	211525	SUPPORT, JACK / WELDED TO STRUCTURE To 6-8906	1				
19	211528	SUPPORT, JACK / BOLTED TO STRUCTURE		1	1	1	
20	504585	SPRING CLIP 3/4"	6				C
21	500654	SCREW TC BDG PH #8-32x1/2 Z050	6				C
NS	404670	SUPPORT FLARE KIT / 12MM x 123MM To 6-8906	1				A
NS	860489	VELCRO / HOOK BLACK / 3/4" X 75' To 6-8906	AR				A
NS	860490	VELCRO / LOOP BLACK / 3/4" X 75' To 6-8906	AR				A
NS	5001454	SCREW MA BDG PH #4-40x1/2 SS To 6-8906	4				A
NS	502520	NUT HEX #4-40 Z050 To 6-8906	4				A
NS	500581	WASHER LO SPT .141x.250x.031 SS To 6-8906	4				A
NS	500437	WASHER FL .125x.375x.040 Z050 To 6-8906	4				A
24	210275	BRACKET, RETAINING / HANDLE & WRENCH	1	1	1	1	
NS	210264	SUPPORT / (WELDED TO STRUCTURE) To 6-8906	1				
		A) COACH WITH FLARE KIT FIXED EVAPORATOR WALL					
		B) COACH WITH FLARE KIT FIXED WITH SS STRAP					
		C) COACH WITH FLARE KIT & TORCH					
		S) SERVICE					

From Y-7046 To 8-9339		Date:07/2024	PAGE:Y2-2320-30
EXTINGUISHER - INSTALLATION			

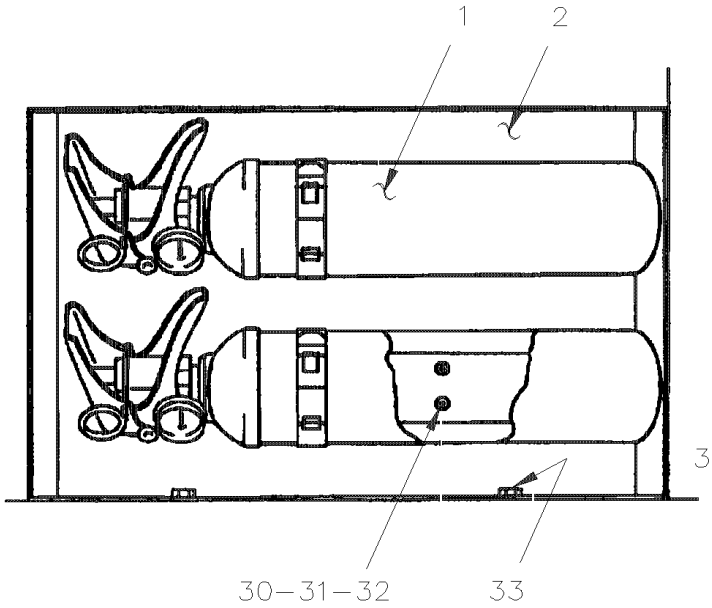

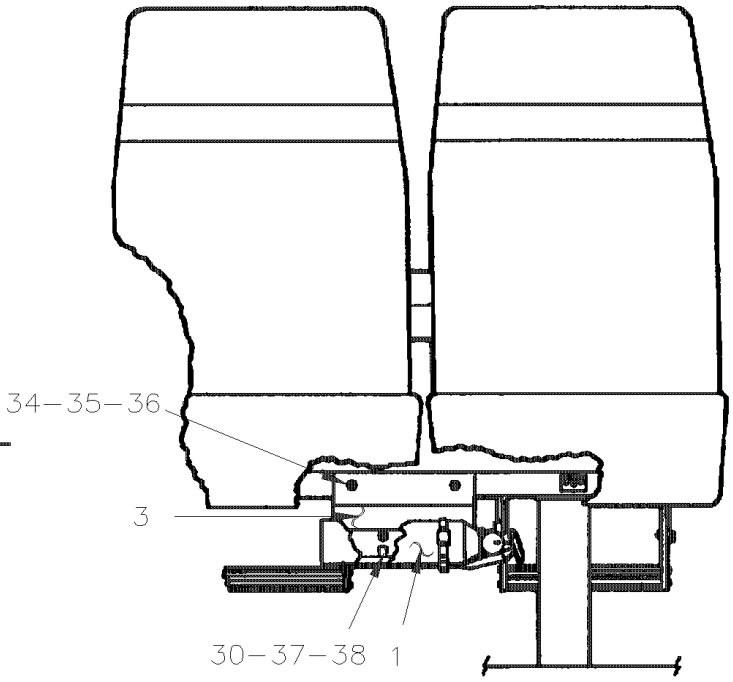

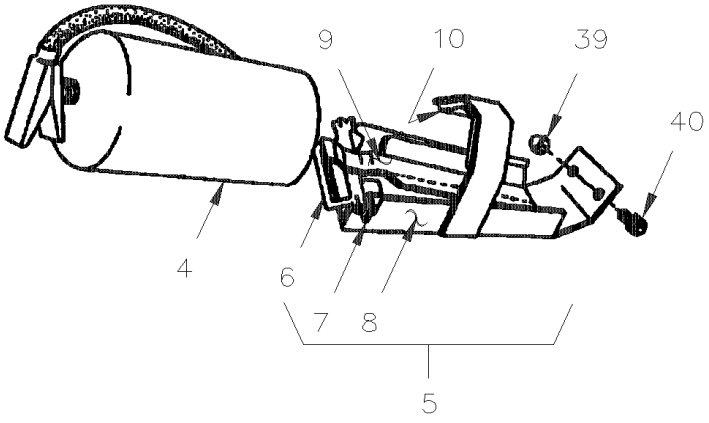

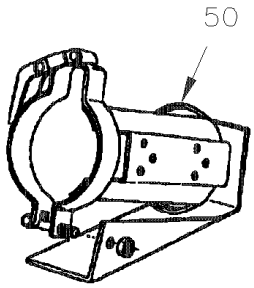

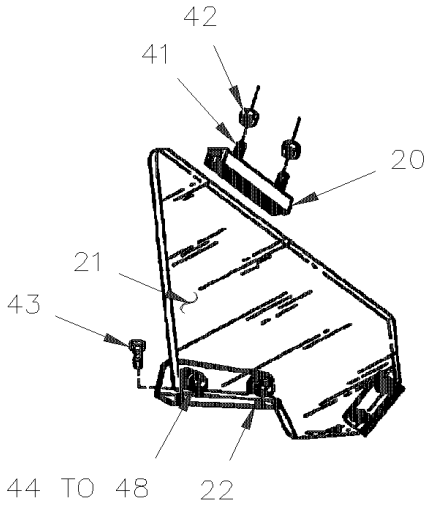

From Y-7046 To 8-9339		Date:07/2024	PAGE:Y2-2320-30

EXTINGUISHER - INSTALLATION

Item#	Part	Description	XLII 45	XLII MTH40	XLII MTH45	XLII MTH45E	NOTES
1	900702	EXTINGUISHER 2.5 LBS / W/PLASTIC HANDLE		2	2	2	
1	901001	EXTINGUISHER 2.5 LBS / W/METAL HANDLE	2				
2	324391	SUPPORT ASSY / EXTINGUISHER		1	1	1	
3	324349	SUPPORT ASSY / EXTINGUISHER		2	2	2	
NS	470949	SPACER RUBBER 3/4" O.D. / S.Q.	2				
NS	900651	EXTINGUISHER 20 LBS	1				
NS	403465	SUPPORT / FOR EXTINGUISHER 20 LBS / UNDER SEAT	1				
4	900449	EXTINGUISHER 10 LBS	1				
. NS	900618	. SUPPORT	1				
4	900618	. SUPPORT	1				
5	403581	SUPPORT ASSY / 10 LBS INTINGUISHER / IN PARCEL RACK	1				
6	402575	. HANDLE ASSY / TILTING SUPPORT	1				
7	402571	. CLIP, SPRING	2				
8	402569	. BRACKET ASSY / TILTING SUPPORT	1				
9	402567	. SUPPORT, TILTING	1				
9	505188	. PIN, SPRING 1/4" X 7/8"	1				
9	470949	. SPACER RUBBER 3/4" O.D. / S.Q.	2				
10	506235	. TAPE RUB ADH1 PVC.NITRIL 1/2" x 1" x 15' / BLACK 1210	AR				
20	402555	FIXTURE, UPPER	2				
21	404645	GUARD, PLEXIGLASS	1				
22	404644	FIXTURE, LOWER	1				
30	500572	SCREW MA TR PH #10-24x1/2 SS BK	8				
31	500470	WASHER LO SPT .193x.334x.047 Z050	8				
32	500786	NUT HEX #10-24 Z050	8				
33	500535	SCREW TP CAP HEX #14x3/4 Z050	4				
34	500559	SCREW MA TR PH 1/4-20x1 1/2 SS EMN	4				
35	500468	WASHER FL .281x1.250x.065 Z050	4				
36	500770	NUT HEX STO 1/4-20 Z050	4				
37	500964	WASHER FL .203x.500x.047 Z050	8				
38	500767	NUT HEX #10-24 Z050	8				
39	500772	NUT HEX CAP 1/4-20 NP	2				
40	500394	SCREW MA TR SLT 1/4-20x1/2 Z050	2				
41	500510	SCREW MA BDG PH #10-32x3/4 SS EMN	4				
42	500519	NUT WELL #10-32x.518	4				
43	500657	SCREW TC TR PH #10-24x1/2 Z050	2				
44	500607	SCREW MA TR PH #10-24x1 SS	4				
45	500891	NUT HEX CAP #10-24 Z050	6				
46	900251	BUSHING, RUBBER	8				
47	400380	SPACER 5/16 O.D. x 17/32" x 18GA	4				
48	500989	WASHER FL .219x.875x.062 Z050	4				
50	401821	SUPPORT / FOR EXTINGUISHER 10 LBS	AR				
NS	323290	DECAL / FIRE EXTINGUISHER	1				

From Y-7046 To 8-9339		Date:07/2024	PAGE:Y2-2320-30

EXTINGUISHER - INSTALLATION

Item#	Part	Description	XLII 45	XLII MTH40	XLII MTH45	XLII MTH45E	NOTES
50	407693	DECAL "FIRE EXTINGUISHER INSIDE" GREY	1				
NS	402763	DECAL / UNDER SEAT EXTINGUISHER	1				
50	327523	DECAL / FIRE EXTINGUISHER / (PARCEL RACK DOOR	1				
60	405273	COVER, EXTINGUISHER 10 LBS	1				
61	405274	BASE SUPPORT EXTINGUISHER 10LBS	1				
62	405276	CORD, RUBBER 370MM	1				
. NS	506066	. CORD, RUBBER EXTRUSION NEO 7/16" O.D. / C.T.L.	AR				
63	504452	CLAMP "E-Z CLIP" / "TUBE-O" / 7/16" / HC9-7	3				
64	5001458	WASHER FL 12.0x24.0x2.5 NYL	2				
65	506466	TAPE RUB ADH1 CC POL 1/16" x 1 1/2" x 100 / GREY 2520	AR				
66	504637	CABLE TIE / 3/16" x 13"	AR				
67	502706	SCREW TP PAN PH #14x1 SS	4				
68	500411	WASHER FL .260x.697x.050 SS	4				

From Y-7046 To 6-8906		Date:07/2024	PAGE:Y2-2320-40
FIRST AID KIT & AXE - INSTALLATION			

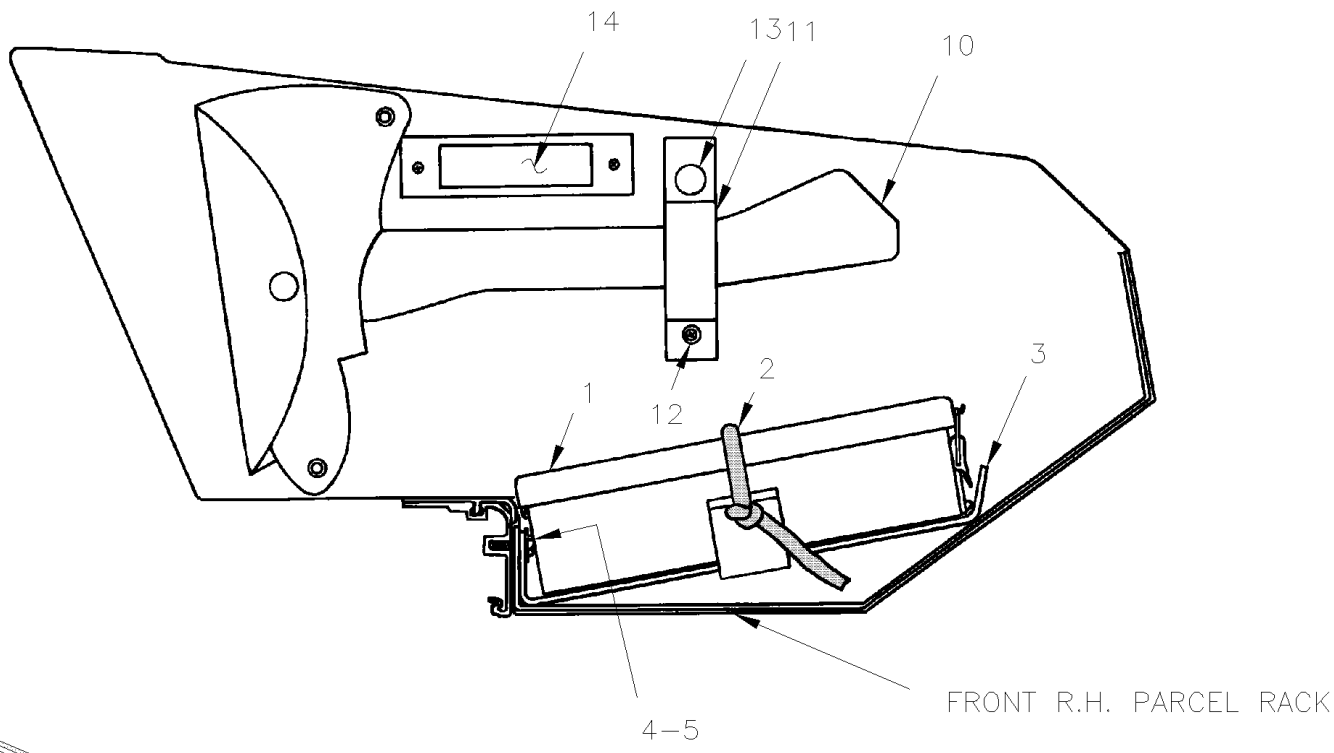

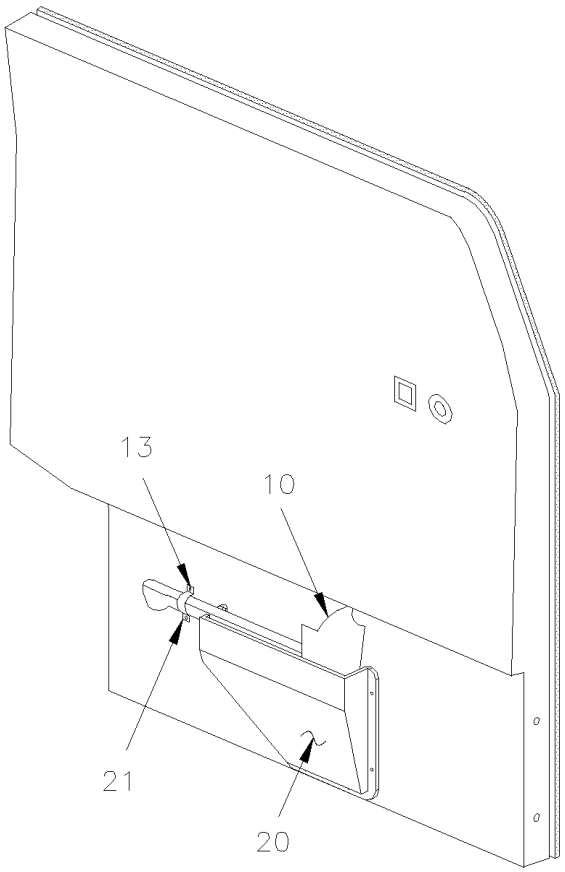

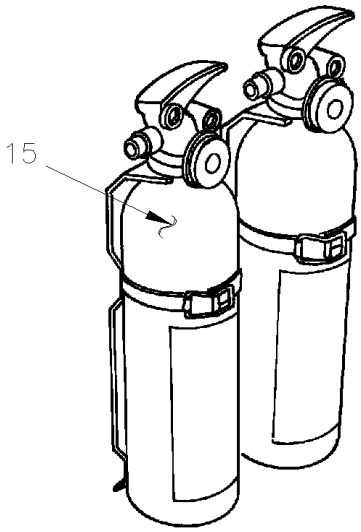

From Y-7046 To 6-8906		Date:07/2024	PAGE:Y2-2320-40

FIRST AID KIT & AXE - INSTALLATION

Item#	Part	Description	XLII 45	XLII MTH40	XLII MTH45	XLII MTH45E	NOTES
1	900289	KIT, FIRST AID (LARGE) / MODEL #36	1				
1	900767	KIT, FIRST AID (EXTRA LARGE) / W / W.C.L.	1				
1	900990	KIT, FIRST AID / SASKATCHEWAN MODEL From Y-7155	1				
1	900991	KIT, FIRST AID / MANITOBA & N-BRUNSWICK MODEL From Y-7155	1				
1	900992	KIT, FIRST AID / NOVA-SCOTIA MODEL From Y-7155	1				
1	900993	KIT, FIRST AID / ALBERTA MODEL From Y-7155	1				
1	900994	KIT, FIRST AID / NEWFUNLAND MODEL From Y-7155	1				
1	900995	KIT, FIRST AID / QUEBEC & BRI. COLUMBIA MODEL From Y-7155	1				
1	900996	KIT, FIRST AID / ONTARIO, I.P.E. & USA MODEL From Y-7155	1				
NS	323292	DECAL / FIRST AID	1				
NS	327524	DECAL / FIRST AID / (PARCEL RACK DOOR)	1				
1	195889	KIT "EMERGENCY CLEANING" BIOHAZARD CASE OF 25	AR				
1	19503251	KIT "EMERGENCY CLEANING" STANDARD	AR				
2	506621	STRAP, RUBBER / S.L.	AR				
NS	504452	CLAMP "E-Z CLIP" / "TUBE-O" / 7/16" / HC9-7	2				
NS	502525	WASHER FL .484x.750x.031 Z050	2				
3	312806	SUPPORT ASSY / W/FIRST AID KIT (LARGE) / 205MM	1				
3	312807	SUPPORT ASSY / W/FIRST AID KIT (SMALL) / 139MM	1				
4	500841	SCREW TP PAN PH #14x3/4 Z050	4				
5	500473	WASHER LO SPT .262x.489x.062 Z050	4				
10	900046	FIRE AXE To 5-8520	1				
10	901132	FIRE AXE From 5-8521	1				
10	901134	FIRE AXE CASE LEATHER From 5-8521	1				
NS	323291	DECAL / AXE	1				
11	403582	STRAP / TO FIX AXE	1				
NS	506236	TAPE RUB ADH1 CC POL 1/16" x 1/2" x 100' / GREY 2520	AR				
12	504106	RIVET POP DOME OE 1/8x1/4 AL	1				
NS	500157	WASHER FL .125x.375x.032 SS	3				
13	504003	FASTENER RIVET BASE	3				
NS	504107	RIVET POP DOME OE 1/8x5/16 AL	1				
14	**Y2-0655-00**	**INTERIOR LIGHTING**					
15	**Y2-2320-30**	**EXTINGUISHER - INSTALLATION**					
20	405180	SUPPORT ASSY W/BUMPER	1				
20	405115	. SUPPORT / PLASTIC	1				A
20	405179	. PROTECTOR, BOTTOM	1				
NS	500333	. SCREW TP OV PH #6x3/4 BK	1				
NS	500345	. WASHER FN CKF .187x.500x.090 BR BK	1				
21	404922	STRAP / TO FIX AXE	1				A
		A) COACH WITH AXE INSTALLATION REAR DRIVER'S SEAT					

From Y-7046 To 6-8906		Date:07/2024	PAGE:Y2-2325-00
LAVATORY - ACCESSORIES			

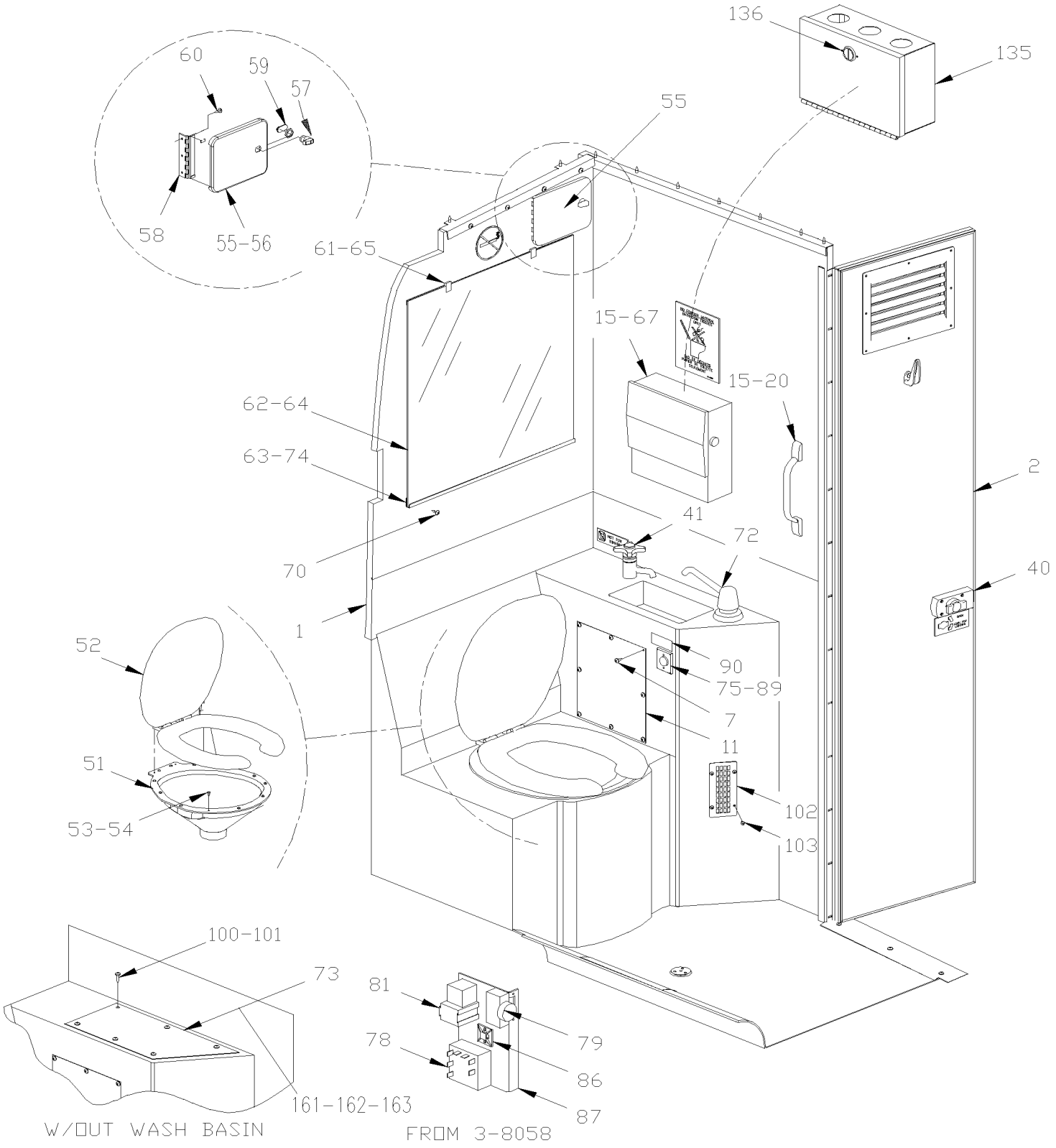

From Y-7046 To 6-8906		Date:07/2024	PAGE:Y2-2325-00
LAVATORY - ACCESSORIES			

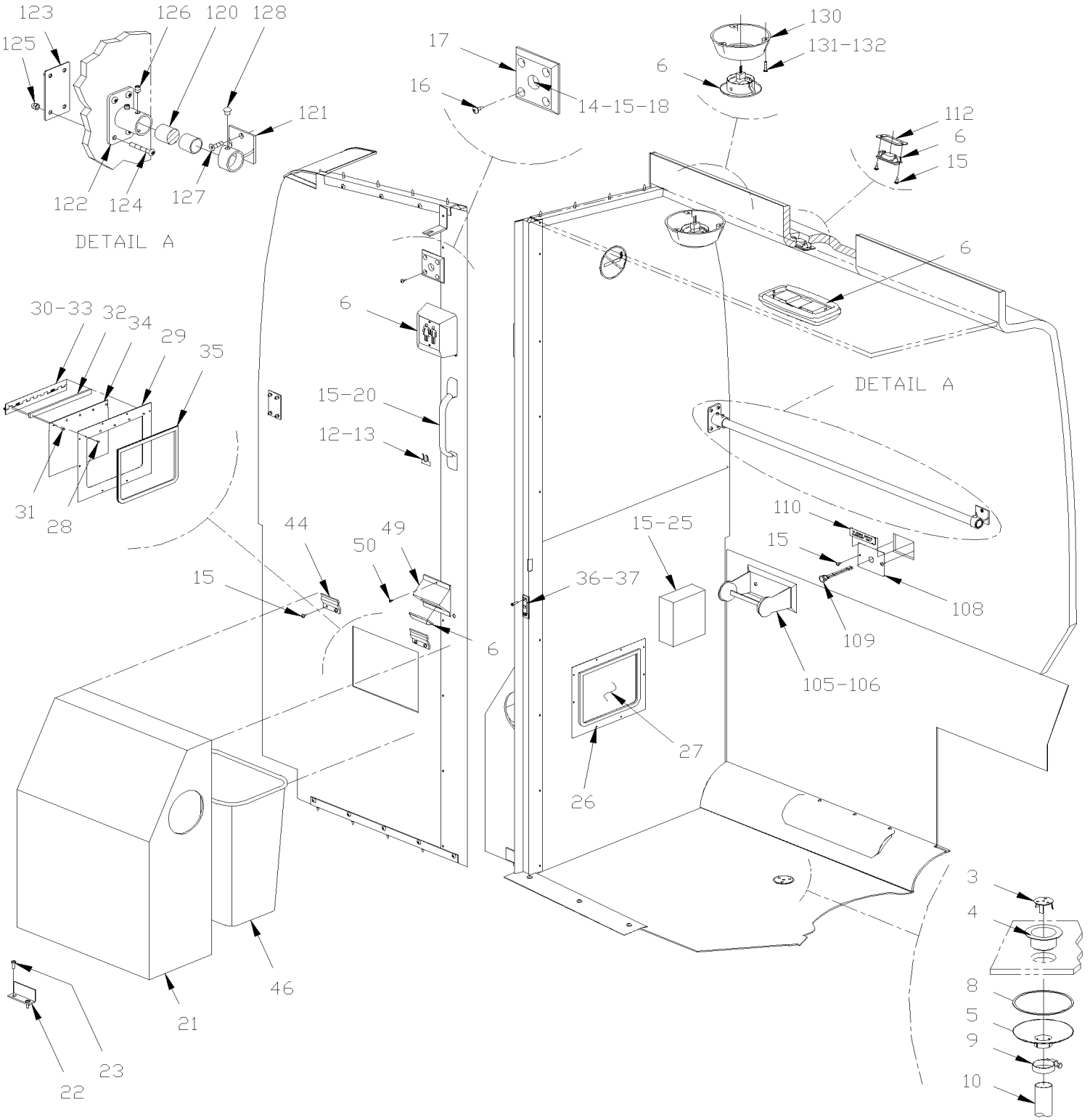

From Y-7046 To 6-8906		Date:07/2024	PAGE:Y2-2325-00

LAVATORY - ACCESSORIES

Item#	Part	Description	XLII 45	XLII MTH40	XLII MTH45	XLII MTH45E	NOTES
1	404923	LAVATORY, FIBERGLASS To 3-8057	1				
1	405412	LAVATORY, FIBERGLASS From 3-8058	1				
2	**Y2-2328-00**	**LAVATORY WALL - INSTALLATION**					
3	401927	GRILLE ASSY, STRAINER	1				
4	900219	STRAINER ASSY, FLOOR	1				
NS	680025	CAULKING STRIP 3/16" O.D. X 14'	AR				
5	900861	PIGTAIL / DRAIN TUBE	1				
6	**Y2-0655-00**	**INTERIOR LIGHTING**					
7	500583	SCREW TP PAN PH #6x1/2 Z050	8				
8	401737	SEAL PLASTIC 1 11/16" I.D.	1				
9	504023	HOSE CLAMP / 1"5/16-2"1/4 SS / HS-28	1				
10	590109	DRAIN BOOT 1" I.D. X 5" / AS SHOWN	1				
11	400807	PLATE, CLOSING	1				
12	500417	SCREW TP PAN PH #6x3/8 Z050	2				
13	900859	BRACKET, MOUNTING / MICROPHONE	1				
14	404226	OUTLET, MICROPHONE / 12" W/CONNECTOR	1				
NS	562507	CONNECTOR / (.093) / PH 4C / MOLEX 03-09-2049	1				
15	500641	SCREW TP PAN PH #8x3/4 Z050	AR				
16	500663	SCREW MA FL PH #6-32x3/4 ZP	4				
17	400686	ADAPTOR, PLATE CLEAR PLASTIC 3"X3" / TO USE W/OUTLET ON PARCEL RACK	1				
18	500552	SCREW TP OV PH #6x3/4 Z050	AR				
20	900308	HANDLE / LONG To 1-7715	1				
20	901047	HANDLE / SHORT From 1-7716	1				
21	404450	COVER, BASKET	1				
22	400860	ANGLE / TO FIX DUSTBIN TO FLOOR / 3"	1				
23	500841	SCREW TP PAN PH #14x3/4 Z050	2				
25	900083	DISPENSER / TOILET PAPER / (CHROME)	1				
NS	900085	PAPER, TOILET / BOX OF 96 PACK	AR				
26	500640	SCREW TP PAN PH #6x3/4 Z050	12				
27	400768	TRAP ASSY, ACCESS	1				
28	504339	. RIVET POP DOME OE 1/8x3/8 SS	5				
29	400742	. FRAME / WASTE CONTAINER TRAP	1				
30	400739	. SPRING, TORSION / .375 I.D. x .437 x .032	2				
31	504104	. RIVET POP DOME OE 1/8x1/8 SS	5				
32	400740	. SPACER / HINGE	1				
33	400741	. HINGE / WASTE CONTAINER ACCESS TRAP	1				
34	400743	. TRAP, ACCESS / WASTE CONTAINER	1				
35	509558	. WEATHERSEAL SNAP-ON 1/8" / SINGLE LIP / WH / C.T.L.	AR				
NS	404634	CLOSING PLATE / TO USE W/O WASTE CONTAINER	1				
36	400706	CATCH PLATE 7/8" X 4 1/4" To 2-7922	1				
36	405295	CATCH PLATE From 2-7923	1				
37	500354	SCREW MA FL SLT #10-24x1/2 ZP To 2-7922	2				

From Y-7046 To 6-8906		Date:07/2024	PAGE:Y2-2325-00

LAVATORY - ACCESSORIES

Item#	Part	Description	XLII 45	XLII MTH40	XLII MTH45	XLII MTH45E	NOTES
37	500353	SCREW TP FL PH #8x3/4 BK From 2-7923	2				
37	500786	NUT HEX #10-24 Z050 To 2-7922	2				
40	**Y2-2329-00**	**LAVATORY DOOR LOCK & SWITCH**					
41	**Y2-2330-00**	**WATER & SUMP TANK - INSTALLATION**					
44	404459	BRACKET, RETAINING / TO FIX CONTAINER TO WALL	2				
46	900605	TRASH CAN / BLACK PLASTIC	1				
49	327378	LAMP SUPPORT	1				
50	500814	SCREW TP BDG PH #6x3/4 BK	2				
51	405064	BOWL ASSY, TOILET / GREY SS	1				
. NS	900759	. SPRING / TRAP	1				
. NS	900760	. TRAP	1				
52	900338	SEAT & COVER ASSY, TOILET / "BEMIS"	1				
NS	504427	NUT WELL 1/4-20	2				
NS	500610	SCREW MA RND PH 1/4x1 3/4 SS	2				
53	500574	SCREW MA TR PH #10-24x1 1/4 SS	12				
54	500888	NUT AN JK #10-24	12				
55	404482	ACCES DOOR ASSY To 2-7922	1				K
55	405366	ACCES DOOR ASSY / PLASTIC GREY From 2-7923	1				
56	405364	. ACCES DOOR / PLASTIC GREY From 2-7923	1				
57	780538	. LOCK From 2-7923	1				
. NS	780539	. . KEY / (CH751) From 2-7923	1				
58	405365	. HINGE From 2-7923	1				
58	506785	. TAPE RUB ADH2 CC POL 1/16" X 1/4" X 200' / BLACK I1C-N-A From 2-7923	AR				
NS	682462	. ADHESIVE SIKA #252 / BLACK / 310ml CARTRIDGE From 2-7923	AR				
59	288755	. PIVOT LOCK ACTUATOR 33.5MM From 2-7923	1				
60	5001155	SCREW TP PAN PH #8X3/4 N050 To 2-7922	8				
60	500120	SCREW TP BDG PH #6x1/2 SS From 2-7923	3				
61	500495	SCREW TP PAN PH #6x1 Z050	4				
62	506071	TAPE RUB ADH1 CC POL 1/8" x 1/2" x 50' / GREY 2520X	AR				
62	506236	TAPE RUB ADH1 CC POL 1/16" x 1/2" x 100' / GREY 2520	AR				
63	401134	MOULDING, RETAINING / MIRROR	1				
64	402398	MIRROR ASSY / REAR WALL	1				
65	504049	CLIP, RETAINING / MIRROR	4				
67	900327	DISPENSER / PAPER TOWELS	1				
. NS	900494	. KEY, PAPER BOX	1				
. NS	901290	. LOCK, PAPER BOX	1				
NS	900328	TOWEL, PAPER	AR				
70	500614	SCREW TP FL PH #6x3/4 Z050	4				
72	900084	DISPENSER / SOAP	1				
NS	19501055	SOAP BASE ANGLED COUNTER MOUNT ROUND 2" O.D. / WHITE	AR				
NS	19503252	SOAP BASE ANGLED COUNTER MOUNT ROUND 2" O.D. / BLACK	AR				
NS	19501054	SOAP BASE 12° ANGLED COUNTER MOUNT ROUND 2" 5/8" / BLACK	AR				

From Y-7046 To 6-8906		Date:07/2024	PAGE:Y2-2325-00

LAVATORY - ACCESSORIES

Item#	Part	Description	XLII 45	XLII MTH40	XLII MTH45	XLII MTH45E	NOTES
NS	19503186	HAND SANITIZER WATERLESS ALCOHOLIC SCREWABLE BOTTLE	AR				
NS	19503185	HAND SANITIZER WATERLESS NON-ALCOHOLIC SCREWABLE BOTTLE	AR				
NS	19503187	HAND & FACE REFRESHER TOWELLETTES	AR				
73	402002	PLATE COVERING, WASHBASIN FORMICA	1				
74	500614	SCREW TP FL PH #6x3/4 Z050	4				
75	900349	PUSH BUTTON, OPERATOR To 3-8057	1				
NS	900348	SWITCH, TIMER To 3-8057	1				A
NS	900350	BRACKET, MOUNTING To 3-8057	1				
NS	065237	CABLE ASSY / TIMER FLUSH PUMP To 3-8020	1				
NS	065470	CABLE ASSY / TIMER FLUSH PUMP From 3-8021 To 3-8057	1				
75	382030	FLUSH PUMP SWITCH ASSY From 3-8058	1				
78	563327	. TIME DELAY OFF From 3-8058	1				
NS	065830	. RESISTOR ASSY 1M OHMS 1/2 W From 3-8058	1				
79	563326	. PUSH BUTTON / OPERATOR / BLACK From 3-8058	1				
81	561707	. RELAY 24V S.P.D.T. W/RESISTOR / From 3-8058 To 5-8577	1				
81	563332	. RELAY 24V S.P.D.T. W/RESISTOR / "VOLVO" (20374662) From 5-8578	1				
NS	502691	. WASHER LO SPT 3.6x6.7x0.8 Z050 From 3-8058	4				
NS	502630	. WASHER FL .156x.375x.049 Z050 From 3-8058	1				
NS	500852	. SCREW TP BDG PH #6x3/8 N500 From 3-8058	1				
NS	5001085	. SCREW TP PAN PH #6x1 1/4 Z050 From 3-8058	1				
86	562679	. 4 WAY ADH. BACKED MOUNTS 1.000 x 1.000 x .160 From 3-8058	1				
NS	504273	. CABLE TIE / 1/8" X 3"1/2 From 3-8058	1				
87	382031	. SUPPORT From 3-8058	1				
NS	065813	. CABLE ASSY / TIMER FLUSH PUMP From 3-8058	1				
NS	504226	SNAP BUSHING / .391x.578x.406	1				
89	403040	PROTECTOR / EMERGENCY SWITCH / PLASTIC GREY / 44MM X 54MM From 3-8058	1				
89	500148	SCREW MA RND PH #6-32x1/2 SS From 3-8058	1				
89	500120	SCREW TP BDG PH #6x1/2 SS From 3-8058	2				
89	502691	WASHER LO SPT 3.6x6.7x0.8 Z050 From 3-8058	2				
90	900351	PLATE, ENGRAVED / "TO FLUSH..." BILINGUAL To 3-8057	1				
90	402744	DECAL / LAVATORY PUMP FLUSH / ENGLISH From 3-8058	1				
90	405414	DECAL / "FLUSH" / ENGLISH & FRANCAIS From 3-8058	1				
100	500465	WASHER FN CKF .278x.729x.119 SS	6				
101	500552	SCREW TP OV PH #6x3/4 Z050	6				
102	404103	GRILLE 160MM X 70MM SS To 5-8512	1				
102	405700	GRILLE 160MM X 70MM SS From 5-8513	1				
103	500638	SCREW TP PAN PH #8x1/2 Z050	4				
105	900656	DISPENSER / TOILET PAPER ASSY (TO USE W/STD) ROLL)	1				
NS	900657	PAPER, TOILET / ROLL S.Q.	AR				
106	500642	SCREW TP PAN PH #10x3/4 Z050	2				
108	325061	PLATE / SS / SUPPORT / EMERGENCY SWITCH (2" X 3")	1				
109	401896	KNOB EMERGENCY To 4-8216	1				

From Y-7046 To 6-8906		Date:07/2024	PAGE:Y2-2325-00

LAVATORY - ACCESSORIES

Item#	Part	Description	XLII 45	XLII MTH40	XLII MTH45	XLII MTH45E	NOTES
109	561124	. SWITCH / S.P.S.T. / N.O. / RED PUSH BUTTON To 4-8216	1				
109	561676	BUTTON / EMERGENCY From 4-8217	1				
110	325062	DECAL / "TO SIGNAL DRIVER..." / BILINGUAL To 4-8216	1				
110	405452	DECAL / "EMERGENCY CALL" / ENGLISH & FRANCAIS From 4-8217	1				
110	325063	DECAL / "TO SIGNAL DRIVER EMERGENCY" To 4-8216	1				
110	402745	DECAL / "EMERGENCY CALL" / ENGLISH From 4-8217	1				
112	324944	PLATE To 5-8592	1				
120	403697	TUBE 956MM	1				
121	900334	BRACKET / TO FIX GRAB HANDLE	1				
122	900331	BRACKET, MOUNTING / FRONT WALL HANDRAIL TUBE	1				
123	403538	PLATE, FIXTURE / INTERIOR HANDRAIL	1				
124	5001071	SCREW MA OV PH #10-32x1 1/2 Z050	4				
125	500995	NUT HEX CAP #10-32 Z050	4				
126	500870	SCREW SET HEXS CUP 1/4-28x3/16	2				
127	500616	SCREW TP FL PH #10x3/4 Z050	2				
128	504340	RIVET POP DOME OE 1/8x3/16 SS	1				
130	405244	LAMP SUPPORT / LAVATORY To 2-7892	1				
130	405371	LAMP SUPPORT / LAVATORY GREY PLATINE From 2-7893	1				
131	500564	SCREW MA RND PH #8-32x3/4 Z050 From 2-7923	3				
132	500678	NUT WELL #8-32x.450 From 2-7923	3				
135	404999	DISPENSER SS / WET TOWELS	1				
135	402026	. BOX	1				
136	900447	. LOCK To 2-7726	1				
136	900659	. . KEY To 2-7726	1				
136	901051	. LOCK From 2-7727	1				
136	N.S.S.	. . KEY From 2-7727	1				1
NS	500525	. SCREW MA RND SLT #5-40x1/2 SS	2				
NS	500555	. NUT HEX #5-40 SS	2				
NS	502649	. WASHER LO EXT .141x.320x.022 Z050	2				
NS	502556	. WASHER FL 4.3x9.0x0.8 SS	4				
NS	900329	CHEMICAL PACK / "INCA GOLD" / S.Q.	AR				
		. . . . NEXT PACKS ARE NO-FORMALDEHYDE					
NS	900654	CHEMICAL PACK / "INCA" FORMULE 104 / S.Q.	AR				
NS	900655	CHEMICAL PACK / "TIMSEN-AIR" / (BOX OF 960)	AR				
NS	403678	CHEMICAL PACK / "TIMSEN-AIR" / (BOX OF 40)	AR				
NS	900893	CHEMICAL PACK / "CELESTE INDUSTRIE" / S.Q.	AR				
NS	900894	CHEMICAL PACK / "CELESTE INDUSTRIE" / (BOX OF 100)	AR				
NS	065896	KIT, RETROFIT / FLUSH PUMP W/1 SWITCH To 3-8058	1				

From Y-7046 To 6-8906		Date:07/2024	PAGE:Y2-2325-00

LAVATORY - ACCESSORIES

Item#	Part	Description	XLII 45	XLII MTH40	XLII MTH45	XLII MTH45E	NOTES
. NS	IS-02112	. SEE INSTRUCTION SHEET To 3-8058	1				
NS	065898	KIT, RETROFIT / FLUSH PUMP W/2 SWITCH / SERIE "XL" To 3-8058	1				
. NS	IS-02112	. SEE INSTRUCTION SHEET To 3-8058	1				
NS	405368	KIT, CLEANING DOOR LAVATORY To 2-7923	1				
. NS	IS-02026	. SEE INSTRUCTION SHEET To 2-7923	1				
161	405303	DISPENSER PLASTIC / WET TOWELS	1				
. NS	780538	. LOCK	1				
. . NS	780539	. . KEY / (CH751)	1				
162	500463	WASHER FN CKF .187x.500x.090 BR Z050	4				
163	500356	WASHER LO SERR 6.1x16.0x0.9 N500	4				
		A) THIS TIMER & SUPPORT ARE SUPPERSEEDED BY KIT#065896 FOR VEHICULE EQUIPPED WITH ONE INSIDE OPERATING SWITCH OR BY KIT #065898 FOR VEHICULE EQUIPPED WITH EXTERIOR AUXILIARY SWITCH IN REAR ENGINE COMPARTMENT					
		K) THIS PART IS SUPERSEEDED BY KIT #405368					
		1) NOT SOLD SEPARATELY					

From Y-7046 To 6-8906		Date:07/2024	PAGE:Y2-2326-00
TOILET PUMP ASSY			

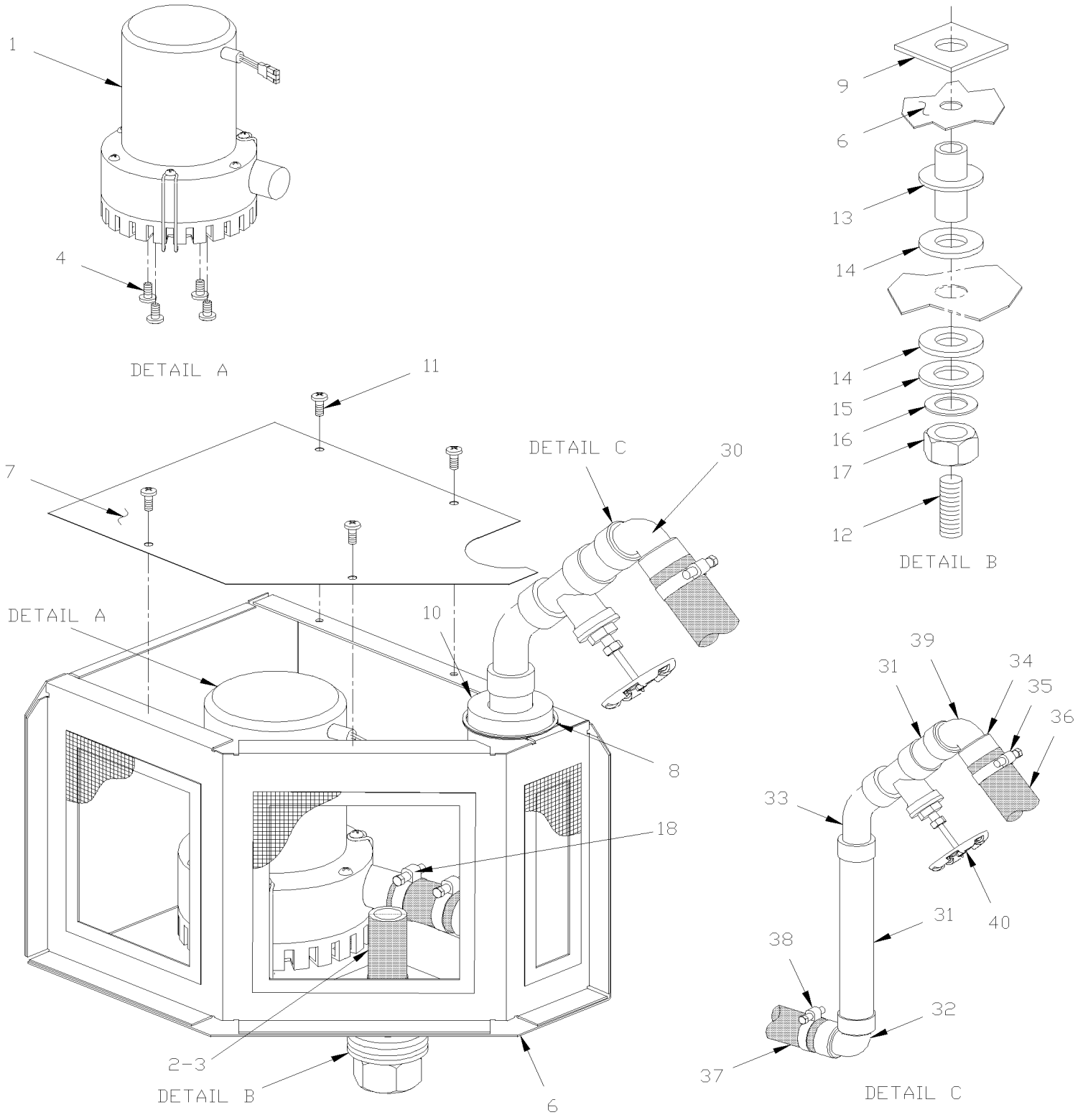

From Y-7046 To 6-8906		Date:07/2024	PAGE:Y2-2326-00

TOILET PUMP ASSY

Item#	Part	Description	XLII 45	XLII MTH40	XLII MTH45	XLII MTH45E	NOTES
1	900960	PUMP TOILET	1				
1	901421	. BASE, STRAINER	1				
2	503455	HOSE RADIATOR / 7/8" I.D. X 3`/ "GREEN STRIPE"	AR				
3	504319	HOSE CLAMP / 1"-1"1/2 SS / E.T. 16	1				
4	500952	SCREW TP BDG PH #8x1/2 SS	4				
6	404915	BOX	1				
7	404133	COVER ASSY	1				
8	506338	RUBBER CHANNEL / 1/16" x 1/4" INT "U" SHAPE / ROUND C.T.L.	AR				
8	680096	SEALANT BUTYL ALUM / GREY / 310ml CARTRIDGE	AR				
9	402652	SEAL, RUBBER / LEVEL TUBE / 1/16" THICK / S.D.	1				
10	402653	SEAL, RUBBER / TUBE & COVER	1				
11	502526	SCREW TC BDG PH #12-24x3/4 Z050	4				
12	501426	NIPPLE / PIPE FITTING / 1/2NPT-Mx1/2NPT-Mx2 1/2 STL	1				
13	401748	FLANGE ASSY	1				
13	408251	FLANGE ASSY SERVICE	1				
14	400296	SEAL NEOPRENE	2				
15	500456	WASHER FL 1.062x2.000x.134 Z050	1				
16	500491	WASHER LO INT 1.019x1.637x.067 Z050	1				
17	500746	NUT HEX JAM 1-14 Z050	1				
17	5001709	NUT HEX JAM LH 1-14 ZP SERVICE	1				
18	504413	HOSE CLAMP / 1"1/16-2" SS / HAS-24	1				
30	402377	TUBE ASSY W/GATE VALVE	1				
31	503198	. COPPER TUBE .875" O.D. x .045" x 240"	AR				
32	501222	. FEMALE ELBOW 90º SHORT RADIUS / COPPER TUBE / 1Fx3/4F	1				
33	501863	. STREET ELBOW 45º / COPPER TUBE / 3/4Mx3/4F	1				
34	501193	. COUPLING REDUCER / COPPER TUBE / 3/4Fx1/2F	1				
35	504019	. HOSE CLAMP / 9/16"-1"1/16 SS / HS-10	1				
36	900220	. TUBE PVC / 5/8" I.D. / S.L.	1				
37	050937	. HOSE / W/O BYPASS VALVE / 1 1/8" I.D. X 3"	1				
38	504022	. HOSE CLAMP / 3/4"-1"3/4 SS / HS-20	1				
39	501217	. STREET ELBOW 90º SHORT RADIUS / COPPER TUBE / 3/4Mx3/4F	1				
40	501958	. GATE VALVE 7/8" (WELDED)	1				

From Y-7046 To 6-8906		Date:07/2024	PAGE:Y2-2327-00
SUMP TANK - PLASTIC			

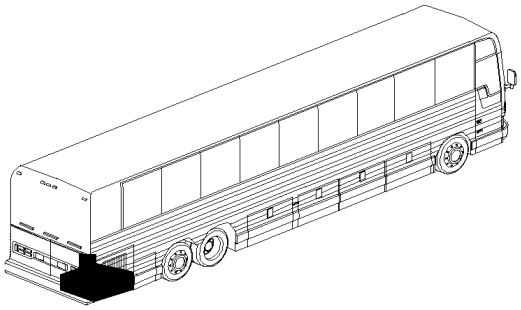

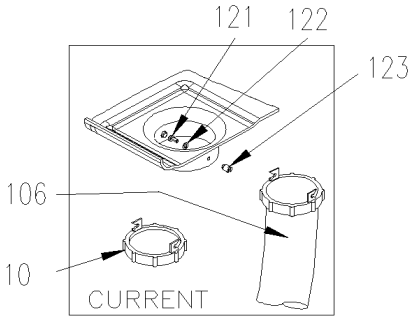

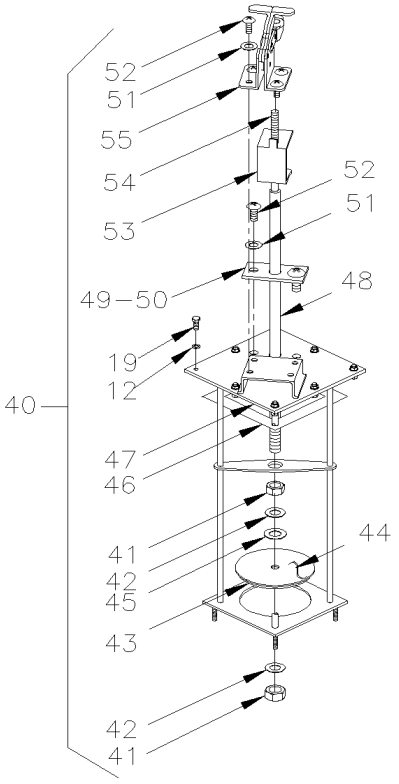

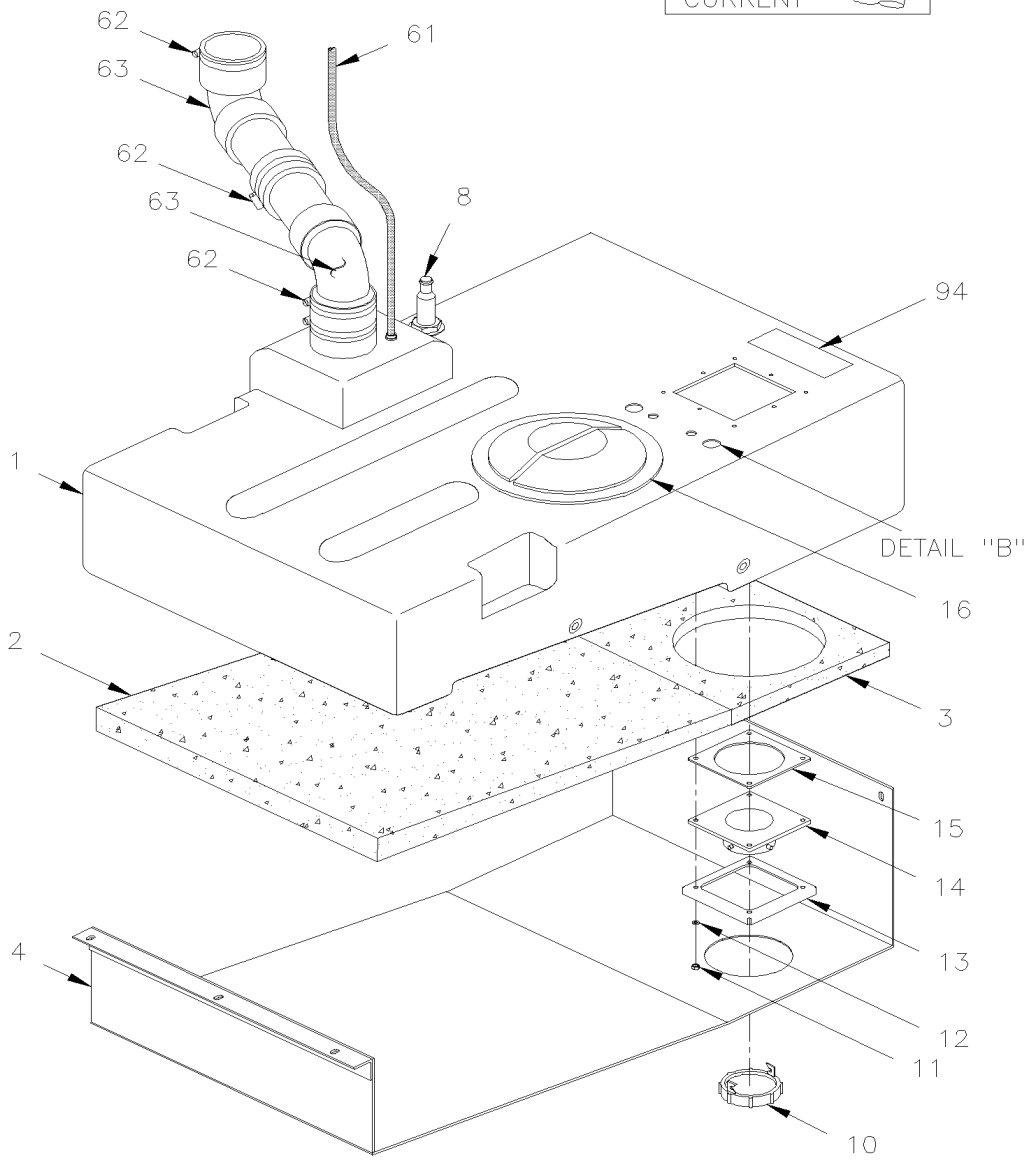

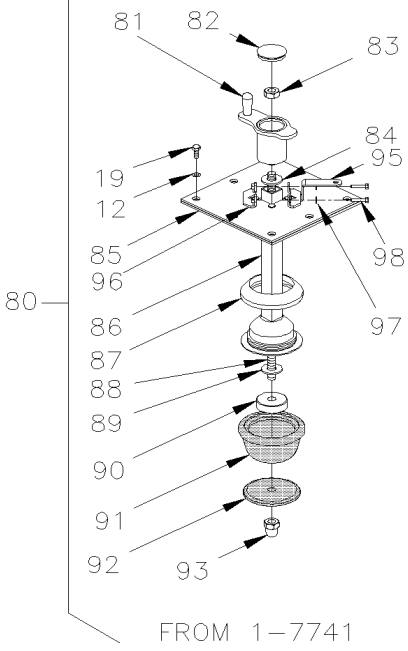

From Y-7046 To 6-8906		Date:07/2024	PAGE:Y2-2327-00
SUMP TANK - PLASTIC			

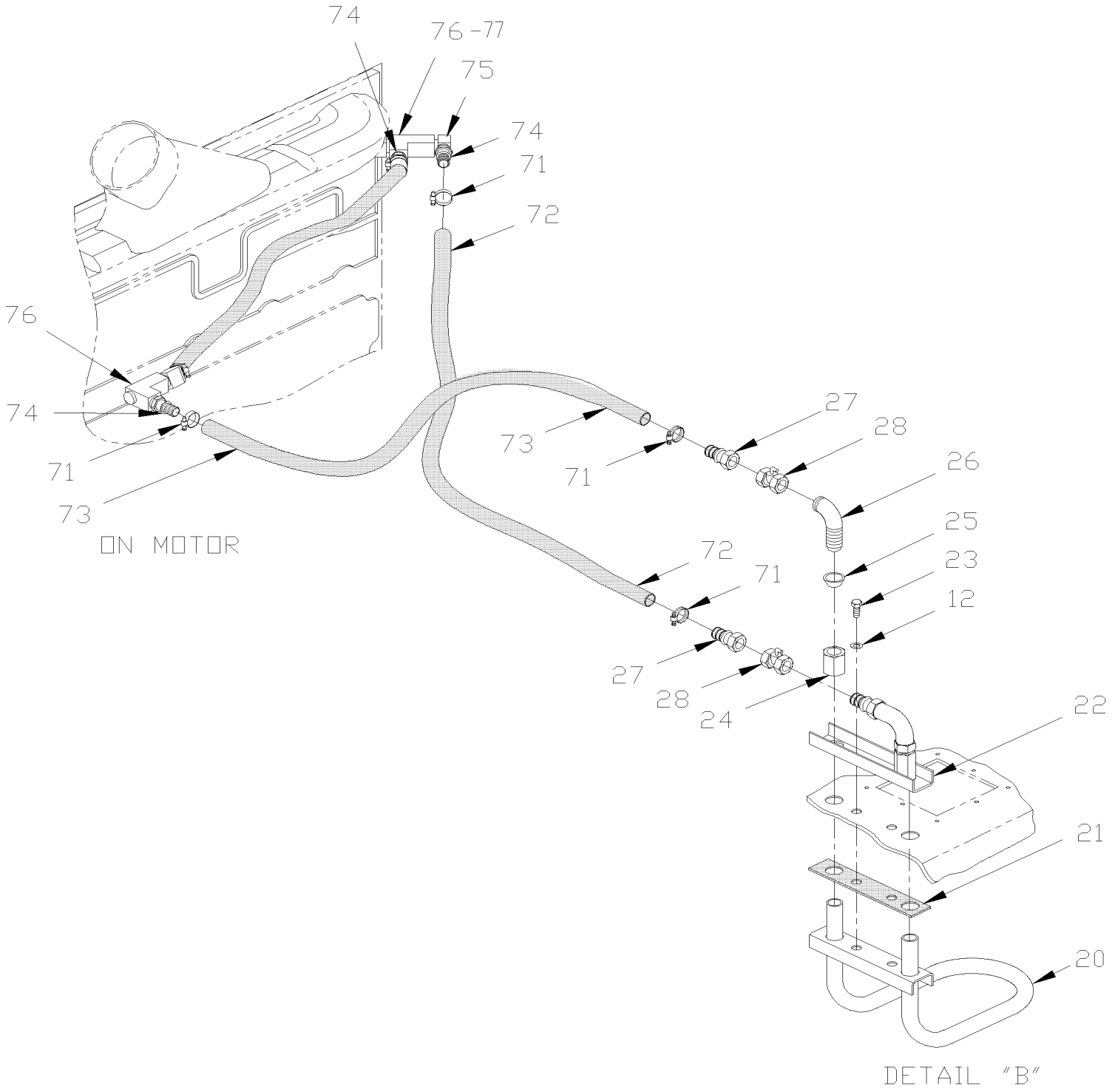

From Y-7046 To 6-8906		Date:07/2024	PAGE:Y2-2327-00

SUMP TANK - PLASTIC

Item#	Part	Description	XLII 45	XLII MTH40	XLII MTH45	XLII MTH45E	NOTES
	407552	SUMP TANK ASSY / (COMPLET FOR RETROFIT)	1				
1	404872	SUMP TANK To 2-7740	1				
. NS	IS-99004	. SEE INSTRUCTION SHEET To 2-7740	1				
. NS	D400291	. EMPTYING PLUG INSTALLATION To 2-7740	1				
1	405208	SUMP TANK From 2-7741	1				
. NS	D400361	. DIAGRAM INSTALL From 2-7741	1				
2	404340	INSULATOR PANEL	1				A
3	404341	INSULATOR PANEL	1				A
4	404335	BOTTOM PANEL	1				A
NS	955525	SCREW CAP HEX 5/16-18x1 G5 ZG603	3				A
NS	500441	WASHER FL .312x.734x.065 Z050	9				A
NS	500248	NUT HEX STO 5/16-18 N500	3				A
8	900280	THRU HULL, CONNECTOR / PLASTIC	1				A
NS	409038	GASKET	1				A
10	900520	CAP To 1-7740	1				D
NS	404972	PLATE / TO FIXING EMTYING PLUG From 2-7741	1				D
NS	404342	GASKET From 2-7741	1				D
NS	502564	WASHER LO SPT 6.1x11.8x1.6 Z050 From 2-7741	4				D
NS	502511	NUT HEX NYRT M6-1.0 Z050 From 2-7741	4				D
11	502511	NUT HEX NYRT M6-1.0 Z050 To 1-7740	4				
12	502564	WASHER LO SPT 6.1x11.8x1.6 Z050 To 1-7740	12				
NS	502582	WASHER LO SERR 6.1x16.2x0.9 Z050 To 1-7740	4				
13	404373	PLATE To 1-7740	1				
13	404972	PLATE / TO FIXING EMTYING PLUG From 1-7741	1				C
14	900522	HOSE ADAPTOR / BAYONET FLANGE To 1-7740	1				
15	404342	GASKET To 1-7740	1				
16	900825	8" CLOSED LID C/W RIM	1				
19	955269	SCREW CAP HEX M6-1.0x12 G8.8 ZG603	12				
20	404337	HEATER ASSY	1				
21	404367	GASKET	1				
22	404339	SUPPORT PLATE	1				
23	502737	SCREW CAP HEX M6-1.0x25 SS BK	2				
24	5011027	NUT FLARELESS TUBE / JIC 37° FITTING / #10 STL	2				
25	5011028	FERRULE FLARELESS TUBE / JIC 37° FITTING / #10 STL	2				
26	5011137	UNION ELBOW 90º / JIC 37° FITTING / #10JIC-Mx#10JIC-M STL	2				
26	5011176	MALE ELBOW 90° / JIC 37° FITTING / #10JIC-Mx1/2NPT-M STL	2				
27	507605	MALE CONNECTOR / HOSE BARB FITTING / #12x1/2NPT-M BR	2				
28	530096	BALL VALVE 1/2" NPT 1/2 NPT F x 1/2 NPT F	2				
40	404148P	EMPTYING TRAP DOOR To 1-7740	1				B
41	500875	. NUT HEX M12-1.75 SS To 1-7740	1				
42	500958	. WASHER FL .531x1.062x.095 SS To 1-7740	2				

From Y-7046 To 6-8906		Date:07/2024	PAGE:Y2-2327-00

SUMP TANK - PLASTIC

Item#	Part	Description	XLII 45	XLII MTH40	XLII MTH45	XLII MTH45E	NOTES
43	404156	. GASKET To 1-7740	1				
NS	681285	. ADHESIVE To 1-7740	AR				
44	404100	. CAP To 1-7740	1				
45	404432	. O-RING To 1-7740	1				
46	404136	. GASKET To 1-7740	1				
47	404394	. FRAME (WELDED) To 1-7740	1				
48	404144	. CENTER ROD To 1-7740	1				
49	404396	. PLATE To 1-7740	1				
NS	680096	. SEALANT BUTYL ALUM / GREY / 310ml CARTRIDGE To 1-7740	AR				
50	507290	. MOLYTHANE SEAL POLYPAK To 1-7740	1				
51	502564	. WASHER LO SPT 6.1x11.8x1.6 Z050 To 1-7740	6				
52	502526	. SCREW TC BDG PH #12-24x3/4 Z050 To 1-7740	8				
53	404182	. HOOK To 1-7740	1				
54	504644	. PROTECTOR CAP / BLACK / .281 I.D. x .500 To 1-7740	1				
55	900834	. LOCK LEVER To 1-7740	1				
61	503406	TUBE, NYLON 1/2 O.D. / GREEN S.L.	AR				
NS	641012	BULKHEAD UNION / NTA FITTING / #8x3/8NPT-M BR	1				A
62	503532	UNION / ABS PIPE / 3Fx3F NEO To 5-8569	3				
62	504235	HOSE CLAMP / 3"9/16"-4"1/2 SS / HS-64 From 5-8570	4				A
63	404324	TUBE ASSY / ABS To 5-8569	2				
63	530211	ELBOW 45° X 3 1/2" I.D. RUBBER From 5-8570	2				A
NS	404325	SEAL PLASTIC 4" I.D. / PIPE & FLOOR	1				A
NS	405711	TUBE DRAIN 3 ½" O.D. x 181MM SS From 5-8570	1				A
71	504646	HOSE CLAMP / 11/16"-1"1/4 / C.T. 9412	4				
72	404427	HOSE / HEATER & ENGINE / 3/4" I.D. 1260MM	1				
73	402618	HOSE / HEATER & ENGINE / 3/4" I.D. 960MM	1				
73	503523	HOSE SILICONE 1PLY 3/4" I.D. x 100' / S.L.	AR				
74	507605	MALE CONNECTOR / HOSE BARB FITTING / #12x1/2NPT-M BR	3				
75	5011038	MALE ELBOW 90º / BEADED HOSE BARB / #12x1/2NPT-M To 3-8164	1				
76	501473	MALE RUN TEE / PIPE FITTING / 1/2NPT-Mx1/2NPT-Fx1/2NPT-F BR To 3-8164	2				
77	501528	STREET ELBOW 45º / PIPE FITTING / 1/2NPT-Mx1/2NPT-F BR	1				
80	404948P	EMPTYING PLUG ASSY From 1-7741	1				C
81	404953	. CRANK From 1-7741	1				
81	405446	. CRANK W/FLANGE	1				E
82	689948	. HOLE PLUG / 1.25OD X .125 NYL BK From 1-7741	1				
83	502567	. NUT HEX M10-1.5 SS From 1-7741	1				
84	509802	. WASHER FL .500x1.125x.081 BR From 1-7741	1				
85	404949	. PLATE ASSY / W/19MM SQ HOLE From 1-7741	1				
. NS	404950	. . PLATE From 1-7741	1				
. NS	404951	. . SEAL RUBBER / W/19MM SQ HOLE From 1-7741	1				
. NS	405083	. . SEAL RETAINER From 1-7741	1				
. NS	504643	. . RIVET POP DOME OE 1/8x1/2 SS From 1-7741	4				

From Y-7046 To 6-8906		Date:07/2024	PAGE:Y2-2327-00

SUMP TANK - PLASTIC

Item#	Part	Description	XLII 45	XLII MTH40	XLII MTH45	XLII MTH45E	NOTES
85	407499	. PLATE ASSY / W/22MM SQ HOLE SERVICE From 1-7741	1				
. NS	407497	. . PLATE From 1-7741	1				
. NS	407498	. . SEAL RUBBER / W/22MM SQ HOLE From 1-7741	1				
. NS	407496	. . SEAL RETAINER FORMER ONE PIECE From 1-7741	1				
. NS	409262	. . SEAL RETAINER CURRENT TWO PIECES From 1-7741	2				
. NS	504643	. . RIVET POP DOME OE 1/8x1/2 SS From 1-7741	4				
86	407494	. TUBE PLASTIC From 1-7741	1				
86	409257	. TUBE PLASTIC SERVICE From 1-7741	1				
87	404956	. CLAMPING RING From 1-7741	1				
87	409256	. CLAMPING RING SERVICE From 1-7741	1				
88	407495	. ROD From 1-7741	1				
89	5001443	. WASHER FL 10.3x38.0x3.0 SS From 1-7741	1				
90	404958	. SPACER From 1-7741 To 3-8039	1				
91	409989	. PLUG RUBBER From 1-7741	1				
92	404959	. WASHER, CONIC From 1-7741	1				
93	5001511	. NUT HEX CAP M10-1.5 SS From 1-7741	1				
94	405194	. DECAL "OPENING & CLOSING SUMP TANK PICTOGRA	1				A
95	405439	. HANDLE / USE W/SS TUBE ITEM # 86	1				E
95	405437	. HANDLE / USE W/PLASTIC TUBE ITEM # 86	1				F
96	405436	. COLLAR ASSY W/NUT	1				E
96	405438	. COLLAR ASSY W/NUT	1				F
97	502570	. WASHER LO SPT 6.1x11.8x1.6 SS	2				
98	5001165	. SCREW CAP HEX M6-1.0x20 SS EMN	2				
100	405440	KIT COLLAR & HANDLE / W/SS TUBE	1				E
. NS	IS-02130	. SEE INSTRUCTION SHEET	1				E
100	405441	KIT COLLAR & HANDLE / W/PLASTIC TUBE	1				F
. NS	IS-02130	. SEE INSTRUCTION SHEET	1				F
NS	409990P	KIT EMPTYING PLUG SUMP TANK	1				
106	900525	HOSE SUMP TANK	1				D
121	500557	SCREW MA PAN PH #8-32x3/8 SS	2				D
122	502556	WASHER FL 4.3x9.0x0.8 SS	2				D
123	405827	ADAPTOR WITH SPECIAL NUT / TO FIX DUMP HOSE	2				D
123	D400361	DIAGRAM INSTALL	1				D
		A) FOR RETROFIT YOU NEED ALL THOSE ITEMS					
		B) FOR PRODUCT IMPROVEMENT ASK KIT #409990P FOR INSTALLATION SEE DIAGRAM D-400291					
		C) USE AND INCLUDE WITH KIT 409990P					
		D) FOR RETROFIT HOSE ADAPTOR TO DUMP SUMP WITH NEW MODEL OF TANK (#405208) YOU REQUIRE FOLLOWING PARTS AFTER REMOVE THE EXIT NIPPLE MOULDED TO TANK EFF.: 2-7741					
		E) USE WITH PLASTIC TUBE #86					
		F) USE WITH STAINLESS STEEL TUBE #86					

From Y-7046 To 6-8906		Date:07/2024	PAGE:Y2-2328-00
LAVATORY WALL - INSTALLATION			

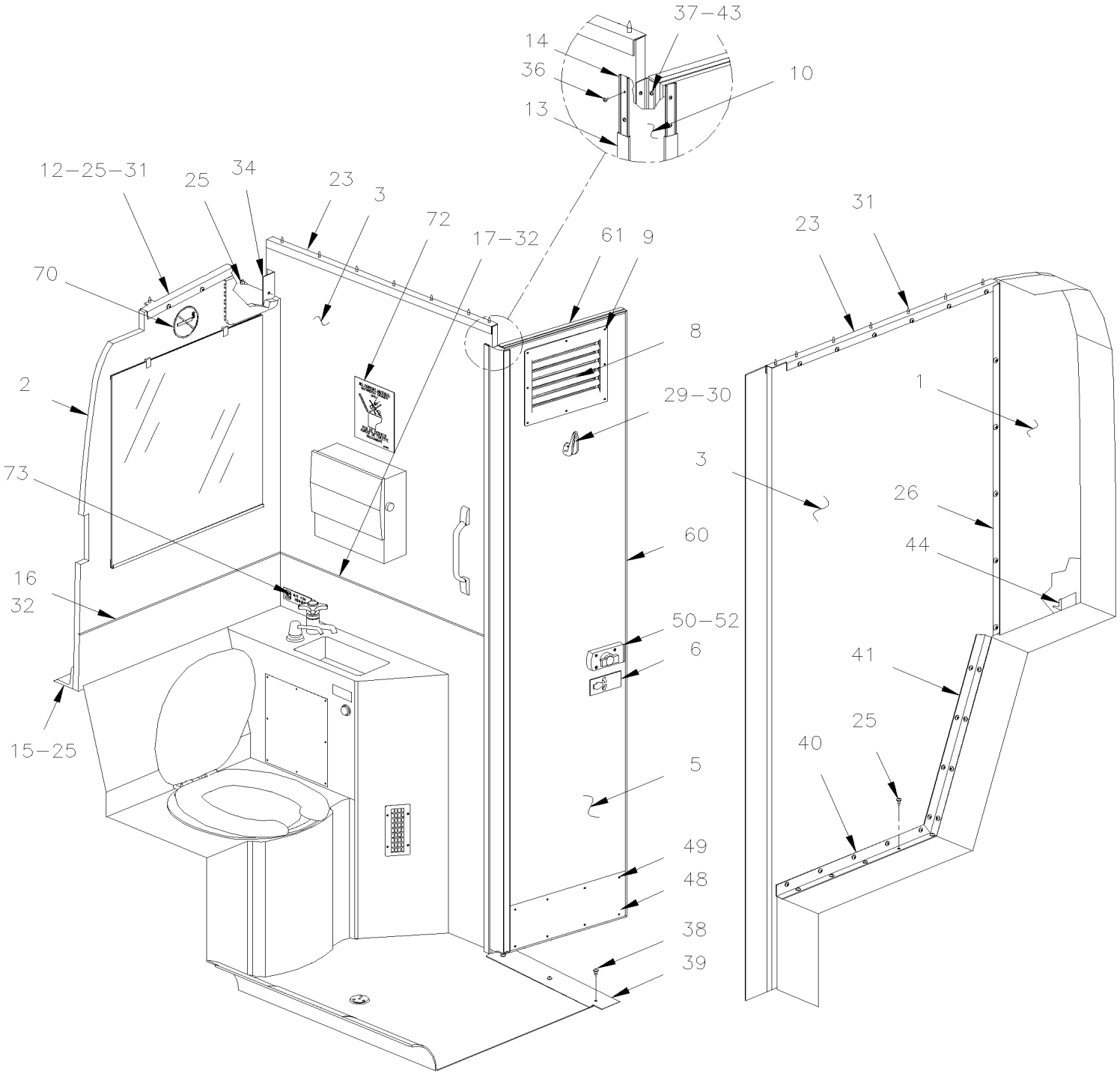

From Y-7046 To 6-8906		Date:07/2024	PAGE:Y2-2328-00
LAVATORY WALL - INSTALLATION			

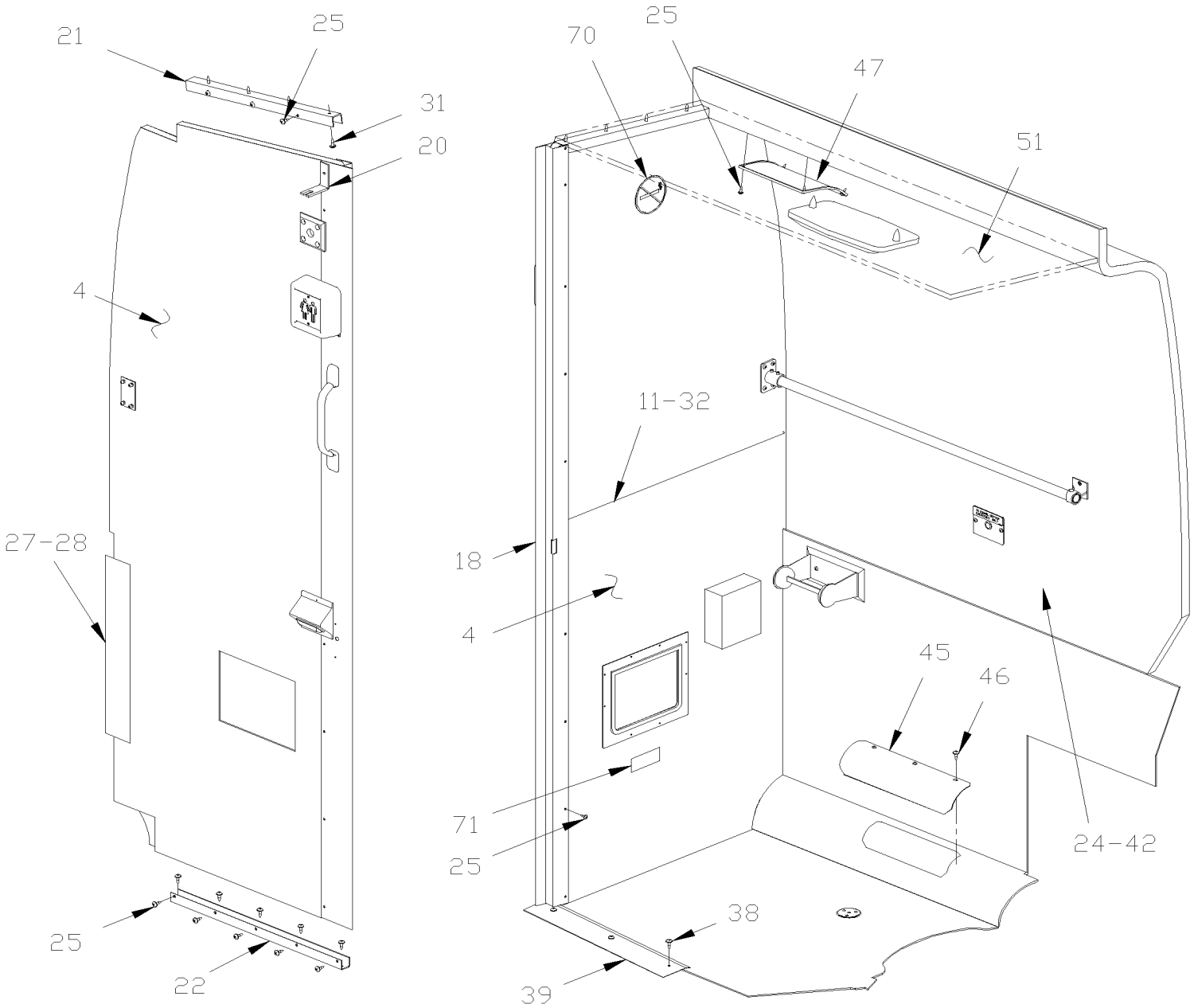

From Y-7046 To 6-8906		Date:07/2024	PAGE:Y2-2328-00

LAVATORY WALL - INSTALLATION

Item#	Part	Description	XLII 45	XLII MTH40	XLII MTH45	XLII MTH45E	NOTES
1	Call order desk	WALL ASSY, REAR SIDE / TISSUS / SPECIFY COLOR CODE	1				P
1	Call order desk	WALL ASSY, REAR SIDE / CARPET / SPECIFY COLOR CODE	1				P
1	Call order desk	WALL ASSY, REAR SIDE / FORMICA / SPECIFY COLOR CODE	1				P
2	Call order desk	WALL ASSY, REAR To 2-7922	1				P
2	405367P	WALL ASSY, REAR / W/WASH BASSIN From 2-7923	1				
2	Call order desk	WALL ASSY, REAR / W/OUT WASH BASIN From 9-9796	1				P
3	Call order desk	WALL ASSY, SIDE / TISSUS / SPECIFY COLOR CODE	1				P
3	Call order desk	WALL ASSY, SIDE / CARPET / SPECIFY COLOR CODE	1				P
3	Call order desk	WALL ASSY, SIDE / FORMICA / SPECIFY COLOR CODE	1				P
4	Call order desk	WALL ASSY, FRONT / TISSUS / SPECIFY COLOR CODE	1				P
4	Call order desk	WALL ASSY, FRONT / CARPET / SPECIFY COLOR CODE	1				P
4	Call order desk	WALL ASSY, FRONT / FORMICA / SPECIFY COLOR CODE	1				P
NS	506001	TAPE RUB ADH1 CC POL 1/8" x 3/4" x 50' / GREY 2520X To 2-7922	AR				
NS	506003	TAPE RUB ADH1 CC POL 3/16" x 3/4" x 40' / GREY 2520X From 2-7923	AR				
NS	506264	TAPE RUB ADH1 URE 3/4" x 1" x 12.5' / GREY 1820X	AR				
5	405279	LAVATORY DOOR ASSY / FORMICA / SPECIFY COLOR CODE To 2-7922	1				
5	405280	LAVATORY DOOR ASSY / FORMICA / SPECIFY COLOR CODE From 2-7923	1				
5	405281	LAVATORY DOOR ASSY / CARPET / SPECIFY COLOR CODE To 2-7922	1				
5	405282	LAVATORY DOOR ASSY / CARPET / SPECIFY COLOR CODE From 2-7923	1				
5	405283	LAVATORY DOOR ASSY / TISSUS / SPECIFY COLOR CODE To 2-7922	1				
5	405284	LAVATORY DOOR ASSY / TISSUS / SPECIFY COLOR CODE From 2-7923	1				
6	402741	DECAL "VEROUILLER" To 2-7922	1				
6	402743	DECAL "LOCK FOR LIGHTING" To 2-7922	1				
6	405222	DECAL / LAVATORY OPEN / LOCK / ENGLISH From 2-7923	1				
6	403820	DECAL / LAVATORY OPEN / LOCK FOR LIGHTING / ENGLISH & FRANCAIS From 2-7923	1				
6	405642	DECAL / LAVATORY OPEN / LOCK FOR LIGHTING / ENGLISH & SPANISH From 2-7923	1				
8	405065	GRILL, VENT / MED GREY	2				
9	500409	SCREW TP PAN PH #8x1/2 BK	AR				
10	405016	LEATHERETTE / GREY / 125MM X 1990MM To 2-7922	1				
10	405217	LEATHERETTE / GREY / 125MM X 1990MM From 2-7923	1				
11	403972	MOULDING "J" FORM / 660MM (26") / F/F	1				
12	404926	MOULDING / "U" SHAPE 520MM	1				
13	404970	MOULDING CAP / SS 2100MM	2				
14	404971	MOULDING RETAINER / 1980MM	2				
15	400719	ANGLE, RETAINING / BEHIND REAR WALL / 30"	1				
16	403973	MOULDING "J" FORM / 760MM (29 15/16") / F/F	1				
NS	404537	SPACER WOOD	1				
17	400886	MOULDING "J" FORM / 788MM (31") / A/A	1				
18	404973	MOULDING DOOR To 2-7922	1				
18	405212	MOULDING DOOR From 2-7923	1				
18	405206	MOULDING DOOR To 2-7922	1				A
18	405313	MOULDING DOOR From 2-7923	1				A

From Y-7046 To 6-8906		Date:07/2024	PAGE:Y2-2328-00

LAVATORY WALL - INSTALLATION

Item#	Part	Description	XLII 45	XLII MTH40	XLII MTH45	XLII MTH45E	NOTES
18	405116	MOULDING DOOR To 2-7922	1				B
18	405223	MOULDING DOOR From 2-7923	1				B
20	315891	ANGLE SUPPORT / (FIXED TO LAVATORY WALL)	1				
21	404924	MOULDING / "U" SHAPE 460MM	1				
22	403700	MOULDING / "U" SHAPE 533MM	1				
23	404925	MOULDING "U" 873MM /	1				
24	326966	WALL FIBERGLASS PANEL To 4-8216	1				
24	328039	WALL FIBERGLASS PANEL LAVATORY 1267MM From 4-8217	1				
NS	500583	SCREW TP PAN PH #6x1/2 Z050	20				
NS	500463	WASHER FN CKF .187x.500x.090 BR Z050	10				
NS	506282	TAPE RUB ADH1 CC POL 3/8" x 1" x 20' / GREY 2520	AR				
NS	506071	TAPE RUB ADH1 CC POL 1/8" x 1/2" x 50' / GREY 2520X	AR				
25	500641	SCREW TP PAN PH #8x3/4 Z050	AR				
26	404974	CHANNEL / "Z" SHAPE 1112MM	1				
27	400725	ANGLE, RETAINING 23"	1				
28	401173	ANGLE, RETAINING 12"	1				
29	900297	HOOK / COAT	1				
30	500626	SCREW TP OV PH #8x3/4 Z050	2				
31	504127	RIVET POP DOME OE 3/16x3/4 AL To 1-7702	10				
31	500641	SCREW TP PAN PH #8x3/4 Z050 From 1-7703	8				
32	500552	SCREW TP OV PH #6x3/4 Z050	16				
34	404933	ANGLE / TO FIX SIDE WALL TO REAR WAL 1047.5MM	1				
36	500583	SCREW TP PAN PH #6x1/2 Z050	33				
37	500614	SCREW TP FL PH #6x3/4 Z050	30				
38	500640	SCREW TP PAN PH #6x3/4 Z050	12				
39	403705	PROTECTOR, FLOOR 494MM	1				
40	404931	ANGLE 800MM	1				
41	404934	ANGLE 600MM	1				
42	500614	SCREW TP FL PH #6x3/4 Z050	AR				
43	780134	HINGE NP .040 X 3/4 X 3/4 X 72"	1				
44	404975	ANGLE / TO FIX REAR SIDE WALL 100MM	1				
45	400874	PLATE, ACCESS / TOILET HEATING TUBE	1				
46	500638	SCREW TP PAN PH #8x1/2 Z050	5				
47	404998	CLOSING PANEL	1				
48	405126	PROTECTOR PANEL 460MM x 100MM SS	1				
49	500952	SCREW TP BDG PH #8x1/2 SS	6				
50	**Y2-2329-00**	**LAVATORY DOOR LOCK & SWITCH**					
51	**Y2-1837-00**	**CEILING PANELS & MOULDING - BUS**					
52	405518	PLATE RETAINING DOOR / 76MM X 31MM	1				
60	405006	MOULDING "J" FORM / 1985MM / A/A	1				C
60	405005	MOULDING "J" FORM / 1985MM / A/A	1				D
61	401490	MOULDING "J" FORM / 463MM (18 1/4") / A/A	1				C

From Y-7046 To 6-8906		Date:07/2024	PAGE:Y2-2328-00

LAVATORY WALL - INSTALLATION

Item#	Part	Description	XLII 45	XLII MTH40	XLII MTH45	XLII MTH45E	NOTES
61	401309	MOULDING "J" FORM / 463MM (18 1/4") / A/A	1				D
70	900313	DECAL / "NO SMOKING" / 2 3/4" O.D.	2				
71	402742	DECAL / "TRASH" / ENGLISH	1				
71	400746	DECAL / "WASTE" / ENGLISH & FRANCAIS	1				
72	401956	DECAL "NO FOREIGN MATERIAL..." / ENGLISH	1				
72	400583	DECAL "NO FOREIGN MATERIAL..." / ENGLISH & FRANCAIS	1				
72	406184	DECAL "NO FOREIGN MATERIAL..." / ENGLISH & SPANISH	1				
73	400127	DECAL "DO NOT DRINK THIS WATER" / ENGLISH To 2-7922	1				
73	402748	DECAL / "NOT FOR DRINKING" / ENGLISH From 2-7923	1				
73	400578	DECAL "DO NOT DRINK THIS WATER" / BILINGUAL To 2-7922	1				
73	405232	DECAL / "DO NOT DRINK THIS WATER" / ENGLISH & FRANCAIS From 2-7923	1				
		A) USE WITH AUXILIARY SWITCH FOR LAVATORY LIGHTNING					
		B) USE WITH WASTE TRASH CAN LIGHTENING					
		C) USE WITH DOOR WITH CARPET					
		D) USE WITH DOOR WITH TISSUS					
		P) CALL ORDER DESK FOR SPECIFIC APPLICATION (V.I.N.)					

From Y-7046 To 6-8906		Date:07/2024	PAGE:Y2-2329-00
LAVATORY DOOR LOCK & SWITCH			

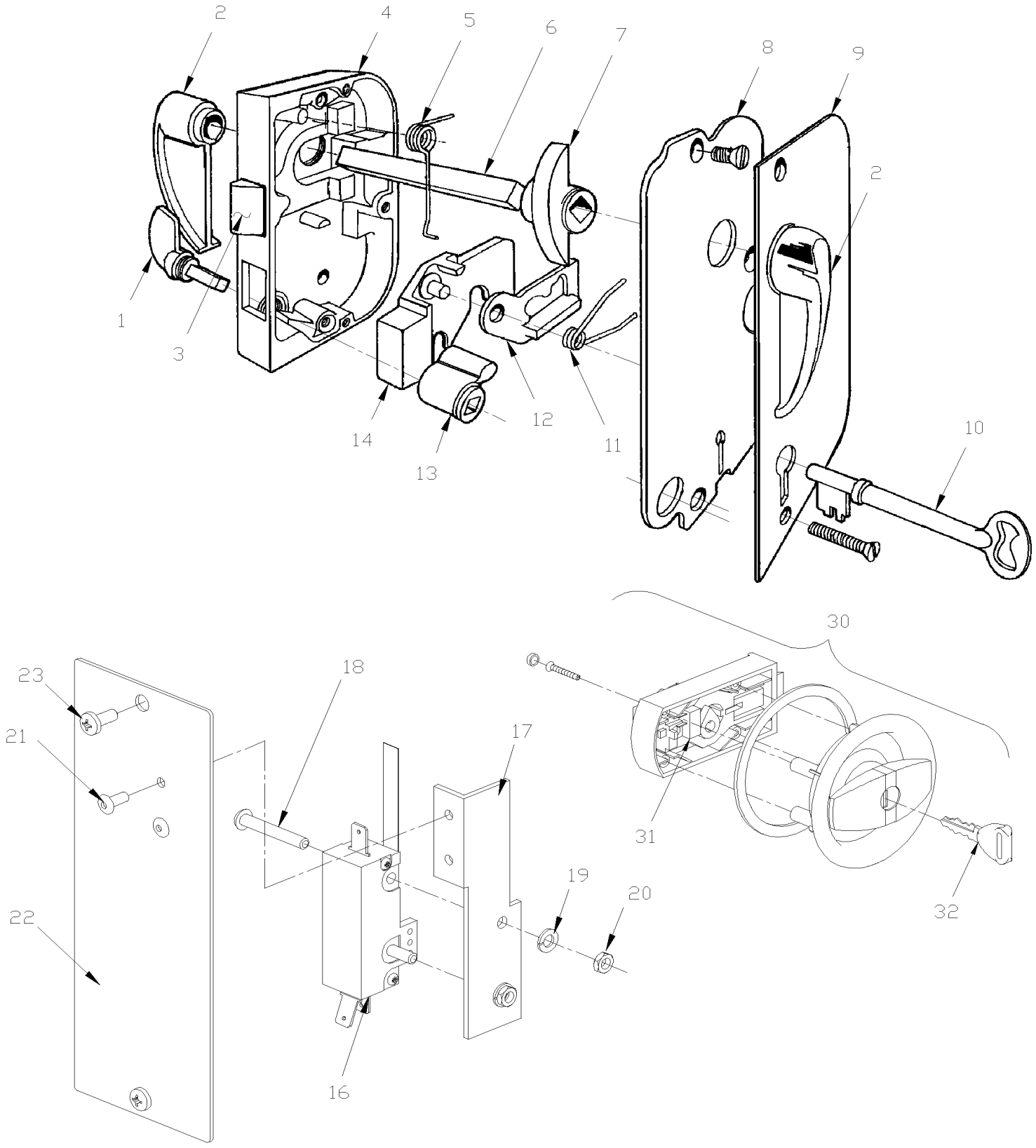

From Y-7046 To 6-8906		Date:07/2024	PAGE:Y2-2329-00

LAVATORY DOOR LOCK & SWITCH

Item#	Part	Description	XLII 45	XLII MTH40	XLII MTH45	XLII MTH45E	NOTES
	900375	LOCK ASSY, DOOR To 1-7686	1				
NS	500887	. SCREW MA FL PH #8-32x1 1/4 SS To 1-7686	3				A
1	900629	. THUMB, PIECE To 1-7686	1				
2	900630	. HANDLE, DOOR To 1-7686	2				
3	900631	. BOLT, LATCH To 1-7686	1				
4	N.S.S.	. CASE (ONLY) To 1-7686	1				1
5	900632	. SPRING, TORSION / .348 I.D. x .275 x .055 To 1-7686	1				
6	N.S.S.	. ROD, SQUARE 5/16" X S.L. To 1-7686	AR				1
7	900633	. FOLLOWER To 1-7686	1				
8	N.S.S.	. COVER, CASE To 1-7686	1				1
NS	500272	. SCREW MA FL PH #8-32x1/2 ZP To 1-7686	3				
9	900634	. ESCUTCHEON ASSY To 1-7686	1				
10	900299	. KEY / LAVATORY DOOR "ADAMS & WESTLAKE" To 1-7686	1				
11	900635	. SPRING, TORSION / .305 I.D. x .162 x .050 To 1-7686	1				
12	900636	. TUMBLER To 1-7686	1				
13	900637	. FOLLOWER / THUMB PIECE To 1-7686	1				
14	N.S.S.	. BOLT, DEAD To 1-7686	1				1
15	400764	SWITCH ASSY To 1-7686	1				
16	560725	. MICRO SWITCH To 1-7686	1				
17	400765	. SUPPORT / MICRO SWITCH To 1-7686	1				
18	500380	. SCREW MA RND SLT #5-40x1 BZC To 1-7686	2				
19	500470	. WASHER LO SPT .193x.334x.047 Z050 To 1-7686	1				
20	500766	. NUT HEX #5-40 ZP To 1-7686	2				
21	504105	. RIVET POP DOME OE 1/8x3/16 AL To 1-7686	2				
22	400766	. PLATE, CLOSING To 1-7686	1				
22	402741	DECAL "VEROUILLER" To 1-7686	1				
22	402743	DECAL "LOCK FOR LIGHTING" To 1-7686	1				
22	405222	DECAL / LAVATORY OPEN / LOCK / ENGLISH From 1-7687	1				
22	403820	DECAL / LAVATORY OPEN / LOCK FOR LIGHTING / ENGLISH & FRANCAIS From 1-7687	1				
22	405642	DECAL / LAVATORY OPEN / LOCK FOR LIGHTING / ENGLISH & SPANISH From 1-7687	1				
NS	405207	PLATE, CLOSING / 100MM x 57MM To 1-7686	1				B
22	563083	. SWITCH / OFF-ON / S.P.S.T. / BLACK To 1-7686	1				B
23	500653	SCREW TC PAN PH #8-32x1/4 Z050 To 1-7686	2				
30	901039	LOCK ASSY, DOOR From 1-7687 To 5-8521	1				
30	901114	LOCK ASSY, DOOR From 5-8522	1				
31	563097	. . MICRO SWITCH / N.C. From 1-7687	1				
32	901066	. . KEY / LAVATORY DOOR "HAPPICH" From 1-7687 To 5-8521	1				
32	**Y2-1867-00**	**KEY & CYLINDER CODE "FORD" & "NS"**					C
NS	064372	WIRING HARNESS LAVATORY DOOR From 1-7687	1				
NS	504531	TIE MOUNT / 3/16" #10 SCREW / TA1S8-C From 1-7687	1				
NS	504273	CABLE TIE / 1/8" X 3"1/2 From 1-7687	1				
NS	500417	SCREW TP PAN PH #6x3/8 Z050 From 1-7687	1				

From Y-7046 To 6-8906		Date:07/2024	PAGE:Y2-2329-00

LAVATORY DOOR LOCK & SWITCH

Item#	Part	Description	XLII 45	XLII MTH40	XLII MTH45	XLII MTH45E	NOTES
		A) TO FIX LOCK ASSY TO DOOR					
		B) USE WITH AUXILIARY SWITCH					
		C) SEE #30 AT PAGE Y2-1867-00 FOR KEY CODE					
		1) NOT SOLD SEPARATELY					

From Y-7046 To 6-8906		Date:07/2024	PAGE:Y2-2330-00
WATER & SUMP TANK - INSTALLATION			

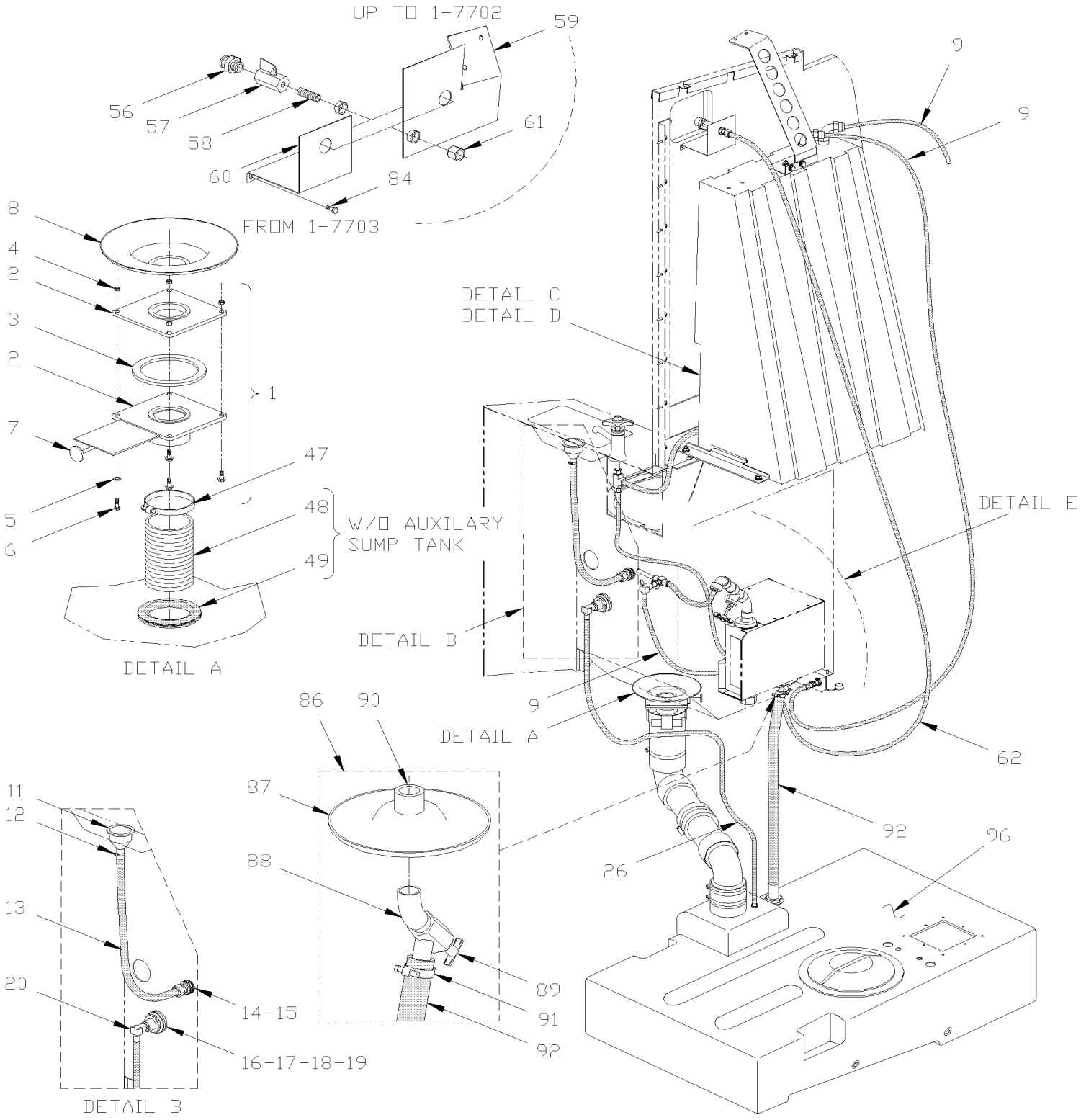

From Y-7046 To 6-8906		Date:07/2024	PAGE:Y2-2330-00
WATER & SUMP TANK - INSTALLATION			

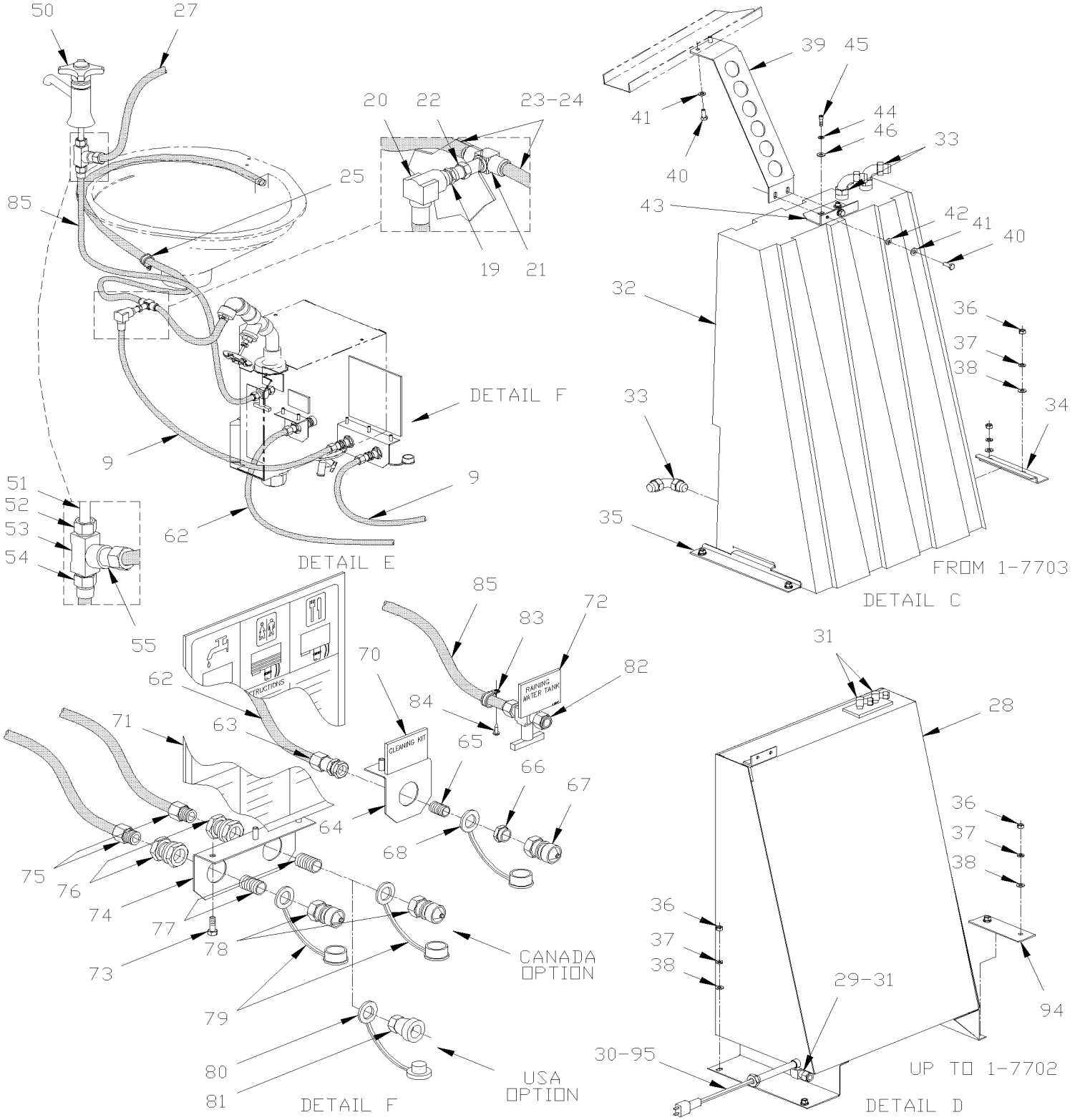

From Y-7046 To 6-8906		Date:07/2024	PAGE:Y2-2330-00

WATER & SUMP TANK - INSTALLATION

Item#	Part	Description	XLII 45	XLII MTH40	XLII MTH45	XLII MTH45E	NOTES
1	403682	THREADED VALVE ASSY W/SS HANDLE	1				
2	900197	. THREADED VALVE ASSY W/PLASTIC HANDLE	1				
3	900330	. . SEAL	2				
4	500769	. . NUT HEX 1/4-20 Z050	4				
5	500411	. . WASHER FL .260x.697x.050 SS	4				
6	500994	. . SCREW CAP HEX 1/4-20x1 3/4 G5 PT Z050	4				
7	403109	. HANDLE, THREADED VALVE / STANLESS STEEL	1				
7	680038	. THREAD LOCKER LOCTITE #243 / BLUE / 50ml	AR				
8	404325	SEAL PLASTIC 4" I.D. / PIPE & FLOOR	1				
9	503488	TUBE, NYLON 1/2 O.D. / BLACK S.L./	AR				
11	900509	STRAINER / WASHBASIN	1				
12	504019	HOSE CLAMP / 9/16"-1"1/16 SS / HS-10	2				
13	503006	HOSE 5/8" I.D. 50' / S.L.	AR				
14	900280	THRU HULL, CONNECTOR / PLASTIC	1				
15	409038	GASKET	1				
16	400296	SEAL NEOPRENE	1				
17	500491	WASHER LO INT 1.019x1.637x.067 Z050	1				
18	500456	WASHER FL 1.062x2.000x.134 Z050	1				
19	640863	BULKHEAD COUPLING / PIPE FITTING / 3/8NPT-Fx3/8NPT-F STL	2				
20	641376	MALE ELBOW 90° NON-SWIVEL / PUSH-IN FITTING / #8x3/8NPT-M BR	2				
21	501626	MALE BRANCH TEE/ COMPRESSION FITTING / #6x#6x1/4NPT-M BR	1				
22	501314	BUSHING REDUCER / PIPE FITTING / 3/8NTP-Mx1/4NPT-F BR	1				
23	503404	TUBE, NYLON 3/8 O.D. / BLACK S.L.	2				
24	503405	INSERT / NTA FITTING / #6 SS	1				
25	952625	CLAMP / 3/8" I.D.	2				
26	503406	TUBE, NYLON 1/2 O.D. / GREEN S.L.	AR				
27	503488	TUBE, NYLON 1/2 O.D. / BLACK S.L./	AR				
28	401612	WATER TANK ASSY To 1-7702	1				
28	401591	. WATER TANK WELDED / SS To 1-7702	1				
29	400696	. . COUPLING, BULK To 1-7702	1				
30	501304	. PLUG SQUARE HEAD / PIPE FITTING / 1/4NPT-M BR To 1-7702	1				
31	641376	. MALE ELBOW 90° NON-SWIVEL / PUSH-IN FITTING / #8x3/8NPT-M BR To 1-7702	3				
32	405241P	WATER TANK ASSY / PLASTIC From 1-7703	1				
32	900958	. WATER TANK / PLASTIC From 1-7703	1				
33	5011227	. MALE ELBOW 90° / COMPRESSION FITTING / #8x3/8NPT-M PLAS WHITE From 1-7703	3				
34	405236	SUPPORT "Z" 178MM From 1-7703	1				
35	405235	SUPPORT "Z" 300MM From 1-7703	1				
36	500778	NUT HEX 5/16-18 N500	4				
37	500476	WASHER LO SPT .317x.586x.078 Z050	4				
38	500473	WASHER LO SPT .262x.489x.062 Z050 To 1-7702	4				
38	500441	WASHER FL .312x.734x.065 Z050 From 1-7703	4				
39	404992	SUPPORT UPPER WATER TANK To 1-7702	1				

From Y-7046 To 6-8906		Date:07/2024	PAGE:Y2-2330-00

WATER & SUMP TANK - INSTALLATION

Item#	Part	Description	XLII 45	XLII MTH40	XLII MTH45	XLII MTH45E	NOTES
39	405225	SUPPORT UPPER WATER TANK From 1-7703	1				
40	500517	SCREW TC CAP HEXW 5/16-18x3/4 Z050	4				
41	500476	WASHER LO SPT .317x.586x.078 Z050	4				
42	500441	WASHER FL .312x.734x.065 Z050	2				
43	405233	ANGLE 114MM From 1-7703	1				
44	500473	WASHER LO SPT .262x.489x.062 Z050 From 1-7703	2				
45	5001515	SCREW CAP HEX 1/4-20x3/4 G8 Z050 From 1-7703	2				
46	500441	WASHER FL .312x.734x.065 Z050 From 1-7703	2				
47	504235	HOSE CLAMP / 3"9/16"-4"1/2 SS / HS-64	2				
48	503039	HOSE FLEXIBLE / 3 1/2" I.D. X 10'	AR				
49	509558	WEATHERSEAL SNAP-ON 1/8" / SINGLE LIP / WH / C.T.L.	AR				
50	900582	FAUCET	1				
51	501176	FITTIING STRAIGHT #8BBX	1				
52	501314	BUSHING REDUCER / PIPE FITTING / 3/8NTP-Mx1/4NPT-F BR	1				
53	501527	FEMALE UNION TEE / PIPE FITTING / 3/8NPT-Fx3/8NPT-Fx3/8NPT-F BR	1				
54	640990	MALE CONNECTOR / NTA FITTING / #6x3/8NPT-M BR	1				
55	641376	MALE ELBOW 90° NON-SWIVEL / PUSH-IN FITTING / #8x3/8NPT-M BR	1				
56	5011178	MALE CONNECTOR / GARDEN FITTING / 3/4GARDEN-Mx3/8NPT-M BR	1				
57	5011180	BALL VALVE 3/8 NPT M x 3/8 NPT M	1				
58	501325	NIPPLE / PIPE FITTING / 3/8NPT-Mx3/8NPT-Mx1 BR	1				
59	405036	ANGLE SUPPORT CLEANING VALVE To 1-7702	1				
60	405234	ANGLE SUPPORT CLEANING VALVE From 1-7703	1				
61	641012	BULKHEAD UNION / NTA FITTING / #8x3/8NPT-M BR	1				
62	503406	TUBE, NYLON 1/2 O.D. / GREEN S.L.	AR				
63	641012	BULKHEAD UNION / NTA FITTING / #8x3/8NPT-M BR	1				
64	405038	SUPPORT	1				
65	501325	NIPPLE / PIPE FITTING / 3/8NPT-Mx3/8NPT-Mx1 BR	1				
66	501534	BUSHING REDUCER / PIPE FITTING / 1/2NPT-Mx3/8NPT-F BR	1				
67	900323	NIPPLE / QUICK DISCONNECT "B SERIES" / #10x1/2NPT-F BR	1				
68	900326	DUST CAP / QUICK DISCONNECT "B SERIES" / #10 VINYL	1				
70	403551	DECAL / "CLEANING KIT" / ENGLISH	1				
71	400969	DECAL / "FILL INSTRUCTION" / ENGLISH & FRANCAIS	1				
72	405298	DECAL / "DRAINING WATER TANK" / ENGLISH	1				
72	405650	DECAL / "DRAINING WATER TANK" / ENGLISH & SPANISH	1				
73	500613	SCREW TP PAN PH #10x1/2 Z050	5				
74	400378	SUPPORT	1				
75	640873	MALE CONNECTOR / AB FITTING / #8x1/2NPT-M BR	2				
76	501796	BULKHEAD COUPLING / PIPE FITTING / 1/2NPT-Fx1/2NPT-Fx1 1/2 BR	2				
77	501424	NIPPLE / PIPE FITTING / 1/2NPT-Mx1/2NPT-Mx1 1/8 BR	2				
78	900323	NIPPLE / QUICK DISCONNECT "B SERIES" / #10x1/2NPT-F BR	2				A
78	900323	NIPPLE / QUICK DISCONNECT "B SERIES" / #10x1/2NPT-F BR	1				B
79	900326	DUST CAP / QUICK DISCONNECT "B SERIES" / #10 VINYL	2				A

From Y-7046 To 6-8906		Date:07/2024	PAGE:Y2-2330-00

WATER & SUMP TANK - INSTALLATION

Item#	Part	Description	XLII 45	XLII MTH40	XLII MTH45	XLII MTH45E	NOTES
79	900326	DUST CAP / QUICK DISCONNECT "B SERIES" / #10 VINYL	1				B
80	900325	DUST PLUG / QUICK DISCONNECT "B SERIES" / #8 VINYL	1				B
81	900324	COUPLER / QUICK DISCONNECT "B SERIES" / #8x1/2NPT-F BR	1				B
82	501791	NEEDLE VALVE 3/8 TUBE 3/8 TUBE	1				
83	952625	CLAMP / 3/8" I.D.	AR				
84	500641	SCREW TP PAN PH #8x3/4 Z050	AR				
85	503404	TUBE, NYLON 3/8 O.D. / BLACK S.L.	AR				
86	402917	DRAIN VALVE ASSY / WATER TANK	1				
87	401253	. SEAL, PLASTIC 3/4" I.D.	1				
88	501330	. STREET ELBOW 45º / PIPE FITTING / 3/8NPT-Mx3/8NPT-F BR	1				
89	501531	. DRAIN VALVE 3/8 NPT M x 5/8 HOSE	1				
90	501534	. BUSHING REDUCER / PIPE FITTING / 1/2NPT-Mx3/8NPT-F BR	1				
91	504019	HOSE CLAMP / 9/16"-1"1/16 SS / HS-10	1				
92	900220	TUBE PVC / 5/8" I.D. / S.L.	AR				
94	401131	PLATE ATTACH To 1-7702	1				
95	562018	HEATER, WATER To 1-7702	1				
96	**Y2-2327-00**	**SUMP TANK - PLASTIC**					
NS	680098	THREAD SEALANT LOCTITE #567 / WHITE / 250ml	AR				
		A) CANADA OPTION					
		B) USA OPTION					

From Y-7046 To 6-8906		Date:07/2024	PAGE:Y2-2337-00
LAVATORY FAN - INSTALLATION			

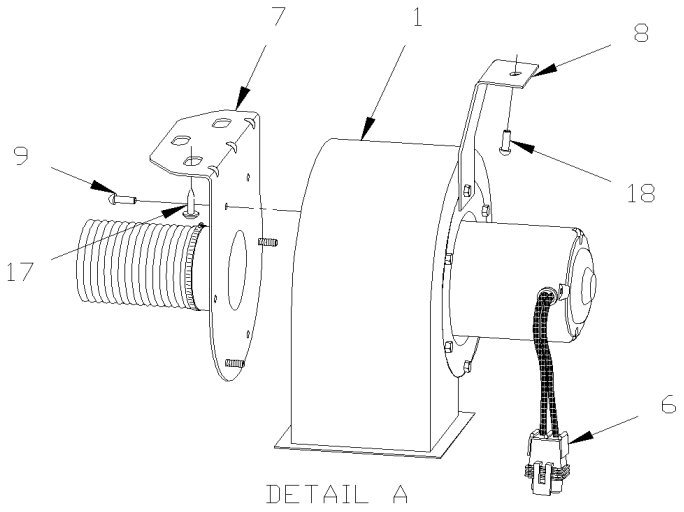

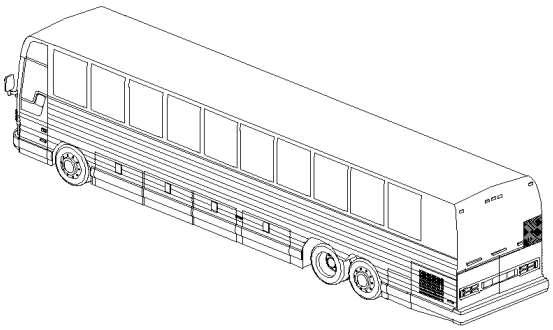

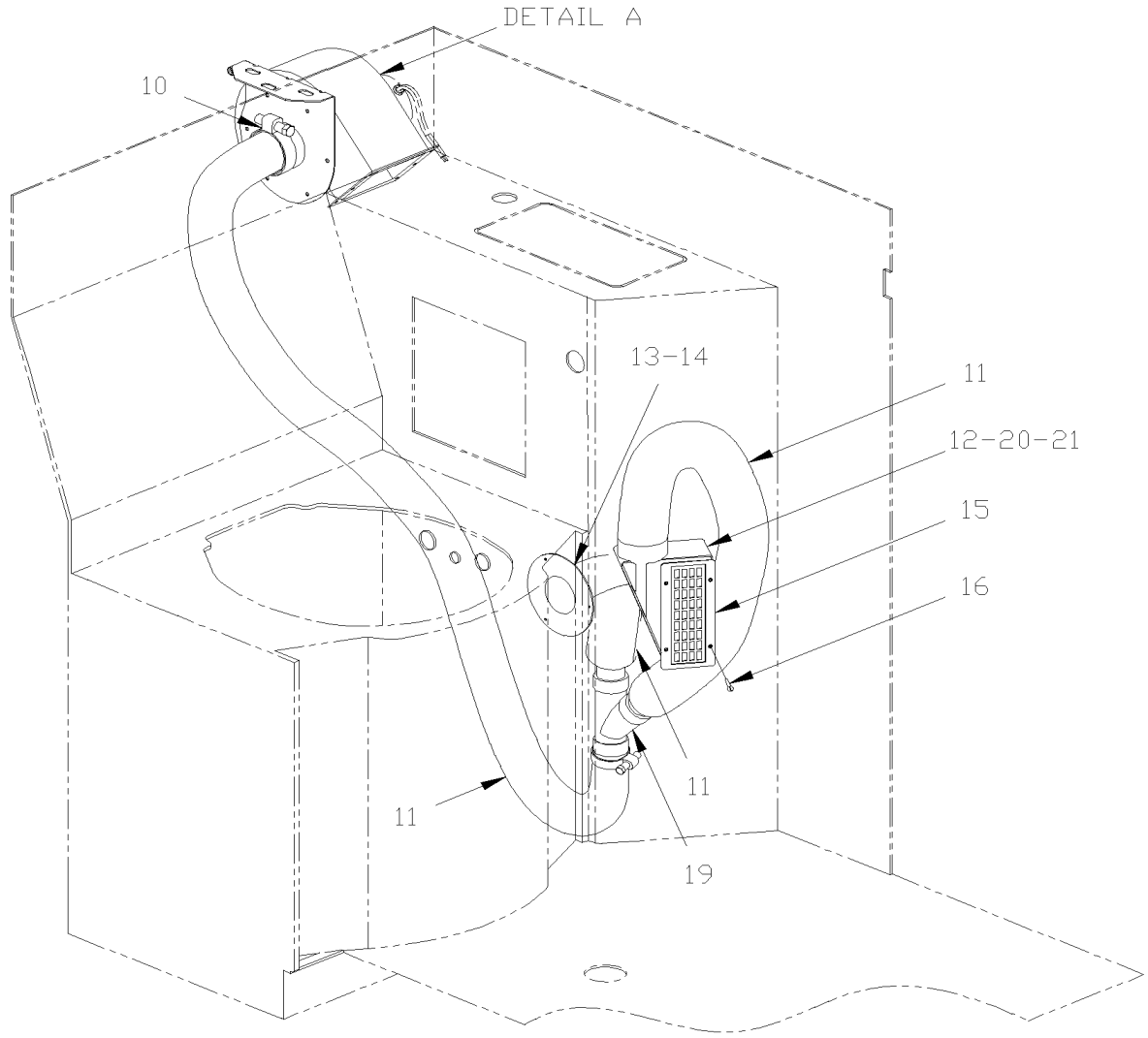

From Y-7046 To 6-8906		Date:07/2024	PAGE:Y2-2337-00

LAVATORY FAN - INSTALLATION

Item#	Part	Description	XLII 45	XLII MTH40	XLII MTH45	XLII MTH45E	NOTES
	405002	BLOWER ASSY LAVATORY	1				
1	**870844**	**. BLOWER & MOTOR ASSY - "M.C.C." "CW" / FAN END**					
6	561566	. CONNECTOR / WEATHER PACK / PH 2C / BLACK / PED 12010973	1				
6	561568	. PIN TERMINAL / 16-14 / PED 12089305	2				
6	561786	. CABLE SEAL / GRAY / PED 15324980	2				
7	405030	. SUPPORT / FLANGE SIDE	1				
8	403650	. SUPPORT / MOTOR SIDE	1				
9	504272	. RIVET CHY Q BRAZ 3/16x1/8 SS	3				
10	504024	HOSE CLAMP / 1"13/16"-2"3/4 SS / HS-36	2				
11	372344	HOSE 2 1/2" I.D. X 32"	1				
11	503031	HOSE FLEXIBLE / AIR DUCT 2 1/2" I.D. X 12`/ RUBBER	AR				
12	372366	BOX ASSY	1				
13	400632	FLANGE HOSE ADAPTOR / FIXED TO LAVATORY	1				
14	504108	RIVET POP DOME OE 1/8x1/2 AL	3				
15	404103	GRILLE 160MM X 70MM SS To 5-8512	1				
15	405700	GRILLE 160MM X 70MM SS From 5-8513	1				
16	500638	SCREW TP PAN PH #8x1/2 Z050	4				
17	500524	SCREW TP PAN PH #12x5/8 SS	3				
18	500611	SCREW TC PAN PH #10-24x1/2 Z050	1				
19	372762	Y TUBE ASSY / AIR DEFLECTOR	1				
20	504006	RIVET POP CK OE 1/8x5/16 AL	4				
21	500437	WASHER FL .125x.375x.040 Z050	4				

From Y-7046 To 6-8906		Date:07/2024	PAGE:870844
BLOWER & MOTOR ASSY - "M.C.C." "CW" / FAN END			

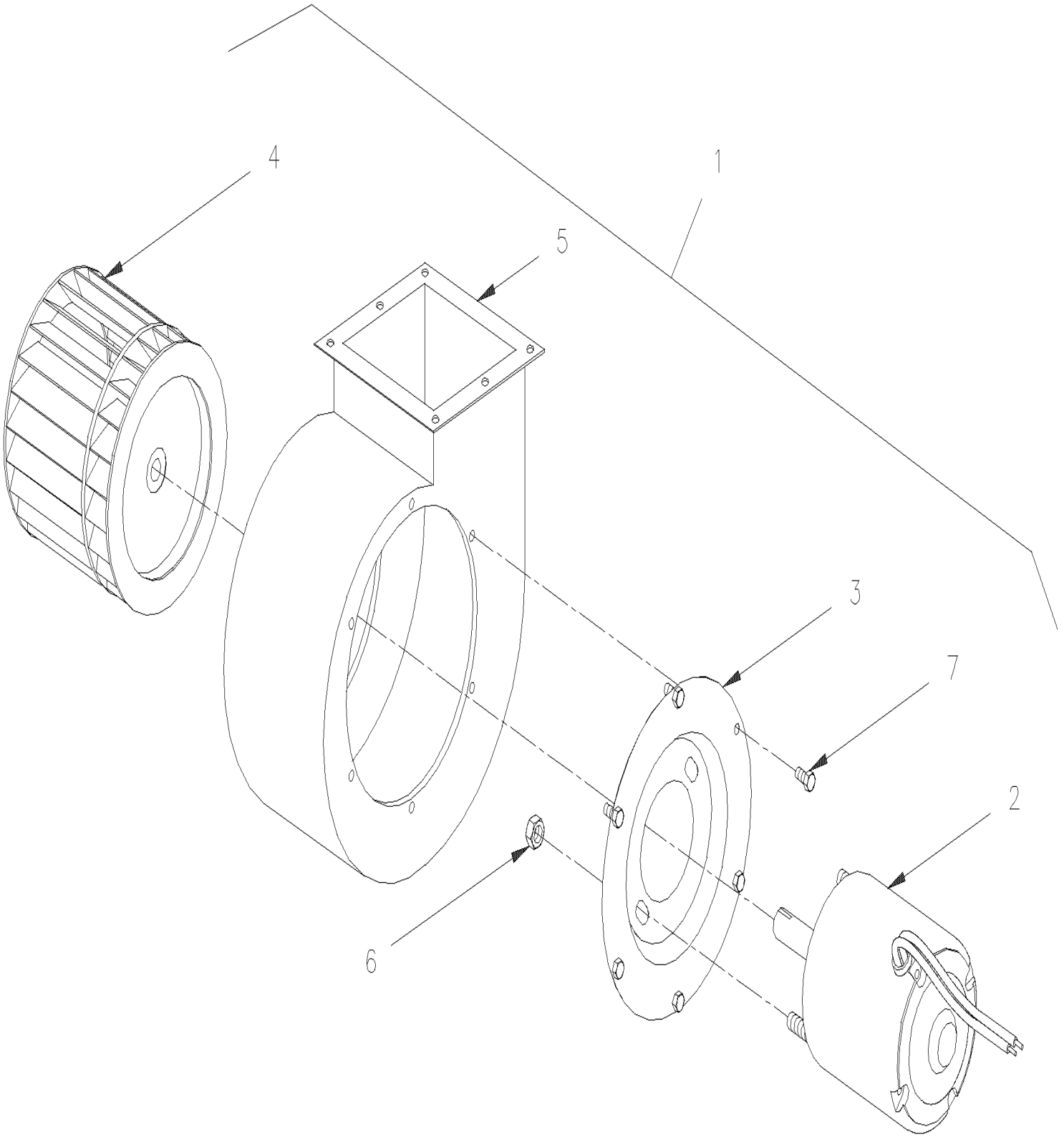

From Y-7046 To 6-8906		Date:07/2024	PAGE:870844

BLOWER & MOTOR ASSY - "M.C.C." "CW" / FAN END

Item#	Part	Description	XLII 45	XLII MTH40	XLII MTH45	XLII MTH45E	NOTES
1		BLOWER ASSY 24V / CW	1	1	1	1	
2	562167	. MOTOR ASSY / 24V	1	1	1	1	
3	871020	. PLATE MOUNTING / MOTOR	1	1	1	1	
4	871017	. BLOWER WHEEL / STEEL	1	1	1	1	
5	871440	. HOUSING BLOWER	1	1	1	1	
6	500786	. NUT HEX #10-24 Z050	2	2	2	2	
7	500978	. SCREW CAP HEX #10-24x3/4 Z050	6	6	6	6	

From Y-7046 To 6-8906		Date:07/2024	PAGE:Y2-2345-40
POWERVERTER - 24/110 VOLTS - 1000 WATTS			

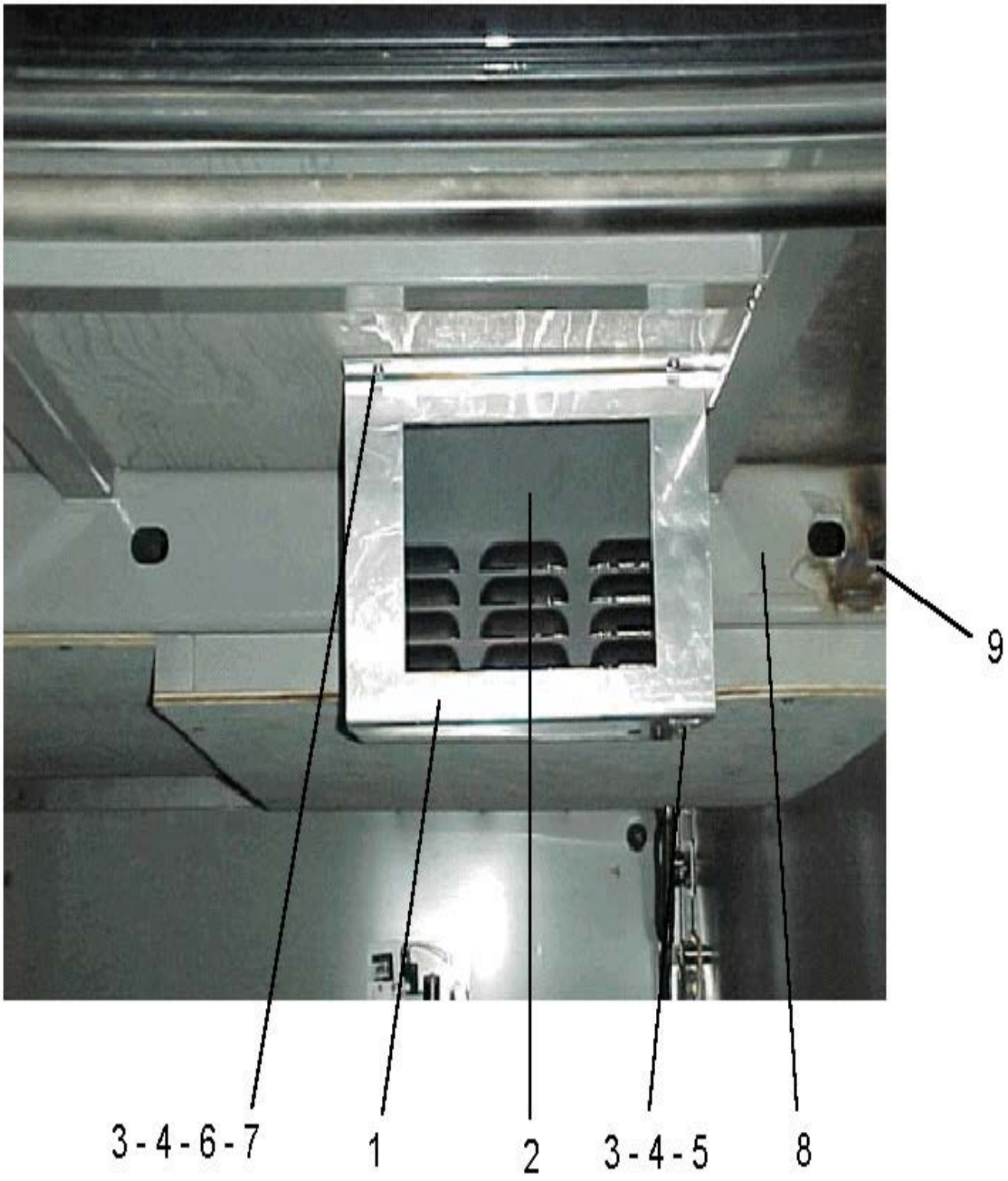

From Y-7046 To 6-8906		Date:07/2024	PAGE:Y2-2345-40

POWERVERTER - 24/110 VOLTS - 1000 WATTS

Item#	Part	Description	XLII 45	XLII MTH40	XLII MTH45	XLII MTH45E	NOTES
1	065456	SUPPORT, INVERTER	1				
2	562456	POWERVERTER ASSY / 24/110 V 1000 WATTS	1				A
3	500642	SCREW TP PAN PH #10x3/4 Z050	7				
4	500470	WASHER LO SPT .193x.334x.047 Z050	7				
5	500803	NUT SPR J #10A .035-.050	4				
6	502513	SCREW TP CAP HEX 5/16x1 Z050	3				
7	500476	WASHER LO SPT .317x.586x.078 Z050	3				
8	065458	CABLE MAIN	1				
9	504666	GROMMET / 1.000x1.375x.250x.625x1.750	1				
9	560933	CONNECTOR / 15 AMPS / HUBBELL 5266-C	AR				
9	562595	SPECIAL WIRE CABLE 14/3 / WHITE (BOAT CABLE)	AR				
9	562657	PLUG DOUBLE 110 VAC MURAL / WHITE	AR				
9	562659	COVER PLATE DOUBLE 110V OUTLET / WHITE	AR				
9	562661	RECEPTACLE BOX / 110Vac outlet WHITE	AR				
9	562664	PROTECTOR METALLIC 1"/CABLE	AR				
NS	065708	KIT, INVERTER REPLACEMENT / BAGGAGE COMPARMENT	1				
. NS	IS-01028	. SEE INSTRUCTION SHEET	1				
NS	065709	KIT, INVERTER REPLACEMENT / LOUNGE SEAT W/GALLEY	1				
. NS	IS-01028	. SEE INSTRUCTION SHEET	1				
		A) THIS POWERVERTER IS SUPERSEEDED BY KIT #065708 OR #065709					

From Y-7046 To 6-8906		Date:07/2024	PAGE:Y2-2345-41
POWERVERTER - 24/110 VOLTS - 5000 WATTS			

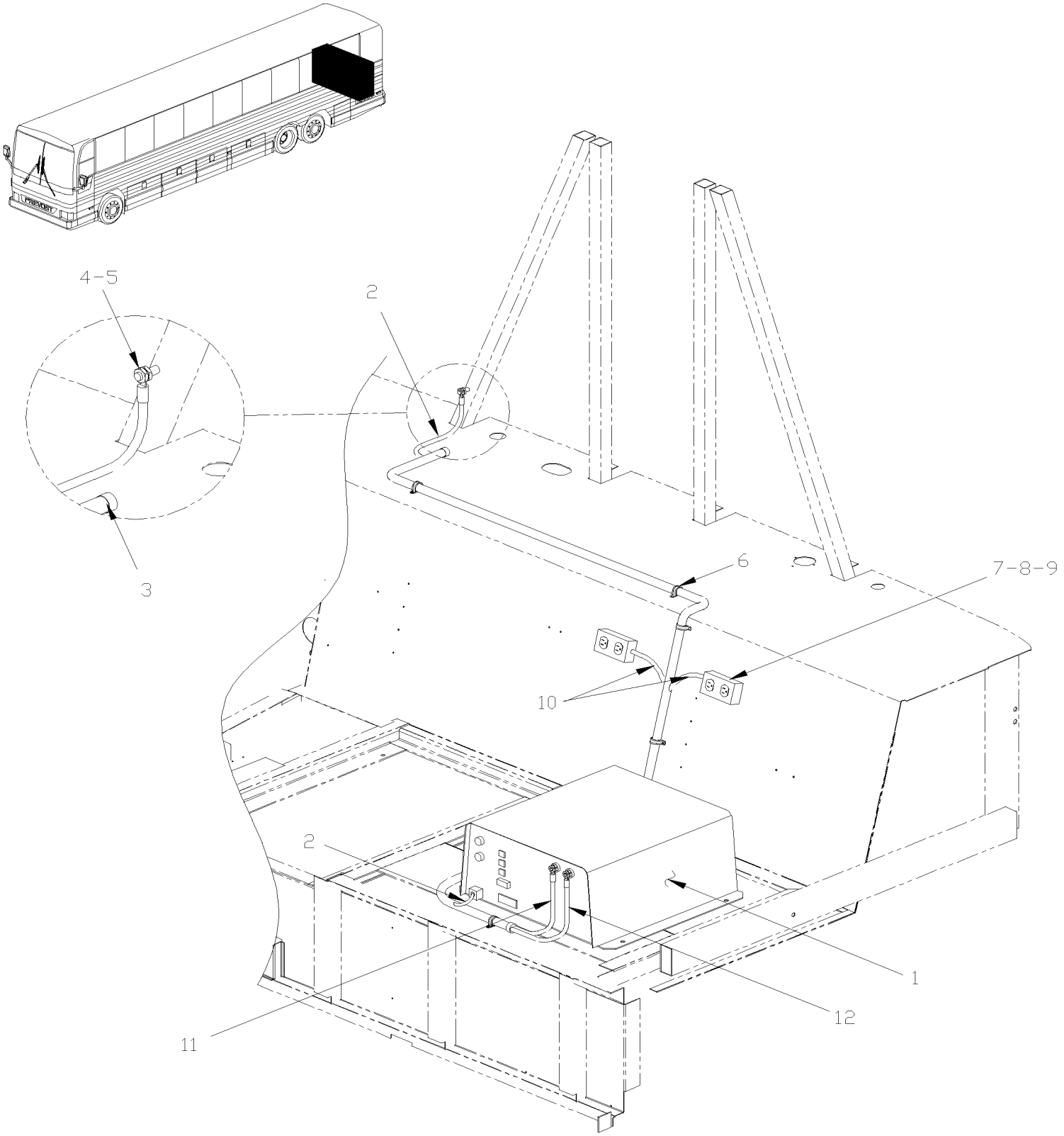

From Y-7046 To 6-8906		Date:07/2024	PAGE:Y2-2345-41

POWERVERTER - 24/110 VOLTS - 5000 WATTS

Item#	Part	Description	XLII 45	XLII MTH40	XLII MTH45	XLII MTH45E	NOTES
1	562567	POWERVERTER ASSY / 24/110 V 5000 WATTS	1				
2	065740	CABLE ASSY	1				
3	504059	GROMMET / 1.250x1.500x.094x.375x1.875	1				
4	500998	NUT HEX 1/2-13 BR	1				
5	500482	WASHER LO SPT .506x.873x.125 Z050	1				
6	952639	CLAMP / 1"1/4 I.D.	7				
7	562657	PLUG DOUBLE 110 VAC MURAL / WHITE	2				
8	562659	COVER PLATE DOUBLE 110V OUTLET / WHITE	2				
9	562661	RECEPTACLE BOX / 110Vac outlet WHITE	2				
10	562595	SPECIAL WIRE CABLE 14/3 / WHITE (BOAT CABLE)	AR				
11	065738	CABLE ASSY / SWITCH TO INVERTER / # 24P2	1				A
11	065809	CABLE ASSY / SWITCH TO INVERTER / # 24P2	1				B
12	065739	CABLE ASSY / BATTERIES TO INVERTER / 0A	1				A
12	065810	CABLE ASSY / BATTERIES TO INVERTER / 0A	1				B
NS	**Y2-0615-10**	**BATTERIES COMPARTMENT PANEL**	1	1	1	1	
		A) AS SHOW WITH INVERTER INSTALLATION ON LOUNGE SEAT					
		B) WITH INVERTER INSTALLATION IN 4TH BAGGAGE COMPARTEMENT					

From Y-7046 To 6-8906		Date:07/2024	PAGE:Y2-2345-42
POWERVERTER - 24/110 VOLTS - 1800 WATTS			

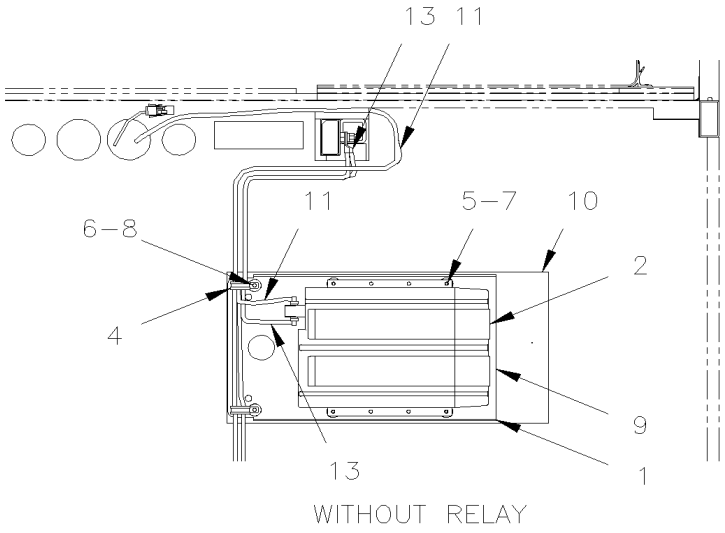

WITHOUT RELAY

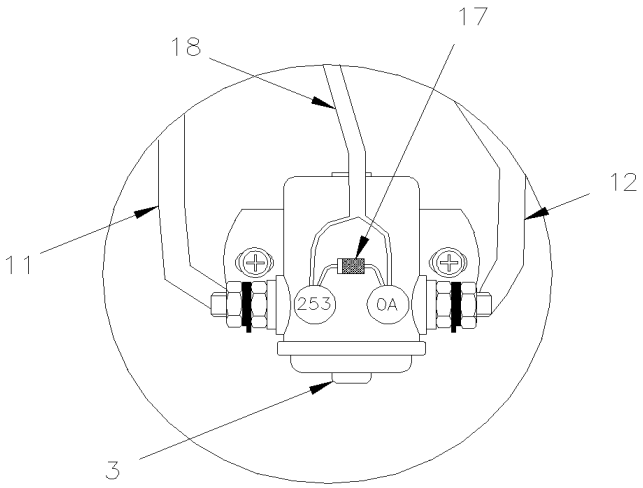

DETAIL A

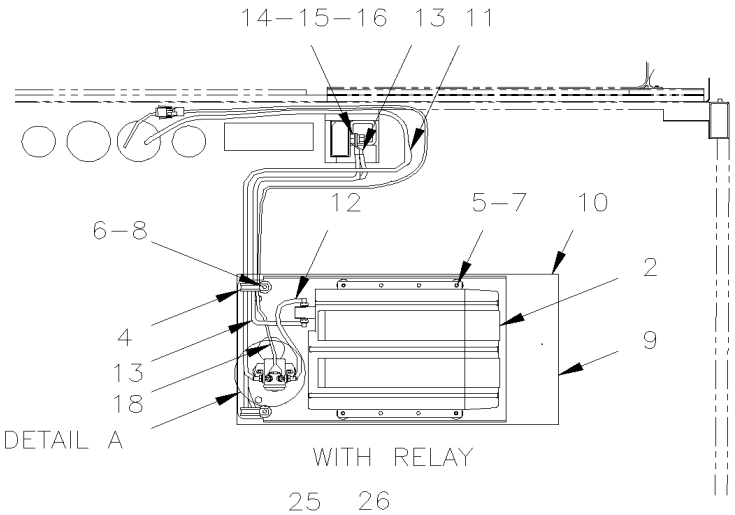

DETAIL A

WITH RELAY

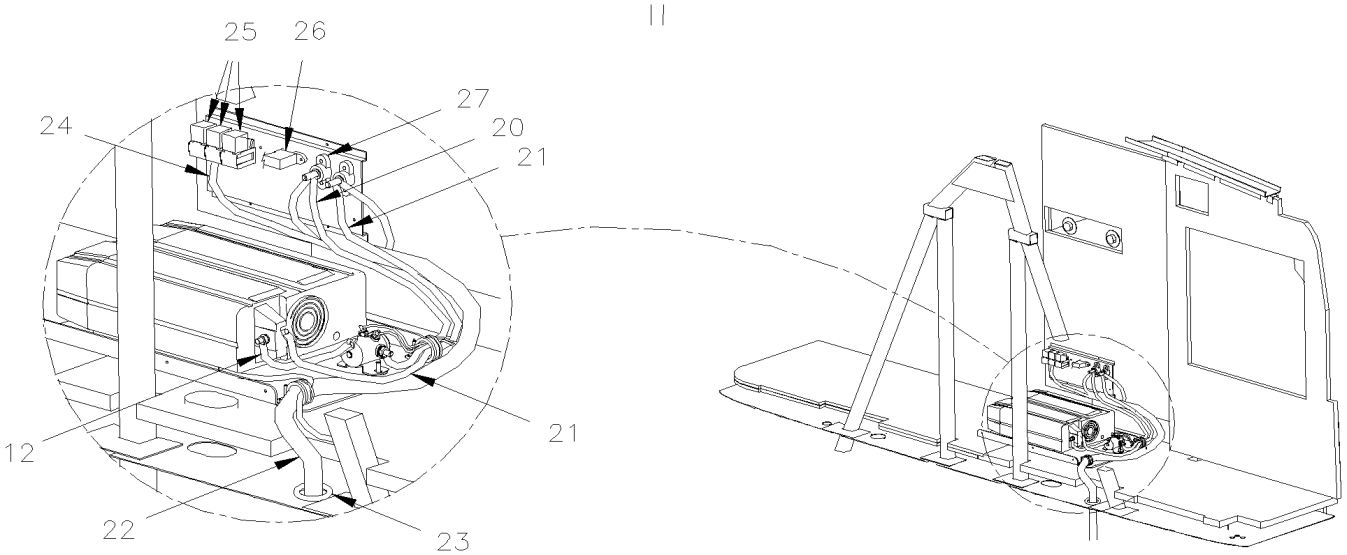

From Y-7046 To 6-8906		Date:07/2024	PAGE:Y2-2345-42

POWERVERTER - 24/110 VOLTS - 1800 WATTS

Item#	Part	Description	XLII 45	XLII MTH40	XLII MTH45	XLII MTH45E	NOTES
1	065519	INVERTER, SUPPORT	1				
2	563082	POWERVERTER ASSY / 24/110 V 1800 WATTS W/DISPLAY ON INVERTER	1				
3	561005	SWITCH MAGNETIC / 24V S.P.S.T. / 200AMPS N.O.	1				
4	952637	CLAMP / 1"1/16 I.D.	2				
5	5001182	NUT HEX NYRT M6-1.0 SS	6				
6	500590	NUT HEX NYRT M4-0.7 Z050	2				
7	502573	WASHER FL 6.4x12.5x1.6 SS	6				
8	502637	WASHER FL .200x.437x.037 SS	2				
9	563131	POWERVERTER, COVER	1				
10	500572	SCREW MA TR PH #10-24x1/2 SS BK	6				
11	065811	CABLE	1				
12	065540	CABLE ASSY #4 x 250MM	1				
13	065542	CABLE ASSY #4 x 1750MM	1				
14	5001330	SCREW CAP HEX 1/2-13x1 SS	1				
15	500998	NUT HEX 1/2-13 BR	1				
16	500482	WASHER LO SPT .506x.873x.125 Z050	1				
17	060798	DIODE ASSY	1				
18	065531	CABLE INVERTER	1				
20	065707	CABLE ASSY #24PV	1				
21	065706	CABLE ASSY #0	1				
24	065018	CABLE ASSY W/LIGHT SWITCH	1				A
24	065705	CABLE ASSY / W/REAR GALLEY RELAY	1				B
25	561707	RELAY 24V S.P.D.T. W/RESISTOR / To 5-8577	3				
25	563332	RELAY 24V S.P.D.T. W/RESISTOR / "VOLVO" (20374662) From 5-8578	3				
27	560422	BLOCK, TERMINAL / 1 STUD 3/8-16 / BLACK	2				
		A) WITH ICE BOX					
		B) WITH FRIGO					

From Y-7046 To 6-8906		Date:07/2024	PAGE:Y2-2345-43
110 VOLT - OUTLET			

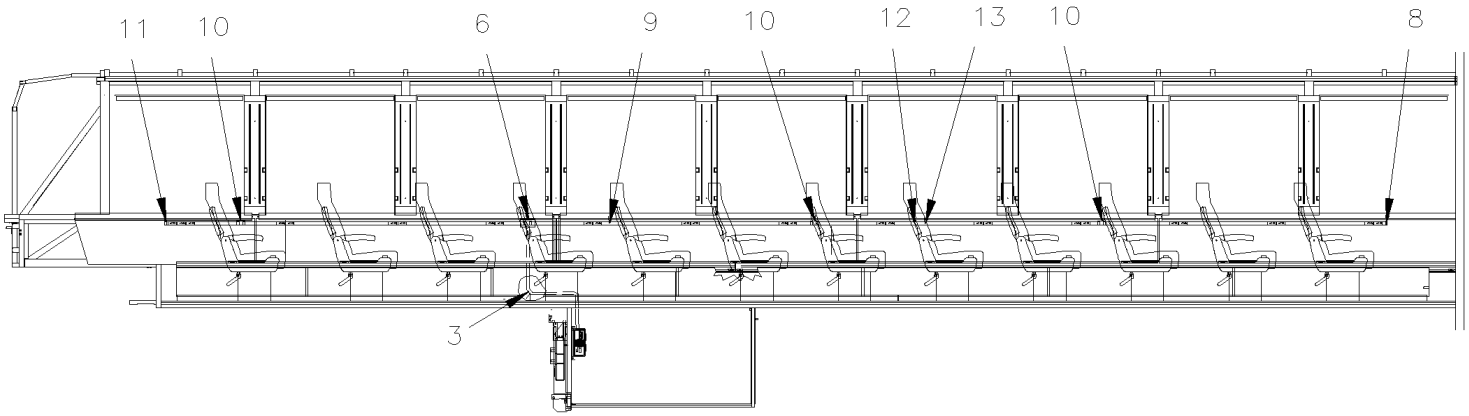

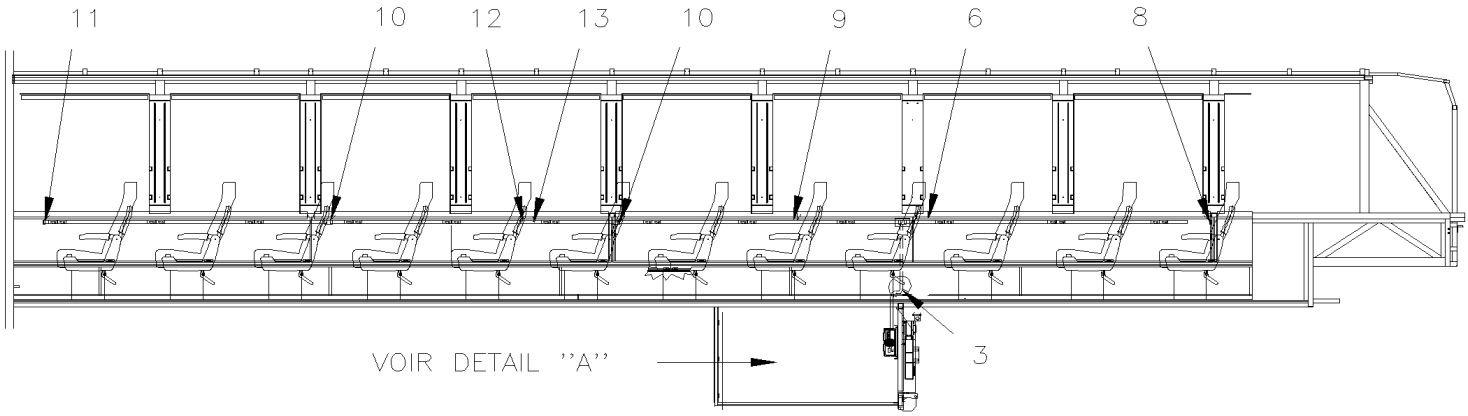

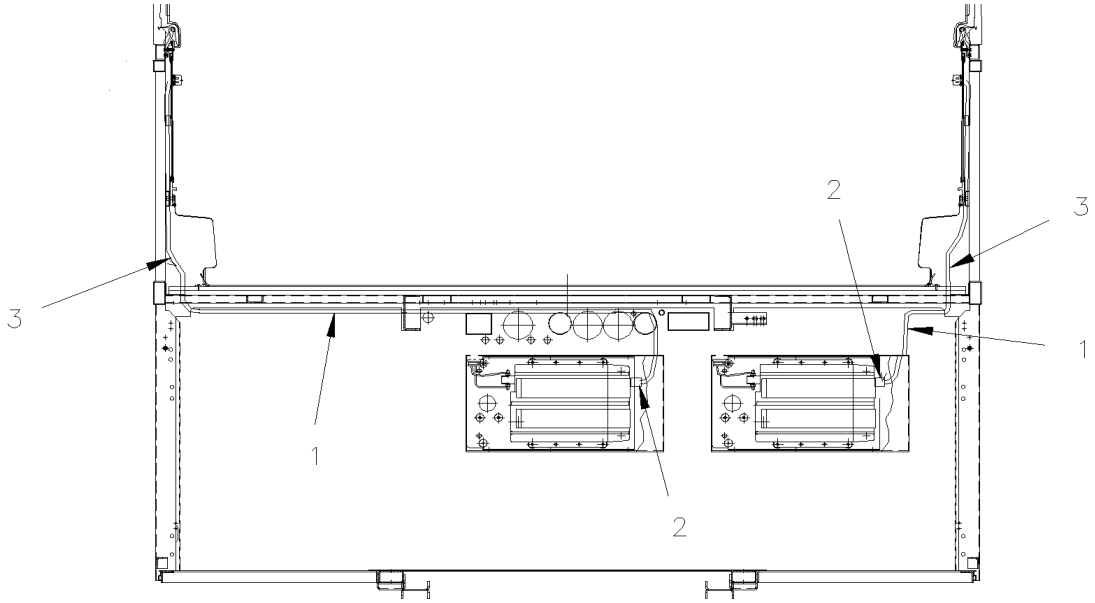

DETAIL ''A''

From Y-7046 To 6-8906		Date:07/2024	PAGE:Y2-2345-43

110 VOLT - OUTLET

Item#	Part	Description	XLII 45	XLII MTH40	XLII MTH45	XLII MTH45E	NOTES
1	562664	PROTECTOR METALLIC 1"/CABLE	AR				
2	560933	CONNECTOR / 15 AMPS / HUBBELL 5266-C	2				
3	562595	SPECIAL WIRE CABLE 14/3 / WHITE (BOAT CABLE)	AR				
6	563098	STARTER, 110V FEEDER HATRD WIRED	2				
8	563146	COVER, END TRACK	2				
9	563100	RECEPTACLE 110V	AR				
10	563101	CONNECTOR STRAIGHT TRACK	5				
11	563102	TRACK END CAP	2				
12	563099	TRACK 110V 96"	9				
13	563103	COVER, TRACK	12				

From Y-7046 To 6-8906		Date:07/2024	PAGE:Y2-2345-99
110 VOLT - OUTLET / "RETROFIT"			

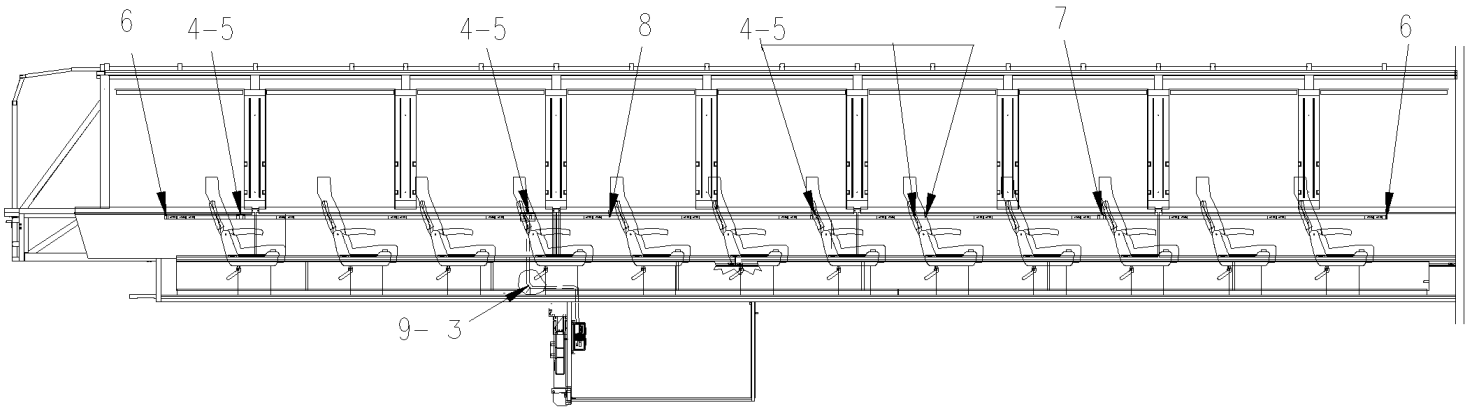

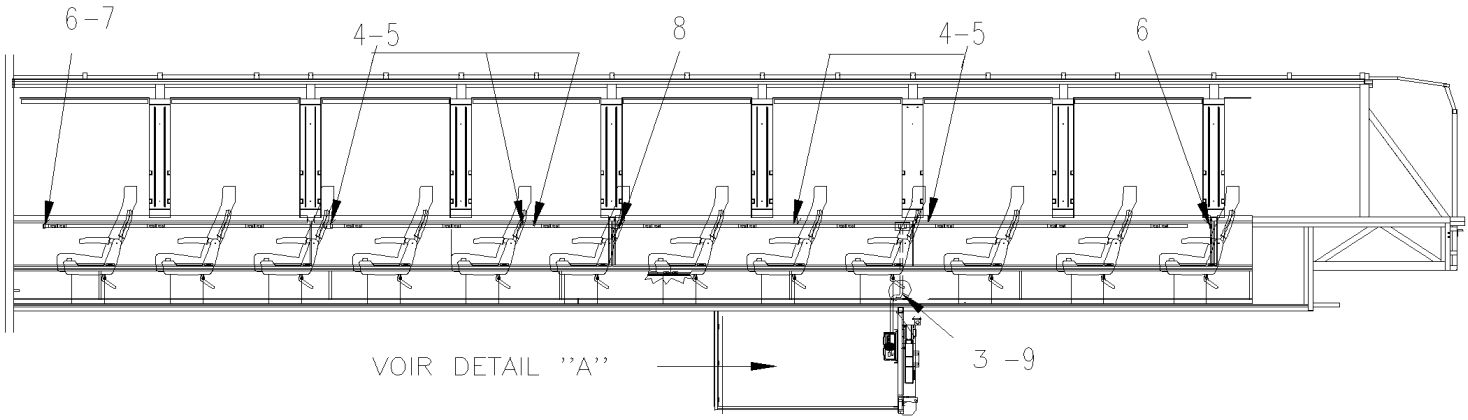

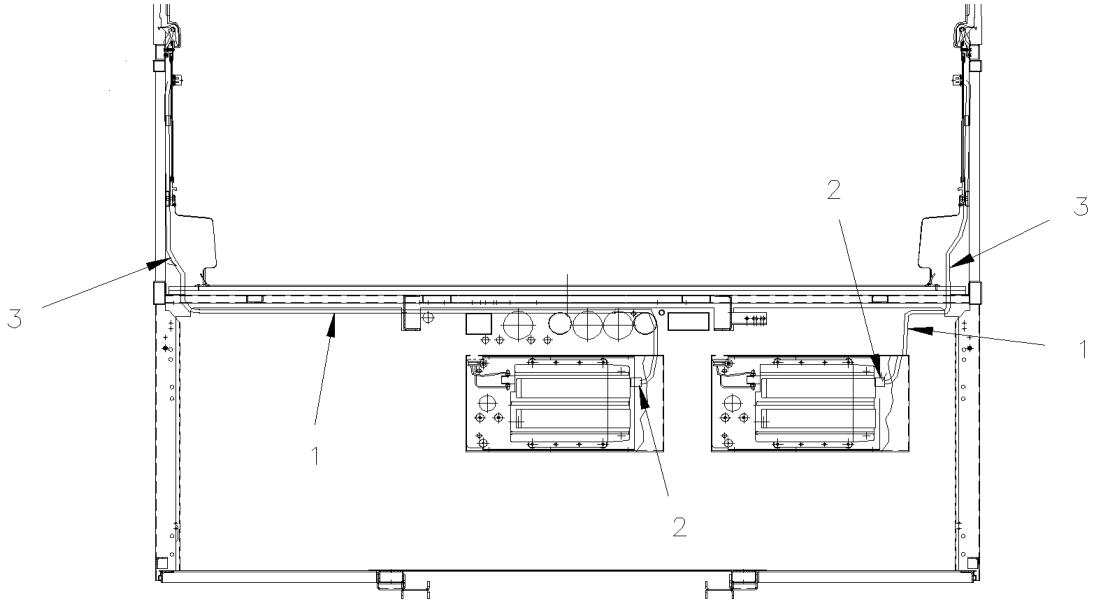

DETAIL ''A''

From Y-7046 To 6-8906		Date:07/2024	PAGE:Y2-2345-99

110 VOLT - OUTLET / "RETROFIT"

562657

WHITE

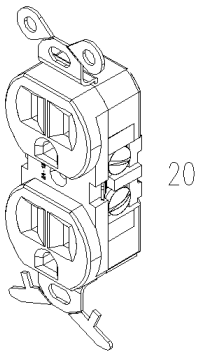

PLUG DOUBLE
OUTLET 110V

562659

WHITE

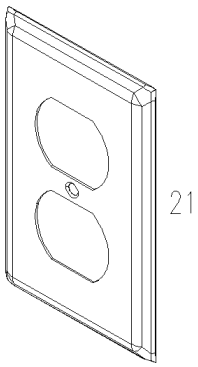

PLATE OUTLET 110V

564129

WHITE

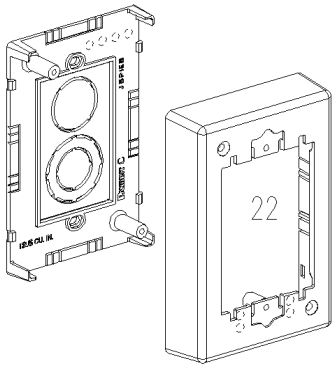

RECEPTACLE BOX
OUTLET 110V

564467

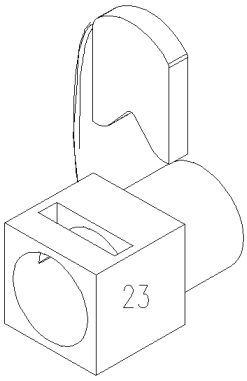

CONNECTOR IBERVILLE

563624

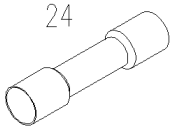

563848

WHITE

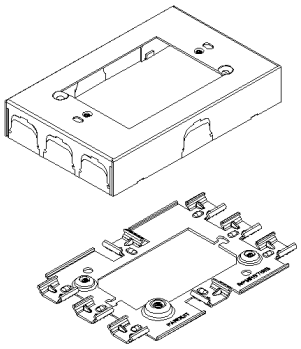

RECEPTACLE BOX
OUTLET 110V

563846

WHITE

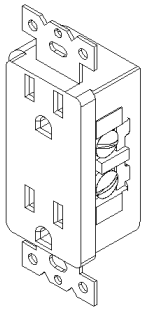

PLUG DOUBLE
OUTLET 110V

563847

WHITE

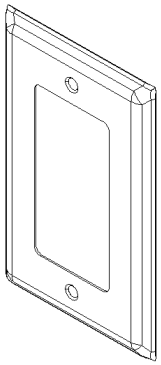

PLATE OUTLET 110V

From Y-7046 To 6-8906		Date:07/2024	PAGE:Y2-2345-99

110 VOLT - OUTLET / "RETROFIT"

564151

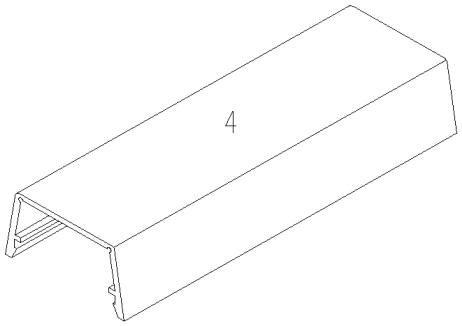

COVER ALUMINIUM
RACEWAY 110V

564152

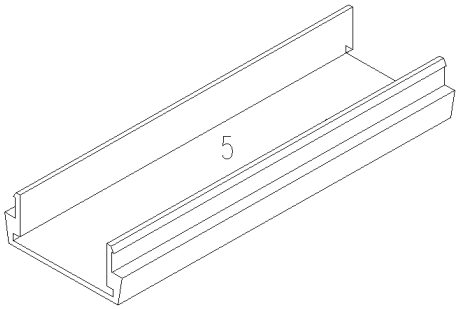

BASE ALUMINIUM
RACEWAY 110V

564153

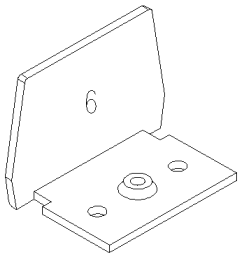

BLANK END FITTING
RACEWAY 110V

564154

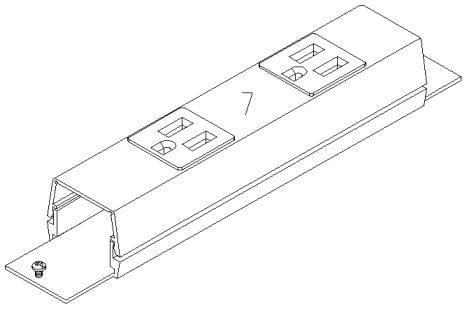

RECEPTACLE DOUBLE
RACEWAY 110V

564155

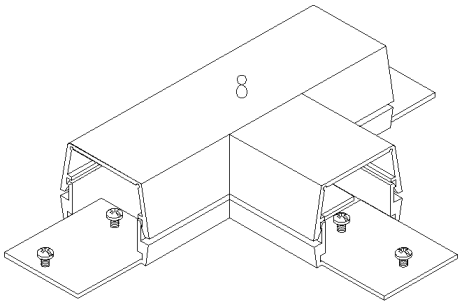

TEE
RACEWAY 110V

564156

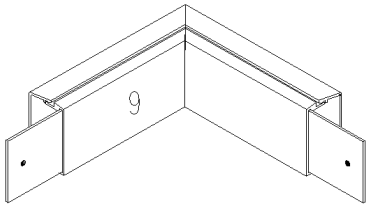

ELNOW
RACEWAY 110V

From Y-7046 To 6-8906		Date:07/2024	PAGE:Y2-2345-99

110 VOLT - OUTLET / "RETROFIT"

Item#	Part	Description	XLII 45	XLII MTH40	XLII MTH45	XLII MTH45E	NOTES
1	562664	PROTECTOR METALLIC 1"/CABLE	AR				
2	560933	CONNECTOR / 15 AMPS / HUBBELL 5266-C	AR				
3	562595	SPECIAL WIRE CABLE 14/3 / WHITE (BOAT CABLE)	AR				
3	N.P.N.	WIRE CABLE GA 16/3					4
4	564151	RACEWAY BASE ALUMINUM 60"	AR				
5	564152	RACEWAY COVER ALUMINUM 60"	AR				
6	564153	BLANK END FITTING CLOSING	AR				
7	564154	RECEPTACLE DOUBLE / IN-LINE 15 Amps	AR				
8	564155	TEE ALUMINUM RACEWAY	AR				
9	564156	ELBOW 90° EXTERNAL RACEWAY	AR				
20	562657	PLUG DOUBLE 110 VAC MURAL / WHITE	AR				
21	562659	COVER PLATE DOUBLE 110V OUTLET / WHITE	AR				
22	564129	RECEPTACLE BOX / 110Vac outlet / WHITE	AR				
22	563848	RECEPTACLE BOX / 100Vac outlet WHITE NYLON	AR				
23	564467	CONNECTOR IBERVILLE 1/2" PLASTIC GREY	AR				
24	563624	BUTT SPLICE / 12-10 / YELLOW / W/THERMORETRAC / PANDUIT BSH10-E	AR				
25	563846	PLUG DOUBLE 110 VAC MURAL WHITE NYLON "DECORA"	AR				
26	562662	PLUG DOUBLE 110 VAC MURAL WHITE NYLON "DECORA"	AR				
26	563847	COVER PLATE DOUBLE 110V OUTLET WHITE NYLON	AR				
26	564507	PLUG DOUBLE 110 VAC MURAL W/2 USB PORT GREY NYLON "DECORA"	AR				
27	563847	COVER PLATE DOUBLE 110V OUTLET WHITE NYLON	AR				
27	564508	COVER PLATE DOUBLE 110V OUTLET SILVER	AR				
		4) NO PARTS NUMBER					

From Y-7046 To 2-7764		Date:07/2024	PAGE:Y2-2350-10
WATER HEATER - INSTALLATION			

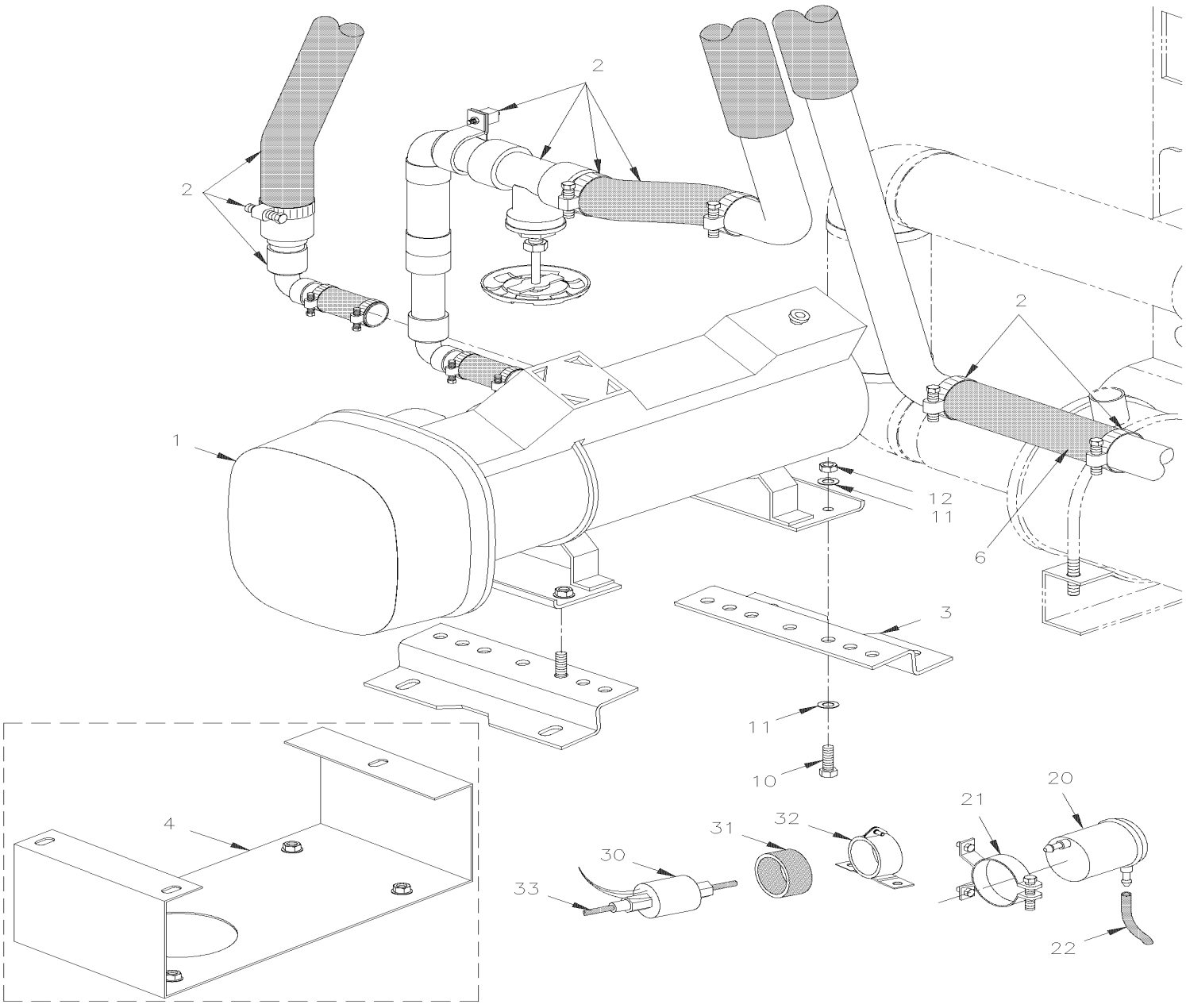

From Y-7046 To 2-7764		Date:07/2024	PAGE:Y2-2350-10

WATER HEATER - INSTALLATION

Item#	Part	Description	XLII 45	XLII MTH40	XLII MTH45	XLII MTH45E	NOTES
1	**871036**	**WATER HEATER - "WEBASTO" 80,000 B.T.U. From Y-7046 To 2-7764**					
1	**871085**	**WATER HEATER - "WEBASTO" 45,000 B.T.U. From Y-7046 To 2-7764**					
1	**871097**	**WATER HEATER - "ESPAR" 41,000 B.T.U. From Y-7046 To 2-7764**					
1	**871100**	**WATER HEATER - "PROHEAT" 80,000 B.T.U. From Y-7257 To 4-8464**					
1	063399	WIRING HARNESS W/"EXPAR"	1				
2	**Y2-2222-00**	**HEATER LINE REAR SECTION - BUS**					
4	373765	BOX SUPPORT / W/80000 BTU "PROHEAT" To Y-7256	1				
4	373777	BOX SUPPORT / W/80000 BTU "PROHEAT" From Y-7257	1				
10	502780	SCREW CAP HEX M8-1.25x25 SS BK	4				
11	500874	WASHER FL 8.4x17.0x1.6 Z050	4				
12	502744	NUT HEX STO M8-1.25 Z050	4				
20	871037	FILTER, FUEL	1				
21	871038	SUPPORT, FILTER FUEL	1				
22	503411	HOSE / 2556 / #4 X 50'	AR				
31	870972	RING, RUBBER	1				
32	870971	SUPPORT, PUMP	1				
33	870977	HOSE 3.2MM I.D. 25' / S.L.	AR				

From Y-7046 To 2-7764		Date:07/2024	PAGE:871036
WATER HEATER - "WEBASTO" 80,000 B.T.U.			

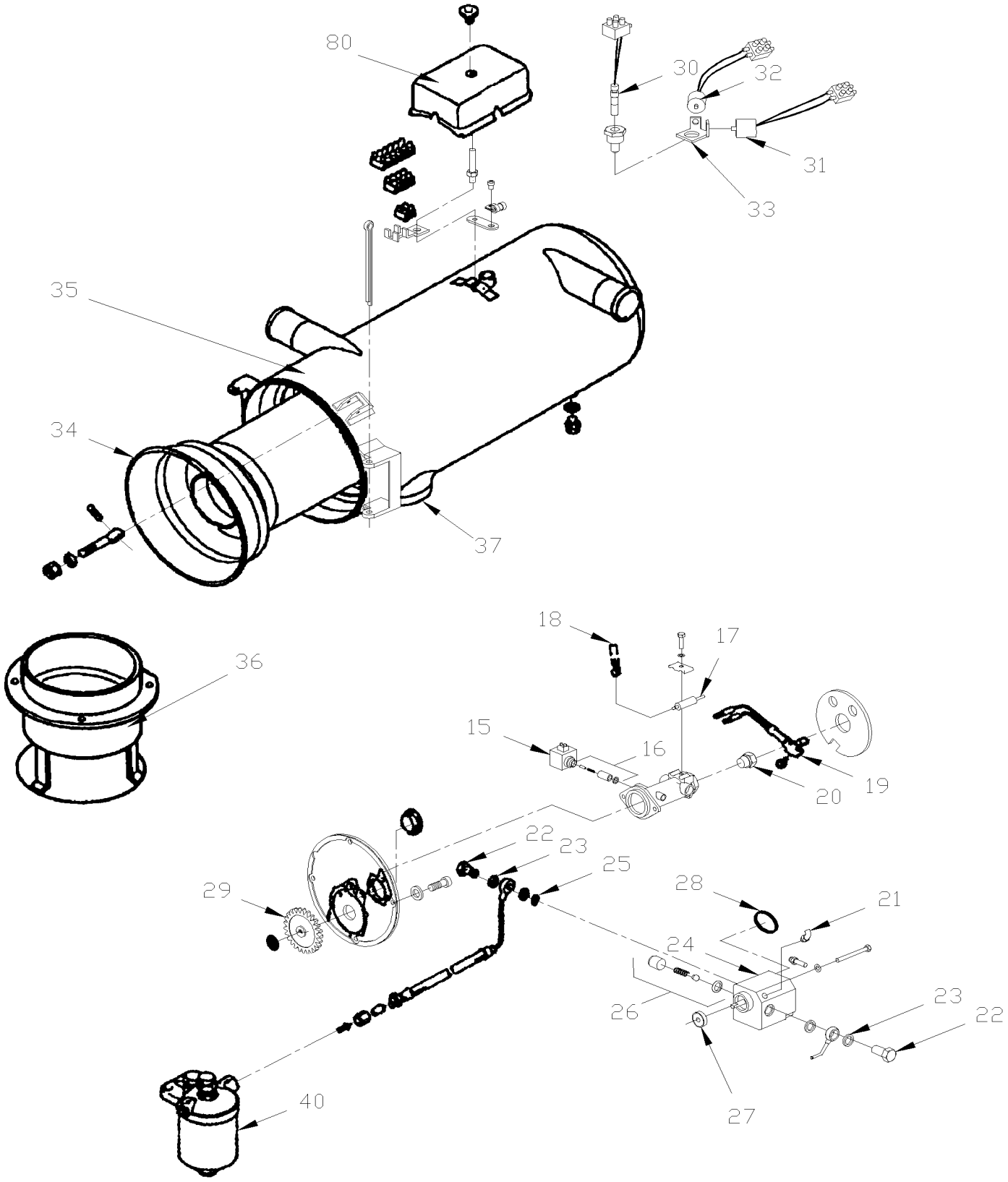

From Y-7046 To 2-7764		Date:07/2024	PAGE:871036
WATER HEATER - "WEBASTO" 80,000 B.T.U.			

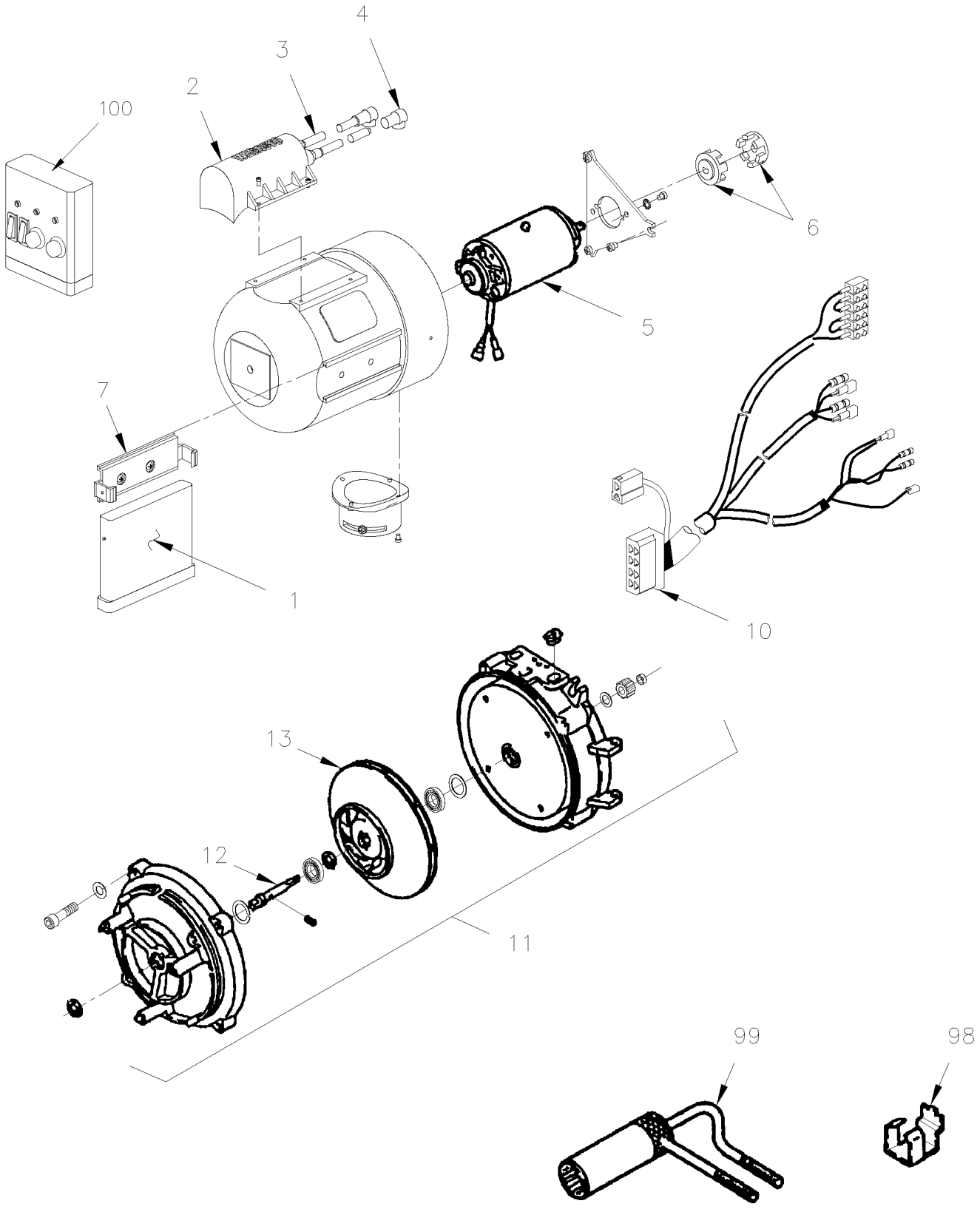

From Y-7046 To 2-7764		Date:07/2024	PAGE:871036

WATER HEATER - "WEBASTO" 80,000 B.T.U.

Item#	Part	Description	XLII 45	XLII MTH40	XLII MTH45	XLII MTH45E	NOTES
		WATER HEATER - "WEBASTO" 80,000 B.T.U.	1	1	1	1	
	N25810	WATER HEATER - "WEBASTO" 80,000 B.T.U.					
NS	871309	BURNER HEAD ASSY 24V / DBW 2020	1	1	1	1	
1	870909	. CONTROL UNIT 24V	1	1	1	1	A
. NS	561186	. . CONNECTOR / FASTIN-FASTON (.250) / RH 6C / AMP 925276-0	1	1	1	1	A
. NS	561597	. . CONNECTOR / 56 SERIES / TAB RH 2C / BROWN / PED 2965981	1	1	1	1	A
. NS	562363	. . CONNECTOR / FASTIN-FASTON (.250) / RH 8C / AMP 163007	1	1	1	1	A
2	870910	. COIL, IGNITION	1	1	1	1	
3	870911	. . SOCKET	2	2	2	2	
4	870912	. . CABLE, HIGH TENSION / S.L.	AR	AR	AR	AR	
5	870913	. MOTOR ASSY / 24V	1	1	1	1	
6	870939	. CLUTCH	2	2	2	2	
7	N8883051	. CLIP CONTROL UNIT	1	1	1	1	
10	870914	. WIRING HARNESS / W/TERMINAL BLOCK 6 C	1	1	1	1	
11	870915	. KIT, MOUNTING SHAFT	1	1	1	1	
12	870916	. SHAFT	1	1	1	1	
13	G1017453	. ROTOR TURBINE	1	1	1	1	
15	870917	. SOLONOID VALVE / 24V	1	1	1	1	
16	870919	. . UNLOADER POWER ASSY	1	1	1	1	
17	870920	. ELECTRODE, IGNITION	2	2	2	2	
18	870921	. PLUG / ELECTRODE	2	2	2	2	
19	870922	. CELL, PHOTOELECTRIC	1	1	1	1	
20	870918	. NOZZLE 0.80GPH	1	1	1	1	
20	871316	NOZZLE 0.35GPH	AR	AR	AR	AR	
20	871126	NOZZLE 0.40GPH	AR	AR	AR	AR	
20	192271	NOZZLE 0.65GPH / PACK OF 12	AR	AR	AR	AR	
20	G5007384	NOZZLE 0.65GPH	AR	AR	AR	AR	
20	G1017473	NOZZLE 0.65GPH	AR	AR	AR	AR	
20	871291	NOZZLE 0.85GPH	AR	AR	AR	AR	
21	870928	. PIPE, HIGH PRESSURE	1	1	1	1	
22	870929	. BANJO BOLT / M10-1.0	2	2	2	2	
23	870923	. BANJO WASHER / M10	4	4	4	4	
24	870930	. PUMP FUEL	1	1	1	1	
25	870924	. . FILTER	1	1	1	1	
26	870925	. . VALVE, PRESSURE CONTROL	1	1	1	1	
27	870926	. . GASKET	1	1	1	1	
28	870927	. . GASKET, RING	1	1	1	1	
29	870931	. SPUR GEAR	1	1	1	1	
30	870932	. FUSE THERMO 138°C (YELLOW)	1	1	1	1	
31	870933	. RELEASE, THERMO 117°C (GREEN)	1	1	1	1	
32	870934	. CONTROL THERMOSTAT 75°C GREEN & RED	1	1	1	1	
33	870935	. ANGLE BRACKET	1	1	1	1	

From Y-7046 To 2-7764		Date:07/2024	PAGE:871036

WATER HEATER - "WEBASTO" 80,000 B.T.U.

Item#	Part	Description	XLII 45	XLII MTH40	XLII MTH45	XLII MTH45E	NOTES
34	871057	. CHAMBER, COMBUSTION / W/80,000 BTU	1	1	1	1	
35	871251	. HEAT EXCHANGER	1	1	1	1	
36	870940	. PIPE, OUTLET	1	1	1	1	
37	871039	EXHAUST PIPE SS 70MM O.D. X 1000MM	1	1	1	1	
		SEE WATER HEATER - INSTALLATION					
80	N8883102	CAP	1	1	1	1	
98	870937	GAUGE / IGNITION ELECTRODE	1	1	1	1	
99	870938	BOX WRENCH / HIGH PRESSURE NOZZLE	1	1	1	1	
100	871319	TESTING GEAR TOOL	AR	AR	AR	AR	
NS	871246	KIT, RETROFIT W/HEATER CONTROL BOX WATERTIGHT	AR	AR	AR	AR	
NS	192273	KIT NOZZLE W/OVERHEAT FUSE / DBW 2020	AR	AR	AR	AR	B
NS	065744	KIT, RETROFIT BOX W/ENTENSION CABLE AND SUPP.	AR	AR	AR	AR	
NS	192274	KIT, MOTOR 24V W/BEARING, NOZZLE & O.H. FUSE / DBW 2020	AR	AR	AR	AR	
NS	192269	KIT, ELECTRICAL REBUILT COMPONENTS 24V / DBW 2020 & DBW 300	AR	AR	AR	AR	C
		A) FOR PRODUCT IMPROVMENT USE KIT #871246 FOTR EXTEND WIRE CABLE BETWEEN CONTROL BOX AND WATER HEATER OR USE KIT #065744 FOR FIXED UNIT CONTROL BOX IN WATERPROOF BOX					
		B) INCLUDES 2 ITEMS #20 & 30					
		C) INCLUDES ITEMS #1, 2, 3, 4, 10, 17, 19 & MORE					

From Y-7046 To 2-7764		Date:07/2024	PAGE:871085
WATER HEATER - "WEBASTO" 45,000 B.T.U.			

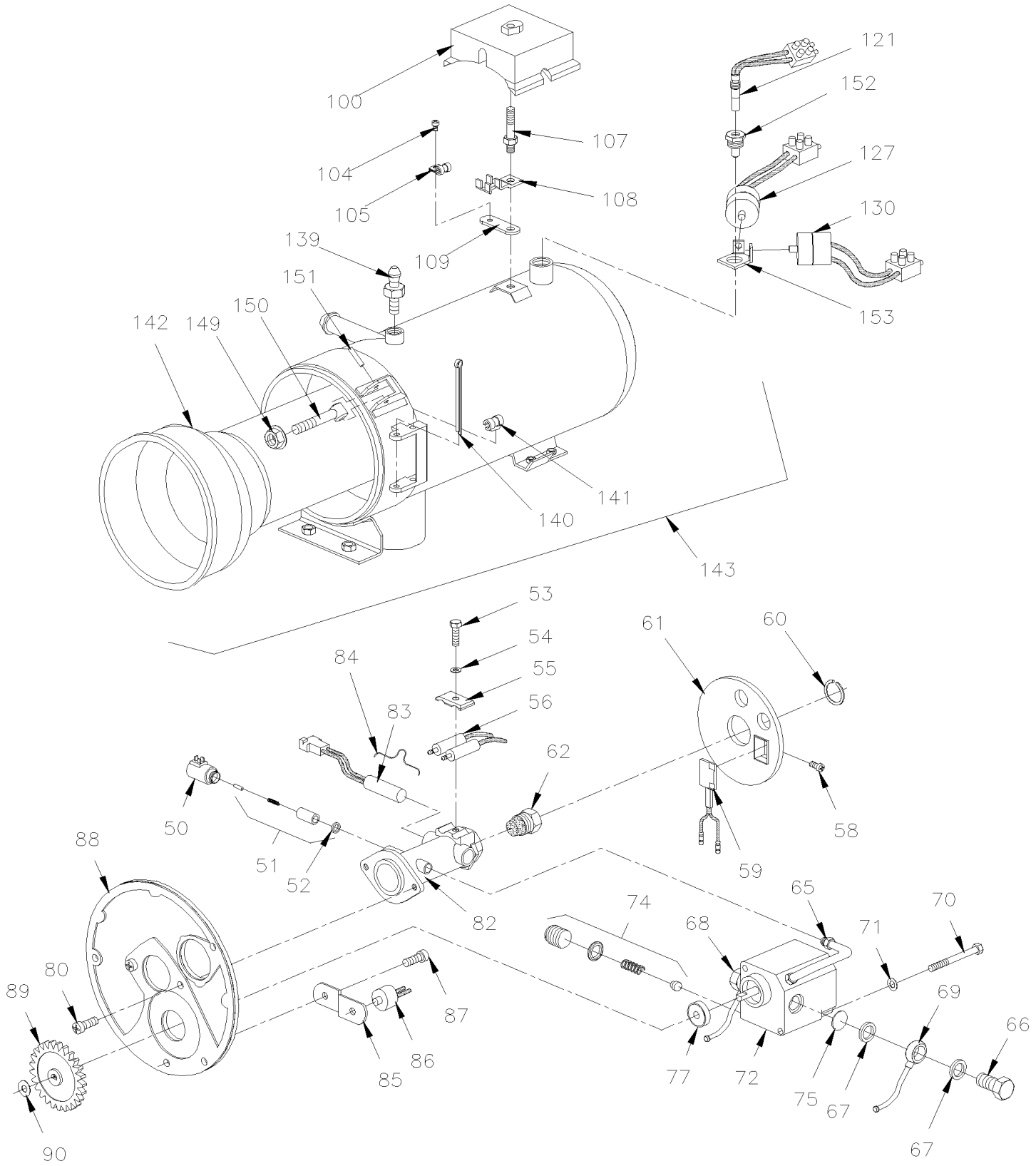

From Y-7046 To 2-7764		Date:07/2024	PAGE:871085
WATER HEATER - "WEBASTO" 45,000 B.T.U.			

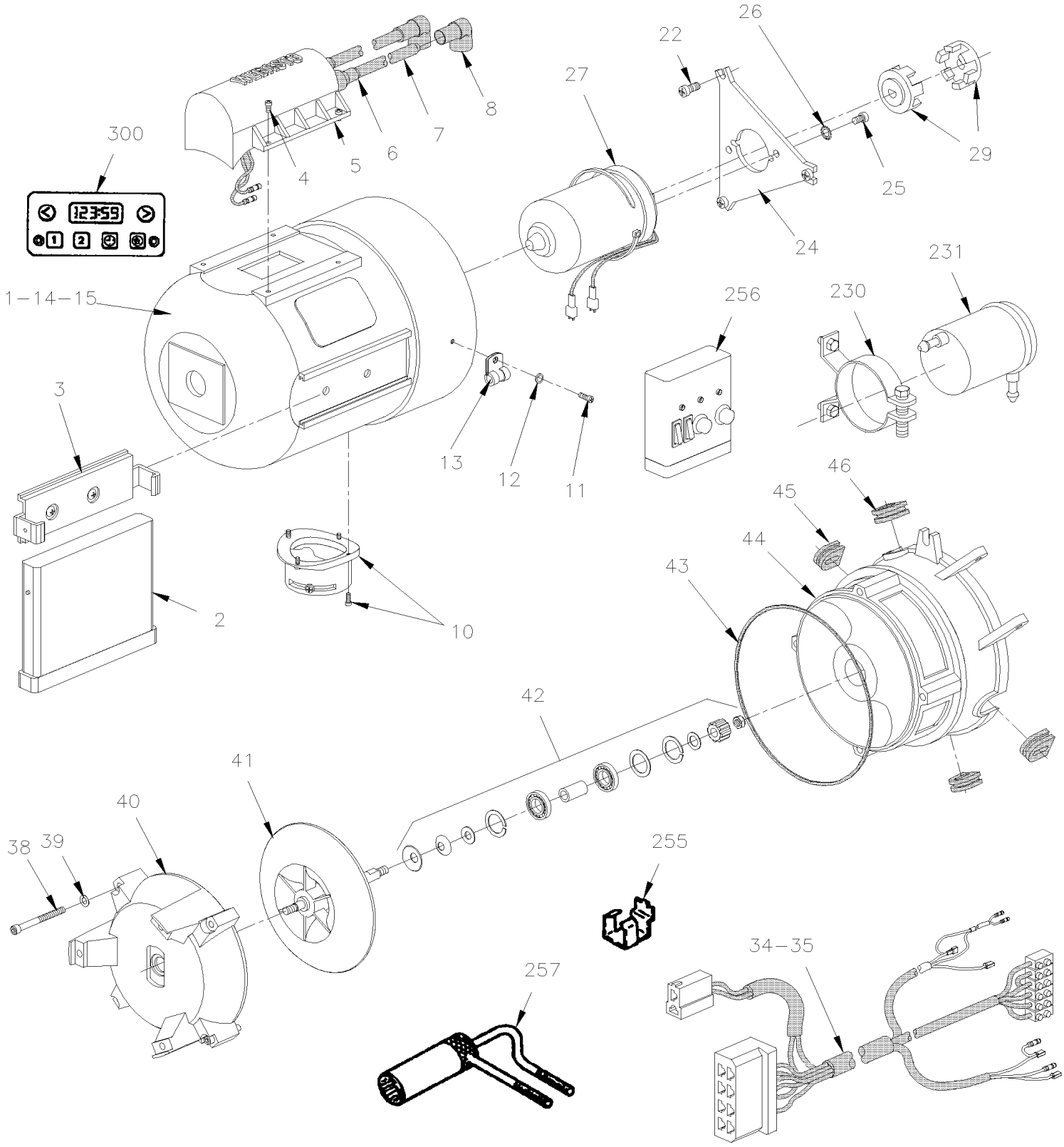

From Y-7046 To 2-7764		Date:07/2024	PAGE:871085

WATER HEATER - "WEBASTO" 45,000 B.T.U.

Item#	Part	Description	XLII 45	XLII MTH40	XLII MTH45	XLII MTH45E	NOTES
		WATER HEATER - "WEBASTO" 45,000 B.T.U.	1	1	1	1	
1	871376	. BURNER HEAD ASSY / 24V / DBW 2010	1	1	1	1	
2	870909	. CONTROL UNIT 24V	1	1	1	1	A
. NS	561186	. . CONNECTOR / FASTIN-FASTON (.250) / RH 6C / AMP 925276-0	1	1	1	1	A
. NS	561597	. . CONNECTOR / 56 SERIES / TAB RH 2C / BROWN / PED 2965981	1	1	1	1	A
. NS	562363	. . CONNECTOR / FASTIN-FASTON (.250) / RH 8C / AMP 163007	1	1	1	1	A
3	N8883051	. CLIP CONTROL UNIT	1	1	1	1	
4	G1017468	. SCREW M3.5x14	4	4	4	4	
5	871119	. COIL, WATER HEATER IGNITER 24V	1	1	1	1	
5	191768	. COIL, WATER HEATER IGNITER 12V	1	1	1	1	
6	870911	. SOCKET	2	2	2	2	
7	870912	. CABLE, HIGH TENSION / S.L.	AR	AR	AR	AR	
8	G1017515	. BOOT PLUG	2	2	2	2	
10	G1017415	. INTAKE SOCKET	1	1	1	1	
11	G1093260	. SCREW M4x12	4	4	4	4	
12	G1017467	. WASHER SERRATED A4.3	4	4	4	4	
13	G1093261	. CLAMP	1	1	1	1	
14	G1017517	. PROTECTOR CAP W/LABEL	1	1	1	1	
15	G1017565	. . DECAL "DANGER"	2	2	2	2	
22	502529	. SCREW MA BDG PH M5-0.8x12 BZC	3	3	3	3	
22	G1017423	. SCREW W/WASHER AM5x12	3	3	3	3	
24	G1093262	. FLANGE	1	1	1	1	
25	500344	. SCREW MA RND PH M4-0.7x12 Z050	2	2	2	2	
25	G1093260	. SCREW M4x12	2	2	2	2	
26	G1017467	. WASHER SERRATED A4.3	2	2	2	2	
27	871120	. MOTOR ASSY / 24V	1	1	1	1	
27	191771	. MOTOR ASSY / 12V	1	1	1	1	
27	G1017520	. MOTOR ASSY / 24V	1	1	1	1	
29	871121	. CLUTCH HALF	2	2	2	2	
29	G1017518	. CLUTCH HALF	2	2	2	2	
34	871122	. HARNESS, CABLE 4 WAYS	1	1	1	1	
35	871123	. HARNESS, CABLE 6 WAYS	1	1	1	1	
35	G1017522	. CABLE HARNESS 6W	1	1	1	1	
36	G1017427	. TERMINAL BLOCK 6W	1	1	1	1	
36	G101742	. TERMINAL BLOCK 4W	1	1	1	1	
38	G1017546	. SCREW CAP HEXS M5x35	4	4	4	4	
39	G1017547	. SPRING WASHER	4	4	4	4	
40	G1017523	. MOTOR SUPPORT	1	1	1	1	
41	871124	. IMPELLER WITH SHAFT	1	1	1	1	
41	G1017524	. IMPELLER WITH SHAFT	1	1	1	1	
42	871125	. PARTS FOR SHAFT MOUNTING	1	1	1	1	
42	G1017525	. PARTS FOR SHAFT MOUNTING	1	1	1	1	

From Y-7046 To 2-7764		Date:07/2024	PAGE:871085

WATER HEATER - "WEBASTO" 45,000 B.T.U.

Item#	Part	Description	XLII 45	XLII MTH40	XLII MTH45	XLII MTH45E	NOTES
43	871392	. SEALING RING	1	1	1	1	
43	G1093264	. SEALING RING	1	1	1	1	
44	871393	. BLOWER HOUSING	1	1	1	1	
44	G1093265	. BLOWER HOUSING	1	1	1	1	
45	871394	. GROMMET L.H. SIDE	2	2	2	2	
45	G1017527	. GROMMET L.H. SIDE	2	2	2	2	
46	871395	. GROMMET R.H. SIDE	2	2	2	2	
46	G1017528	. GROMMET R.H. SIDE	2	2	2	2	
50	870917	. SOLONOID VALVE / 24V	1	1	1	1	
50	G1017456	. SOLONOID VALVE / 24V	1	1	1	1	
50	192305	. SOLONOID VALVE / 12V	1	1	1	1	
50	G1093266	. SOLONOID VALVE / 12V	1	1	1	1	
51	870919	. UNLOADER POWER ASSY	1	1	1	1	
52	871297	. . GASKET	1	1	1	1	
53	502531	. SCREW CAP HEX M6-1.0x16 G8.8 Z050	1	1	1	1	
53	G1017437	. SCREW CAP HEX	1	1	1	1	
54	G1017470	. SPRING WASHER	1	1	1	1	
55	G1017461	. CLAMP	1	1	1	1	
56	870920	. ELECTRODE, IGNITION	2	2	2	2	
58	500560	. SCREW MA PAN PH M4-0.7x6 Z050	1	1	1	1	
58	G1017474	. SCREW MA PAN PH M4x6	1	1	1	1	
59	870922	. CELL, PHOTOELECTRIC	1	1	1	1	
60	G1017475	. RETAINING RING	1	1	1	1	
60	G1017475	. RETAINING RING	1	1	1	1	
61	191679	. DISC	1	1	1	1	
62	871316	. NOZZLE 0.35GPH	1	1	1	1	
62	871126	. NOZZLE 0.40GPH	1	1	1	1	
62	G1017532	. NOZZLE 0.40GPH	1	1	1	1	
62	192271	. NOZZLE 0.65GPH / PACK OF 12	AR	AR	AR	AR	
62	G5007384	. NOZZLE 0.65GPH	AR	AR	AR	AR	
62	G1017473	. NOZZLE 0.65GPH	AR	AR	AR	AR	
62	871291	. NOZZLE 0.85GPH	AR	AR	AR	AR	
65	870928	. PIPE, HIGH PRESSURE	1	1	1	1	
66	870929	. BANJO BOLT / M10-1.0	1	1	1	1	
67	870923	. BANJO WASHER / M10	4	4	4	4	
68	G1017533	. FUEL LINE / (FEED LINE PRESSURE)	1	1	1	1	
69	G1017534	. FUEL LINE / (RETURN)	1	1	1	1	
70	G1017441	. SCREW CAP HEXS M4x30	2	2	2	2	
71	G1017442	. SPRING WASHER	2	2	2	2	
72	871127	. FUEL PUMP	1	1	1	1	
72	G1093267	. FUEL PUMP	1	1	1	1	
74	870925	. . VALVE, PRESSURE CONTROL	1	1	1	1	

From Y-7046 To 2-7764		Date:07/2024	PAGE:871085

WATER HEATER - "WEBASTO" 45,000 B.T.U.

Item#	Part	Description	XLII 45	XLII MTH40	XLII MTH45	XLII MTH45E	NOTES
75	870924	. . FILTER	1	1	1	1	
77	870926	. . GASKET	1	1	1	1	
80	G1017424	. SCREW W/WASHER AM5x12	2	2	2	2	
82	G5007387	. NOZZLE HOLDER	1	1	1	1	
82	N8883089	. NOZZLE HOLDER	1	1	1	1	
83	G1017530	. HEATING ELEMENT	1	1	1	1	
84	N8883147	. HOLDING STRAP	1	1	1	1	
85	G1017417	. BRACKET	1	1	1	1	
86	G1093269	. NOZZLE PRE-HEAT THERMOSTAT	1	1	1	1	
87	G1017423	. SCREW W/WASHER AM5x12	4	4	4	4	
88	G1017536	. NOZZLE HOLDER PLATE	1	1	1	1	
89	870931	. SPUR GEAR	1	1	1	1	
90	G1017439	. RETAINING RING	1	1	1	1	
NS	G1017537	. GREASE ISOFLEX LDS 18	1	1	1	1	
100	N8883102	. CAP	1	1	1	1	
104	G1017549	. SCREW M4x8	1	1	1	1	
105	G1017538	. CLAMP	1	1	1	1	
107	G1017487	. SCREW	1	1	1	1	
108	G1017488	. BRACKET	1	1	1	1	
109	G1017489	. JOINT	1	1	1	1	
121	870932	. FUSE THERMO 138°C (YELLOW)	1	1	1	1	
127	870934	. CONTROL THERMOSTAT 75°C GREEN & RED	1	1	1	1	
128	G1093271	. CONTROL THERMOSTAT 70°C WHITE & ORANGE	1	1	1	1	
130	870933	. RELEASE, THERMO 117°C (GREEN)	1	1	1	1	
139	G1093273	. BLEEDING VALVE	1	1	1	1	
140	G1017550	. SECURRING CUTTER PIN	1	1	1	1	
141	G1017541	. CABLE CLAMP	1	1	1	1	
142	871128	. CHAMBER, COMBUSTION	1	1	1	1	
142	G1017540	. CHAMBER, COMBUSTION	1	1	1	1	
143	G1017542	. HEAT EXCHANGER ASSY	1	1	1	1	
149	5001110	. NUT HEXF M6-1.0 Z050	2	2	2	2	
149	G1017551	. NUT W/WASHER	2	2	2	2	
150	G1093275	. EYE BOLT AM6x45	2	2	2	2	
151	G1017553	. SLOTTED PIN	2	2	2	2	
152	G1017428	. PLUG	2	2	2	2	
153	870935	. ANGLE BRACKET	1	1	1	1	
153	G1017479	. ANGLE BRACKET	1	1	1	1	
230	871038	SUPPORT, FILTER FUEL	1	1	1	1	
231	871037	FILTER, FUEL	1	1	1	1	
251	871096	EXHAUST PIPE FLEXIBLE 38MM O.D. X 1000MM	1	1	1	1	
255	870937	GAUGE / IGNITION ELECTRODE	1	1	1	1	
256	871319	TESTING GEAR TOOL	AR	AR	AR	AR	

From Y-7046 To 2-7764		Date:07/2024	PAGE:871085

WATER HEATER - "WEBASTO" 45,000 B.T.U.

Item#	Part	Description	XLII 45	XLII MTH40	XLII MTH45	XLII MTH45E	NOTES
256	N8887040	TESTING GEAR TOOL	1	1	1	1	
257	870938	BOX WRENCH / HIGH PRESSURE NOZZLE	1	1	1	1	
257	N8887748	BOX WRENCH / HIGH PRESSURE NOZZLE	1	1	1	1	
258	N8887750	FUEL PRESSURE GAUGE	1	1	1	1	
259	G1093411	MAINTENANCE MANUAL PAPER	1	1	1	1	
300		SEE LATERAL CONSOL	1	1	1	1	
NS	871246	KIT, RETROFIT W/HEATER CONTROL BOX WATERTIGHT	AR	AR	AR	AR	
NS	065744	KIT, RETROFIT BOX W/ENTENSION CABLE AND SUPP.	AR	AR	AR	AR	
		A) FOR PRODUCT IMPROVMENT USE KIT #871246 FOTR EXTEND WIRE CABLE BETWEEN CONTROL BOX AND WATER HEATER OR USE KIT #065744 FOR FIXED UNIT CONTROL BOX IN WATERPROOF BOX					

From Y-7046 To 2-7764		Date:07/2024	PAGE:871097
WATER HEATER - "ESPAR" 41,000 B.T.U.			

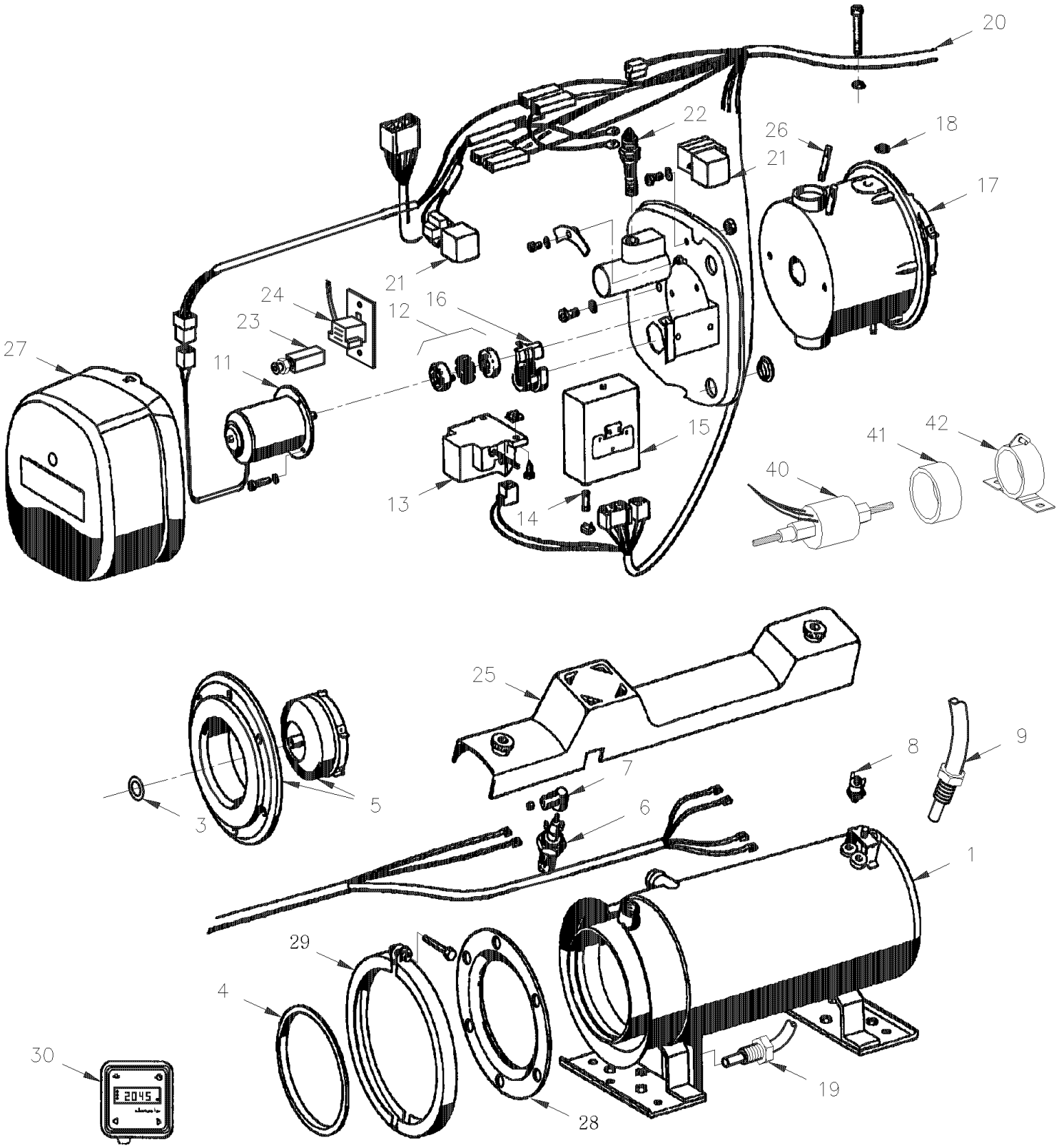

From Y-7046 To 2-7764		Date:07/2024	PAGE:871097

WATER HEATER - "ESPAR" 41,000 B.T.U.

Item#	Part	Description	XLII 45	XLII MTH40	XLII MTH45	XLII MTH45E	NOTES
		WATER HEATER ASSY / MODEL D-12W / 25 1860 25 - "ESPAR" 41,000 B.T.U. From V-1922	1	1	1	1	
1	870983	. EXCHANGER HEAT To V-1921	1	1	1	1	
1	871111	. EXCHANGER HEAT From V-1922	1	1	1	1	
3	871115	. WASHER	1	1	1	1	
4	870997	. RING SEALING	1	1	1	1	
5	871114	. ATOMIZER	1	1	1	1	A
NS	870984	. KIT ATOMIZER	1	1	1	1	A
6	870994	. PLUG GLOW	1	1	1	1	
7	870993	. CONNECTOR PLUG	1	1	1	1	
8	870996	. SWITCH SAFETY CUTOUT	1	1	1	1	
9	871035	. SWITCH REGULATING / (CUT OUT 194°F / CUT IN 178°F) To V-1921	1	1	1	1	
9	871116	. SWITCH REGULATING / (CUT OUT 194°F / CUT IN 178°F) From V-1922	1	1	1	1	
11	870989	. MOTOR ASSY / 24V	1	1	1	1	
12	871005	. COUPLING	1	1	1	1	
13	870988	. IGNITION SPARK GENERATOR	1	1	1	1	
14	871003	. FUSE 4 AMPS	1	1	1	1	
15	871088	. UNIT CENTRAL	1	1	1	1	
16	870991	. GROMMET	1	1	1	1	
17	870990	. BURNER To V-1921	1	1	1	1	
17	871113	. BURNER From V-1922	1	1	1	1	
18	870998	. O-RING	1	1	1	1	
19	871118	. SENSOR FLAME	1	1	1	1	
20	870999	. HARNESS ASSY To V-1921	1	1	1	1	
20	871112	. HARNESS ASSY From V-1922	1	1	1	1	
21	561707	. RELAY 24V S.P.D.T. W/RESISTOR /	2	2	2	2	
22	870987	. RESISTOR	1	1	1	1	
23	871117	. LED, INDICATOR	1	1	1	1	
24	871095	. CIRCUIT BOARD	1	1	1	1	
25	871072	. COVER / GLOW PLUG	1	1	1	1	
26	871081	. STUD / TO FIX COVER / M5X40MM	2	2	2	2	
27	871083	. COVER	1	1	1	1	
28	871367	. FLANGE	1	1	1	1	
29	871349	. CLAMP RETAINER	1	1	1	1	
30	562025	TIMER ASSY / W/"ESPAR" PREHEATER To V-1921	1	1	1	1	
30	562680	TIMER ASSY / W/"ESPAR" PREHEATER / 7 DAYS From V-1922	1	1	1	1	
NS	871102	. BULB / 1.4WATT-24 VOLTS	1	1	1	1	
40	870973	PUMP FUEL	1	1	1	1	
41	870972	RING, RUBBER	1	1	1	1	
42	870971	SUPPORT, PUMP	1	1	1	1	

From Y-7046 To 2-7764		Date:07/2024	PAGE:871097

WATER HEATER - "ESPAR" 41,000 B.T.U.

Item#	Part	Description	XLII 45	XLII MTH40	XLII MTH45	XLII MTH45E	NOTES
		A) WHEN IT`S THE FIRST ATOMIZER REPLACED, USE CONVERSION KIT #870984					

From Y-7257 To 4-8464		Date:07/2024	PAGE:871100
WATER HEATER - "PROHEAT" 80,000 B.T.U.			

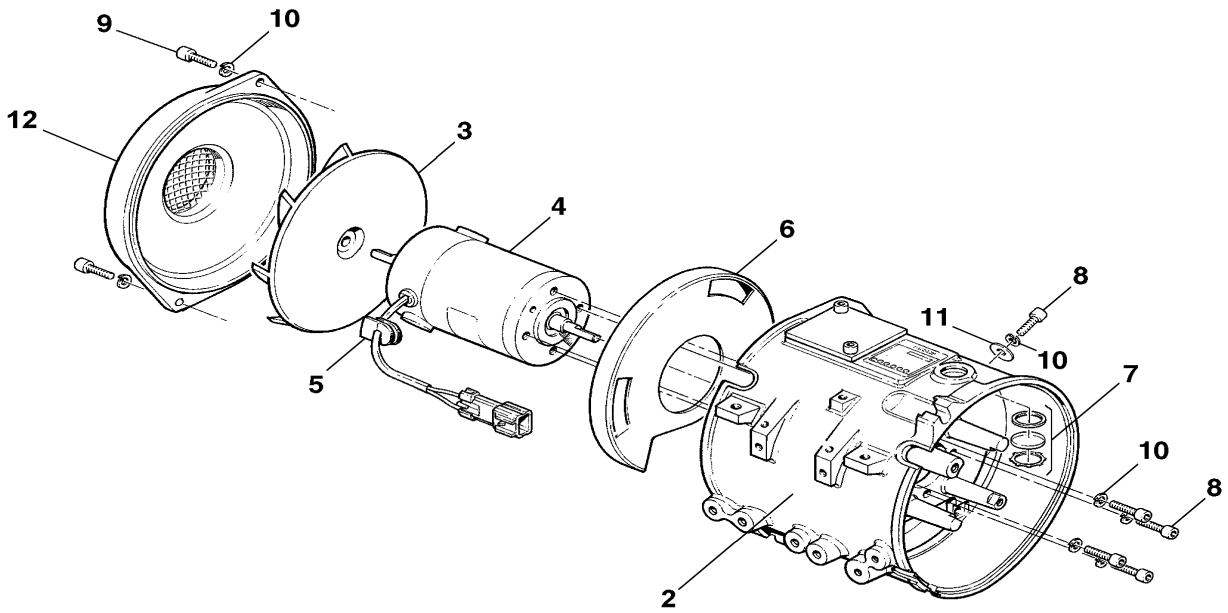

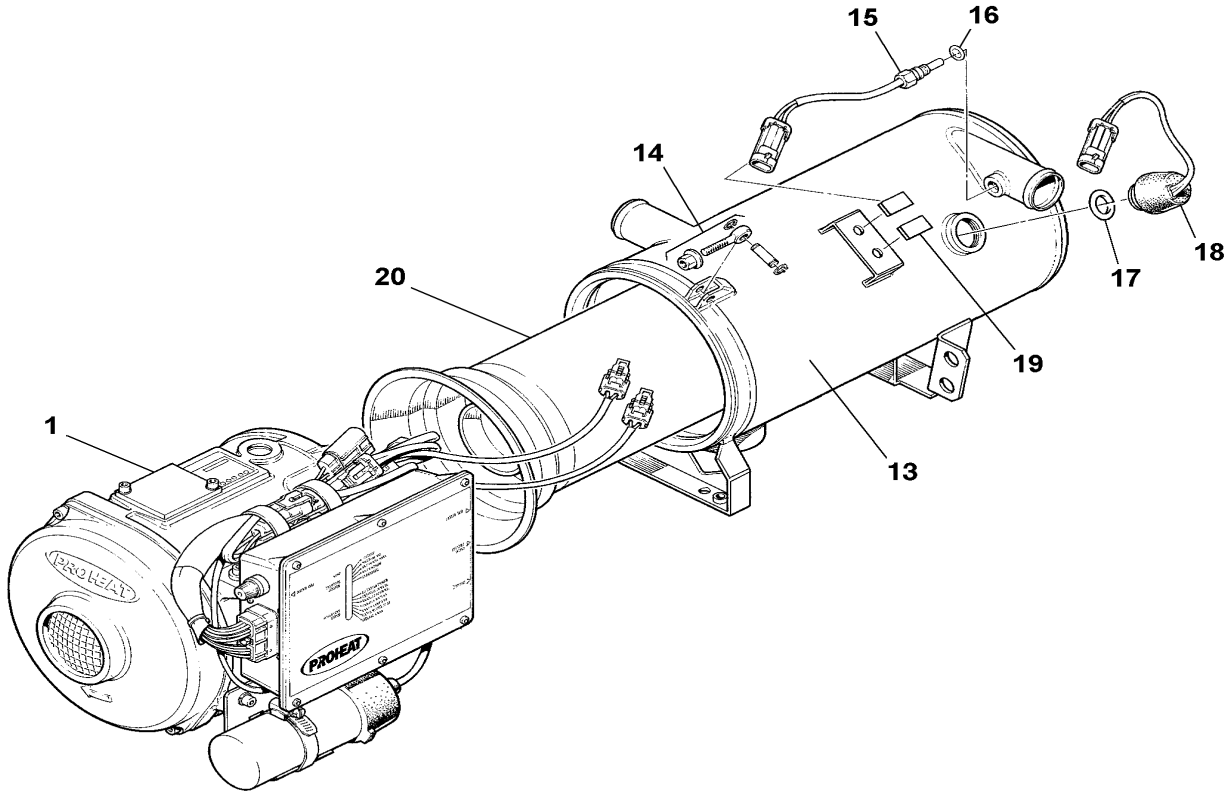

From Y-7257 To 4-8464		Date:07/2024	PAGE:871100
WATER HEATER - "PROHEAT" 80,000 B.T.U.			

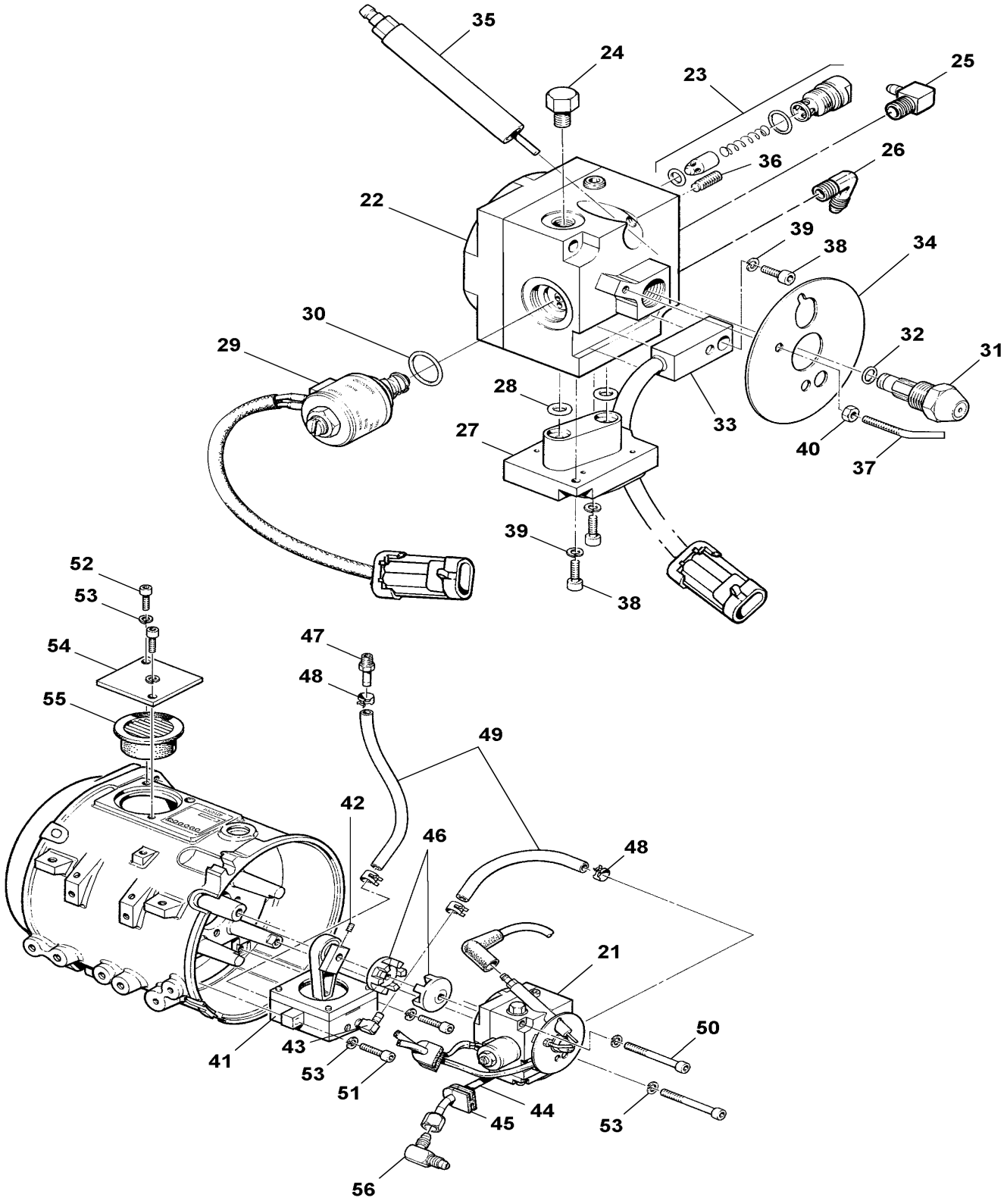

From Y-7257 To 4-8464		Date:07/2024	PAGE:871100
WATER HEATER - "PROHEAT" 80,000 B.T.U.			

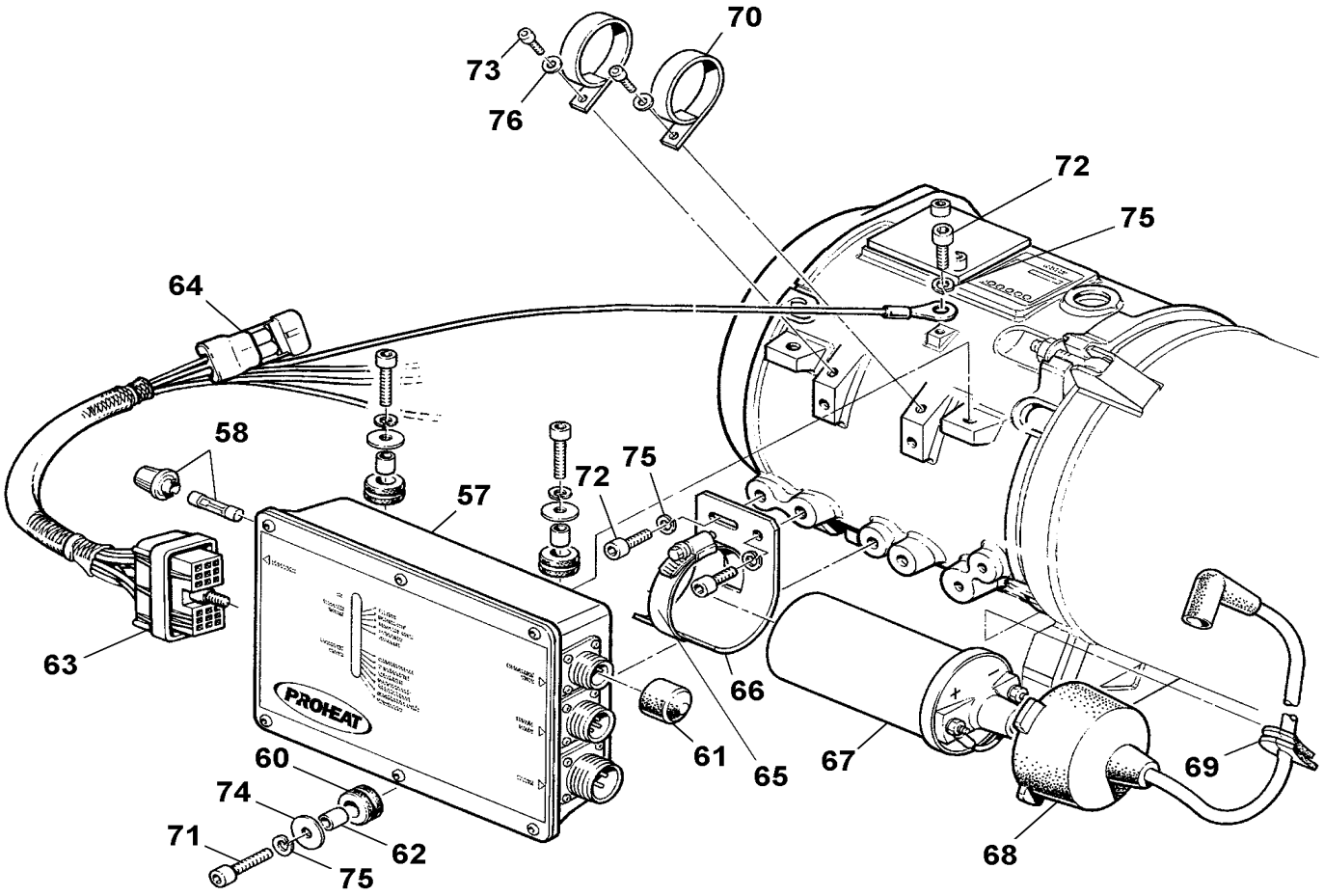

From Y-7257 To 4-8464		Date:07/2024	PAGE:871100

WATER HEATER - "PROHEAT" 80,000 B.T.U.

Item#	Part	Description	XLII 45	XLII MTH40	XLII MTH45	XLII MTH45E	NOTES
		WATER HEATER - "PROHEAT" 80,000 B.T.U.	1	1	1	1	
1	N8890283	. BURNER HEAD ASM	1	1	1	1	
2	N8890292	. . CASTING BURNER HEAD	1	1	1	1	
3	N8890294	. . FAN BLADE	1	1	1	1	
NS	N8890347	. . . RETAINING RING	1	1	1	1	
4	N8890295	. . MOTOR 24V	1	1	1	1	
5	N8890296	. . GROMMET STYLE " D "	1	1	1	1	
6	N8890297	. . BAFFLE AIR ADJUST	1	1	1	1	
7	N8890298	. . SIGHT GLASS KIT	1	1	1	1	
8	N8890299	. . SCREW CAP HEXS M6-1.0x20 ZP	5	5	5	5	
9	N8890300	. . SCREW CAP HEXS M6-1.0x16 ZP	2	2	2	2	
10	N8890301	. . WASHER LO SPT M6 ZP	7	7	7	7	
11	N8890302	. . WASHER FL 1/4 ZP	1	1	1	1	
12	N8890293	. . COVER	1	1	1	1	
13	N8890285	. HEAT EXCHANGER	1	1	1	1	
14	N8890286	. . EYE BOLT KIT	2	2	2	2	
15	N8890287	. TEMPERATURE SENSOR	1	1	1	1	
16	N8890288	. . O-RING	1	1	1	1	
17	N8890289	. OVERHEAT BREAKER SENSOR	1	1	1	1	
18	N8890290	. . O-RING	1	1	1	1	
19	N8890291	. CLIP	2	2	2	2	
20	N8890284	. COMBUSTION TUBE	1	1	1	1	
21	N8890306	. FUEL DELIVERY UNIT	1	1	1	1	
22	N8890331	. . FUEL PUMP	1	1	1	1	
23	N8890334	. . . RELIEF VALVE KIT	1	1	1	1	
24	N8890341	. . . PLUG HEX-HEAD / ORB FITTING / #2ORB-M BR	1	1	1	1	
25	N8890305	. . . ELBOW 1/4 ID HOSE x 1/8 NPT MALE	1	1	1	1	
26	N8890346	. . . ELBOW 1/4 JIC MALE x 1/8 NTP MALE	1	1	1	1	
27	N8890332	. . FUEL REGULATOR	1	1	1	1	
28	N8890333	. . . O-RING	2	2	2	2	
29	N8890335	. . SELENOID VALVE 24V	1	1	1	1	
30	N8890336	. . . O-RING	1	1	1	1	
31	N8890337	. . NOZZLE	1	1	1	1	
32	N8890338	. . . O-RING	1	1	1	1	
33	N8890339	. . FLAME SENSOR	1	1	1	1	
34	N8890340	. . FLAME SHIELD	1	1	1	1	
35	N8890342	. . ELECTRODE SPARK	1	1	1	1	
36	N8890348	. . . SET SCREW	1	1	1	1	
37	N8890343	. . ELECTRODE GROUND	1	1	1	1	
38	N8890329	. . SCREW CAP HEXS M4-0.7x10 ZP	3	3	3	3	
39	N8890344	. . WASHER LO SPT ZP M4	3	3	3	3	
40	N8890345	. . NUT HEX ZP M4x.7x10MM	1	1	1	1	

From Y-7257 To 4-8464		Date:07/2024	PAGE:871100

WATER HEATER - "PROHEAT" 80,000 B.T.U.

Item#	Part	Description	XLII 45	XLII MTH40	XLII MTH45	XLII MTH45E	NOTES
41	N8890303	. COMPRESSOR	1	1	1	1	
42	N8890304	. . SCREW SET #10-32x3/8	1	1	1	1	
43	N8890305	. . ELBOW 1/4 ID HOSE x 1/8 NPT MALE	2	2	2	2	
44	N8890307	. FUEL TUBE	1	1	1	1	
45	N8890296	. GROMMET STYLE " D "	2	2	2	2	
46	N8890308	. COUPLING 8MM	1	1	1	1	
47	N8890309	. FITTING 1/4 ID X 1/8 NPT MALE	1	1	1	1	
48	N8890310	. SPRING CLAMP	1	1	1	1	
49	N8890311	. HOSE 3/16 ID	AR	AR	AR	AR	
50	N8890312	. SCREW CAP HEXS M6-1.0x60 ZP	2	2	2	2	
51	N8890299	. SCREW CAP HEXS M6-1.0x20 ZP	2	2	2	2	
52	N8890300	. SCREW CAP HEXS M6-1.0x16 ZP	2	2	2	2	
53	N8890301	. WASHER LO SPT M6 ZP	6	6	6	6	
54	N8890313	. COVER	1	1	1	1	
55	N8890314	. AIR FILTER	1	1	1	1	
56	N8890315	. ELBOW 1/4 JIC MALE	1	1	1	1	
57	N8890316	. CONTROL MODULE 24V	1	1	1	1	
58	N8890317	. . FUSE HOLDER	1	1	1	1	
NS	560062	. . . FUSE / 15 AMPS / AGC-15	1	1	1	1	
60	N8890320	. . GROMMET	3	3	3	3	
61	N8890323	. . VINYL CAP	1	1	1	1	
62	N8890319	. SPACER	3	3	3	3	
63	N8890321	. MAIN HARNESS	1	1	1	1	
64	N8890322	. SUSTITUTION PLUG	1	1	1	1	
65	N8890324	. CLAMP SS #32	1	1	1	1	
66	N8890325	. BRACKET "J"	1	1	1	1	
67	N8890326	. IGNITION COIL	1	1	1	1	
68	N8890327	. IGNITION LEAD & BOOT	1	1	1	1	
69	N8890296	. GROMMET STYLE " D "	1	1	1	1	
70	N8890328	. WIRE CLIP	2	2	2	2	
71	N8890299	. SCREW CAP HEXS M6-1.0x20 ZP	2	2	2	2	
72	N8890300	. SCREW CAP HEXS M6-1.0x16 ZP	2	2	2	2	
73	N8890329	. SCREW CAP HEXS M4-0.7x10 ZP	1	1	1	1	
74	N8890302	. WASHER FL 1/4 ZP	3	3	3	3	
75	N8890301	. WASHER LO SPT M6 ZP	6	6	6	6	
76	N8890330	. WASHER FL ZP M4	2	2	2	2	
		FOLLOWING ITEMS ARE RELATED WITH					
		AUTOMATIC START					
		WITH WATER HEATER INSTALLATION					
		WITH BATTERIES CHARGER 110V					

From Y-7257 To 4-8464		Date:07/2024	PAGE:871100

WATER HEATER - "PROHEAT" 80,000 B.T.U.

Item#	Part	Description	XLII 45	XLII MTH40	XLII MTH45	XLII MTH45E	NOTES
111	066236	CABLE I/F BATTERIES CHARGER / W/RELAY BASE					A
111	068248	CABLE I/F BATTERIES CHARGER / W/RELAY BASE	1	1	1	1	A
112	066332	CABLE ASSY POWER / W/FUSE HOLDER & RECTIFIER					A
113	563332	RELAY 24V S.P.D.T. W/RESISTOR / "VOLVO" (20374662)					A
114	500946	SCREW TP BDG PH #8x1/2 N500					A
		A) LOCATED NEAR EVAPORATOR MOTOR RELAY					

From 2-7765 To 6-8906		Date:07/2024	PAGE:Y2-2350-11
WATER HEATER - INSTALLATION			

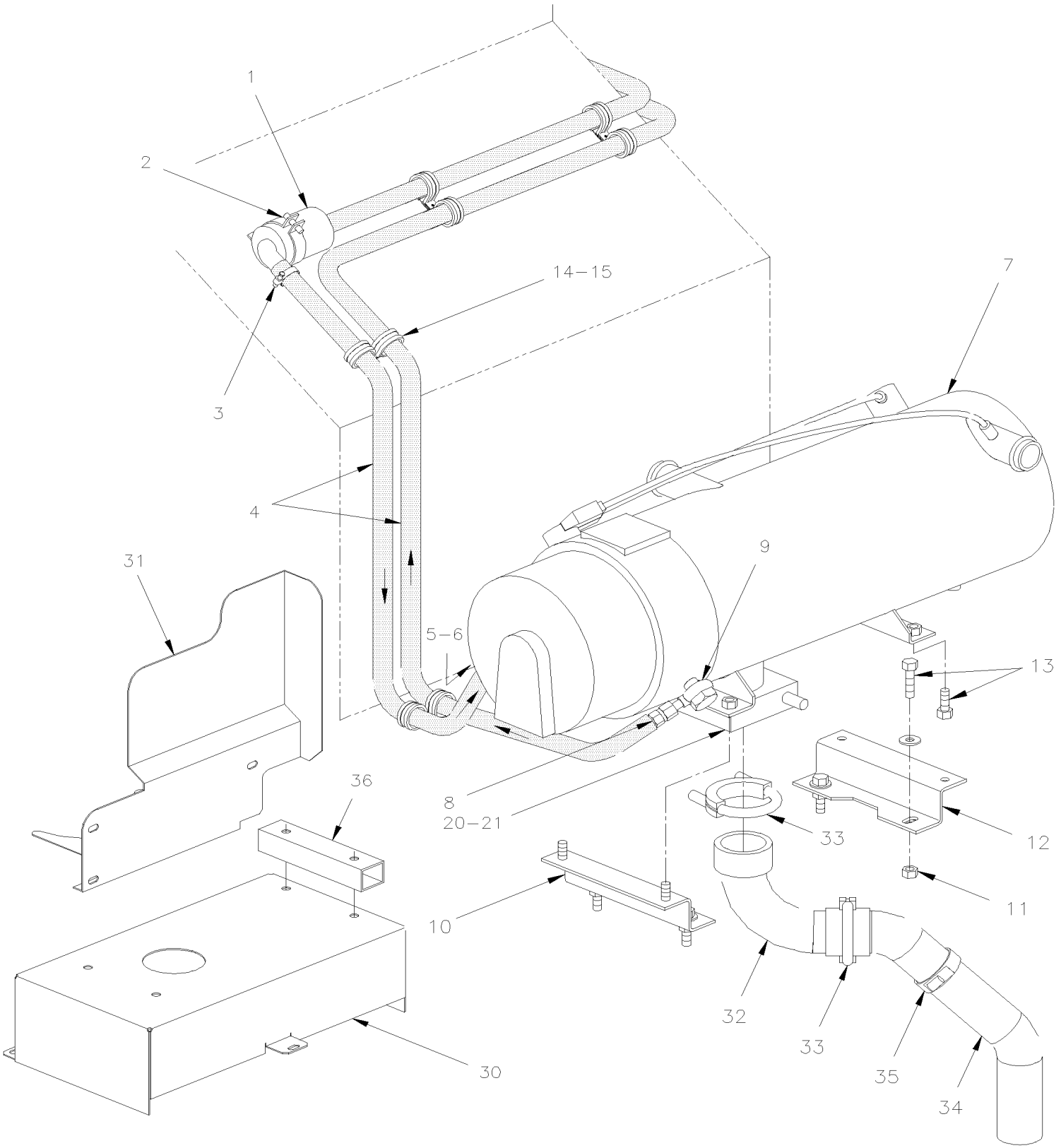

From 2-7765 To 6-8906		Date:07/2024	PAGE:Y2-2350-11

WATER HEATER - INSTALLATION

Item#	Part	Description	XLII 45	XLII MTH40	XLII MTH45	XLII MTH45E	NOTES
1	871038	SUPPORT, FILTER FUEL	1				
2	871037	FILTER, FUEL	1				
3	504230	HOSE CLAMP / 3/8"-7/8" SS / HS-6	2				
4	373382	HOSE / FUEL LINE / #4 7924MM	2				
5	501347	FEMALE CONNECTOR SWIVEL / PUSH-LOK FITTING #4JIC-Fx#4 BR	1				
6	5011237	BANJO UNION / 10MMx#4JIC-M	1				
7	**871202**	**WATER HEATER - "SPHEROS" 100,000 B.T.U. From 2-7765 To 6-8906**					
7	**871100**	**WATER HEATER - "PROHEAT" 80,000 B.T.U. From Y-7257 To 4-8164**					
7	**871329**	**WATER HEATER - "PROHEAT" 80,000 B.T.U. From 4-8165 To 6-8906**					
8	5011235	FEMALE CONNECTOR SWIVEL / PUSH-LOK FITTING #6JIC-Fx#4 BR	1				
9	5011238	BANJO UNION / 10MMx#6JIC-M	1				
10	373838	SUPPORT To 3-8164	2				
11	502543	NUT HEX M8-1.25 Z050	4				
12	5001003	WASHER LO SPT 8.1x12.7x2.0 Z050	8				
12	5001164	WASHER FL 8.4x25.0x2.0 Z050	8				
13	502790	SCREW CAP HEX M8-1.25x20 G8.8 Z050	8				
14	952627	CLAMP / 1/2" I.D.	AR				
15	500641	SCREW TP PAN PH #8x3/4 Z050	AR				
20	373839	EXHAUST PIPE SS 70MM O.D. X 80MM	1				
21	871203	U-CLAMP / 3" I.D.	1				
30	373777	BOX SUPPORT / W/80000 BTU "PROHEAT" To 4-8164	1				
30	373973	BOX SUPPORT / "WEBASTO" & "PROHEAT" From 4-8165	1				
30	374074	BOX SUPPORT / "PROHEAT" From 5-8453	1				A
31	373974	PROTECTOR & CLOSING PLATE From 4-8165	1				
32	871370	ELBOW 90° SHORT / EXHAUST "PROHEAT" From 5-8453	1				A
33	540061	U-CLAMP / 2 3/4" I.D. From 5-8453	1				A
34	871371	ELBOW 90° LONG / EXHAUST "PROHEAT" From 5-8453	1				
35	504024	HOSE CLAMP / 1"13/16"-2"3/4 SS / HS-36 From 5-8453	1				
36	374075	TUBE SPACER / 180MM From 5-8453	2				A
		A) WITH "PROHEAT" ONLY					

From 2-7765 To 6-8906		Date:07/2024	PAGE:871202
WATER HEATER - "SPHEROS" 100,000 B.T.U.			

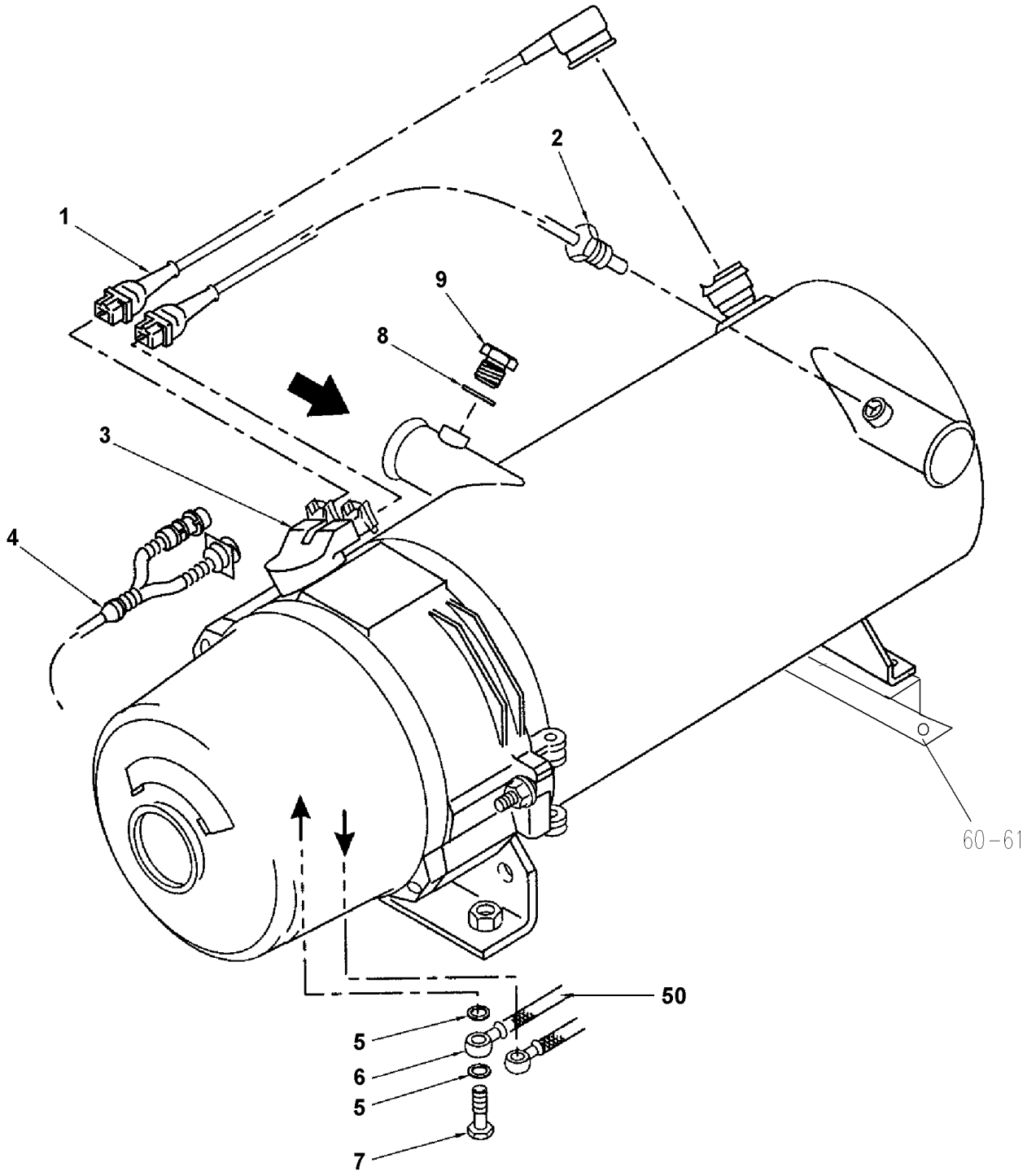

From 2-7765 To 6-8906		Date:07/2024	PAGE:871202
WATER HEATER - "SPHEROS" 100,000 B.T.U.			

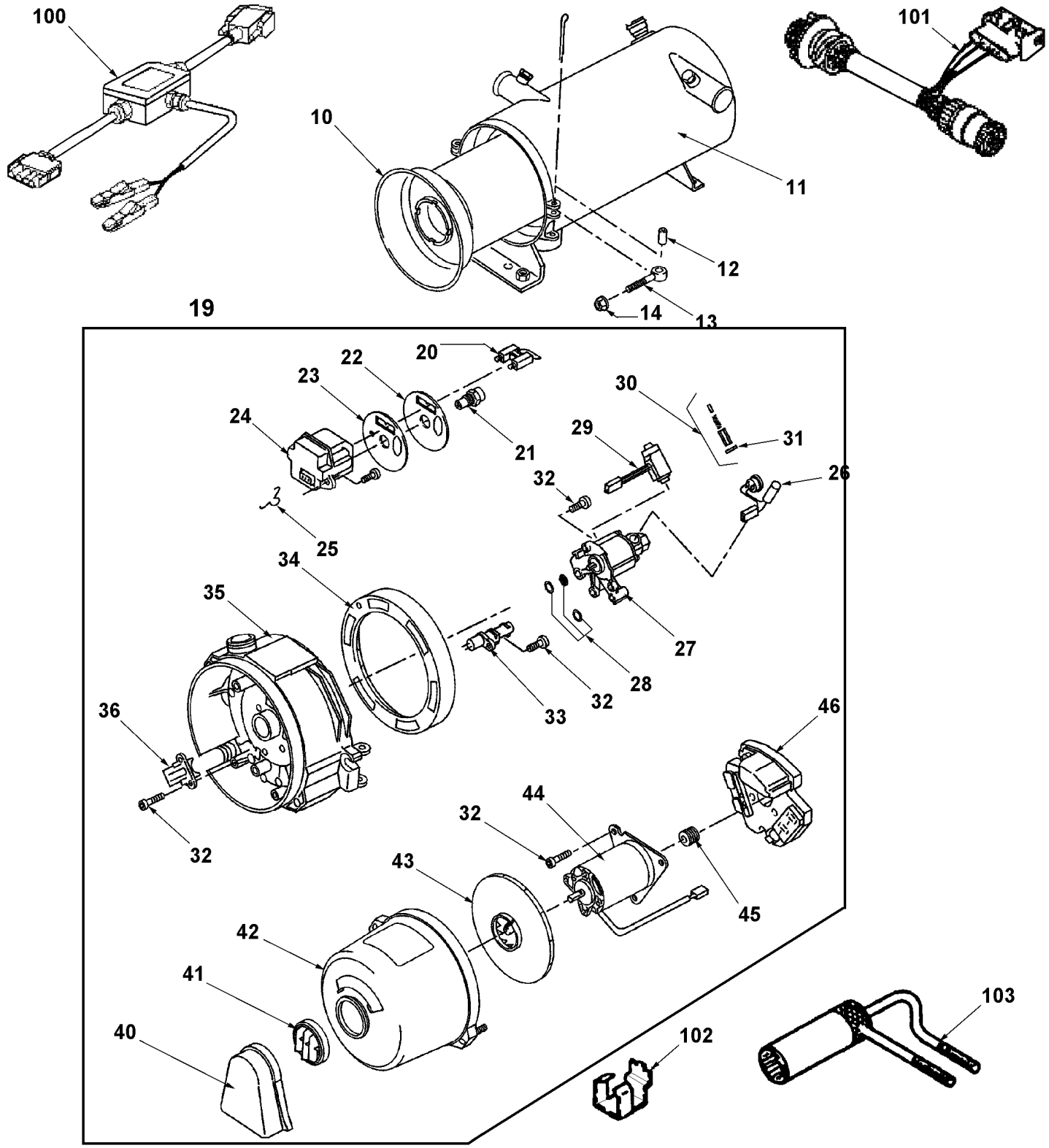

From 2-7765 To 6-8906		Date:07/2024	PAGE:871202

WATER HEATER - "SPHEROS" 100,000 B.T.U.

Item#	Part	Description	XLII 45	XLII MTH40	XLII MTH45	XLII MTH45E	NOTES
		WATER HEATER - "WEBASTO" 100,000 B.T.U.	1	1	1	1	
1	871284	. OVERHEAT PROTECTION	1	1	1	1	
2	871285	. TEMPERATURE SENSOR	1	1	1	1	
2	G1094742	. TEMPERATURE SENSOR	1	1	1	1	
3	194873	. CABLE ASSY / WITH RUBBER BOOT / CONTROL & HARNESS CABLE	1	1	1	1	
4	871286	. MASTER WIRING HARNESS	1	1	1	1	
5	870923	. BANJO WASHER / M10	1	1	1	1	
6	5011237	. BANJO UNION / 10MMx#4JIC-M	1	1	1	1	
6	5011238	. BANJO UNION / 10MMx#6JIC-M	1	1	1	1	
7	870929	. BANJO BOLT / M10-1.0	1	1	1	1	
8	N.S.P.	. GASKET / (151 173)	1	1	1	1	2
9	N.S.P.	. PLUG / (199 87A)	1	1	1	1	2
10	871288	. COMBUSTION CHAMBER	1	1	1	1	
11	871289	. HEAT EXCHANGER	1	1	1	1	
NS	871431	. . STICKER WEBASTO	1	1	1	1	
12	N8890598	. COLLAR	2	2	2	2	
13	N8890596	. EYE BOLT	2	2	2	2	
14	502692	. NUT HEXF STO M8-1.25 Z050	1	1	1	1	
19	N8894780	. BURNER HEAD ASSY / 24V - "WEBASTO" THERMO 300	1	1	1	1	
19	N8896417	. BURNER HEAD ASSY / 24V - "WEBASTO" THERMO 350	1	1	1	1	
20	871290	. . IGNATION ELECTRODE	1	1	1	1	
21	871291	. . NOZZLE 0.85GPH - "WEBASTO" THERMO 300	1	1	1	1	
21	870918	. . NOZZLE 0.80GPH	AR	AR	AR	AR	
22	871368	. . PHOTODISC	1	1	1	1	
23	871369	. . PHOTODISC	1	1	1	1	
24	871292	. . ELECTRONIC IGNITION UNIT	1	1	1	1	
25	N8883147	. . HOLDING STRAP	1	1	1	1	
26	871293	. . HEATING ELEMENT WITH THERMOSTAT	1	1	1	1	
27	871294	. . FUEL PUMP	1	1	1	1	
28	871295	. . . SMALLL PARTS FOR FUEL PUMP	1	1	1	1	
29	871296	. . . MAGNETIC COIL	1	1	1	1	
30	870919	. . . . UNLOADER POWER ASSY	1	1	1	1	
31	871297	. . . . GASKET	1	1	1	1	
32	502653	. . SCREW MA PAN PH M5-0.8x16 SS	AR	AR	AR	AR	
33	871298	. . FLAME DETECTOR	1	1	1	1	
34	194824	. . ADJUSTING RING	1	1	1	1	
35	N8890616	. . HOUSING	1	1	1	1	
35	G1094733	. . HOUSING	1	1	1	1	
36	N8890590	. . CORE GRIP	1	1	1	1	
36	G1094734	. . CORE GRIP	1	1	1	1	
40	871299	. . SPLASHGUARD	1	1	1	1	
41	871300	. . GRID	1	1	1	1	

From 2-7765 To 6-8906		Date:07/2024	PAGE:871202

WATER HEATER - "SPHEROS" 100,000 B.T.U.

Item#	Part	Description	XLII 45	XLII MTH40	XLII MTH45	XLII MTH45E	NOTES
42	871301	. . HOOD	1	1	1	1	
NS	G1017565	. . DECAL "DANGER"	1	1	1	1	
43	871302	. . FAN ROTOR	1	1	1	1	
44	871303	. . DRIVE ASSY	1	1	1	1	
45	871304	. . . CLUTCH	1	1	1	1	
46	871305	. . ELECTRONIC CONTROL	1	1	1	1	
		SEE WATER HEATER - INSTALLATION					
60	374322	SPACER ASSY 1" / "WATER HEATER & FENDER	2	2	2	2	
61	500069	SCREW CAP HEX M8-1.25x16 G10.9 DP	4	4	4	4	
NS	5001341	WASHER FL 8.4x17.0x1.6 SS	4	4	4	4	
NS	5001161	WASHER LO SPT 8.1x14.8x2.0 SS-304	4	4	4	4	
NS	5001188	NUT HEX M8-1.25 SS	4	4	4	4	
100	871320	DIAGNOSTIC KIT VERSION 2.2	AR	AR	AR	AR	
100	N8894700	DIAGNOSTIC KIT VERSION 2.?	AR	AR	AR	AR	
101	871321	ADAPTOR HARNESS / W/ROUND CONECTORS	AR	AR	AR	AR	
101	195314	ADAPTOR HARNESS / W/RECTANGULAR CONECTORS	1	1	1	1	
102	870937	GAUGE / IGNITION ELECTRODE	AR	AR	AR	AR	
103	870938	BOX WRENCH / HIGH PRESSURE NOZZLE	AR	AR	AR	AR	
		2) NOT SOLD BY PREVOST (SEE MANUFACTURING PART NUMBER AT END OF DESCRIPTION LINE)					

From Y-7257 To 4-8164		Date:07/2024	PAGE:871100
WATER HEATER - "PROHEAT" 80,000 B.T.U.			

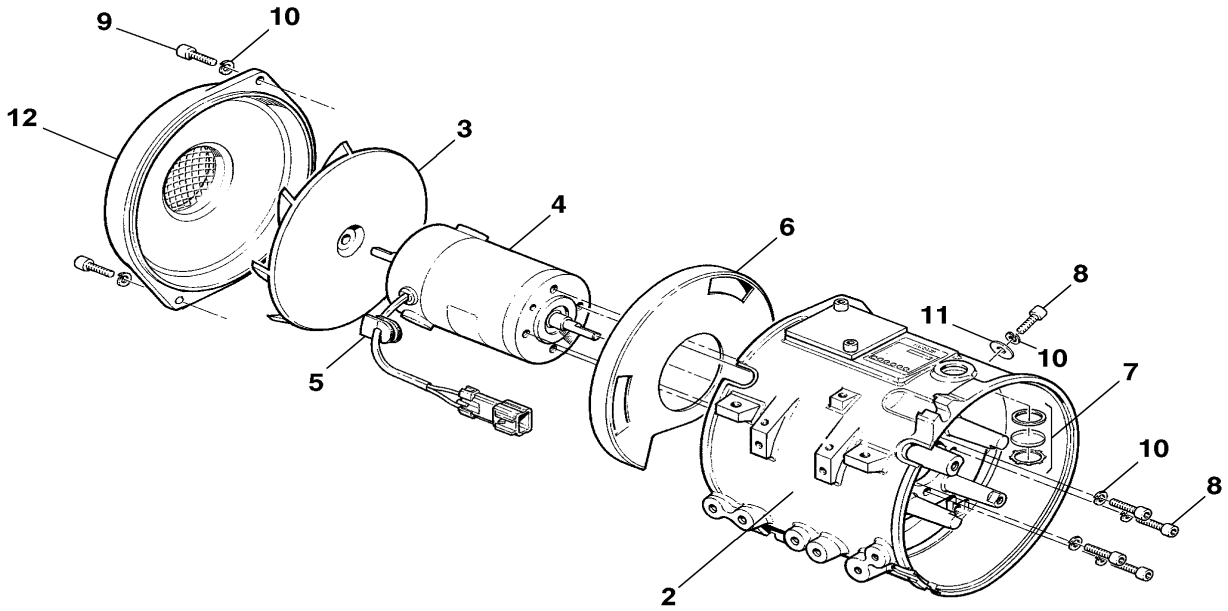

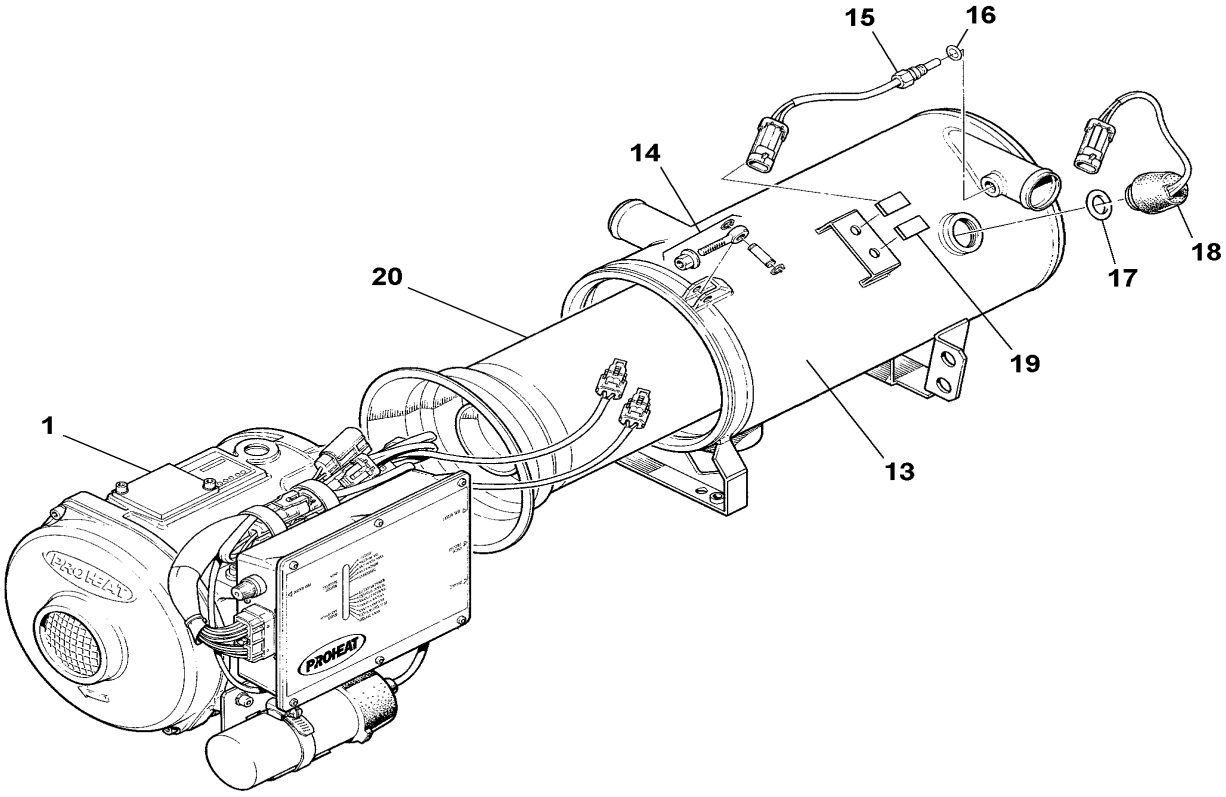

From Y-7257 To 4-8164		Date:07/2024	PAGE:871100
WATER HEATER - "PROHEAT" 80,000 B.T.U.			

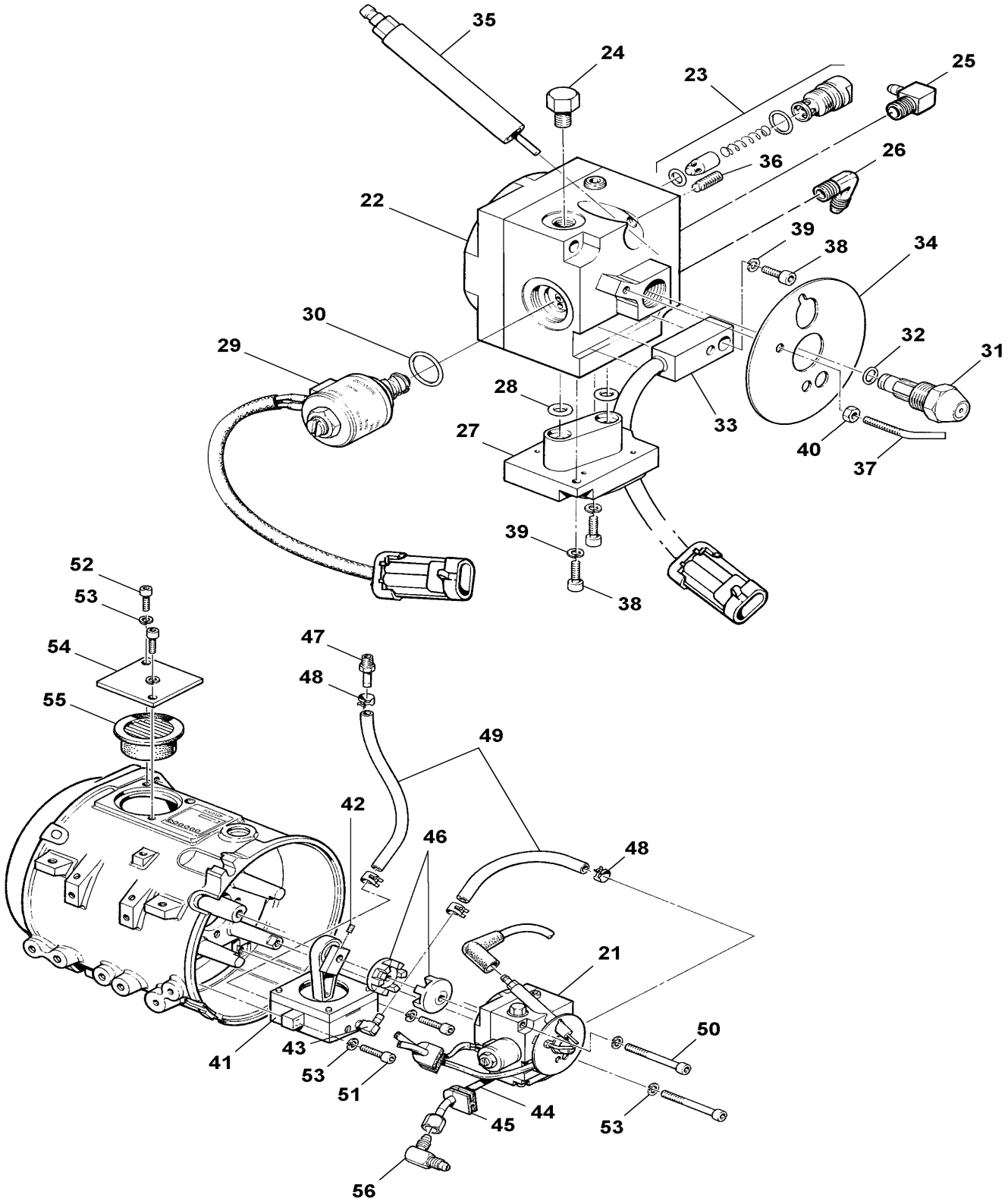

From Y-7257 To 4-8164		Date:07/2024	PAGE:871100
WATER HEATER - "PROHEAT" 80,000 B.T.U.			

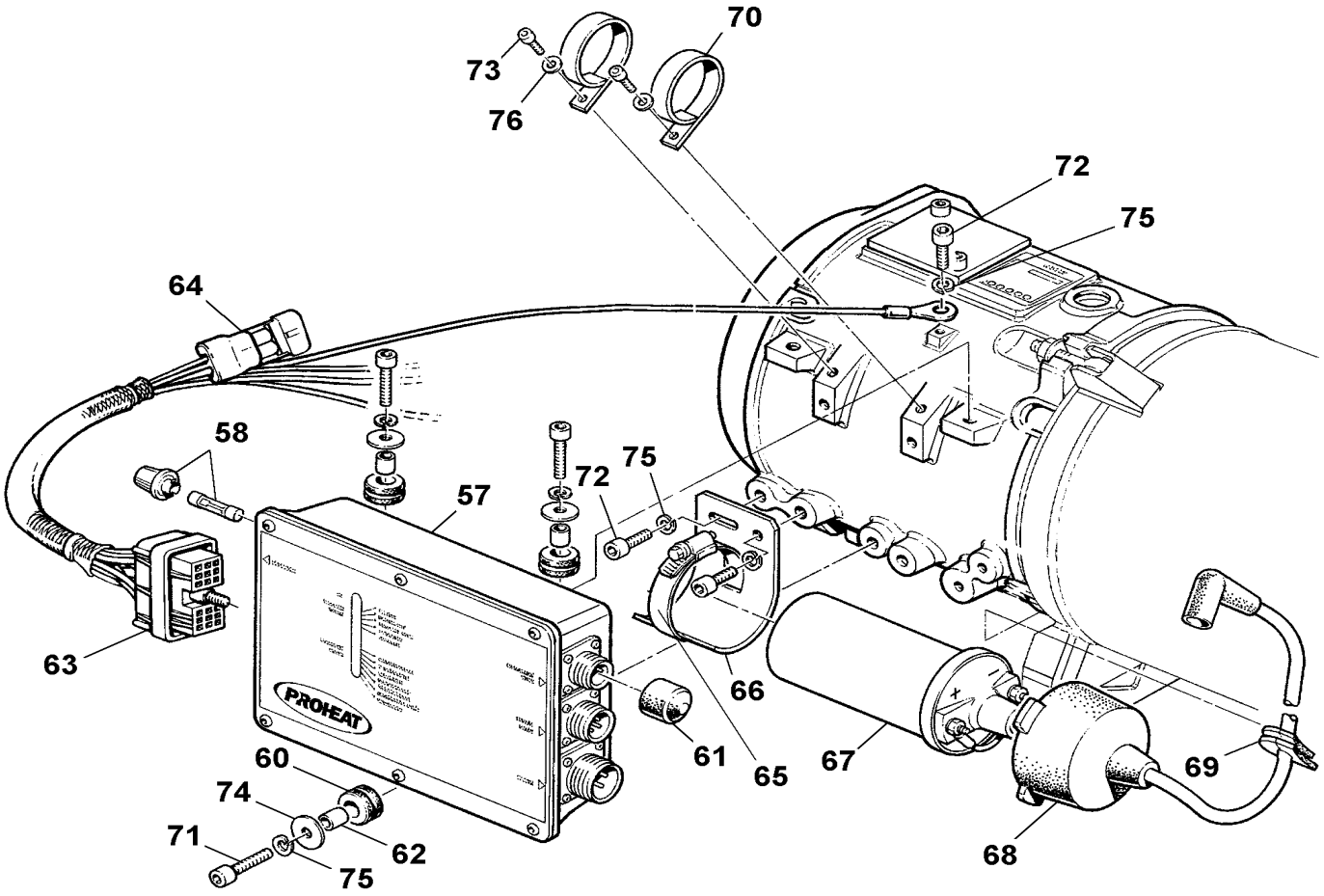

From Y-7257 To 4-8164		Date:07/2024	PAGE:871100

WATER HEATER - "PROHEAT" 80,000 B.T.U.

Item#	Part	Description	XLII 45	XLII MTH40	XLII MTH45	XLII MTH45E	NOTES
		WATER HEATER - "PROHEAT" 80,000 B.T.U.	1	1	1	1	
1	N8890283	. BURNER HEAD ASM	1	1	1	1	
2	N8890292	. . CASTING BURNER HEAD	1	1	1	1	
3	N8890294	. . FAN BLADE	1	1	1	1	
NS	N8890347	. . . RETAINING RING	1	1	1	1	
4	N8890295	. . MOTOR 24V	1	1	1	1	
5	N8890296	. . GROMMET STYLE " D "	1	1	1	1	
6	N8890297	. . BAFFLE AIR ADJUST	1	1	1	1	
7	N8890298	. . SIGHT GLASS KIT	1	1	1	1	
8	N8890299	. . SCREW CAP HEXS M6-1.0x20 ZP	5	5	5	5	
9	N8890300	. . SCREW CAP HEXS M6-1.0x16 ZP	2	2	2	2	
10	N8890301	. . WASHER LO SPT M6 ZP	7	7	7	7	
11	N8890302	. . WASHER FL 1/4 ZP	1	1	1	1	
12	N8890293	. . COVER	1	1	1	1	
13	N8890285	. HEAT EXCHANGER	1	1	1	1	
14	N8890286	. . EYE BOLT KIT	2	2	2	2	
15	N8890287	. TEMPERATURE SENSOR	1	1	1	1	
16	N8890288	. . O-RING	1	1	1	1	
17	N8890289	. OVERHEAT BREAKER SENSOR	1	1	1	1	
18	N8890290	. . O-RING	1	1	1	1	
19	N8890291	. CLIP	2	2	2	2	
20	N8890284	. COMBUSTION TUBE	1	1	1	1	
21	N8890306	. FUEL DELIVERY UNIT	1	1	1	1	
22	N8890331	. . FUEL PUMP	1	1	1	1	
23	N8890334	. . . RELIEF VALVE KIT	1	1	1	1	
24	N8890341	. . . PLUG HEX-HEAD / ORB FITTING / #2ORB-M BR	1	1	1	1	
25	N8890305	. . . ELBOW 1/4 ID HOSE x 1/8 NPT MALE	1	1	1	1	
26	N8890346	. . . ELBOW 1/4 JIC MALE x 1/8 NTP MALE	1	1	1	1	
27	N8890332	. . FUEL REGULATOR	1	1	1	1	
28	N8890333	. . . O-RING	2	2	2	2	
29	N8890335	. . SELENOID VALVE 24V	1	1	1	1	
30	N8890336	. . . O-RING	1	1	1	1	
31	N8890337	. . NOZZLE	1	1	1	1	
32	N8890338	. . . O-RING	1	1	1	1	
33	N8890339	. . FLAME SENSOR	1	1	1	1	
34	N8890340	. . FLAME SHIELD	1	1	1	1	
35	N8890342	. . ELECTRODE SPARK	1	1	1	1	
36	N8890348	. . . SET SCREW	1	1	1	1	
37	N8890343	. . ELECTRODE GROUND	1	1	1	1	
38	N8890329	. . SCREW CAP HEXS M4-0.7x10 ZP	3	3	3	3	
39	N8890344	. . WASHER LO SPT ZP M4	3	3	3	3	
40	N8890345	. . NUT HEX ZP M4x.7x10MM	1	1	1	1	

From Y-7257 To 4-8164		Date:07/2024	PAGE:871100

WATER HEATER - "PROHEAT" 80,000 B.T.U.

Item#	Part	Description	XLII 45	XLII MTH40	XLII MTH45	XLII MTH45E	NOTES
41	N8890303	. COMPRESSOR	1	1	1	1	
42	N8890304	. . SCREW SET #10-32x3/8	1	1	1	1	
43	N8890305	. . ELBOW 1/4 ID HOSE x 1/8 NPT MALE	2	2	2	2	
44	N8890307	. FUEL TUBE	1	1	1	1	
45	N8890296	. GROMMET STYLE " D "	2	2	2	2	
46	N8890308	. COUPLING 8MM	1	1	1	1	
47	N8890309	. FITTING 1/4 ID X 1/8 NPT MALE	1	1	1	1	
48	N8890310	. SPRING CLAMP	1	1	1	1	
49	N8890311	. HOSE 3/16 ID	AR	AR	AR	AR	
50	N8890312	. SCREW CAP HEXS M6-1.0x60 ZP	2	2	2	2	
51	N8890299	. SCREW CAP HEXS M6-1.0x20 ZP	2	2	2	2	
52	N8890300	. SCREW CAP HEXS M6-1.0x16 ZP	2	2	2	2	
53	N8890301	. WASHER LO SPT M6 ZP	6	6	6	6	
54	N8890313	. COVER	1	1	1	1	
55	N8890314	. AIR FILTER	1	1	1	1	
56	N8890315	. ELBOW 1/4 JIC MALE	1	1	1	1	
57	N8890316	. CONTROL MODULE 24V	1	1	1	1	
58	N8890317	. . FUSE HOLDER	1	1	1	1	
NS	560062	. . . FUSE / 15 AMPS / AGC-15	1	1	1	1	
60	N8890320	. . GROMMET	3	3	3	3	
61	N8890323	. . VINYL CAP	1	1	1	1	
62	N8890319	. SPACER	3	3	3	3	
63	N8890321	. MAIN HARNESS	1	1	1	1	
64	N8890322	. SUSTITUTION PLUG	1	1	1	1	
65	N8890324	. CLAMP SS #32	1	1	1	1	
66	N8890325	. BRACKET "J"	1	1	1	1	
67	N8890326	. IGNITION COIL	1	1	1	1	
68	N8890327	. IGNITION LEAD & BOOT	1	1	1	1	
69	N8890296	. GROMMET STYLE " D "	1	1	1	1	
70	N8890328	. WIRE CLIP	2	2	2	2	
71	N8890299	. SCREW CAP HEXS M6-1.0x20 ZP	2	2	2	2	
72	N8890300	. SCREW CAP HEXS M6-1.0x16 ZP	2	2	2	2	
73	N8890329	. SCREW CAP HEXS M4-0.7x10 ZP	1	1	1	1	
74	N8890302	. WASHER FL 1/4 ZP	3	3	3	3	
75	N8890301	. WASHER LO SPT M6 ZP	6	6	6	6	
76	N8890330	. WASHER FL ZP M4	2	2	2	2	
		FOLLOWING ITEMS ARE RELATED WITH					
		AUTOMATIC START					
		WITH WATER HEATER INSTALLATION					
		WITH BATTERIES CHARGER 110V					

From Y-7257 To 4-8164		Date:07/2024	PAGE:871100

WATER HEATER - "PROHEAT" 80,000 B.T.U.

Item#	Part	Description	XLII 45	XLII MTH40	XLII MTH45	XLII MTH45E	NOTES
111	066236	CABLE I/F BATTERIES CHARGER / W/RELAY BASE					A
111	068248	CABLE I/F BATTERIES CHARGER / W/RELAY BASE	1	1	1	1	A
112	066332	CABLE ASSY POWER / W/FUSE HOLDER & RECTIFIER					A
113	563332	RELAY 24V S.P.D.T. W/RESISTOR / "VOLVO" (20374662)					A
114	500946	SCREW TP BDG PH #8x1/2 N500					A
		A) LOCATED NEAR EVAPORATOR MOTOR RELAY					

From 4-8165 To 6-8906		Date:07/2024	PAGE:871329
WATER HEATER - "PROHEAT" 80,000 B.T.U.			

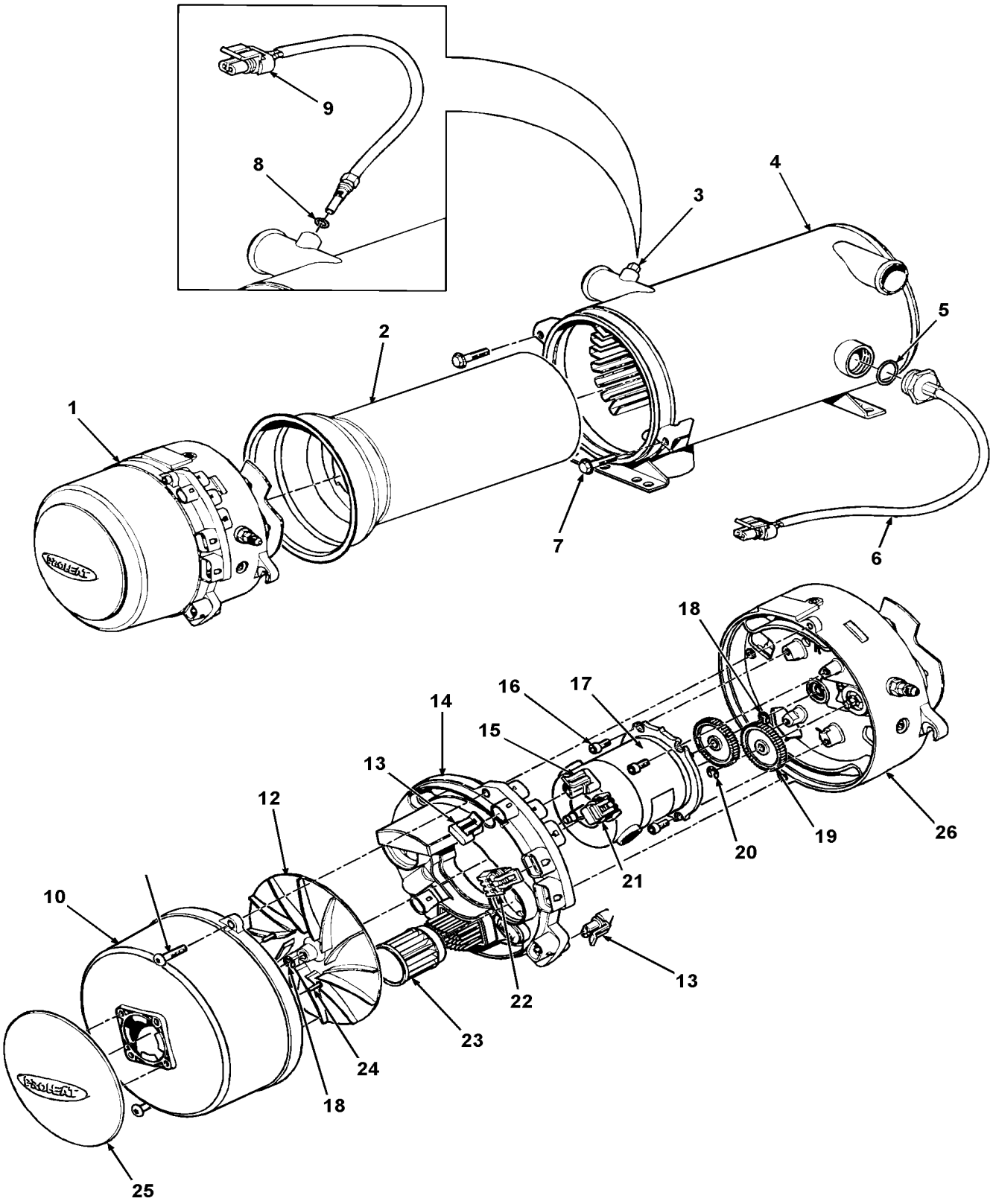

From 4-8165 To 6-8906		Date:07/2024	PAGE:871329
WATER HEATER - "PROHEAT" 80,000 B.T.U.			

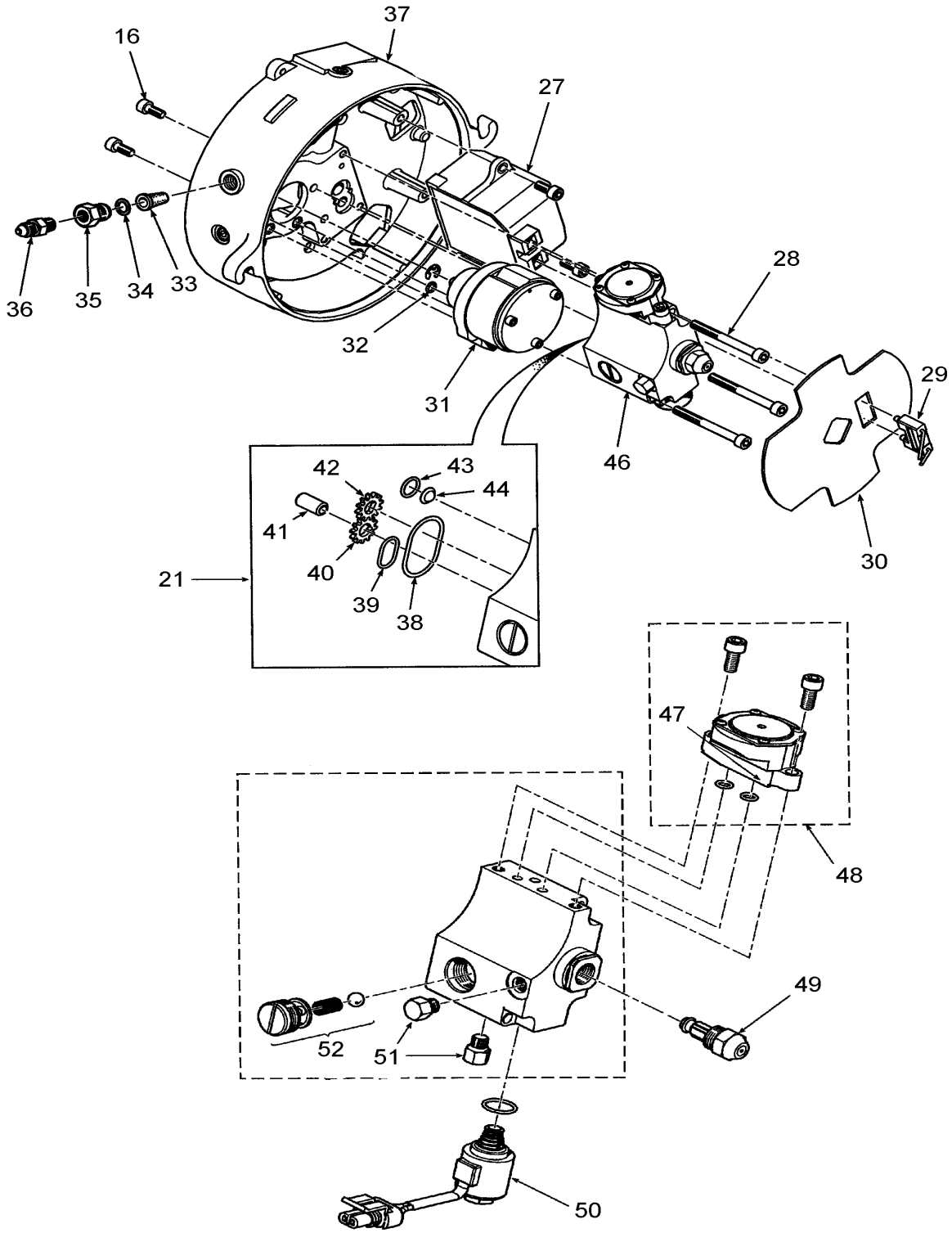

From 4-8165 To 6-8906		Date:07/2024	PAGE:871329

WATER HEATER - "PROHEAT" 80,000 B.T.U.

Item#	Part	Description	XLII 45	XLII MTH40	XLII MTH45	XLII MTH45E	NOTES
NS	065839	CABLE ASSY INTERFACE W/"PRO-HEAT" M-80 To 4-4887					
NS	066172	CABLE ASSY INTERFACE W/"PRO-HEAT" M-80 From 4-4888					
NS	065839	CABLE ASSY INTERFACE W/"PRO-HEAT" M-80 To 5-8366					
NS	066172	CABLE ASSY INTERFACE W/"PRO-HEAT" M-80 From 5-8367 To 7-8753					
NS	066172	CABLE ASSY INTERFACE W/"PRO-HEAT" M-80 From 7-8754					
		WATER HEATER - "PROHEAT" 80,000 B.T.U.	1	1	1	1	
1	N8892398	. BURNER HEAD ASSY	1	1	1	1	
2	N8892399	. COMBUSTION TUBE	1	1	1	1	
3	N8892400	. PLUG	1	1	1	1	
4	N8892401	. HEAT EXCHANGER	1	1	1	1	
5	N8892402	. O-RING, TEMPERATURE SENSOR, OVERHEAT	1	1	1	1	
6	N8892403	. TEMPERATURE SENSOR, OVERHEAT	1	1	1	1	
7	N8892405	. SCREW HEXW M8X1.25X30 (2/PKG)	1	1	1	1	
8	N8892406	. O-RING, TEMPERATURE SENSOR	1	1	1	1	
9	N8892407	. TEMPERATURE SENSOR, WITH O-RING	1	1	1	1	
10	N8892408	. BLOWER HOUSING	1	1	1	1	
11	N8892409	. SCREW CAP BUT HEXS SS M6X1X25 (2/PKG)	1	1	1	1	
12	N8892410	. BLOWER	1	1	1	1	
13	N8892411	. PLUG (2/PKG)	1	1	1	1	
14	N8892412	. PRIMARY CONTROL MODULE	1	1	1	1	
15	N8892413	. PLUG	1	1	1	1	
16	N8892414	. SCREW CAP HEXS M6-1.0x16 ZP	1	1	1	1	
17	N8892415	. MOTOR 24V	1	1	1	1	
18	N8892416	. RETAINING RING (3/PKG)	1	1	1	1	
19	N8892417	. GEAR SET	1	1	1	1	
20	N8892418	. RETAINING RING (2/PKG)	1	1	1	1	
21	N8892419	. PLUG, CAN BUS PRIMARY CONTROL MODULE	1	1	1	1	
22	N8892420	. PLUG, DATALINK PRIMARY CONTROL MODULE	1	1	1	1	
23	N8892421	. AIR FILTER	1	1	1	1	
24	N8892422	. SCREW, AIR INLET	1	1	1	1	
25	N8892423	. SPLASH GUARD	1	1	1	1	
26	N8892414	. SCREW CAP HEXS M6-1.0x16 ZP	1	1	1	1	
27	N8892426	. KIT IGNITION MODULE & ELECTRODE	1	1	1	1	
28	N8892427	. SCREW CAP HEXS SS M6X1X60 (3/PKG)	1	1	1	1	
29	N8892428	. IGNITION ELECTRODES	1	1	1	1	
30	N8892429	. FLAME SHIELD	1	1	1	1	
31	N8892430	. COMPRESSOR	1	1	1	1	
32	N8892431	. O-RING (3/PKG)	1	1	1	1	
33	N8892432	. FUEL FILTER	1	1	1	1	
34	N8892433	. O-RING, FUEL FILTER	1	1	1	1	
35	N8892434	. ADAPTER	1	1	1	1	
36	N8892435	. MALE CONNECTOR / JIC 37° FITTING / #4JIC-Mx1/8NPT-M BR	1	1	1	1	

From 4-8165 To 6-8906		Date:07/2024	PAGE:871329

WATER HEATER - "PROHEAT" 80,000 B.T.U.

Item#	Part	Description	XLII 45	XLII MTH40	XLII MTH45	XLII MTH45E	NOTES
37	N8892436	. BURNER HEAD FLANGE ASSY	1	1	1	1	
38	N8892437	. O-RING, GEAR PUMP	1	1	1	1	
39	N8892438	. O-RING, AIR INTAKE	1	1	1	1	
40	N8892439	. GEAR & PINION, FUEL PUMP	1	1	1	1	
41	N8892440	. IDLER SHAFT, FUEL PUMP	1	1	1	1	
42	N8892441	. GEAR DRIVE, FUEL PUMP	1	1	1	1	
43	N8892442	. O-RING, FUEL INTAKE	1	1	1	1	
44	N8892443	. SCREEN, INLET	1	1	1	1	
45	N8892444	. FUEL PUMP SERVICE KIT	1	1	1	1	
46	N8892445	. FUEL DELIVERY BLOCK ASM	1	1	1	1	
47	N8892446	. O-RING (3/PKG)	1	1	1	1	
48	N8892447	. REGULATOR ASM	1	1	1	1	
49	N8892448	. NOZZLE	1	1	1	1	
50	N8892449	. SOLENOID	1	1	1	1	
51	N8892450	. PLUG HEX-HEAD / ORB FITTING / #2ORB-M BR	1	1	1	1	
52	N8892451	. RELIEF VALVE KIT	1	1	1	1	
NS	N8892404	. PROHEAT DATA LINK KIT	1	1	1	1	
		FOLLOWING ITEMS ARE RELATED WITH					
		AUTOMATIC START					
		WITH WATER HEATER INSTALLATION					
		WITH BATTERIES CHARGER 110V					
111	066236	CABLE I/F BATTERIES CHARGER / W/RELAY BASE	1	1	1	1	A
111	068248	CABLE I/F BATTERIES CHARGER / W/RELAY BASE	1	1	1	1	A
111	066968	CABLE ASSY W/FUSE HOLDER / W/"PRO-HEAT" M-80 / "OPTION"	1	1	1	1	
112	066332	CABLE ASSY POWER / W/FUSE HOLDER & RECTIFIER	1	1	1	1	A
113	563332	RELAY 24V S.P.D.T. W/RESISTOR / "VOLVO" (20374662)	1	1	1	1	A
114	500946	SCREW TP BDG PH #8x1/2 N500	1	1	1	1	A
		A) USE WHEN YOU DO NOT HAVE A FIRE SUPPRESSIONS SYSTEMEUTILISE SEULEMENT					

From Y-7046 To 6-8906		Date:07/2024	PAGE:Y2-2355-00
BACK-UP CAMERA & MONITOR - INSTALLATION			

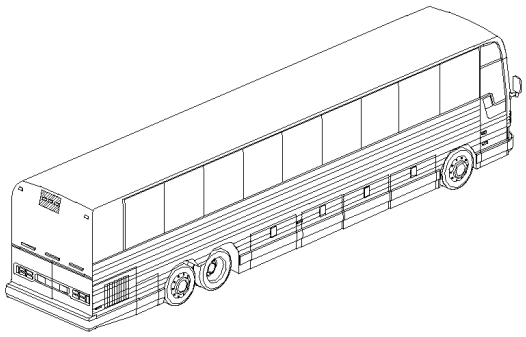

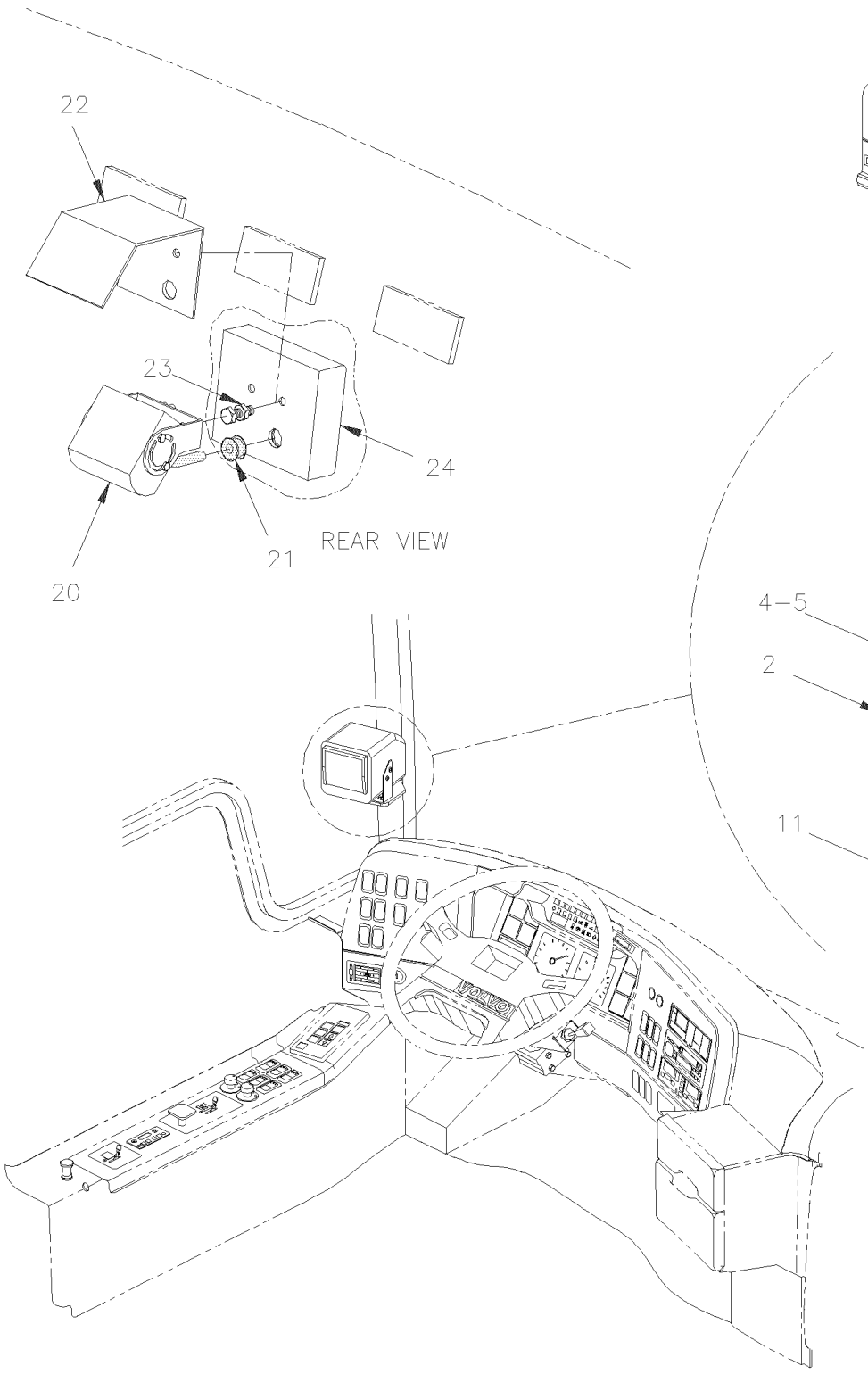

From Y-7046 To 6-8906		Date:07/2024	PAGE:Y2-2355-00

BACK-UP CAMERA & MONITOR - INSTALLATION

Item#	Part	Description	XLII 45	XLII MTH40	XLII MTH45	XLII MTH45E	NOTES
1	990334	MONITOR - "CLARION" / BLACK & WHITE 12 VOLT	1				
2	065063	CABLE ASSY / BACK-UP MONITOR	1				
. NS	990335	. CABLE MONITOR "CLARION"	1				
. NS	560851	. CONNECTOR / COM. MATE-N-LOCK / PH 4C / AMP 1-480426-0	1				
. NS	504397	. GROMMET / .750x1.062x.062x.375x1.375	1				
. NS	N.P.N.	. CABLE ASSY / BACK-UP MONITOR	AR				4
3	490900	MONITOR SUPPORT	1				
3	500552	SCREW TP OV PH #6x3/4 Z050	2				
3	500463	WASHER FN CKF .187x.500x.090 BR Z050	2				
4	500630	SCREW TP OV PH #10x1 Z050	3				
5	500465	WASHER FN CKF .278x.729x.119 SS	3				
6	500658	SCREW TC PAN PH #10-24x3/4 Z050	2				
9	500964	WASHER FL .203x.500x.047 Z050	2				
10	500767	NUT HEX #10-24 Z050	2				
11	327281	MOULDING HIDE CABLE	1				
20	990303	BACK-UP CAMERA - "CLARION" / BLACK & WHITE	1				
21	504625	GROMMET / .250x.750x.250x.437x1.000	1				
22	490853	PROTECTOR, CAMERA	1				
23	502737	SCREW CAP HEX M6-1.0x25 SS BK	3				
NS	502573	WASHER FL 6.4x12.5x1.6 SS	3				
NS	502570	WASHER LO SPT 6.1x11.8x1.6 SS	3				
24	680038	THREAD LOCKER LOCTITE #243 / BLUE / 50ml	AR				
24	680532	SEALANT SIKA #221 / GREY / 310ml CARTRIDGE	AR				
		4) NO PARTS NUMBER					

From Y-7046 To 6-8906		Date:07/2024	PAGE:Y2-2355-10
FRONT CAMERA - INSTALLATION			

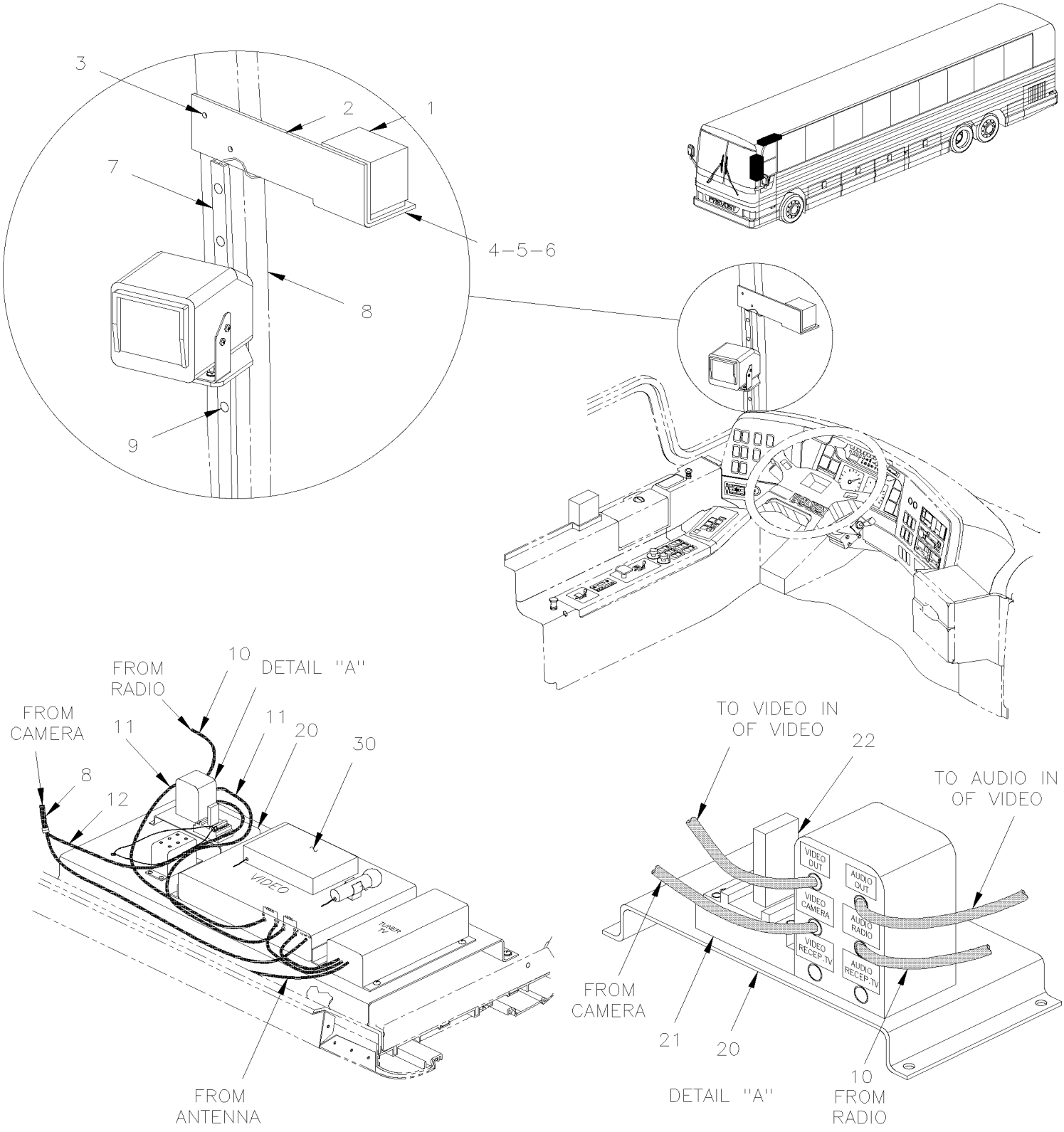

From Y-7046 To 6-8906		Date:07/2024	PAGE:Y2-2355-10

FRONT CAMERA - INSTALLATION

Item#	Part	Description	XLII 45	XLII MTH40	XLII MTH45	XLII MTH45E	NOTES
1	900914	FRONT CAMERA	1				
2	404905	SUPPORT / CAMERA	1				
3	500630	SCREW TP OV PH #10x1 Z050	1				
3	500465	WASHER FN CKF .278x.729x.119 SS	1				
4	500162	SCREW CAP HEX 1/4-20x1/2 G5 Z050	2				
5	500440	WASHER FL .250x.562x.065 Z050	2				
6	500473	WASHER LO SPT .262x.489x.062 Z050	2				
7	327332	MOULDING HIDE WIRE 587MM	1				
8	900912	CABLE ASSY / FRONT CAMERA	1				
NS	900918	CABLE RCA / 1M/1F/ 3'	1				
9	500552	SCREW TP OV PH #6x3/4 Z050	4				
NS	500463	WASHER FN CKF .187x.500x.090 BR Z050	4				
10	900866	CABLE RCA / 1M/1M / 25'	1				
10	900671	ADAPTOR "Y" RCA / 1M/2F / 4"	1				
10	900758	ADAPTOR "Y" RCA / 1F/2M / 9"	1				
11	900856	CABLE RCA / 2M/2M / 3'	2				
12	900913	CABLE ASSY / VIDEO & FRONT CAMERA	1				
20	404701	. RELAY AND RCA PLUG PLATE ASSY To 4-8270	1				
20	405495	. RELAY AND RCA PLUG PLATE ASSY From 4-8271	1				
NS	404703	. PLATE MOUNTING	1				
NS	500576	. SCREW TC PAN PH #6-32x1/2 Z050	4				
NS	500467	. WASHER LO INT .138x.275x.019 Z050	4				
21	562937	. BASE SOCKET	1				
22	562936	. RELAY 24V 4.P.D.T.	1				
NS	562169	. DIODE / 1AMP	1				
22	562122	. PIN TERMINAL / 20-14 / AMP 350547-1 From 4-8271	2				
22	561248	. CONNECTOR / UNIVERSAL MATE-N-LOK / PH 2C / AMP 1-480699-0 From 4-8271	1				
30	**Y2-2317-20**	**VIDEO VHS PLAYER - INSTALLATION "R.E.I."**					
NS	405324	ANGLE SUPPORT CAMERA "SCENIC"	1				A
NS	405325	SUPPORT CAMERA "SCENIC"	1				A
NS	500162	SCREW CAP HEX 1/4-20x1/2 G5 Z050	2				A
NS	500440	WASHER FL .250x.562x.065 Z050	2				A
NS	500473	WASHER LO SPT .262x.489x.062 Z050	2				A
		A) THOSE ITEMS ARE USE WITH INSTALLATION ON CENTER POST WINDSHIELD					

From Y-7046 To 6-8906		Date:07/2024	PAGE:Y2-2370-10
W.C.L. - DECAL			

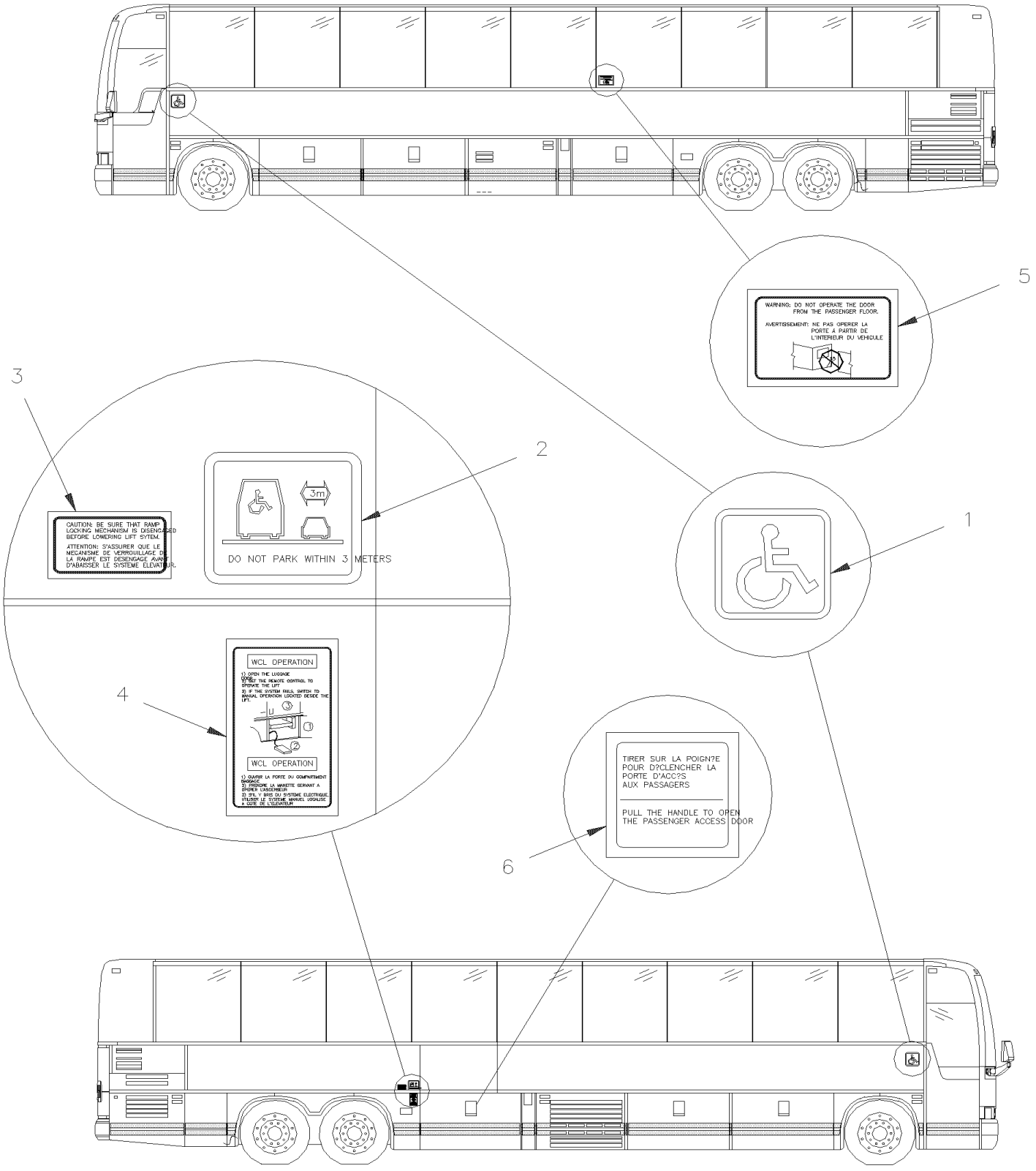

From Y-7046 To 6-8906		Date:07/2024	PAGE:Y2-2370-10
W.C.L. - DECAL			

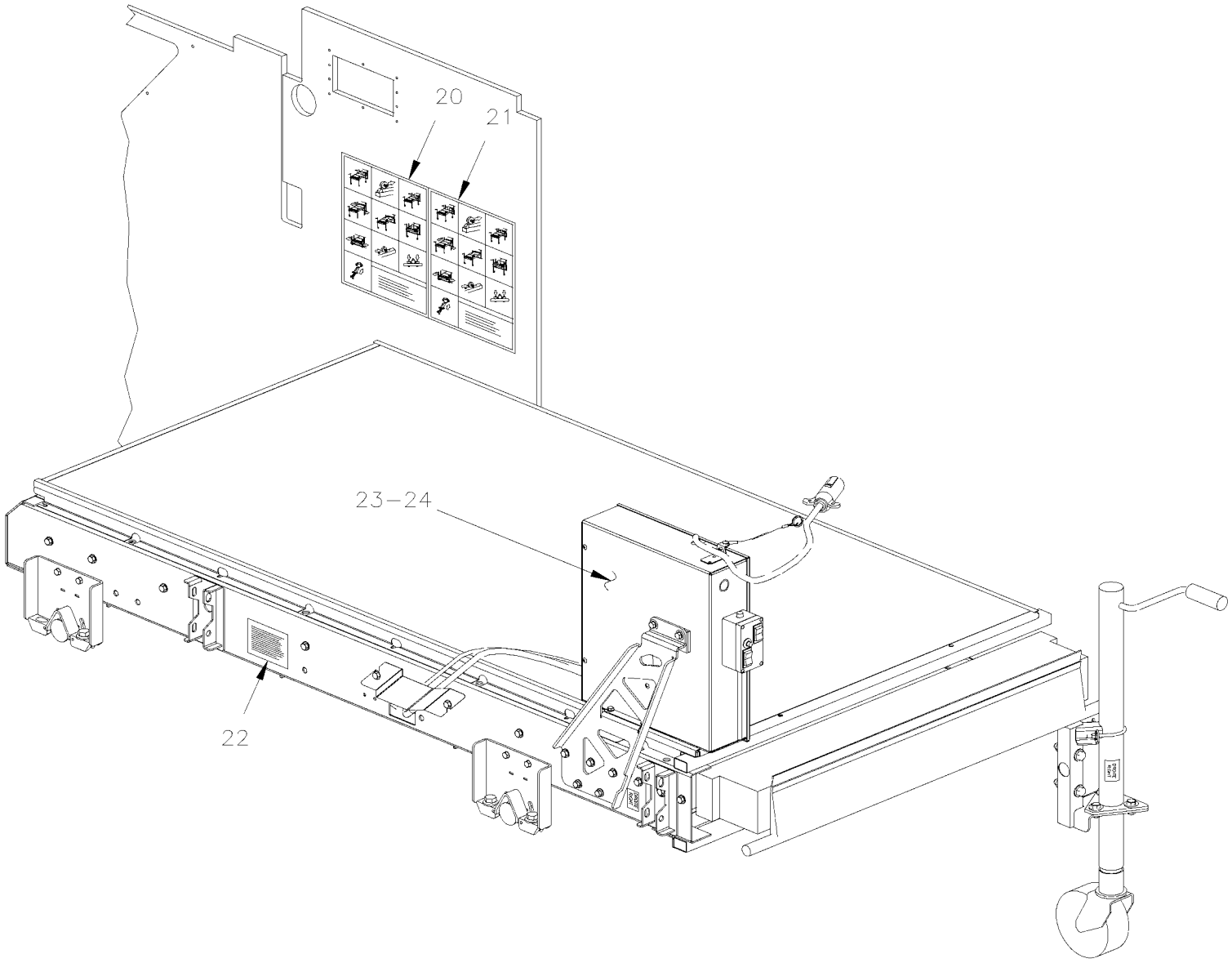

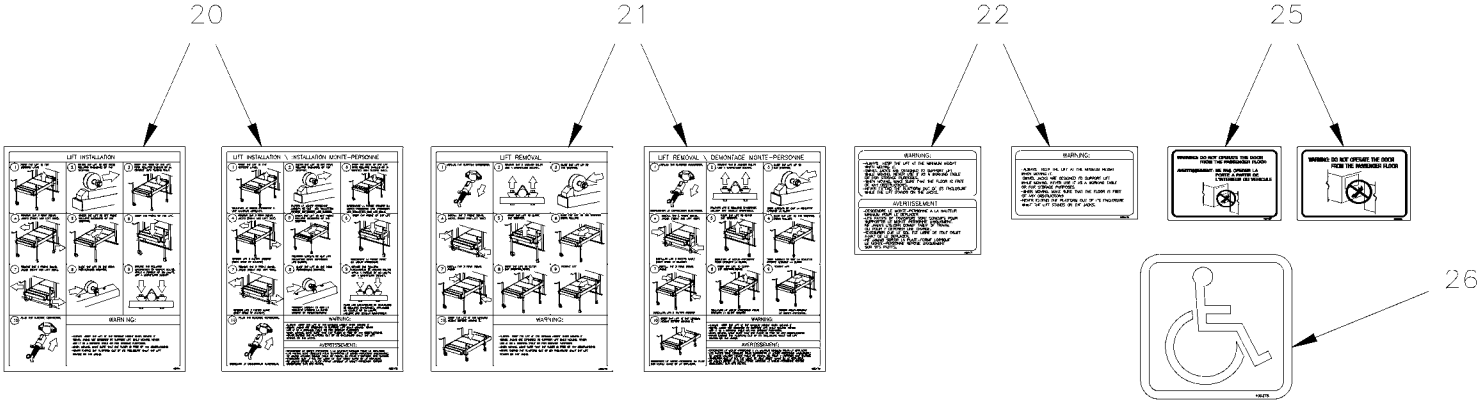

From Y-7046 To 6-8906		Date:07/2024	PAGE:Y2-2370-10

W.C.L. - DECAL

Item#	Part	Description	XLII 45	XLII MTH40	XLII MTH45	XLII MTH45E	NOTES
1	404087	DECAL / BLUE W/CHAIR / 180MM x 180MM	1				
2	404083	DECAL / DO NOT PARK WITHIN 3 METRES / ENGLISH & FRANCAIS	1				A
2	404089	DECAL / DO NOT PARK WITHIN 3 METRES / ENGLISH	1				
3	403898	DECAL / "WARNING" WHEN OPENING DOOR BEWARE.. / ENGLISH & FRANCAIS	1				A
3	404332	DECAL / "WARNING" WHEN OPENING DOOR BEWARE.. / ENGLISH	1				
4	405165	DECAL / WCL OPERATION 1. 2.3.	1				A
4	405166	DECAL / WCL OPERATION 1. 2.3.	1				
5	405167	DECAL / DO NOT OPERAT. DOOR / ENGLISH & FRANCAIS	1				A
5	405168	DECAL / DO NOT OPERAT. DOOR / ENGLISH	1				
6	405169	DECAL / PULL THE HANDLE.. / ENGLISH & FRANCAIS	1				
6	405170	DECAL / PULL THE HANDLE.. / ENGLISH	1				A
20	405474	DECAL / PICTOGRAM LIFT INSTALL… / ENGLISH To 5-8605	1				
20	405745	DECAL / PICTOGRAM LIFT INSTALL… / ENGLISH From 5-8606	1				
20	405475	DECAL / PICTOGRAM LIFT INSTALL…/ MONTAGE / ENGLISH & FRANCAIS To 5-8605	1				
20	405746	DECAL / PICTOGRAM LIFT INSTALL…/ MONTAGE / ENGLISH & FRANCAIS From 5-8606	1				
20	405654	DECAL / PICTOGRAM LIFT INSTALL… / ENGLISH & SPANISH To 5-8605	1				
20	405742	DECAL / PICTOGRAM LIFT INSTALL… / ENGLISH & SPANISH From 5-8606	1				
21	405472	DECAL / PICTOGRAM LIFT REMOVAL / DEMONTAGE.. / ENGLISH & FRANCAIS To 5-8605	1				
21	405744	DECAL / PICTOGRAM LIFT REMOVAL / DEMONTAGE.. / ENGLISH & FRANCAIS From 5-8606	1				
21	405473	DECAL / PICTOGRAM LIFT REMOVAL / ENGLISH To 5-8605	1				
21	405743	DECAL / PICTOGRAM LIFT REMOVAL / ENGLISH From 5-8606	1				
21	405653	DECAL / PICTOGRAM LIFT REMOVAL / ENGLISH & SPANISH To 5-8605	1				
21	405741	DECAL / PICTOGRAM LIFT REMOVAL / ENGLISH & SPANISH From 5-8606	1				
22	405471	DECAL / "WARNING" ALWAY KEEP THE LIFT AT T... / ENGLISH & FRANCAIS	1				
22	405470	DECAL / "WARNING" ALWAY KEEP THE LIFT AT T... / ENGLISH	1				
23	405469	DECAL / INSTRUCTION D'OPÉRATION MANUEL / FRENCH	1				
24	405503	DECAL / RICON W.C.L. OPERATING INSTRUCTION / ENGLISH To 5-8605	1				
24	405749	DECAL / RICON W.C.L. OPERATING INSTRUCTION EXIT / ENGLISH From 5-8606	1				
24	405504	DECAL / INSTRUCTION D'OPÉRATION DE L'ÉLÉVATEU / FRENCH To 5-8605	1				
24	405750	DECAL / RICON W.C.L. OPERATING INSTRUCTION EXIT / ENGLISH & FRANCAIS From 5-8606	1				
25	405468	DECAL / MANUAL OPERATING INSTRUCTION... / ENGLISH	1				
25	405467	DECAL / INSTRUCTION D'OPÉRATION DE L'ÉLÉVATEU / FRENCH	1				
26	405378	DECAL / BLUE W/CHAIR / 102MM x 102MM	1				
		A) BILINGUAL FRENCH & ENGLISH					

From Y-7046 To 6-8906		Date:07/2024	PAGE:Y2-2370-20
W.C.L. SEAT BELTS			

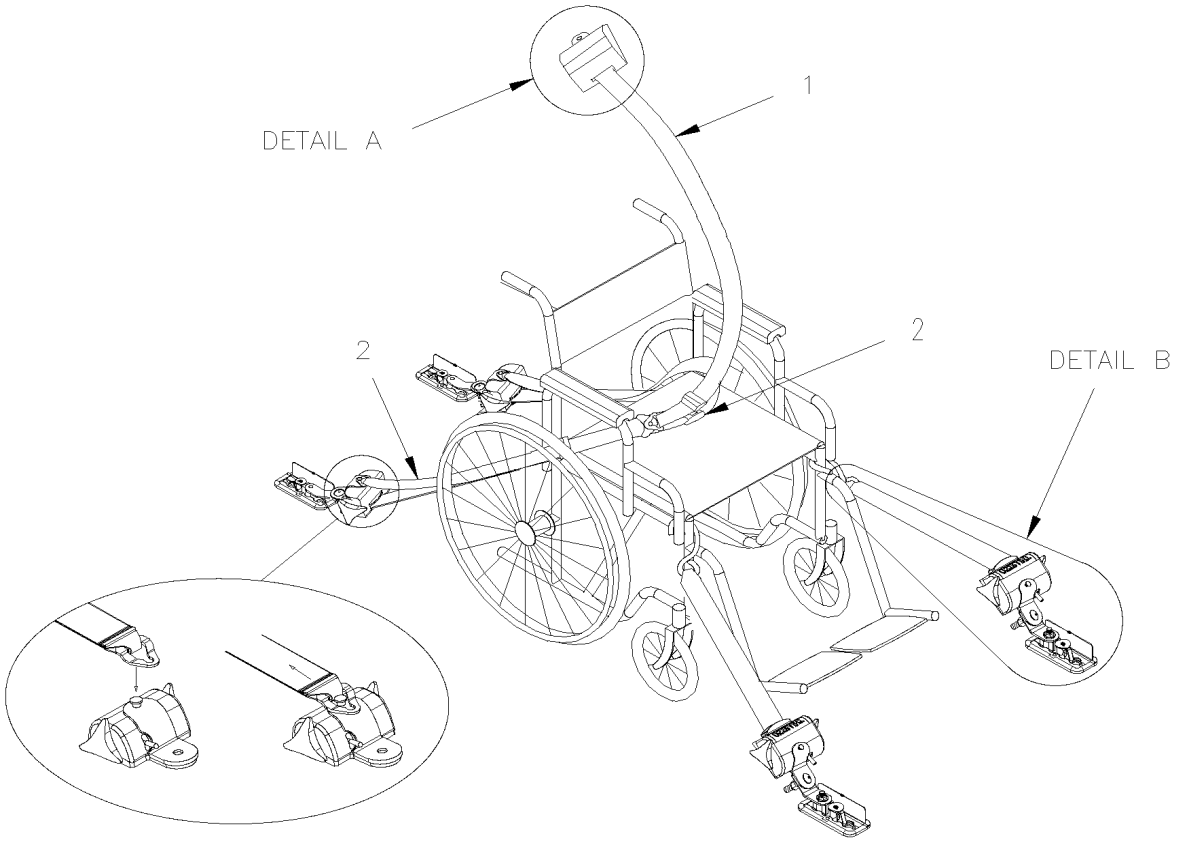

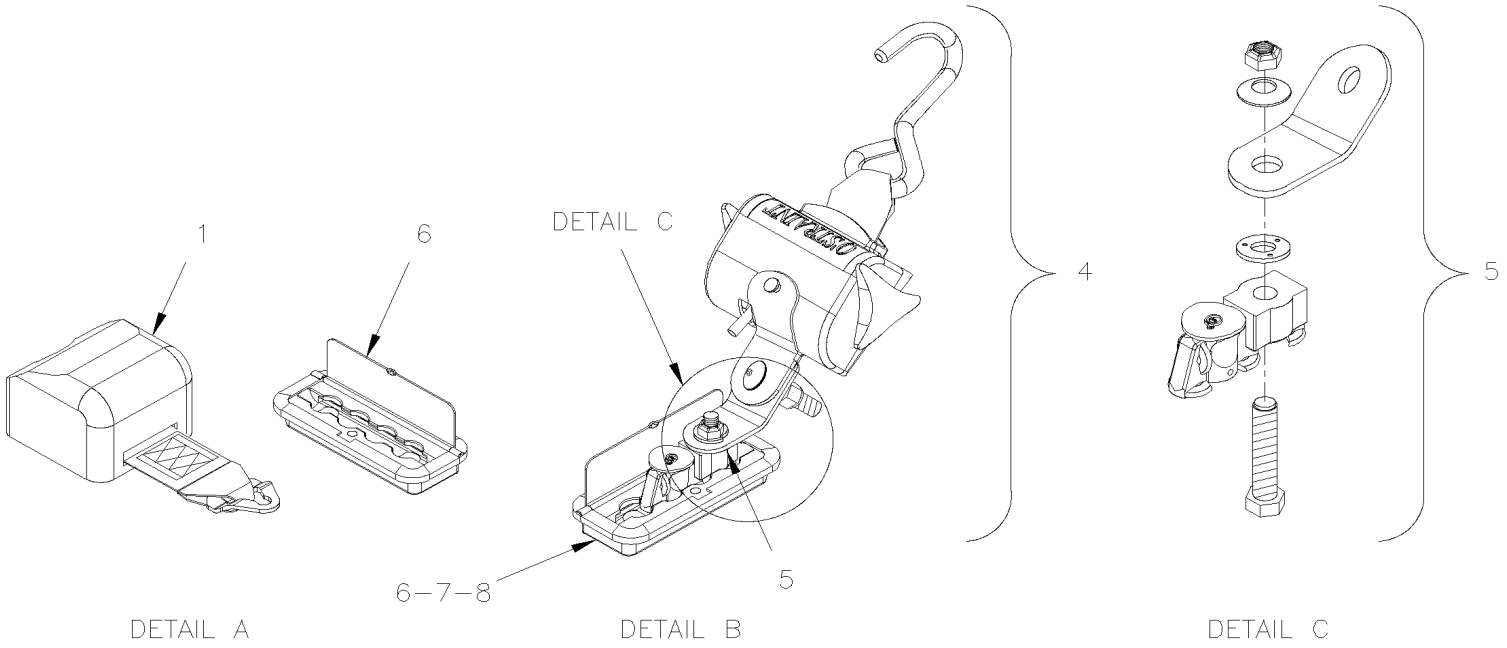

From Y-7046 To 6-8906		Date:07/2024	PAGE:Y2-2370-20

W.C.L. SEAT BELTS

Item#	Part	Description	XLII 45	XLII MTH40	XLII MTH45	XLII MTH45E	NOTES
	861930	KIT SAFETY BELT	AR				A
1	861931	. RETRACTALE SHOULDER BELT	1				
2	861932	. REGULAR LAP BELT / KIT MALE & FEMALE	1				
4	861934	. RETACTABLE SEAT MOUNTED / BELT ASSY (SET OF 4 W/TRAC ADAPTOR)	1				
5	861935	. . KIT TRAC ADAPTOR	4				
6	861929	FLOOR POCKET W/COVER	8				
NS	862213	SCREW CAP CK HEXS 5/16-18x1 3/4 SS	2				
7	223822	SPACER 1/2" O.D. X 20MM	16				
8	223818	ANCHOR PLATE	8				
NS	862967	SAFETY BELT CUTTER / W.C.L. / EMERGENCY	1				
		A) INCLUDE ITEMS 1, 2, 3, 4, 5 & 7					

From Y-7046 To 1-7680		Date:07/2024	PAGE:Y2-2380-00
W.C.L. "RICON" - INSTALLATION MODEL "F9A"			

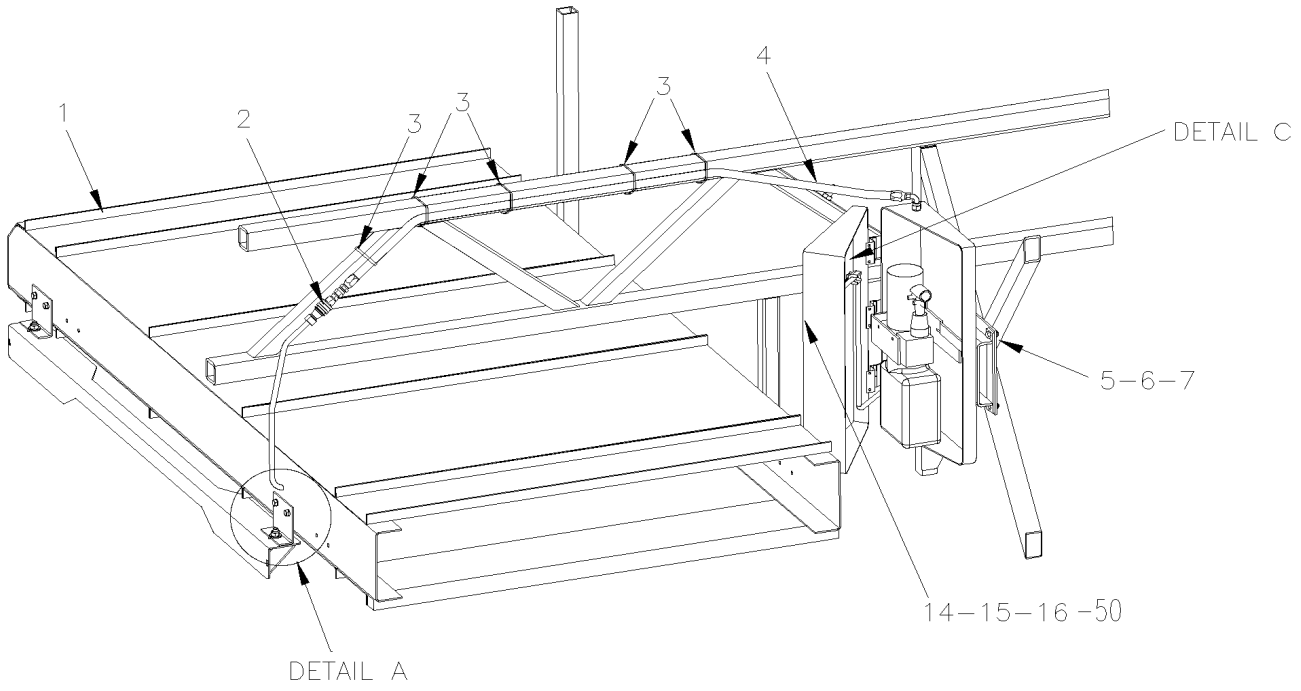

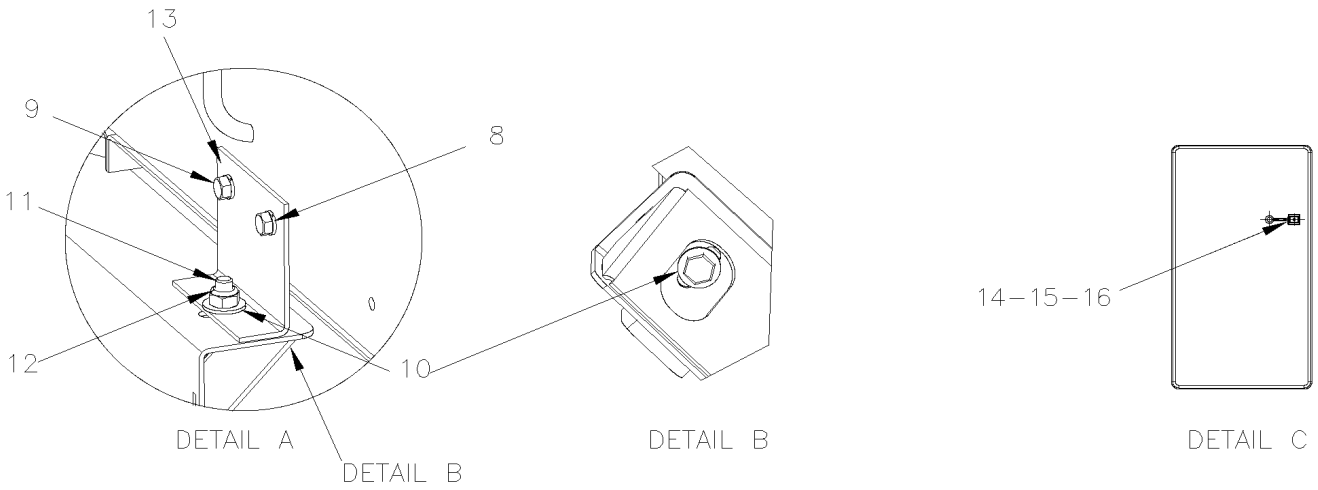

From Y-7046 To 1-7680		Date:07/2024	PAGE:Y2-2380-00

W.C.L. "RICON" - INSTALLATION MODEL "F9A"

Item#	Part	Description	XLII 45	XLII MTH40	XLII MTH45	XLII MTH45E	NOTES
1	**Y2-2380-05**	**W.C.L. "RICON" MODEL "F9A"**					
2	501687	MALE CONNECTOR / JIC 37° FITTING / #6JIC-Mx1/4NPT-M STL	1				
3	504637	CABLE TIE / 3/16" x 13"	5				
4	483364	HOSE ASSY / #6 1200MM	1				
5	500868	NUT HEX NYRT M8-1.25 Z050	4				
6	502510	WASHER FL .375x.875x.083	4				
7	502790	SCREW CAP HEX M8-1.25x20 G8.8 Z050	4				
8	500035	WASHER LO SPT .317x.586x.078 SS	8				
9	500179	SCREW CAP HEX 5/16-18x3/4 G5 Z050	8				
10	500445	WASHER FL .437x1.000x.083 Z050	8				
11	502559	SCREW CAP HEX M10-1.5x25 G8.8 Z050	4				
12	500680	NUT HEX STO M10-1.5 Z050	4				
13	327376	SUPPORT	4				
14	561815	CLAMP W/ 2 / ITT CANNON 029-0263-000	1				
15	502637	WASHER FL .200x.437x.037 SS	1				
16	504118	RIVET POP DOME OE 3/16x3/8 AL	1				
50	**Y2-2380-60**	**W.C.L. "RICON" - PUMP INSTALLATION MODEL "F9A"**					

From 1-7681 To 4-8330		Date:07/2024	PAGE:Y2-2380-01
W.C.L. "RICON" - INSTALLATION MODEL "HC-L002"			

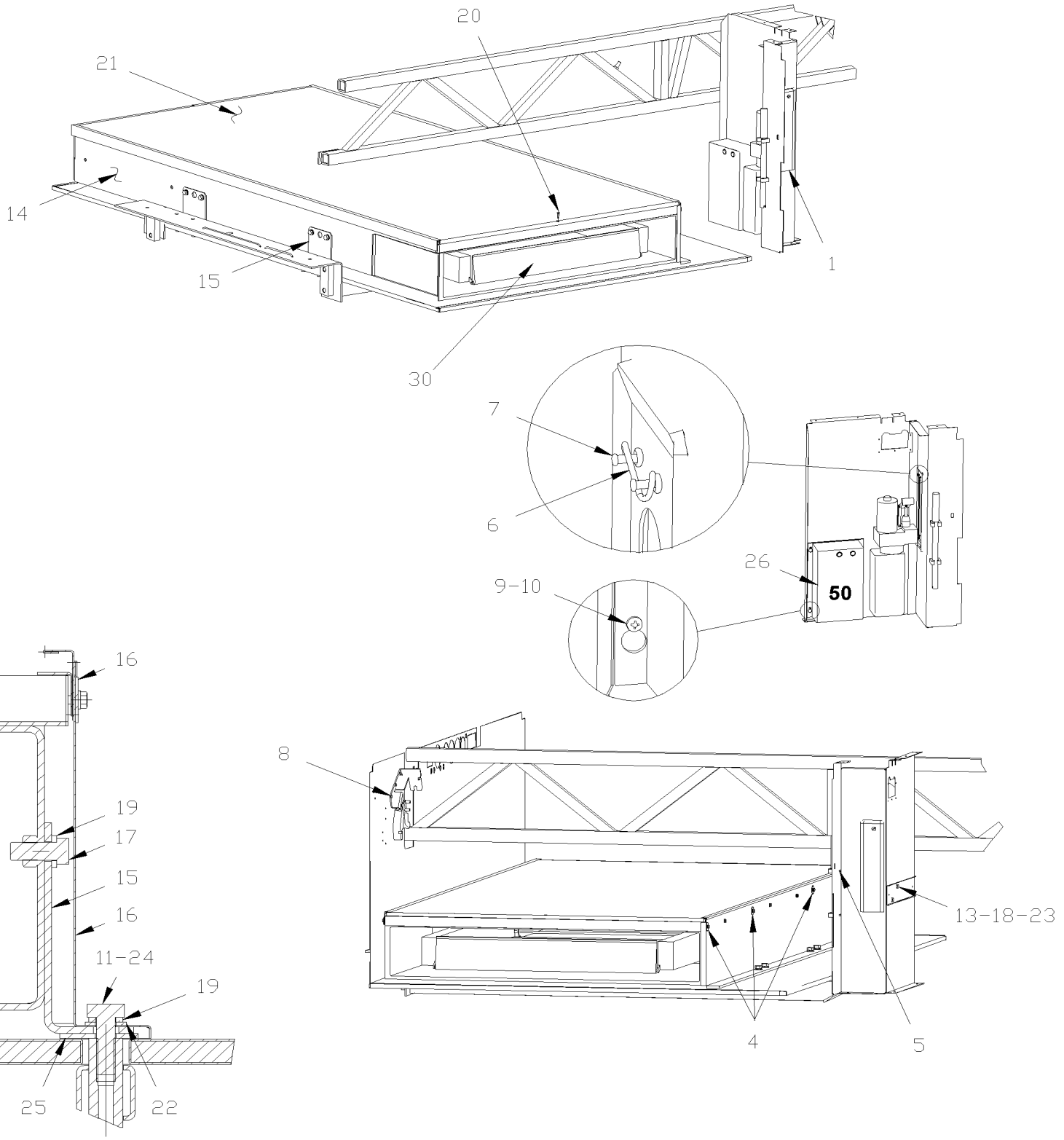

From 1-7681 To 4-8330		Date:07/2024	PAGE:Y2-2380-01

W.C.L. "RICON" - INSTALLATION MODEL "HC-L002"

Item#	Part	Description	XLII 45	XLII MTH40	XLII MTH45	XLII MTH45E	NOTES
1	032475	ACCESS DOOR / A/C COMPARTMENT 86MM x 353MM	1				
1	033182	ACCESS DOOR W/HINGE / A/C COMPARTMENT	1				
. NS	033882	. DOOR	1				
. NS	033183	. HINGE	1				
. NS	901052	. LATCH RUBBER	1				
. NS	506071	. TAPE RUB ADH1 CC POL 1/8" x 1/2" x 50' / GREY 2520X	AR				
4	500468	WASHER FL .281x1.250x.065 Z050	4				
5	504248	RIVET CHY Q PRDG 3/16x1/4 SS	2				
6	504365	SPRING HOOK / DZUS 5/16	1				
7	504339	RIVET POP DOME OE 1/8x3/8 SS	2				
8	504459	RIVET MGLP PRDG 1/4x3/8 SS	8				
9	500750	SCREW MA TR PH M4-0.7x18 Z050	5				
10	500022	WASHER LO INT .168x.340x.023 Z050	5				
11	680064	OIL ANTICOROSIVE GREY (TECTYL) (20 LITERS)	AR				
12	500341	SCREW SET HEXS CUP M12-1.75x20	8				
13	504636	HOLE PLUG BUTTON / .312 O.D. BLACK	2				
14	862026	W.C.L. "RICON" - HC-L002	1				
15	212767	ANGLE	4				
16	482735	SIDE PANEL PROTECTOR	1				
17	500850	SCREW CAP HEX M12-1.75X25 G8.8 Z050	8				
18	500845	SCREW CAP HEX 5/16-18x1/2 G5 Z050	2				
19	500482	WASHER LO SPT .506x.873x.125 Z050	16				
20	5001118	SCREW TP FL PH #8x1 SS410	2				
21	482654	PANEL BAGGAGE FLOOR	1				
22	500958	WASHER FL .531x1.062x.095 SS	8				
23	500476	WASHER LO SPT .317x.586x.078 Z050	2				
24	502731	SCREW CAP HEX M12-1.75x40 G8.8 Z050	8				
25	213921	PLATE	4				
26	065536	BOX TERMINAL PROTECTOR	1				
30	**Y2-2380-06**	**W.C.L. "RICON" MODEL "HC-L002"**					
50	**Y2-2380-61**	**W.C.L. "RICON" - PUMP INSTALLATION MODEL "HC-L002" To 4-8278**					
50	**Y2-2380-62**	**W.C.L. "RICON" - PUMP INSTALLATION MODEL "F9T" & "F9TF" From 4-8279**					

From 4-8331 To 6-8906		Date:07/2024	PAGE:Y2-2380-02
W.C.L. "RICON" REMOVABLE - INSTALLATION MODEL "F9T" & "F9TF"			

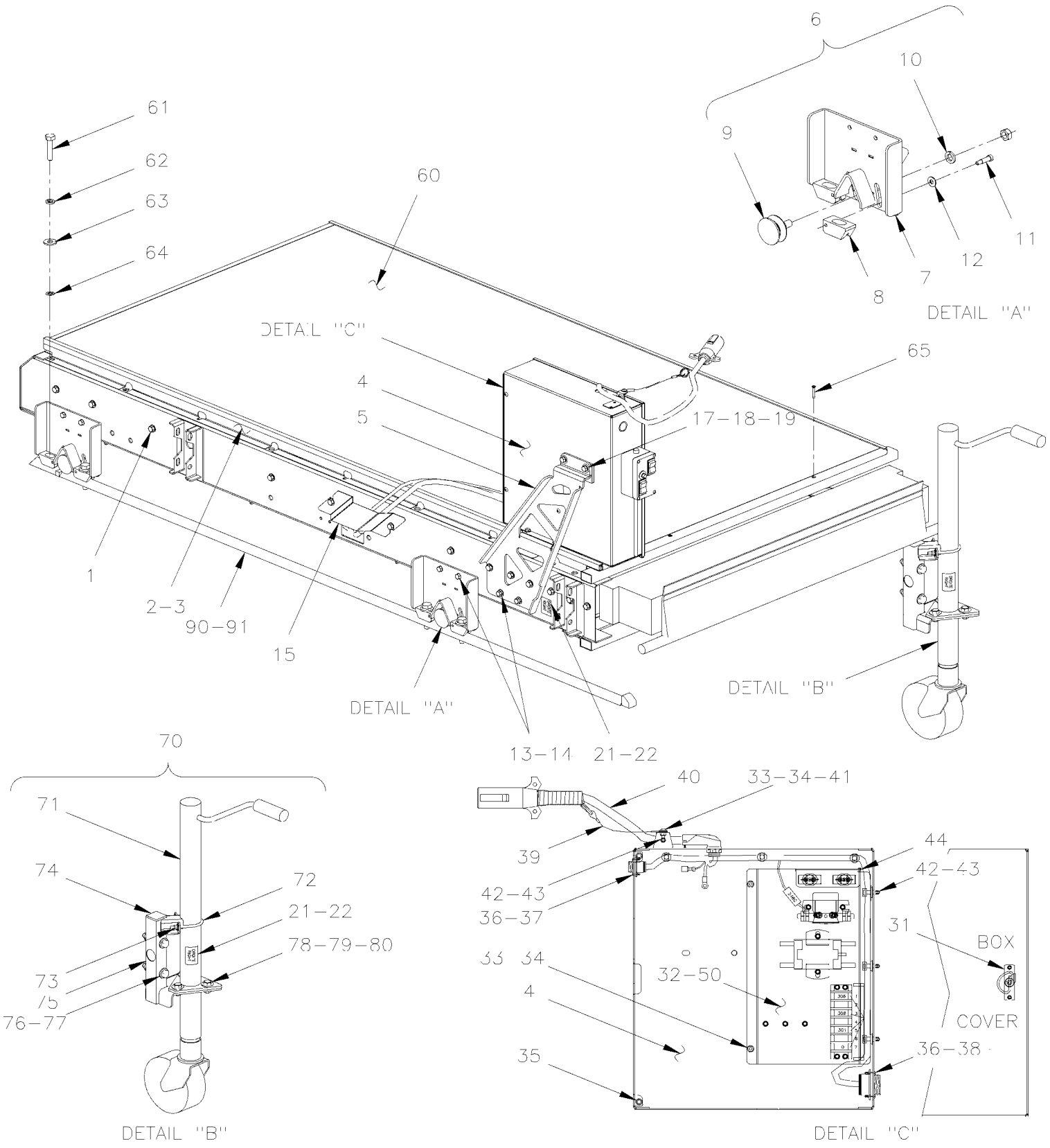

From 4-8331 To 6-8906		Date:07/2024	PAGE:Y2-2380-02

W.C.L. "RICON" REMOVABLE - INSTALLATION MODEL "F9T" & "F9TF"

Item#	Part	Description	XLII 45	XLII MTH40	XLII MTH45	XLII MTH45E	NOTES
	490891P	REMOVABLE W.C.L. COMPLETE ASSY W/ PUMP BOX ASSY / "F9TF"	1				A
1	862352	W.C.L. "RICON" - F9T-DE004 From RETROFIT	1				
1	862662	W.C.L. "RICON" - F9TF-DE004	1				
2	490971	SLIDING TRACK REMOVABLE R.H.	1				
3	490990	SLIDING TRACK REMOVABLE L.H.	1				
4	364035	BOX ASSY	1				
5	364029	SUPPORT PUMP ASSY	1				
6	491008	CARRIER ASSY / W/WHEEL	4				
7	490998	. PLATE SUPPORT	1				
8	490995	. CALIPER	1				
9	990418	. WHEEL / W/"V" GROOVE USE W/SCREW	1				
NS	500652	. NUT HEX 1/2-20 SS	1				
10	500944	. WASHER LO SPT .506x.873x.125 N500	2				
11	502638	. WASHER FL .312x.734x.065 N500	2				
12	500631	. SCREW SHR HEXS 5/16x3/4 {1/4-20 SS	2				
13	955525	SCREW CAP HEX 5/16-18x1 G5 ZG603	10				
14	500942	WASHER LO SPT 8.1x14.8x2.0 N500	10				
NS	502638	WASHER FL .312x.734x.065 N500	2				
15	491013	PLATE PROTECTOR	1				
17	500347	SCREW CAP HEX 5/16-18x1 1/4 SS	2				
NS	364031	SPACER	2				
18	5001448	WASHER FL .343x.875x.062 SS18-8	2				
19	500035	WASHER LO SPT .317x.586x.078 SS	2				
21	491002	DECAL / GAUCHE / LEFT / ENGLISH & FRANCAIS	1				
21	491056	DECAL / LEFT IZQUIERDA / ENGLISH & SPANISH	1				
22	491001	DECAL / DROIT / RIGHT / ENGLISH & FRANCAIS	1				
22	491055	DECAL / RIGHT DERECHA / ENGLISH & SPANISH	1				
30	491033	BOX ASSY W/POWER PLATE	1				
31	504203	SPRING LATCH / KNURLED STEEL KNOB	1				
NS	504105	RIVET POP DOME OE 1/8x3/16 AL	2				
32	563370	POWER PLATE ASSY "RICON"	1				
33	5001180	NUT HEX NYRT #10-24 SS	5				
34	5001241	SCREW MA TR PH #10-24x1/2 SS	5				
35	504498	BUMPER PLUG / .406ODx.218THx.250HOLEx.125	2				
36	500518	SCREW MA BDG PH #4-40x1/2 Z050	8				
37	561820	NUT, RING #13 / 1.125" I.D. W/4 4-40	1				
38	561823	NUT, RING #23 / 1.812" I.D. W/4 4-40	1				
39	502929	CABLE RETAINING 150MM	1				
40	065857	CABLE ASSY / POWER / W.C.L. "RICON"	1				
41	500964	WASHER FL .203x.500x.047 Z050	1				
42	509815	TIE MOUNT / ATTACHMENT W/TREE MOUNT	AR				
43	504637	CABLE TIE / 3/16" x 13"	AR				

From 4-8331 To 6-8906		Date:07/2024	PAGE:Y2-2380-02

W.C.L. "RICON" REMOVABLE - INSTALLATION MODEL "F9T" & "F9TF"

Item#	Part	Description	XLII 45	XLII MTH40	XLII MTH45	XLII MTH45E	NOTES
44	506338	RUBBER CHANNEL / 1/16" x 1/4" INT "U" SHAPE / ROUND C.T.L.	AR				
NS	680066	ADHESIVE / ADBOND #5014 / 23.6ML BOTTLE	AR				
50	**Y2-2380-61**	**W.C.L. "RICON" - PUMP INSTALLATION MODEL "HC-L002" To 4-8278**					
50	**Y2-2380-62**	**W.C.L. "RICON" - PUMP INSTALLATION MODEL "F9T" & "F9TF" From 4-8279**	1	1	1	1	
60	990417	PANEL FIBERGLASS / OVER W.C.L. "RICON" / 1000MM X 1940MM	1				
61	5001538	SCREW CAP HEXF SERR M12-1.75x50 G500	8				
62	500944	WASHER LO SPT .506x.873x.125 N500	8				
64	5001568	NUT PUSH RND M12 ZP	8				
65	502903	SCREW TC FL PH #10-24x1 1/4 N500	2				
67	864071	HARNESS, ELECTRICAL, MAIN, W/HYDRAULIC LINE	1				
70	490988P	TRANSPORTER JACK ASSY L.H.	2				
70	490989P	TRANSPORTER JACK ASSY R.H.	2				
71	990416	. JACK	1				
72	503399	. U-CLAMP / 2" I.D. X 1/4-20	1				
73	500769	. NUT HEX 1/4-20 Z050	2				
NS	500441	. WASHER FL .312x.734x.065 Z050	2				
NS	500473	. WASHER LO SPT .262x.489x.062 Z050	2				
74	508394	. GLIDE SQUARE END 1.5 X 1.5 TUBE 14GA / P	1				
75	490981	. SUPPORT JACK L.H.	1				
75	490982	. SUPPORT JACK R.H.	1				
76	5001862	. SCREW CAP HEX M12-1.75x70 G10.9 N500	2				
77	500860	. NUT HEX M12-1.75 Z050	2				
NS	500958	. WASHER FL .531x1.062x.095 SS	4				
78	502559	. SCREW CAP HEX M10-1.5x25 G8.8 Z050	3				
79	502644	. WASHER FL 10.5x30.0x2.5 Z050	3				
80	500680	. NUT HEX STO M10-1.5 Z050	3				
90	215121	TRACK W.C.L. BACKWARD	1				
91	255122	TRACK W.C.L. FORWARD	1				
100	**Y2-2380-61**	**W.C.L. "RICON" - PUMP INSTALLATION MODEL "HC-L002" To 4-8278**					
101	**Y2-2380-62**	**W.C.L. "RICON" - PUMP INSTALLATION MODEL "F9T" & "F9TF" From 4-8279**					
		A) DO NOT INCLUSDED TRANSPORTER JACK L.H. & R.H.					

From Y-7046 To 1-7680		Date:07/2024	PAGE:Y2-2380-05
W.C.L. "RICON" MODEL "F9A"			

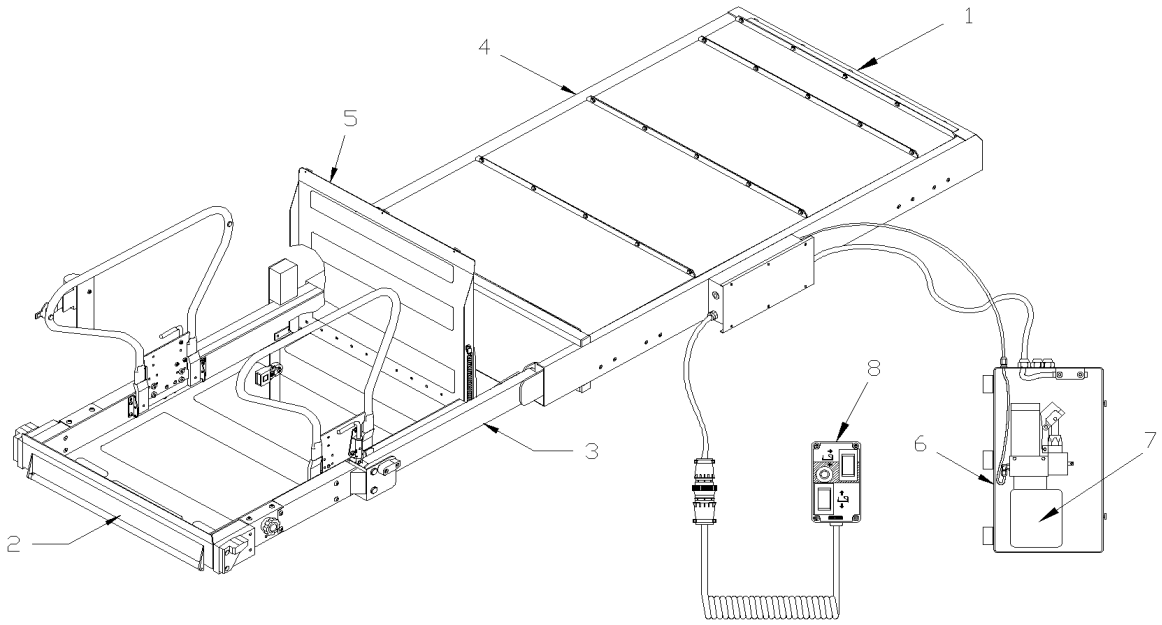

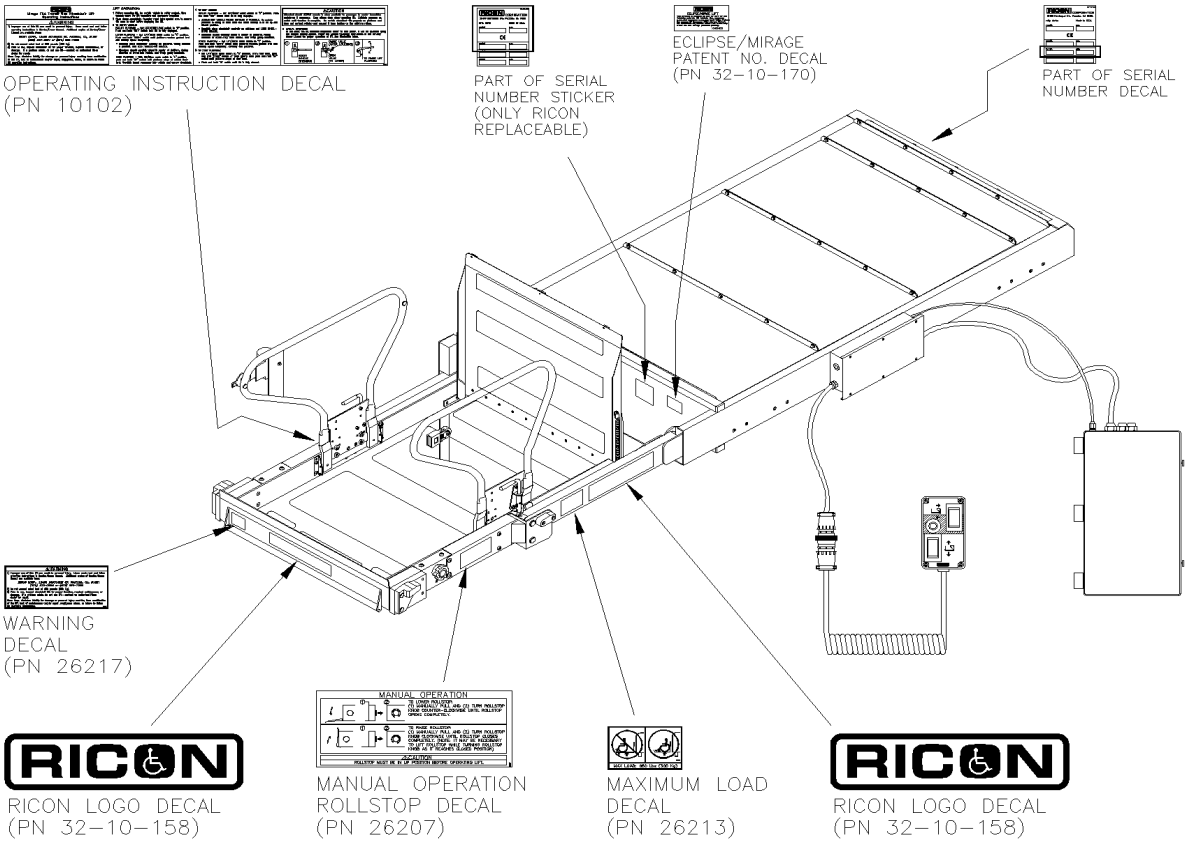

From Y-7046 To 1-7680		Date:07/2024	PAGE:Y2-2380-05

W.C.L. "RICON" MODEL "F9A"

Item#	Part	Description	XLII 45	XLII MTH40	XLII MTH45	XLII MTH45E	NOTES
	861928	W.C.L. "RICON" - F9A	1				
1	**Y2-2380-10**	**. W.C.L. "RICON" - LIFT ENCLOSURE ASSY MODEL "F9A"**					
2	**Y2-2380-20**	**. W.C.L. "RICON" - PLATFORM ASSY MODEL "F9A"**					
3	**Y2-2380-30**	**. W.C.L. "RICON" - TRAVELING FRAME ASSY MODEL "F9A"**					
4	**Y2-2380-40**	**. W.C.L. "RICON" - CARRIAGE ASSY MODEL "F9A"**					
5	**Y2-2380-50**	**. W.C.L. "RICON" - BRIDGE PLATE ASSY 9" MODEL "F9A"**					
6	**Y2-2380-60**	**. W.C.L. "RICON" - PUMP INSTALLATION MODEL "F9A"**					
7	**Y2-2380-65**	**. . W.C.L. "RICON" - PUMP ASSY**					
8	862206	. CONTROLER	1				
. NS	196844	. . SWITCH / M/ON-OFF-M/ON S P.D.T WHITE	1				
NS	864191	DVD "SAFETY RECALL "RICON" W.C.L.	1				
NS	864173	DECAL "FASTEN BELT" WCL	1				
NS	864194	DECAL "ATTACHEZ LA CEINTURE" WCL	1				

From 1-7681 To 4-8278		Date:07/2024	PAGE:Y2-2380-06
W.C.L. "RICON" MODEL "HC-L002"			

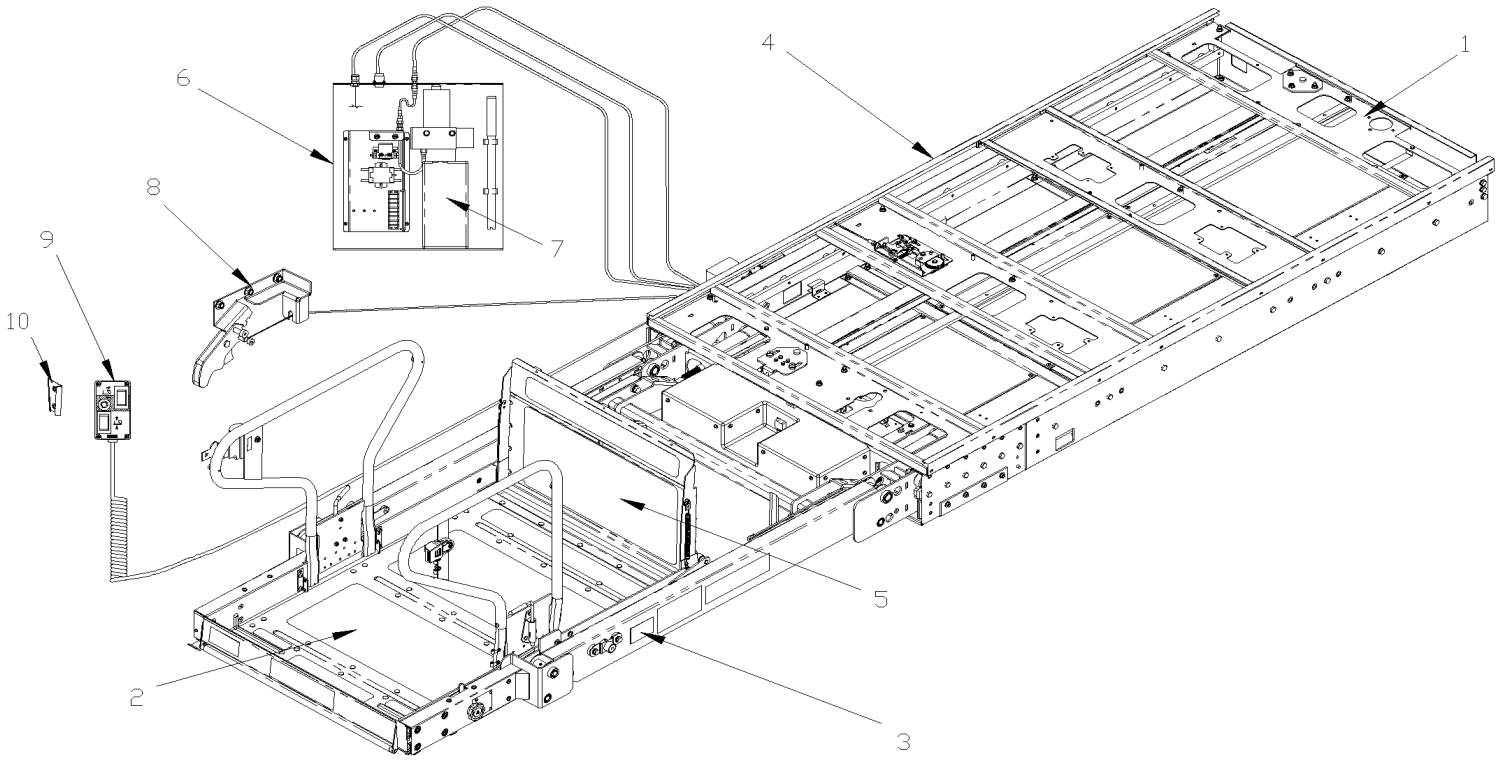

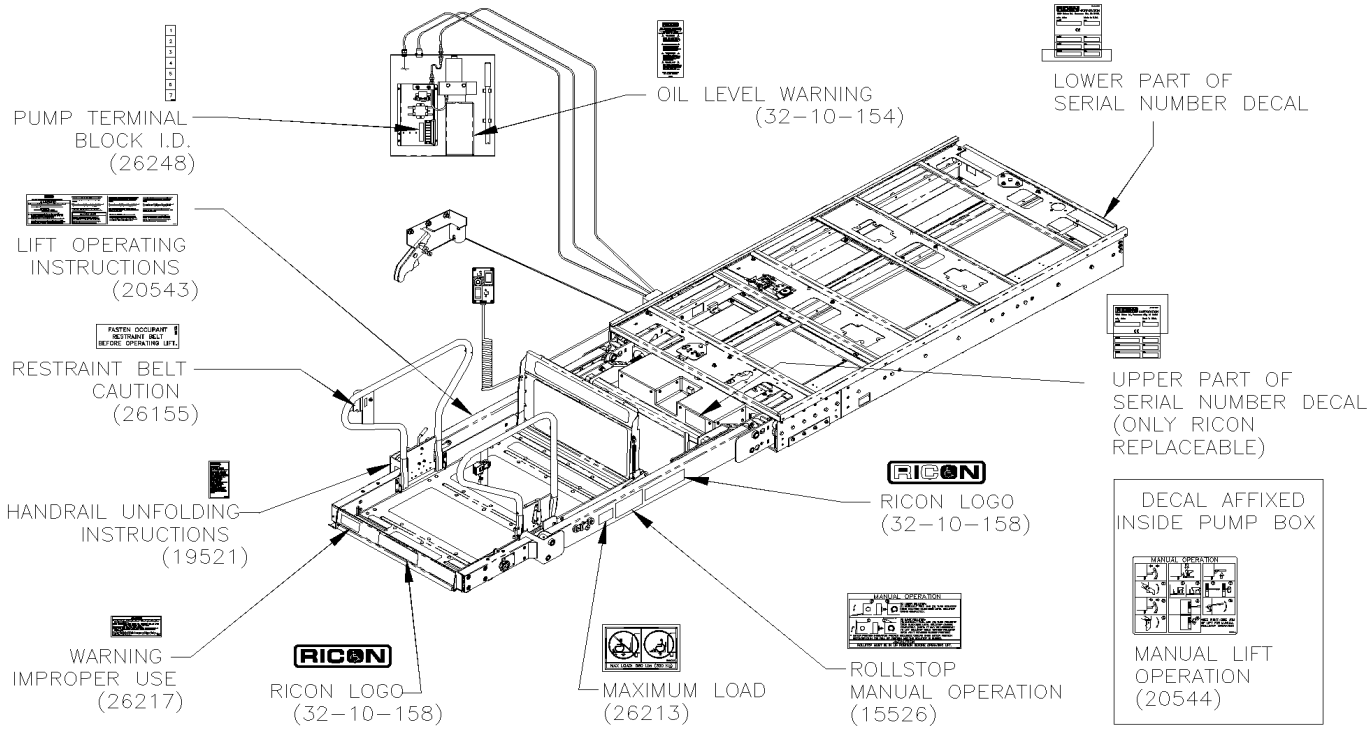

From 1-7681 To 4-8278		Date:07/2024	PAGE:Y2-2380-06

W.C.L. "RICON" MODEL "HC-L002"

Item#	Part	Description	XLII 45	XLII MTH40	XLII MTH45	XLII MTH45E	NOTES
	862026	W.C.L. "RICON" - HC-L002 To 4-8278	1				
1	**Y2-2380-11**	**. W.C.L. "RICON" - LIFT ENCLOSURE ASSY MODEL "HC-L002"**					
2	**Y2-2380-21**	**. W.C.L. "RICON" - PLATFORM ASSY MODEL "HC-L002"**					
3	**Y2-2380-31**	**. W.C.L. "RICON" - TRAVELING FRAME ASSY MODEL "HC-L002"**					
4	**Y2-2380-41**	**. W.C.L. "RICON" - CARRIAGE ASSY MODEL "HC-L002"**					
5	**Y2-2380-51**	**. W.C.L. "RICON" - BRIDGE PLATE ASSY 9" MODEL "HC-L002"**					
6	**Y2-2380-61**	**. W.C.L. "RICON" - PUMP INSTALLATION MODEL "HC-L002"**					
7	**Y2-2380-65**	**. . W.C.L. "RICON" - PUMP ASSY**					
8	**Y2-2380-70**	**. W.C.L. "RICON" - RELEASE HANDLE MODEL "HC-L002"**					
9	862206	. CONTROLER	1				
. NS	196844	. . SWITCH / M/ON-OFF-M/ON S P.D.T WHITE	1				
10	Call order desk	. MOUNTING BRACKET / CONTROLER	1				P
		P) CALL ORDER DESK FOR SPECIFIC APPLICATION (V.I.N.)					

From 4-8279 To 5-8605		Date:07/2024	PAGE:Y2-2380-07
W.C.L. "RICON" REMOVABLE MODEL "F9T"			

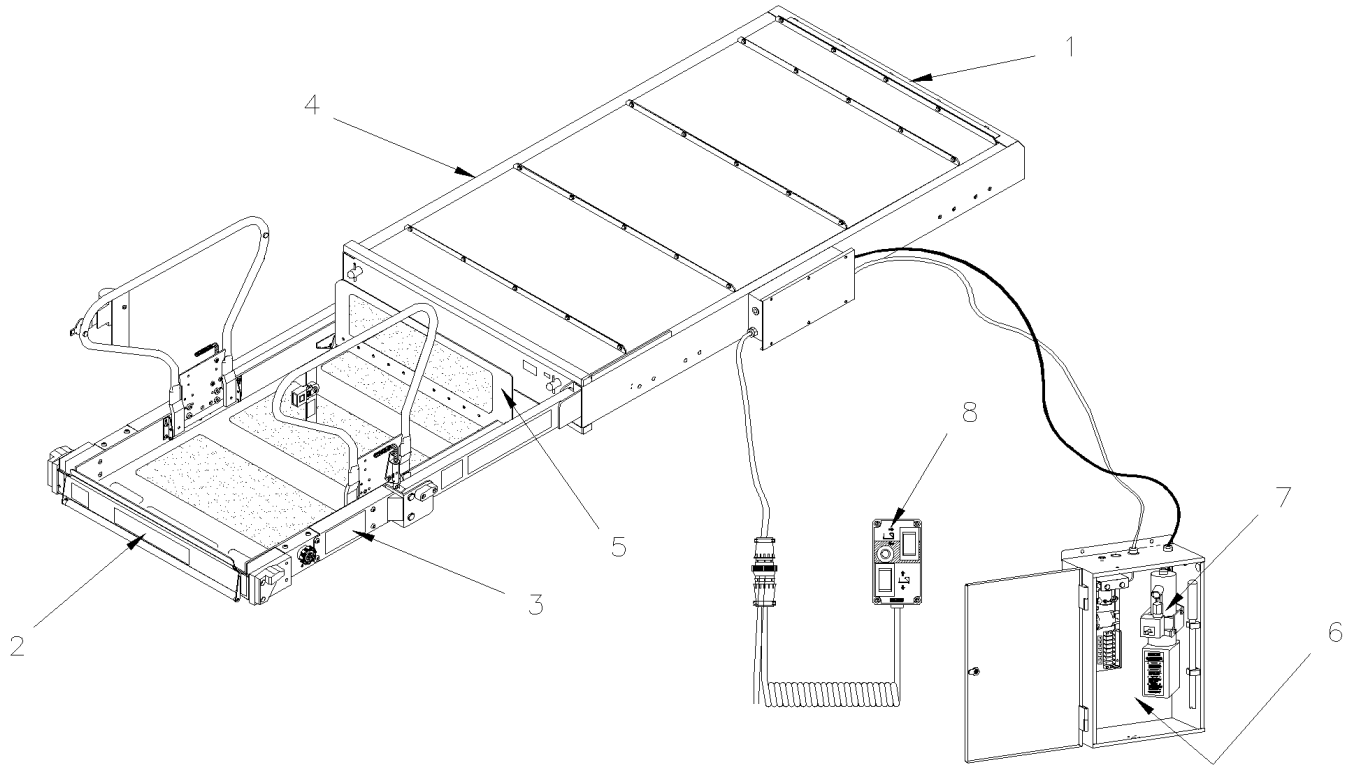

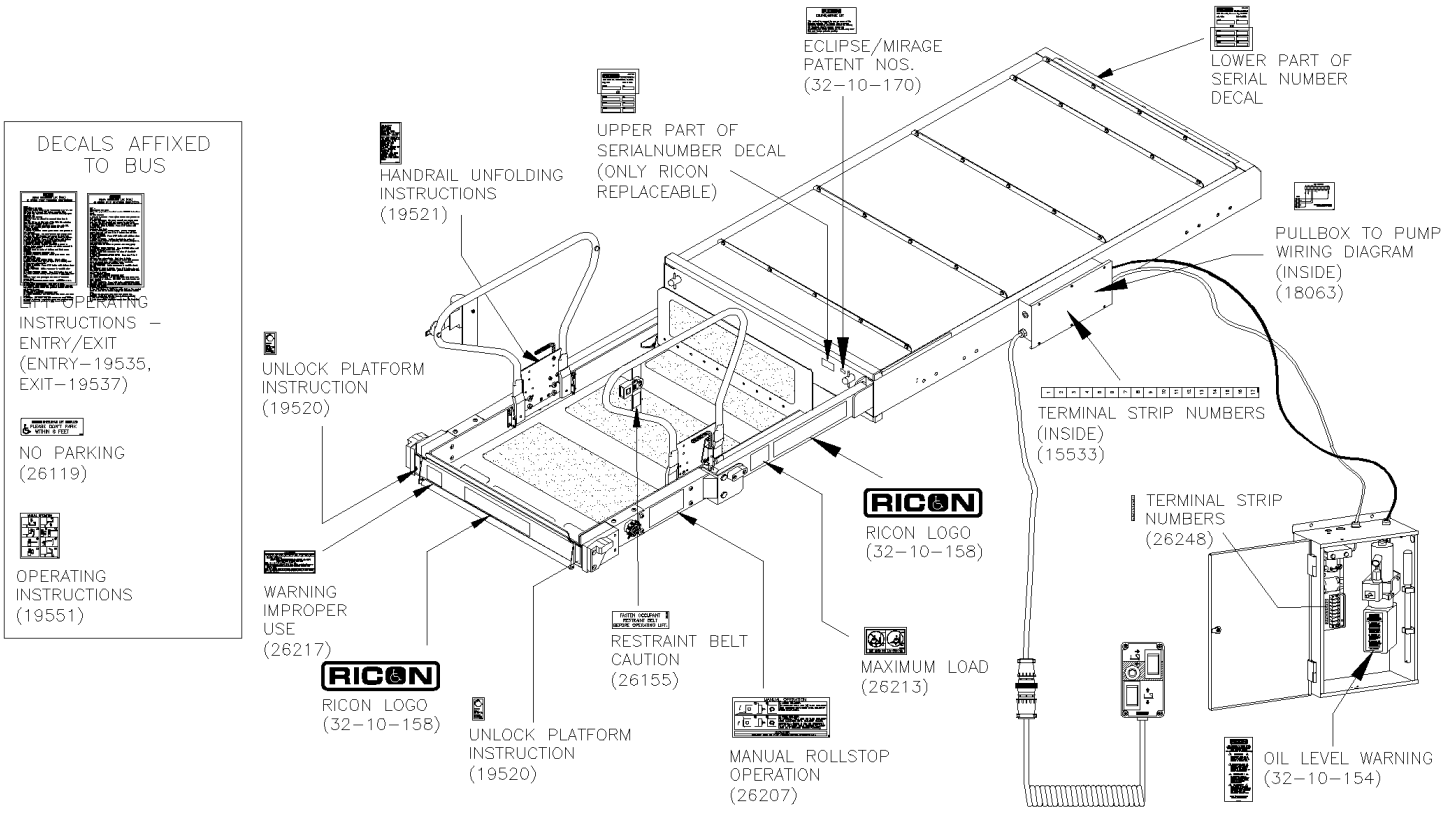

From 4-8279 To 5-8605		Date:07/2024	PAGE:Y2-2380-07

W.C.L. "RICON" REMOVABLE MODEL "F9T"

Item#	Part	Description	XLII 45	XLII MTH40	XLII MTH45	XLII MTH45E	NOTES
	862352	W.C.L. "RICON" - F9T-DE004	1				
1	**Y2-2380-12**	**. W.C.L. "RICON" - LIFT ENCLOSURE ASSY MODEL "F9T" & "F9TF"**					
2	**Y2-2380-22**	**. W.C.L. "RICON" - PLATFORM ASSY MODEL "F9T"**					
3	**Y2-2380-32**	**. W.C.L. "RICON" - TRAVELING FRAME ASSY MODEL "F9T" & "F9TF"**					
4	**Y2-2380-42**	**. W.C.L. "RICON" - CARRIAGE ASSY MODEL "F9T" & "F9TF"**					
5	**Y2-2380-52**	**. W.C.L. "RICON" - BRIDGE PLATE ASSY 9" MODEL "F9T" & "F9TF"**					
6	**Y2-2380-62**	**. W.C.L. "RICON" - PUMP INSTALLATION MODEL "F9T" & "F9TF"**					
7	**Y2-2380-65**	**. . W.C.L. "RICON" - PUMP ASSY**					
8	196149	PENDANT, W/COILED CORD	1				

From 5-8606 To 6-8906		Date:07/2024	PAGE:Y2-2380-08
W.C.L. "RICON" REMOVABLE MODEL "F9TF"			

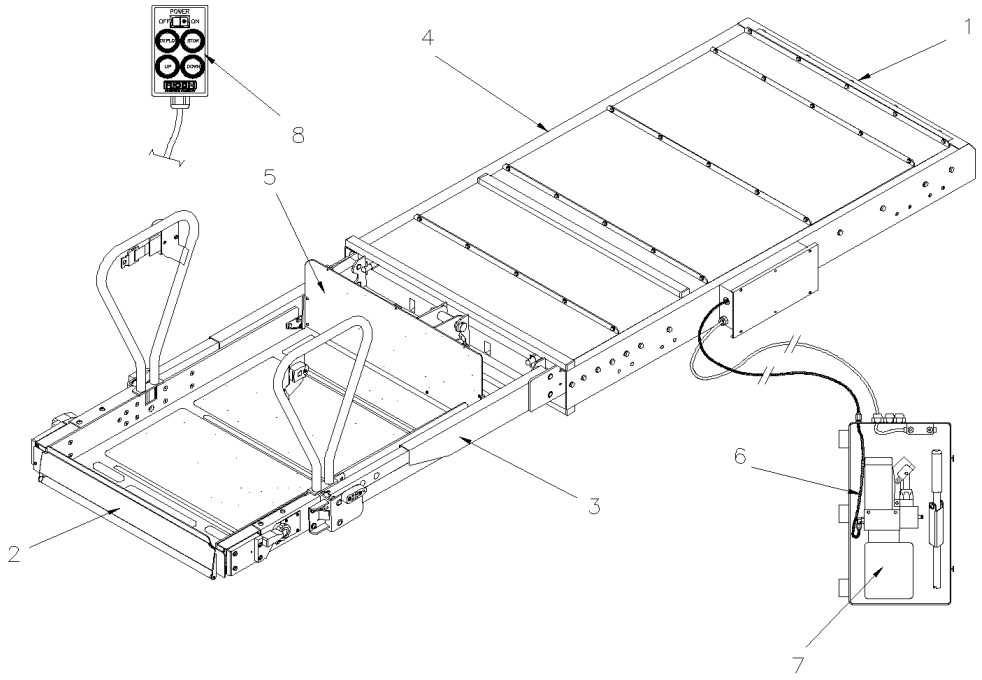

DECALS AFFIXED TO VEHICLE

LIFT OPERATING INSTRUCTIONS, ENTRY AND EXIT
ENTRY–32159, EXIT–32160

LIFT OPERATING INSTRUCTIONS, ENTRY AND EXIT, FOR LIFTS WITH A STOP AT INTERMEDIATE HEIGHT
ENTRY–32154, EXIT–32155

NO PARKING
(26119)

MANUAL OPERATING INSTRUCTIONS
(19551)

MANUAL OPERATING INSTRUCTIONS – ENGLISH–FRENCH
(29254)

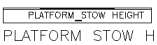

PLATFORM STOW HEIGHT
(19550)

TWS WARNING
(31997)

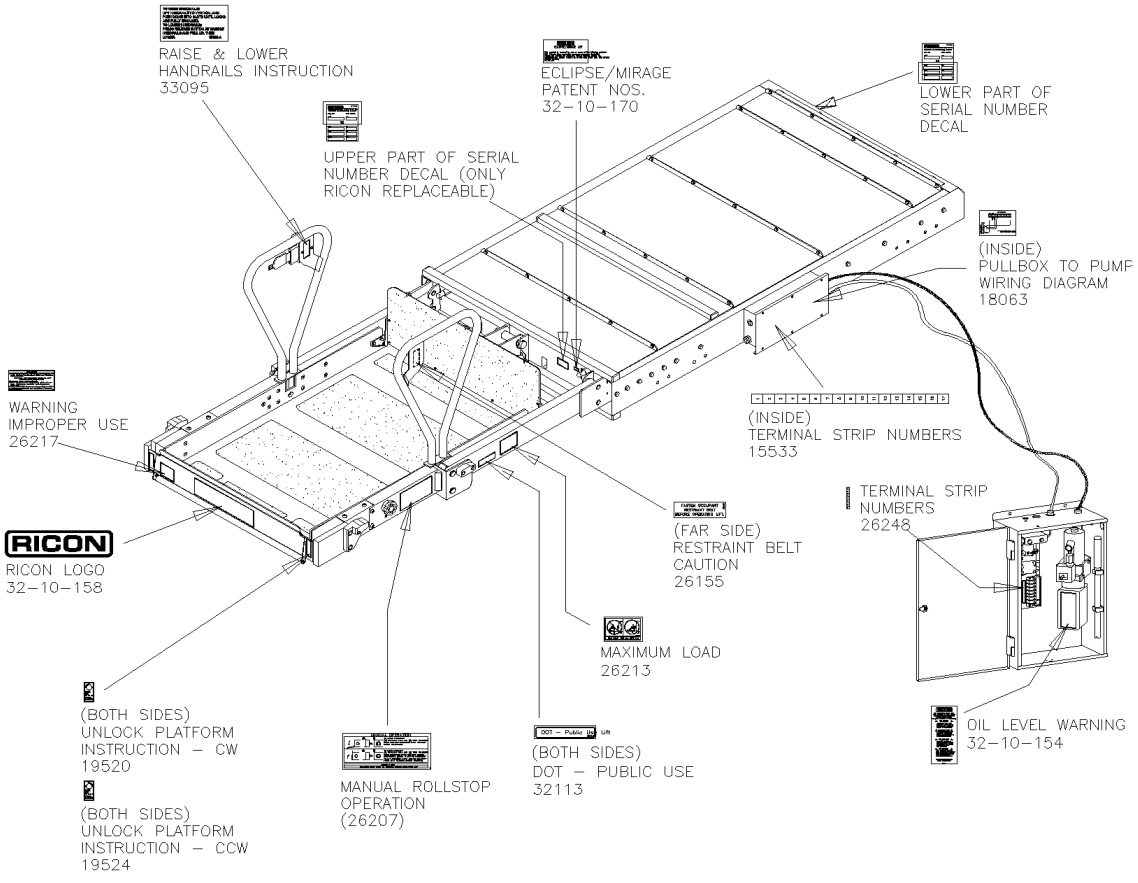

From 5-8606 To 6-8906		Date:07/2024	PAGE:Y2-2380-08

W.C.L. "RICON" REMOVABLE MODEL "F9TF"

Item#	Part	Description	XLII 45	XLII MTH40	XLII MTH45	XLII MTH45E	NOTES
	862662	W.C.L. "RICON" - F9TF-DE004	1				
1	**Y2-2380-12**	**. W.C.L. "RICON" - LIFT ENCLOSURE ASSY MODEL "F9T" & "F9TF"**					
2	**Y2-2380-23**	**. W.C.L. "RICON" - PLATFORM ASSY MODEL "F9TF"**					
3	**Y2-2380-32**	**. W.C.L. "RICON" - TRAVELING FRAME ASSY MODEL "F9T" & "F9TF"**					
4	**Y2-2380-42**	**. W.C.L. "RICON" - CARRIAGE ASSY MODEL "F9T" & "F9TF"**					
5	**Y2-2380-52**	**. W.C.L. "RICON" - BRIDGE PLATE ASSY 9" MODEL "F9T" & "F9TF"**					
6	**Y2-2380-62**	**. W.C.L. "RICON" - PUMP INSTALLATION MODEL "F9T" & "F9TF"**					
7	**Y2-2380-65**	**. . W.C.L. "RICON" - PUMP ASSY**					
8	862986	PENDANT, W/COILED CORD	1				
8	862987	HARNESS PENDANT EXTENSION, PULLBOX TO PENDANT	1				
8	862988	HARNESS, TWS INTERFACE, W/PCB	1				
NS	862989	CYCLE COUNTER	1				
NS	19514002	ROLLSTOP ADJ. TOOL	1				
NS	19514003	BRIDGEPLATE HGT GAUGE TOOL	1				

From Y-7046 To 1-7680		Date:07/2024	PAGE:Y2-2380-10
W.C.L. "RICON" - LIFT ENCLOSURE ASSY MODEL "F9A"			

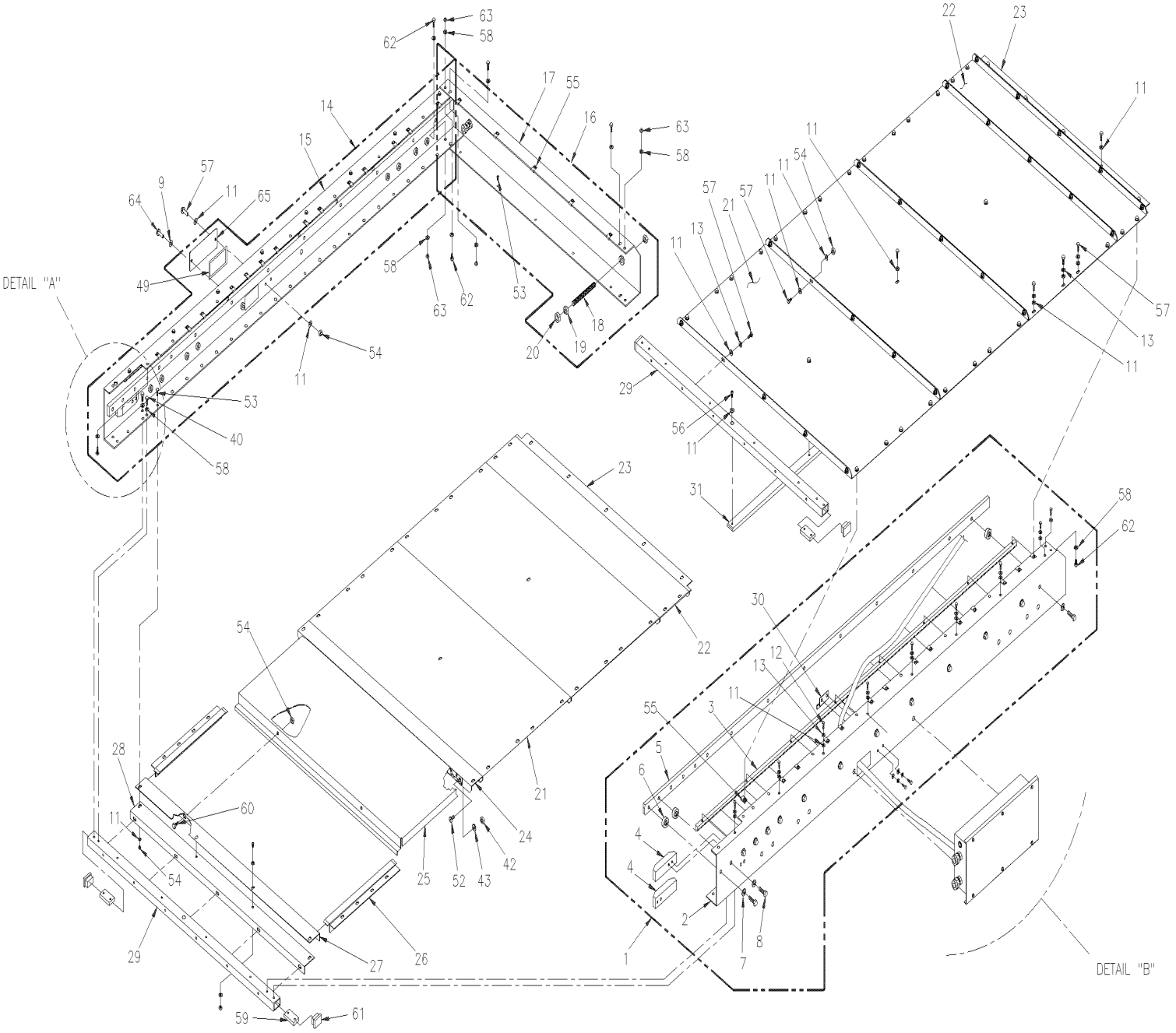

From Y-7046 To 1-7680		Date:07/2024	PAGE:Y2-2380-10
W.C.L. "RICON" - LIFT ENCLOSURE ASSY MODEL "F9A"			

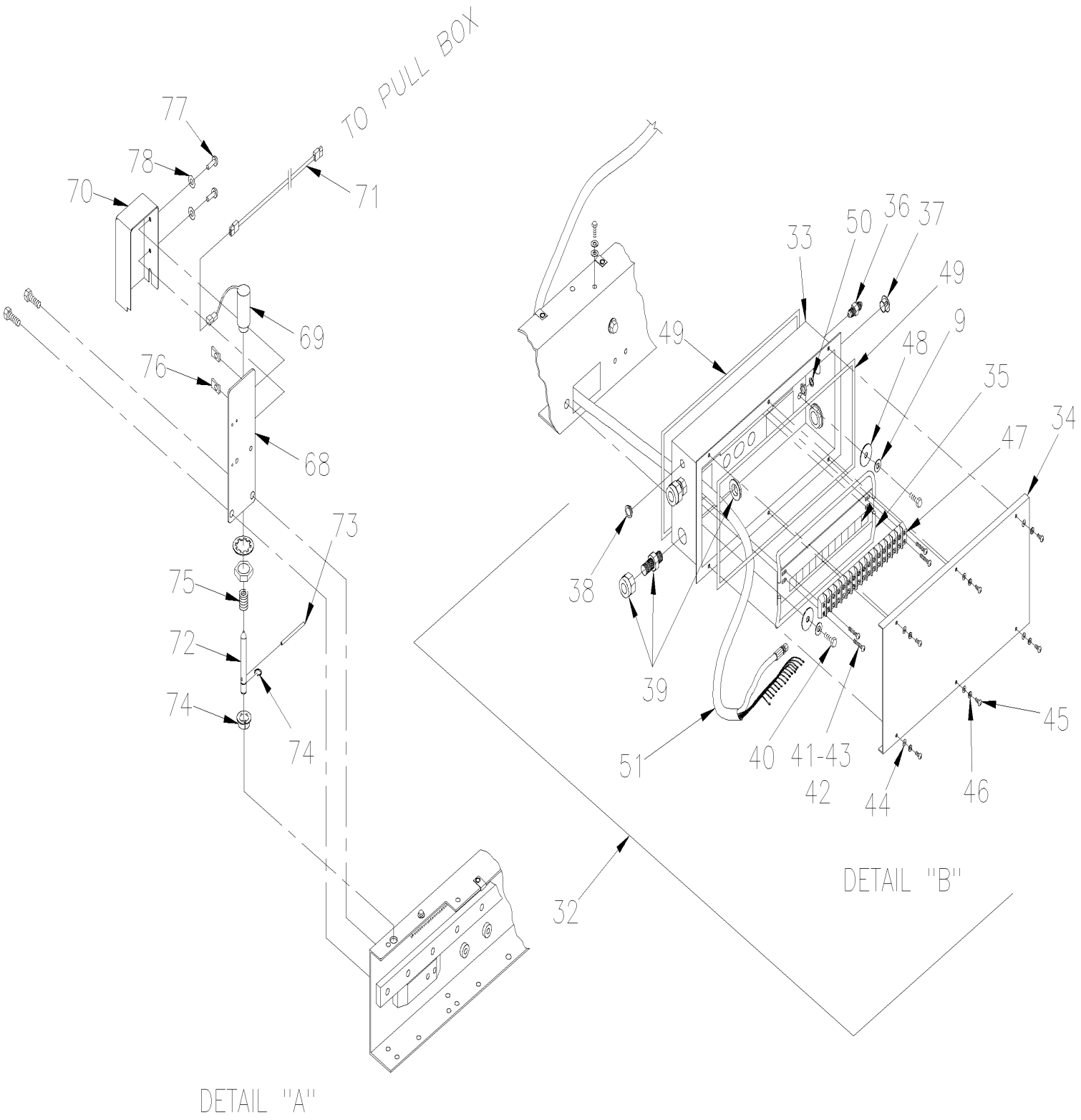

From Y-7046 To 1-7680		Date:07/2024	PAGE:Y2-2380-10

W.C.L. "RICON" - LIFT ENCLOSURE ASSY MODEL "F9A"

Item#	Part	Description	XLII 45	XLII MTH40	XLII MTH45	XLII MTH45E	NOTES
1	Call order desk	CHANNEL / MTG FRAME / 78.81 / RH MECH ASSY	1				P
2	Call order desk	CHANNEL / MTG FRAME / 78.81 / RH WELD ASSY	1				P
3	863006	GEAR RACK	2				
4	862109	STOP BLOCK	2				
4	862110	STOP BLOCK	2				
5	862993	RAIL, GUIDE, CARRIAGE	2				
6	Call order desk	SPACER .40THK	28				P
7	500270	WASHER FL .406x1.000x.063 SS	28				
8	Call order desk	SCREW CAP HEX 3/8-16x1.00 SS	1				P
9	500035	WASHER LO SPT .317x.586x.078 SS	14				
11	500411	WASHER FL .260x.697x.050 SS	AR				
12	5001315	SCREW CAP HEX 1/4-20x1 SS	16				
13	502570	WASHER LO SPT 6.1x11.8x1.6 SS	58				
14	Call order desk	CHANNEL / MTG FRAME / 78.81 / LH MECH ASSY	1				P
15	Call order desk	CHANNEL / MTG FRAME / 78.81 / LH WELD ASSY	1				P
16	Call order desk	CHANNEL / MTG FRAME / REAR ASSY	1				P
17	Call order desk	CHANNEL / MTG FRAME / REAR WELD ASSY	1				P
18	Call order desk	SOC SET 1/2-20x2.00 FLAT POINT / SS	2				P
19	Call order desk	NUT HEX THN 1/2-20	4				P
20	863008	BUMPER, CARRIAGE STOP	2				
21	Call order desk	COVER / 19.98"	5				P
22	Call order desk	COVER / 6.67"	2				P
23	Call order desk	BRACKET / COVER MOUNTING	2				P
24	Call order desk	BRACKET / ACCESS DOOR MOUNTING	1				P
25	Call order desk	PANEL / BOTTOM ACCESS COVER / TRIAN LIFT	1				P
26	Call order desk	BRACKET / ACCESS DOOR SIDE SHIELD / WELD ASSY	2				P
27	Call order desk	FLANGE / ACCESS DOOR ADJUSTEMENT	1				P
28	Call order desk	FLANGE / ACCESS DOOR MOUNTING	1				P
29	862998	TUBE, FORWARD CROSSMEMBER	2				
30	Call order desk	BRACKET / HOSE/CABLE CLAMP ASSEMBLY	1				P
31	Call order desk	RAIL / CARRIAGE GUIDE / SW	1				P
32	Call order desk	PULL BOX / MECHANICAL ASSY	1				P
33	Call order desk	BOX / PULL BOX	1				P
34	Call order desk	COVER / PULL BOX	1				P
35	Call order desk	TIE BAR / PULL BOX / WELD ASSY	1				P
36	863086	FITTING, BUN, 1/4J, 2.08L	1				
37	N8889990	HOLE PLUG HEYCO	1				
38	Call order desk	PLUG / 0.43 - 0.45 DIA / UP TO .06 THK / BLK	1				P
39	Call order desk	STRAIN RELIEF / STRE THRU LIQ TIGHT	3				P
40	Call order desk	SCREW CAP HEX 5/16-18x5/8 G5	10				P
41	Call order desk	SCREW CAP BUT #10-24x7/8 SS	4				P
42	5001180	NUT HEX NYRT #10-24 SS	9				

From Y-7046 To 1-7680		Date:07/2024	PAGE:Y2-2380-10

W.C.L. "RICON" - LIFT ENCLOSURE ASSY MODEL "F9A"

Item#	Part	Description	XLII 45	XLII MTH40	XLII MTH45	XLII MTH45E	NOTES
43	Call order desk	WASHER FL #10 SS	13				P
44	Call order desk	WASHER FL #8 SS	6				P
45	Call order desk	SCREW CAP BUT #8-32x1/2 SS	6				P
46	Call order desk	WASHER LO SPT #8 SS	6				P
47	Call order desk	TERMINAL STRIP / 15 THERM	1				P
48	Call order desk	WASHER LO SPT 7/16 SS	2				P
49	506465	TAPE RUB ADH1 CC NEO 1/8" x 1/4" x 60' / BLACK 1220	AR				
50	N8886025	WASHER LO EXT 7/16 SS	1				
51	Call order desk	HARNESS MAIN / WITH HYDRAULIC	1				P
52	Call order desk	SCREW CAP CK HEXS #10-24x1/2 SS	5				P
53	Call order desk	SCREW CRG 1/4-20x5/8 SS	39				P
54	5001251	NUT HEX NYRT 1/4-20 SS	56				
55	500837	NUT SPR U 1/4-20 .064-.125	36				
56	Call order desk	SCREW CAP BUT HEXS 1/4-20x5/8 SS	3				P
57	N8886004	SCREW CAP HEX 1/4-20x5/8 SS	AR				
58	Call order desk	WASHER FL 5/16 SS	14				P
59	Call order desk	PLATE FORWARD CROSS MEMBER MOUNTING	4				P
60	Call order desk	SCREW CAP HEX 1/4-20x3/4 SS	2				P
61	868230	CAP RECTANGLE / BLACK	4				
62	Call order desk	SCREW CAP HEX 5/16-18x3/4 SS	4				P
63	500685	NUT HEX NYRT 5/16-18 SS	4				
64	Call order desk	SCREW CAP HEX 5/16-18x1/2 SS	1				P
65	Call order desk	PLATE / PLUG / ENCLOSURE	1				P
68	Call order desk	BRACKET-WASSY / STOW LOCK F9A	1				P
69	862111	SOLENOID / 24V STO LOC.3 + 1lb @ 1"	1				
70	Call order desk	COVER STOW LOCK MIRAGE	1				P
71	862112	HARNESS - L PULL BOX TO STOW LOCK	1				
72	Call order desk	PIN-STOW LOCK / MIRAGE	1				P
73	Call order desk	PIN SS 5/32x2.50	1				P
74	Call order desk	BUSHING-FLANGE .50x.25	1				P
		P) CALL ORDER DESK FOR SPECIFIC APPLICATION (V.I.N.)					

From 1-7681 To 4-8278		Date:07/2024	PAGE:Y2-2380-11
W.C.L. "RICON" - LIFT ENCLOSURE ASSY MODEL "HC-L002"			

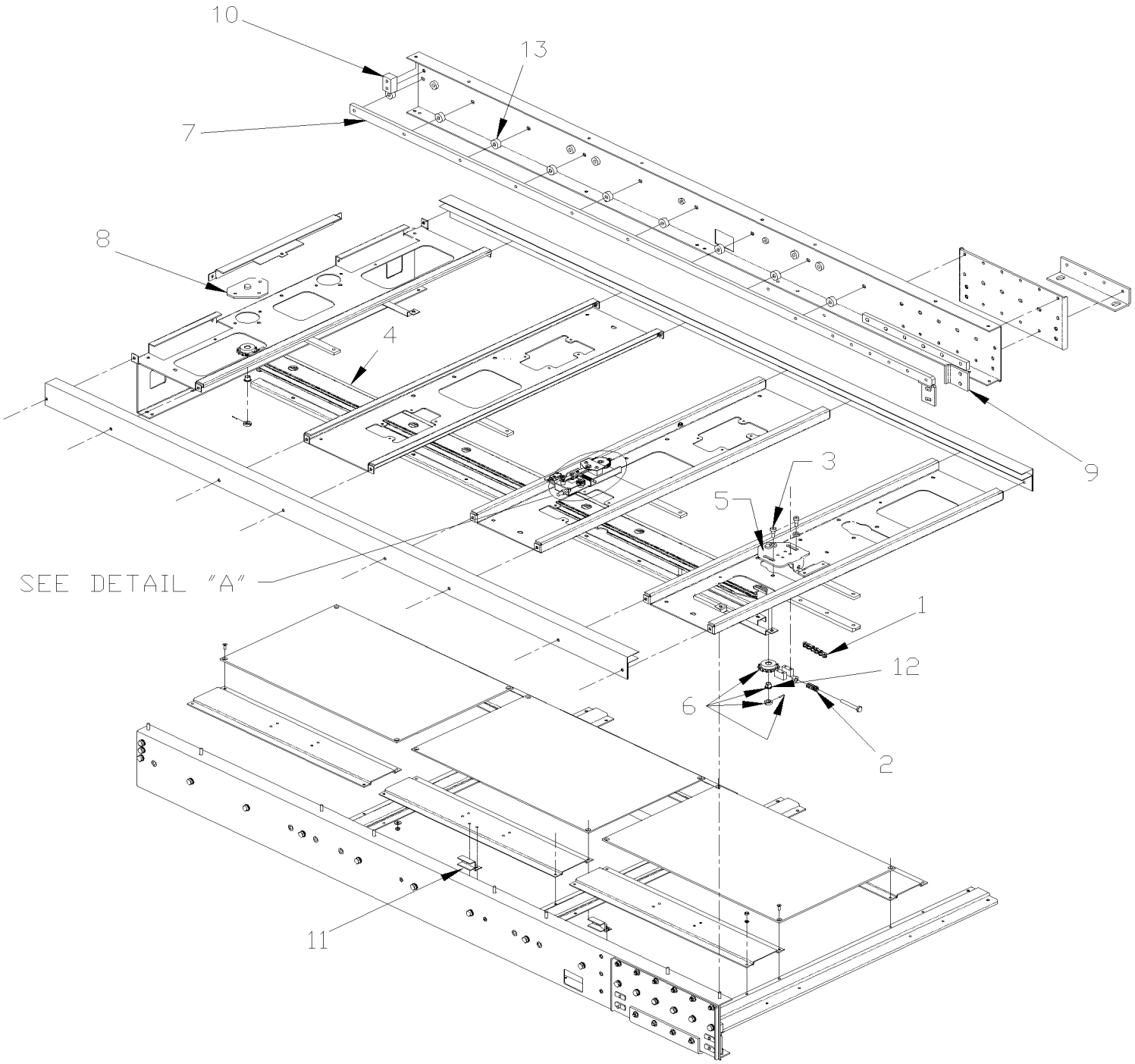

From 1-7681 To 4-8278		Date:07/2024	PAGE:Y2-2380-11
W.C.L. "RICON" - LIFT ENCLOSURE ASSY MODEL "HC-L002"			

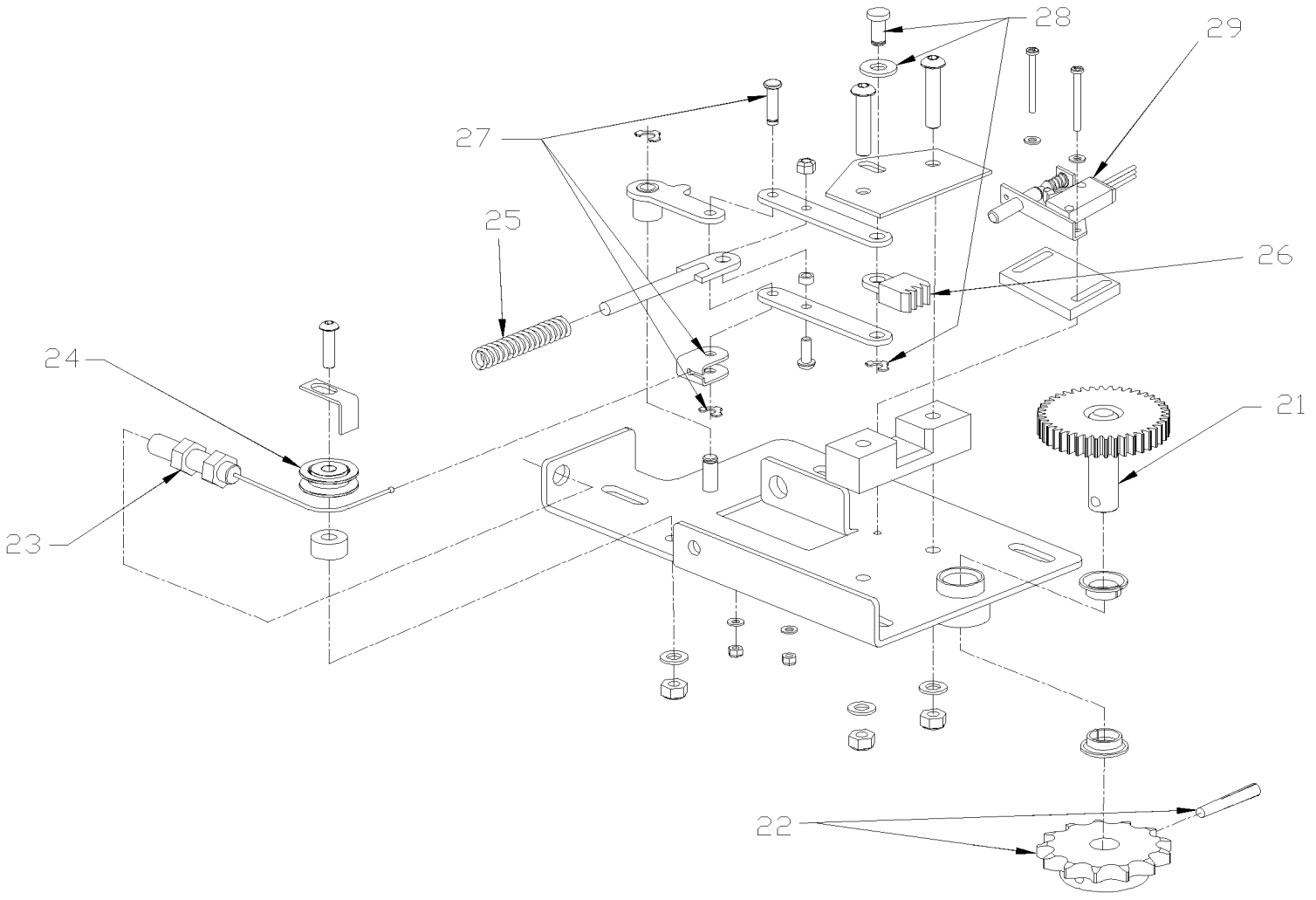

From 1-7681 To 4-8278		Date:07/2024	PAGE:Y2-2380-11

W.C.L. "RICON" - LIFT ENCLOSURE ASSY MODEL "HC-L002"

Item#	Part	Description	XLII 45	XLII MTH40	XLII MTH45	XLII MTH45E	NOTES
1	Call order desk	CHAIN, CARRIAGE DRIVE	1				P
2	Call order desk	SPRING, COMP, .60ODX1.5”	1				P
3	Call order desk	SCREW SHR HEXS 10x12{M8-1.25	4				P
4	Call order desk	CHAIN TRACK	1				P
5	Call order desk	PLATE / SPROCKET SUPPORT / FRONT	1				P
6	Call order desk	KIT, SPROCKET, #40, 14T, W/HDWR	2				P
7	Call order desk	GUIDE, RAIL	2				P
8	Call order desk	PLATE / SPROCKET SUPPORT / REAR	1				P
9	Call order desk	CARRIAGE STOP / FRONT	2				P
10	Call order desk	CARRIAGE STOP / REAR	2				P
11	Call order desk	CLAMP, HARNESS	2				P
12	Call order desk	BUSHING .50IDx.50W / (BAG OF TEN)	2				P
13	Call order desk	SPACER / GUIDE RAIL / (BAG OF TEN)	18				P
21	Call order desk	GEAR, CARRIAGE LOCK, W/SHAFT	1				P
22	Call order desk	KIT, SPROCKET, 13T, #40, W/PIN	1				P
23	Call order desk	CABLE ASSEMBLY, CARRIAGE LOCK, HC-L002	1				P
24	Call order desk	PULLEY, W-BEARING	1				P
25	Call order desk	SPRING, COMP, .41ODX2.3L	1				P
27	Call order desk	KIT, CLEVIS, W/PIN & CLIP	1				P
28	Call order desk	KIT, PIN, W/CLIP	1				P
29	864026	PLUNGER SWITCH / SEALED / TAPPED 6-32	1				
		P) CALL ORDER DESK FOR SPECIFIC APPLICATION (V.I.N.)					

From 4-8279 To 6-8906		Date:07/2024	PAGE:Y2-2380-12
W.C.L. "RICON" - LIFT ENCLOSURE ASSY MODEL "F9T" & "F9TF"			

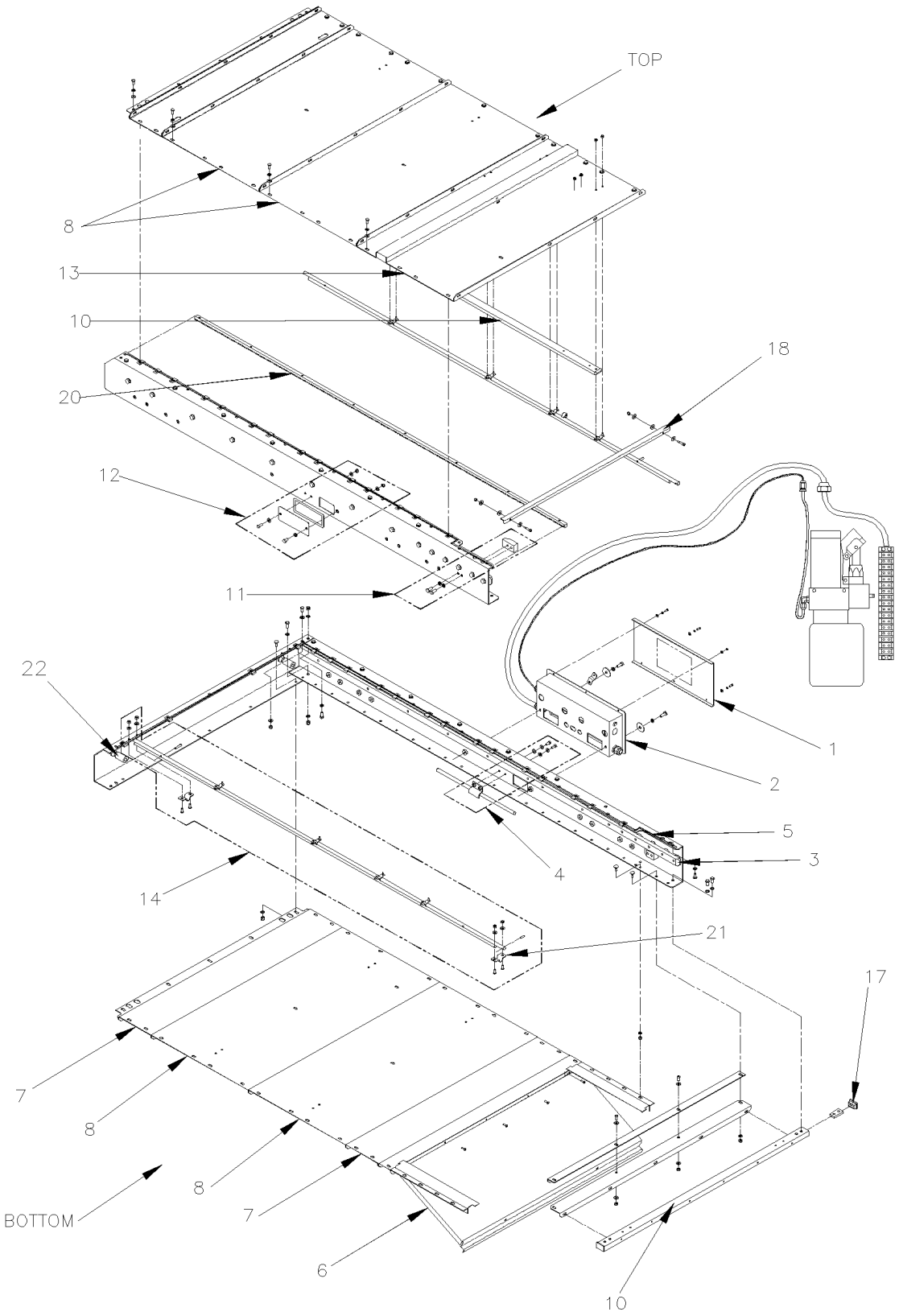

From 4-8279 To 6-8906		Date:07/2024	PAGE:Y2-2380-12

W.C.L. "RICON" - LIFT ENCLOSURE ASSY MODEL "F9T" & "F9TF"

Item#	Part	Description	XLII 45	XLII MTH40	XLII MTH45	XLII MTH45E	NOTES
1	862991	KIT, PULLBOX COVER	1				
2	Call order desk	PULLBOX ASSY To 5-8605	1				P
2	862992	PULLBOX ASSY From 5-8606	1				
3	862999	RAIL, CARRIAGE GUIDE	2				
4	862994	KIT, HOSE CLAMP	1				
5	19509886	WEATHERSTRIP	1				
6	862995	KIT, SERVICE ACCESS PANEL	1				
7	19509867	KIT, ENCLOSURE COVER, 6.6” W/HDWR	2				
8	862997	KIT, ENCLOSURE COVER, 19.98”	4				
10	862998	TUBE, FORWARD CROSSMEMBER	1				
11	863000	KIT, STOP BLOCK	2				
12	863001	KIT, BLOCK-OFF PLATE	1				
13	863002	KIT, ENCLOSURE COVER, LINKAGE	1				
14	863003	KIT, PLATFORM RELEASE SHAFT / LH	2				
17	863004	PLUG, RECTANGULAR, 1.0 X 1.5, NYLON, BLACK	4				
18	868231	TIE BAR, PLATFORM RELEASE SHAFTS	1				
20	863006	GEAR RACK	2				
21	863007	BRACKET, PLATFORM RELEASE SHAFT	4				
22	863008	BUMPER, CARRIAGE STOP	2				
		P) CALL ORDER DESK FOR SPECIFIC APPLICATION (V.I.N.)					

From Y-7046 To 1-7680		Date:07/2024	PAGE:Y2-2380-20
W.C.L. "RICON" - PLATFORM ASSY MODEL "F9A"			

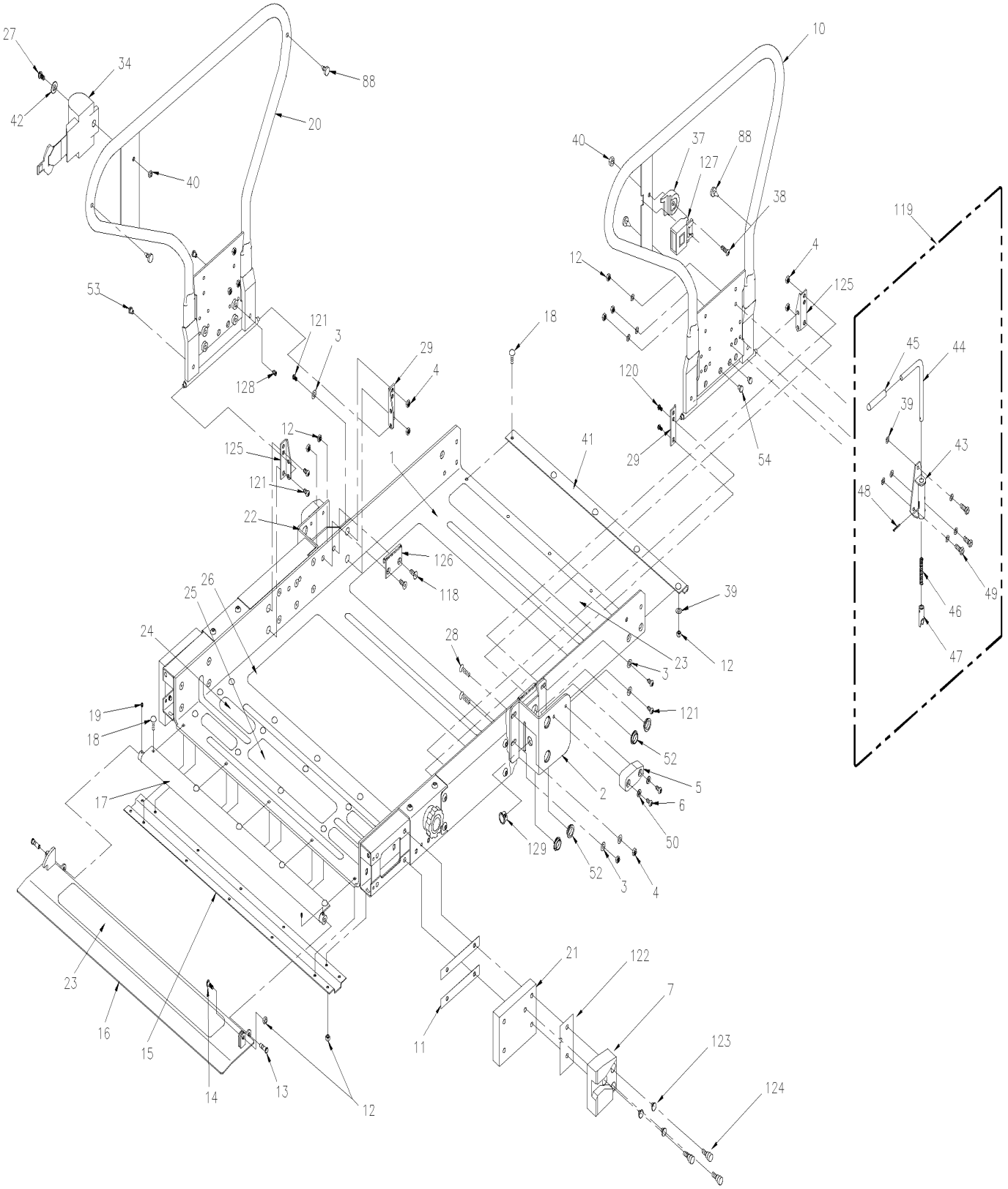

From Y-7046 To 1-7680		Date:07/2024	PAGE:Y2-2380-20
W.C.L. "RICON" - PLATFORM ASSY MODEL "F9A"			

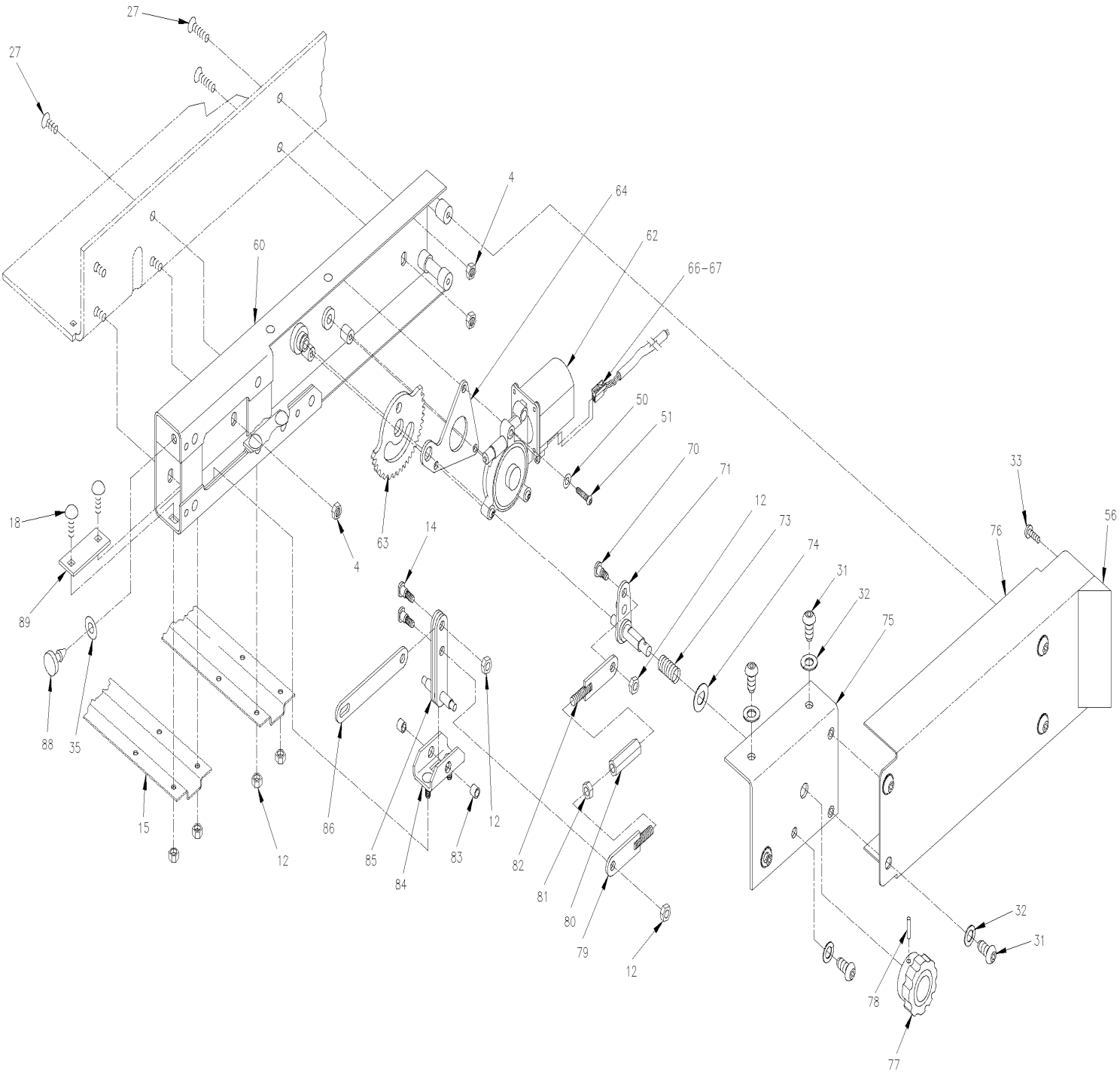

From Y-7046 To 1-7680		Date:07/2024	PAGE:Y2-2380-20
W.C.L. "RICON" - PLATFORM ASSY MODEL "F9A"			

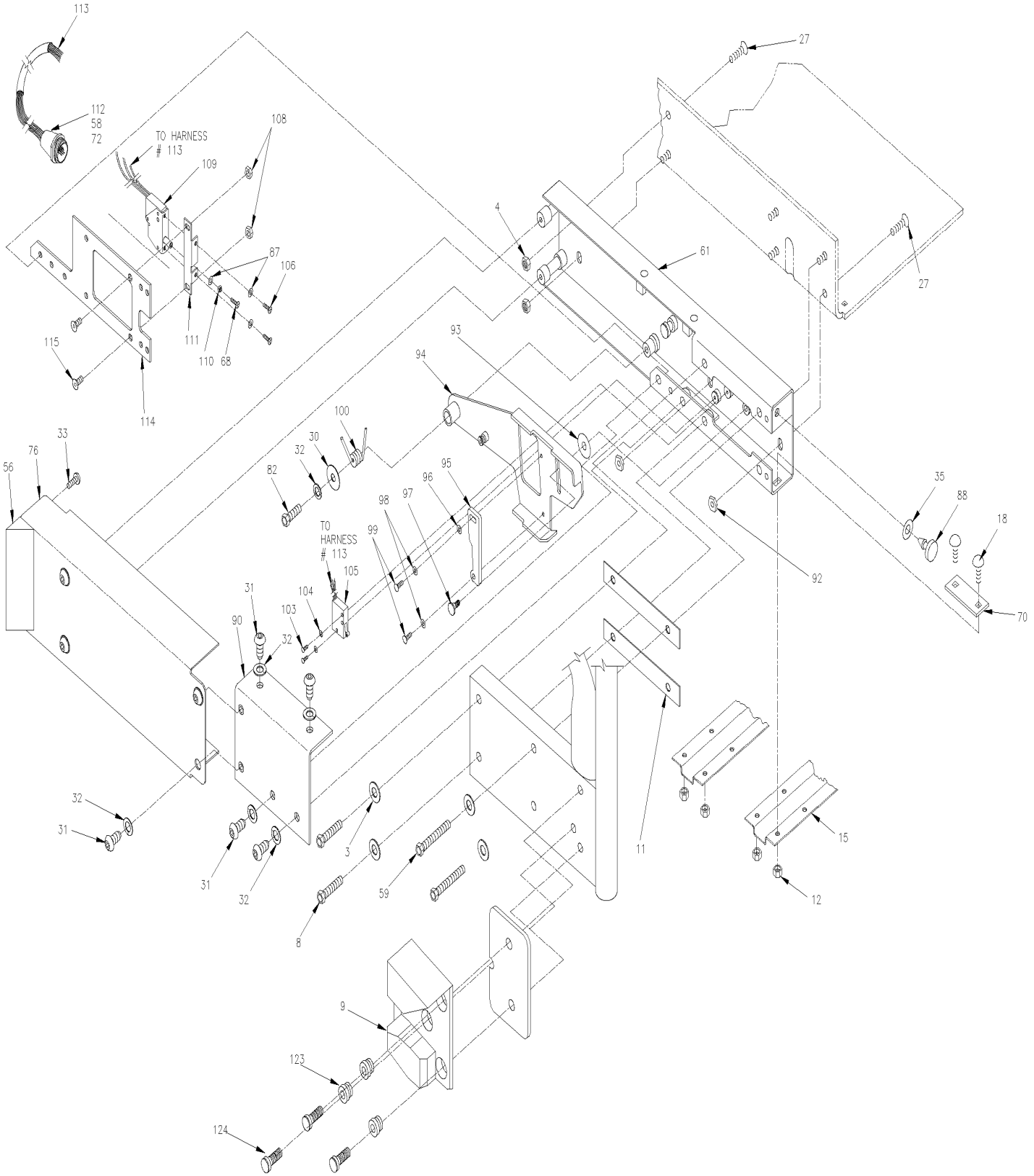

From Y-7046 To 1-7680		Date:07/2024	PAGE:Y2-2380-20

W.C.L. "RICON" - PLATFORM ASSY MODEL "F9A"

Item#	Part	Description	XLII 45	XLII MTH40	XLII MTH45	XLII MTH45E	NOTES
1	Call order desk	PLATFORM 32.25x47.00	1				P
2	866132	BRACKET-WASSY / PLATFORM PIVOT RH	1				
3	Call order desk	WASHER FL .32x.75x.08 SS	20				P
4	500685	NUT HEX NYRT 5/16-18 SS	AR				
5	862113	STOW GUIDE	2				
6	Call order desk	SCREW CAP BUT HEXS 1/4-20x3/4 SS	4				P
7	862114	BLOCK / PLAFORM GUIDE / RH	1				
8	Call order desk	SCREW CAP HEX 5/16-18x1 1/2 SS	4				P
9	862115	BLOCK / PLAFORM GUIDE / LH	1				
10	Call order desk	HANDRAIL WELD ASSEMBLY / FOLDING / RH	1				P
10	Call order desk	HANDRAIL WELD ASSEMBLY / FOLDING / RH	1				P
11	Call order desk	SHIM HANDRAIL .50THK	4				P
12	500771	NUT HEX 1/4-20 SS	47				
13	Call order desk	PIN-CLEVIS SS 5/16x1.00	2				P
14	N8886020	SCREW SHR .250x.313	3				
15	Call order desk	STIFFENER / RIB / PRS / SW	2				P
16	Call order desk	ROLLSTOP WELD ASSY / PRS / SW	1				P
17	863649	STIFFENER, TUBE, PRS. PIVOT, WELD ASSY., SW	1				
18	Call order desk	SCREW CRG 1/4-20x3/4 SS	31				P
19	Call order desk	SCREW SET HEXS SS 1/4-20x1/4 1/4-20x1/4 SS	2				P
20	Call order desk	HANDRAIL WELD ASSEMBLY / FOLDING / LH	1				P
21	Call order desk	COVER-WASSY / RS	2				P
21	Call order desk	COVER-WASSY / RS	2				P
22	866133	BRACKET-WASSY / PLATFORM PIVOT LH	1				
23	863621	SAFETY TREAD / 25.50x3.0 / SAFETY YELLOW	2				
24	863017	SAFETY TREAD / 5.5x1.5 / SAFETY YELLOW	4				
25	863016	SAFETY TREAD / 12.75x3.0 / SAFETY YELLOW	1				
26	863620	SAFETY TREAD / 25.50x12 / OCEAN GREY	2				
27	Call order desk	SCREW CAP CK HEXS 5/16-18x3/4 SS	9				P
28	Call order desk	SCREW CAP CK HEXS 5/16-18x1.00 SS	8				P
29	Call order desk	BRACKET-HANDRAIL PIVOT RH	2				P
30	Call order desk	WASHER LO SPT 7/16 SS	1				P
31	Call order desk	SCREW CAP BUT HEXS 5/16-18x1/2 SS	16				P
32	Call order desk	WASHER LO SPT 5/16 SS	17				P
33	Call order desk	SCREW MA PH #8-32x1/16 SS	4				P
34	862116	RETRACTOR-RESTRAINT BELT	1				
35	500975	WASHER FL .378x.620x.094 NYL	2				
37	860137	BLOCK-BUCKLE MOUNT	1				
38	Call order desk	SCREW CAP BUT HEXS 5/16-18x1 3/8 SS	1				P
39	N8885992	WASHER FL .250 SS	23				
40	Call order desk	NUT HEX CAP 5/16-18 SS	2				P
41	Call order desk	STIFFENER / PLATFORM REAR / SW-T	1				P

From Y-7046 To 1-7680		Date:07/2024	PAGE:Y2-2380-20

W.C.L. "RICON" - PLATFORM ASSY MODEL "F9A"

Item#	Part	Description	XLII 45	XLII MTH40	XLII MTH45	XLII MTH45E	NOTES
42	Call order desk	WASHER COUNTER SINK	1				P
43	Call order desk	BRACKET-WASSY / LATCH	2				P
45	Call order desk	CAP-VINYL YLW .375-2.5 BLK LETTER.	2				P
46	N.S.S.	SPRING 2.5X.50X.52	2				1
47	864174	KIT LATCH ASSY	2				
48	Call order desk	ROLL PIN SS 1/8x1.00	2				P
49	Call order desk	SCREW CAP HEX 1/4-20x3/4 SS	6				P
50	502570	WASHER LO SPT 6.1x11.8x1.6 SS	10				
51	Call order desk	SCREW CAP BUT HEXS 1/4-20x.1 1/8 SS	2				P
52	863018	BEARING, FLANGED, 3/4I.D. X 1/4W	8				
53	195003	BUMPER-RUBBER .50X.31X.31	2				
54	Call order desk	BUMPER-RUBBER	3				P
56	Call order desk	BLOCK-PRS COVER	2				P
58	Call order desk	PIN MALE TAPE 66098-7 / (BAG OF TEN)	6				P
59	Call order desk	SCREW CAP HEX 5/16-18x2.00 SS	4				P
60	Call order desk	CHANNEL-WASSY / HOUSING / PRS / RH	1				P
60	Call order desk	CHANNEL-WASSY / HOUSING / SHORT PRS / RH	1				P
61	Call order desk	CHANNEL-WASSY / HOUSING / PRS / LH	1				P
61	Call order desk	CHANNEL-WASSY / HOUSING / SHORT PRS / RH	1				P
62	862117	KIT MOTOR, 24V W/HARDAWARE	1				
63	867628	GEAR PRS	1				
64	Call order desk	PLATE / KEEPER / PRS / GEAR	1				P
66	19518250	TERMINAL CONNECTOR-2 CIRCUIT / PACK-CON	1				
67	Call order desk	TERMINAL / PACK-CON SERIE 1 / HD FEM	1				P
68	Call order desk	SCREW MA PAN PH #6-32x5/8 SS	1				P
70	862208	BOLT-SHOULDER PRS	1				
71	862207	RELEASE TRIGGER / WELD ASSY / PRS	1				
72	Call order desk	STRAIN RELIEF	1				P
73	867693	SPRING / MANUAL RELEASE TRIGGER / PRS	1				
74	867694	WASHER 1/2 D/SHAPE 1.00X.30	1				
75	Call order desk	BRACKET / MANUAL RELEASE RH / WELD ASSY	1				P
76	Call order desk	COVER/ PRS SW	2				P
77	862210	KNOB KIT	1				
77	862118	. KNOB / PWR ROLL STOP / MIRAGE	1				
78	862119	. ROLL PIN SS 1/8x1 1/4	1				
79	863623	LINK / GEAR / WELD ASSEMBLY / RH	1				
80	863622	LINK / HEX ADJUSTABLE / PRS	1				
81	5001189	NUT HEX 5/16-18 SS	1				
82	863624	LINK / GEAR / WELD ASSEMBLY / LH THD	1				
83	Call order desk	BUSHING / PIVOT SHAFT / PRS	2				P
84	Call order desk	BRACKET / MTG / COMP LINK / WELD ASSY	1				P
85	Call order desk	LINK COMPENSATOR / WELD ASSY / PRS	1				P

From Y-7046 To 1-7680		Date:07/2024	PAGE:Y2-2380-20

W.C.L. "RICON" - PLATFORM ASSY MODEL "F9A"

Item#	Part	Description	XLII 45	XLII MTH40	XLII MTH45	XLII MTH45E	NOTES
86	Call order desk	LINK / ROLL STOP / PRS	1				P
87	Call order desk	WASHER LO SPT #6 SS	3				P
88	862120	BUMPER / RUBBER 1.000 O.D. x .13THK	2				
89	Call order desk	KEEPER / REINFORCEMENT	4				P
90	Call order desk	BRACKET / MANUAL RELEASE / LH / WELD ASSY	1				P
92	Call order desk	T-NUT SS 5/16-18	4				P
93	Call order desk	WASHER FL .315x1.156x.062 NYL	1				P
94	Call order desk	FOOT / PRS ACTUATOR / WELD ASSY	1				P
95	863041	PLATE, ACTUATOR, SWITCH	1				
96	Call order desk	WASHER FL #10 SS	1				P
97	Call order desk	SHOULDER SCREW / FLAP LATCH	1				P
98	N8885969	WASHER LO SPT .193 SS	2				
99	Call order desk	SCREW CAP BUT HEXS #10-24x3/8 SS	2				P
100	862121	SPRING / LH / ROLLSTOP ACTUATOR RETURN	1				
103	Call order desk	SCREW MA PAN PH #4-40x5/8	2				P
104	Call order desk	WASHER LO SPT #4	2				P
105	862122	LIMIT SWITCH / SEALED / PRS	1				
106	Call order desk	SCREW MA PAN PH #6-32x1/4 SS	2				P
108	5001180	NUT HEX NYRT #10-24 SS	2				
109	862123	PLUNGER SWITCH / SEALED / TAPPED 6-32	1				
109	864026	PLUNGER SWITCH / SEALED / TAPPED 6-32	1				
110	500553	NUT HEX #6-32 SS	1				
111	Call order desk	BRACKET / MOUNTING / LIMIT SWITCH / PRS	1				P
112	Call order desk	RECEPTACLE / 9 PIN WO/FLANGE	1				P
113	863512	HARNESS ASSY / ROLLSTOP SWITCH	1				A
113	863039	. HARNESS, W/TWO ROLLSTOP SWITCHES	1				
. NS	865043	. . ROLLSTOP PLUNGER	1				
114	Call order desk	PLATE / REINF LH / WELD ASSY / PRS SW-T	1				P
115	Call order desk	SCREW CAP CK HEXS #10-24x1/2 SS	2				P
118	N8885961	SCREW CAP FL HEXS 1/4-20x3/4 SS	4				
119	865085	MECH ASSY-LATCH	1				
120	Call order desk	SCREW CAP BUT HEXS 5/16-18x3/4 SS	2				P
121	Call order desk	SCREW CAP BUT HEXS 5/16-18x1.00 SS	6				P
124	Call order desk	SCREW CAP HEX 5/16-18x1/2 SS	6				P
125	Call order desk	BRACKET-HANDRAIL / LH	2				P
126	Call order desk	PLATE-HANDRAIL LOCK/ STRICKER	2				P
127	862124	BUCKLE-RESTRAINT BELT W/O SWITCH	1				
127	862216	BUCKLE-RESTRAINT BELT W/SWITCH	1				
128	Call order desk	SCREW SET HEXS SS 5/16-18x.50 5/16-18x1/2 SS	2				P
129	Call order desk	BUSHING .75x.25 THK SNAP IN	1				P

From Y-7046 To 1-7680		Date:07/2024	PAGE:Y2-2380-20

W.C.L. "RICON" - PLATFORM ASSY MODEL "F9A"

Item#	Part	Description	XLII 45	XLII MTH40	XLII MTH45	XLII MTH45E	NOTES
		A) INCLUDE ITEMS 58, 68, 72, 87, 105, 108, 109, 110, 111, 112 & 113					
		1) NOT SOLD SEPARATELY					
		P) CALL ORDER DESK FOR SPECIFIC APPLICATION (V.I.N.)					

From 1-7681 To 4-8278		Date:07/2024	PAGE:Y2-2380-21
W.C.L. "RICON" - PLATFORM ASSY MODEL "HC-L002"			

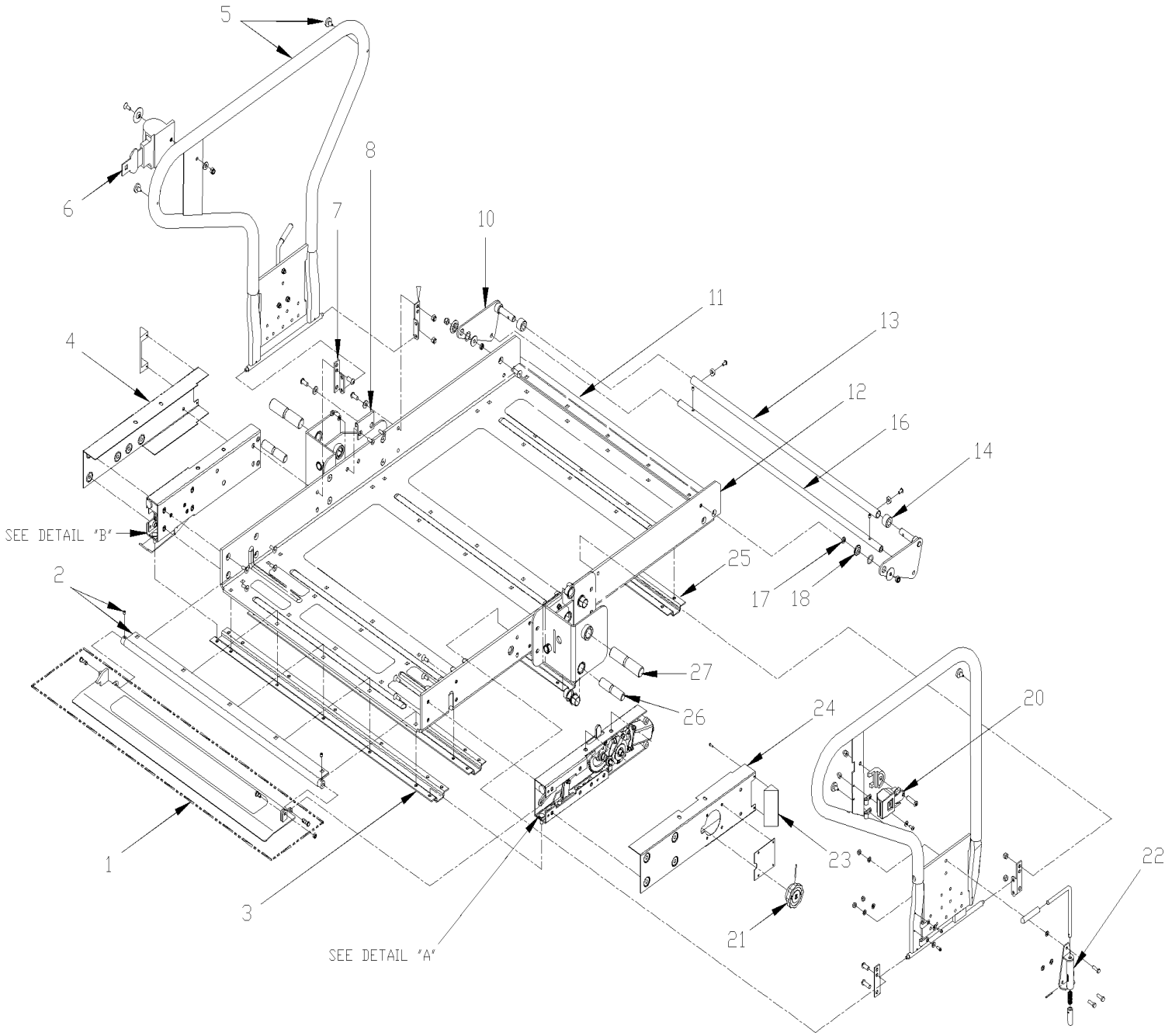

From 1-7681 To 4-8278		Date:07/2024	PAGE:Y2-2380-21
W.C.L. "RICON" - PLATFORM ASSY MODEL "HC-L002"			

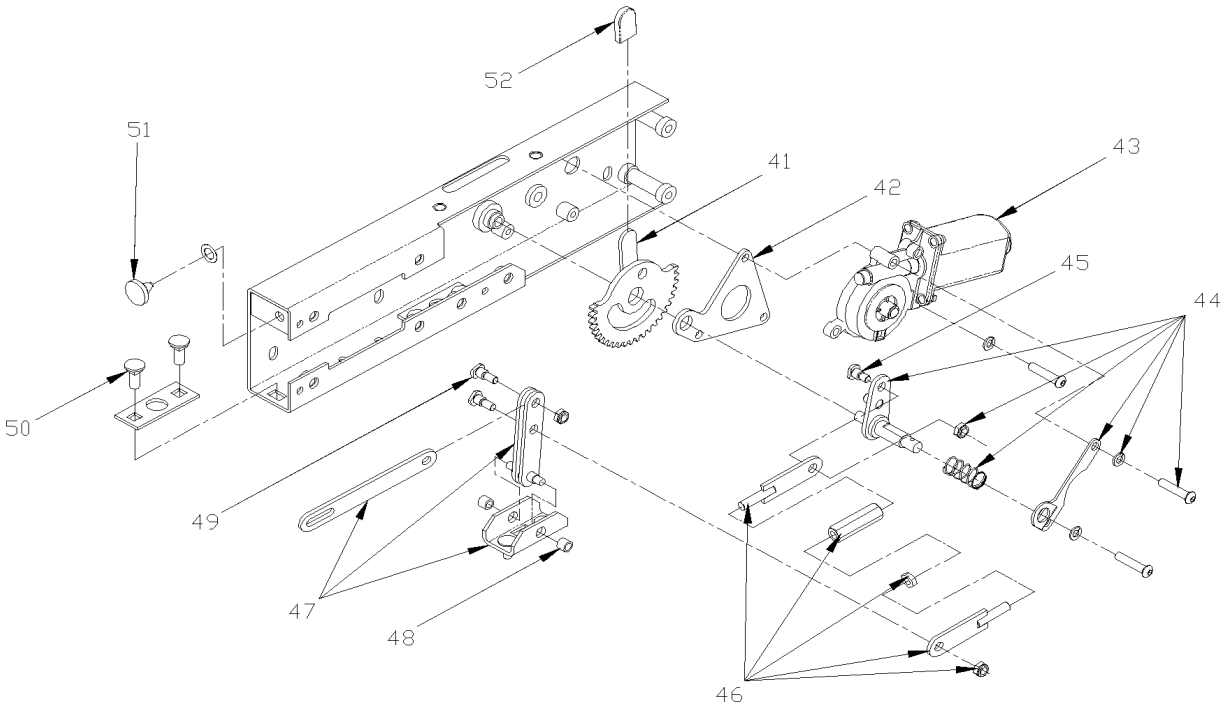

DETAIL "A"

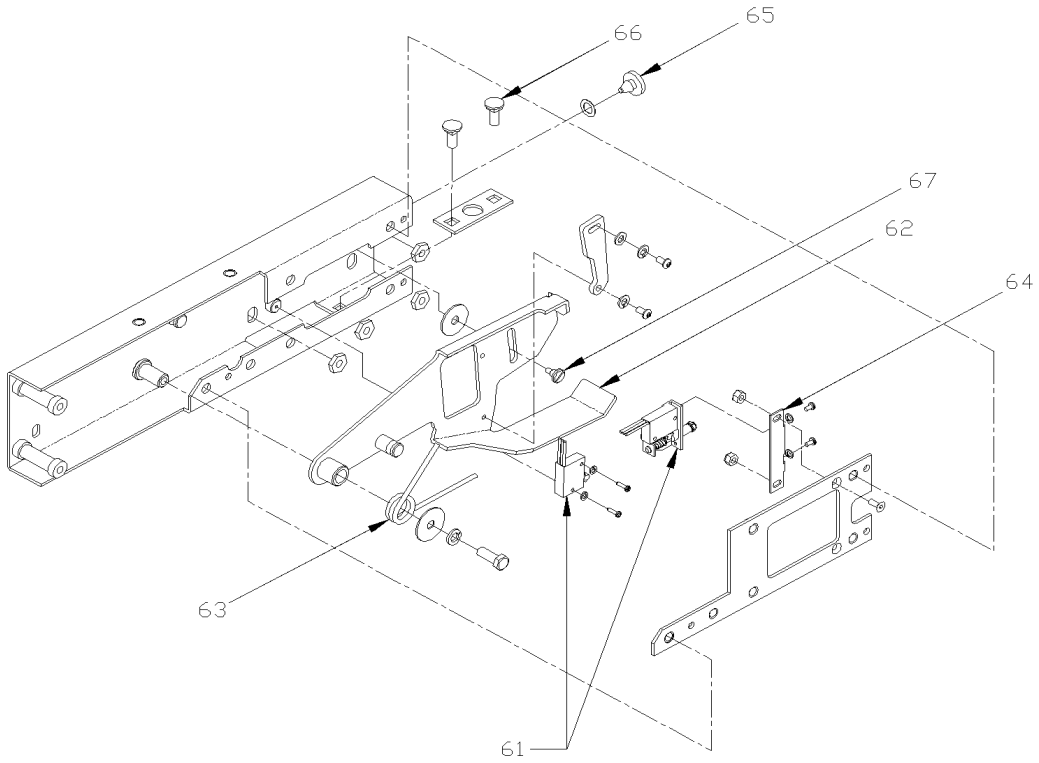

DETAIL "B"

From 1-7681 To 4-8278		Date:07/2024	PAGE:Y2-2380-21

W.C.L. "RICON" - PLATFORM ASSY MODEL "HC-L002"

Item#	Part	Description	XLII 45	XLII MTH40	XLII MTH45	XLII MTH45E	NOTES
1	Call order desk	KIT ROLLSTOP ASSY / W/SAFETREAD	1				P
2	Call order desk	KIT ROLLSTOP PIVOT / W/HARDWARE	1				P
3	Call order desk	STIFFENER / PLATFORM / FRONT	2				P
4	Call order desk	COVER / SIDE / ROLLSTOP LATCH	1				P
5	868136	KIT HANDRAIL	1				
6	862116	RETRACTOR-RESTRAINT BELT	1				
7	Call order desk	BRACKET HANDRAIL PIVOT	2				P
8	Call order desk	PLATE-HANDRAIL LOCK/ STRICKER	2				P
10	Call order desk	STIRRUP / BRIDGEPLATE	1				P
11	Call order desk	STIFFENER / PLATFORM / REAR	1				P
12	Call order desk	PLATFORM 32.25"x48", W/SAFETREADS	1				P
13	Call order desk	ROD / BRIDGEPLATE ACTUATOR	1				P
14	Call order desk	ROLLER / BRIDGEPLATE ACTUATOR	2				P
16	Call order desk	ROD / STIRRUP	1				P
17	Call order desk	BUSHING / BRIDGEPLATE	2				P
18	Call order desk	BUSHING / STIRRUP PIVOT	2				P
20	862216	BUCKLE-RESTRAINT BELT W/SWITCH	1				
21	862210	KNOB KIT	1				
22	864174	KIT LATCH ASSY	2				
23	Call order desk	DEFLECTOR / SIDE COVER	2				P
24	Call order desk	COVER / SIDE / ROLLSTOP ACTUATOR	1				P
25	Call order desk	STIFFENER / PLATFORM / MIDDLE	2				P
26	Call order desk	PIN PIVOT .75x3.25	1				P
27	Call order desk	PIN PIVOT .75x4.25	1				P
41	Call order desk	GEAR, W/INDICATOR, PRS	1				P
42	863038	COVER, ROLLSTOP, LH	1				
43	862117	KIT MOTOR, 24V W/HARDAWARE	1				
44	Call order desk	KIT MANUAL RELEASE LEVER	1				P
45	Call order desk	. SCREW SHR HEXS .310x.250{M6-1.0	1				P
46	Call order desk	KIT LINK ADJUSTABLE	1				P
47	Call order desk	KIT COMPENSATOR LINKAGE	1				P
48	Call order desk	. BUSHING / PIVOT SHAFT / PRS	2				P
49	Call order desk	. SCREW M6-1.0x11 SS	2				P
50	Call order desk	SCREW CRG M8-1.25x20	2				P
	Call order desk						P
52	Call order desk	CAP, RED VINYL, W/ARROW, BAG OF TEN	2				P
61	863039	HARNESS, W/TWO ROLLSTOP SWITCHES	1				
. NS	865043	. ROLLSTOP PLUNGER	1				
62	Call order desk	LATCH, ROLLSTOP	1				P
63	862121	SPRING / LH / ROLLSTOP ACTUATOR RETURN	1				
64	Call order desk	BRACKET / MOUNTING / LIMIT SWITCH / PRS	1				P
65	862120	BUMPER / RUBBER 1.000 O.D. x .13THK	1				

From 1-7681 To 4-8278		Date:07/2024	PAGE:Y2-2380-21

W.C.L. "RICON" - PLATFORM ASSY MODEL "HC-L002"

Item#	Part	Description	XLII 45	XLII MTH40	XLII MTH45	XLII MTH45E	NOTES
66	Call order desk	SCREW CRG M8-1.25x20	2				P
67	Call order desk	SCREW, SHOULDER, LATCH	1				P
		P) CALL ORDER DESK FOR SPECIFIC APPLICATION (V.I.N.)					

From 4-8279 To 5-8605		Date:07/2024	PAGE:Y2-2380-22
W.C.L. "RICON" - PLATFORM ASSY MODEL "F9T"			

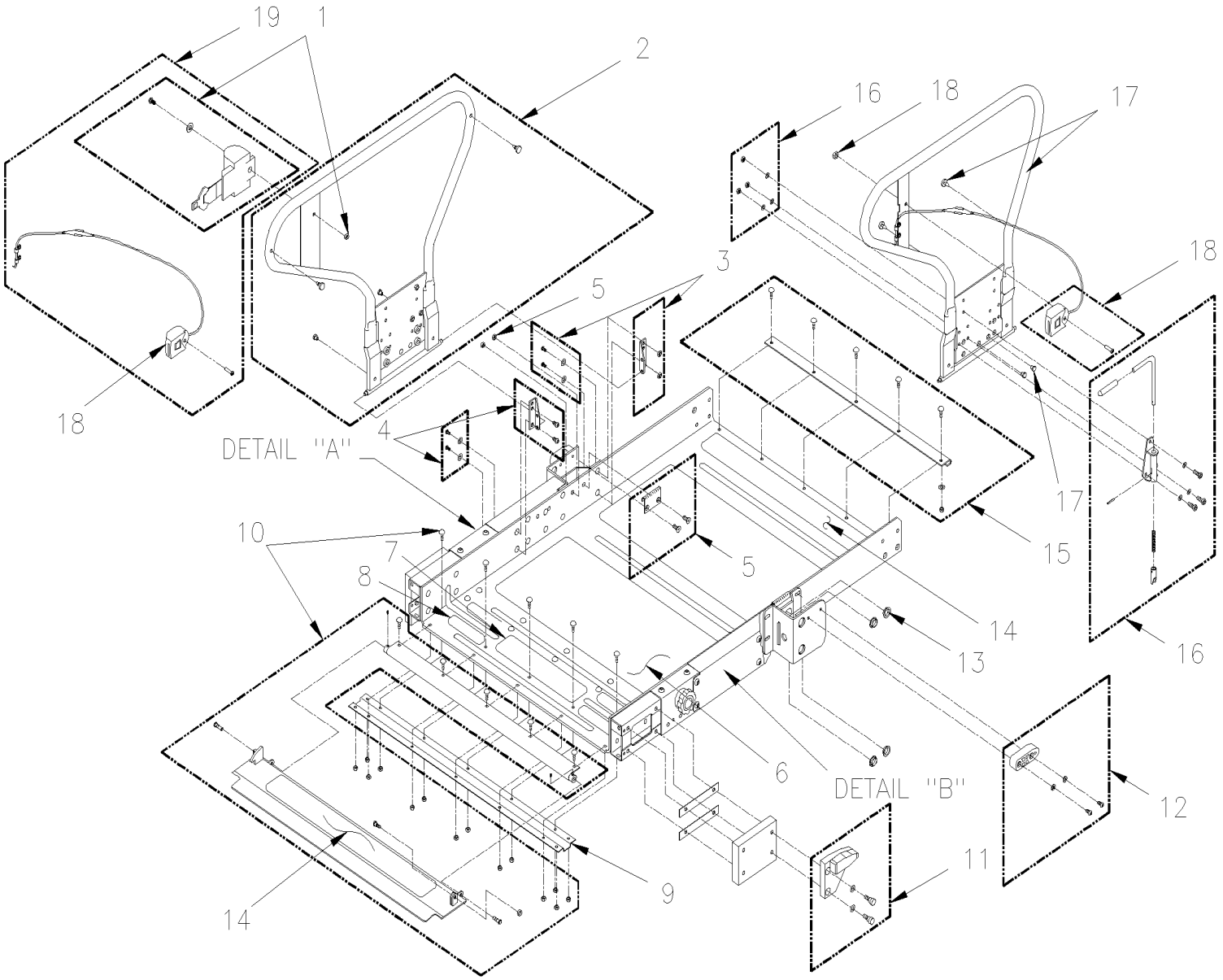

From 4-8279 To 5-8605		Date:07/2024	PAGE:Y2-2380-22
W.C.L. "RICON" - PLATFORM ASSY MODEL "F9T"			

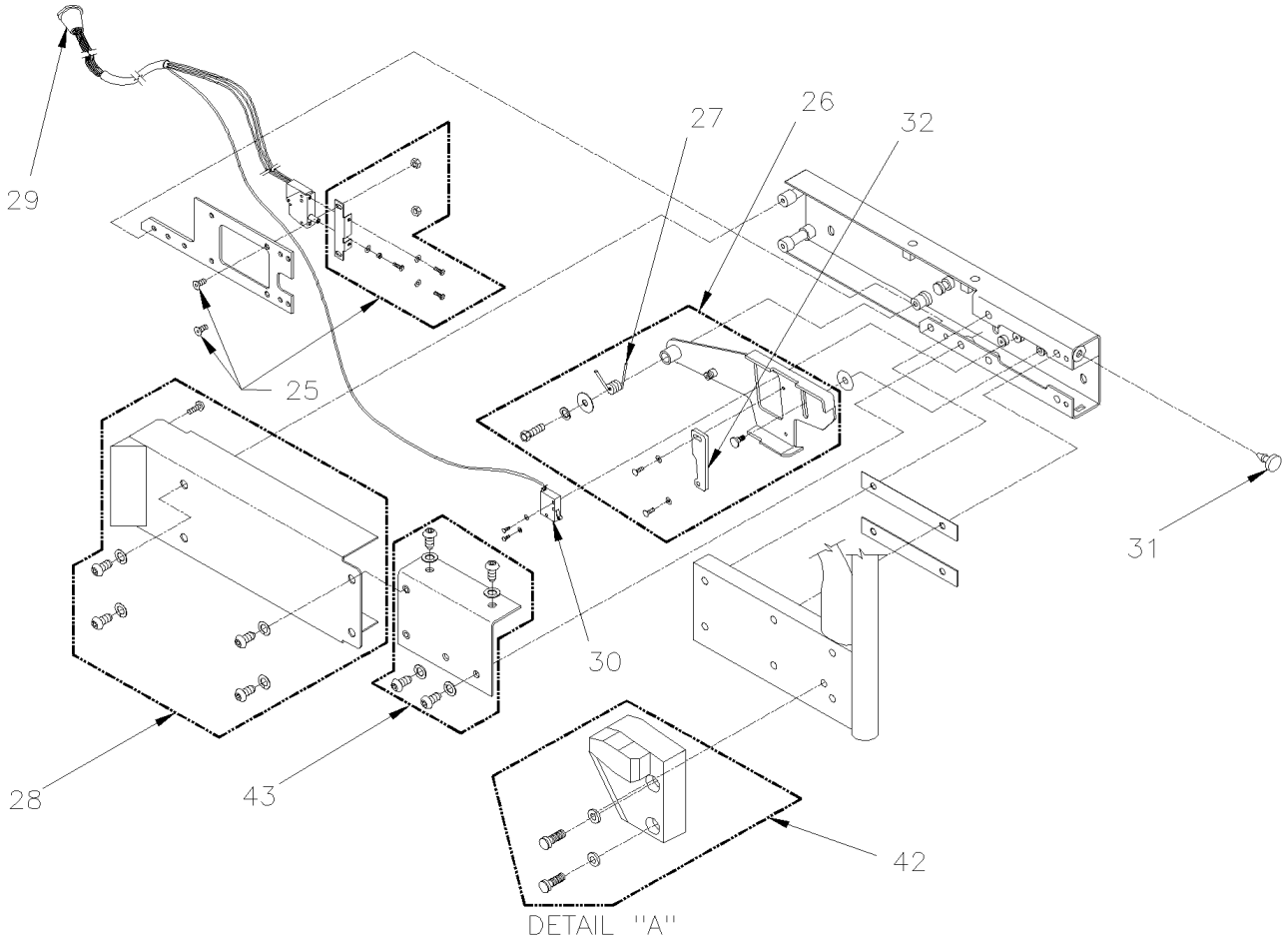

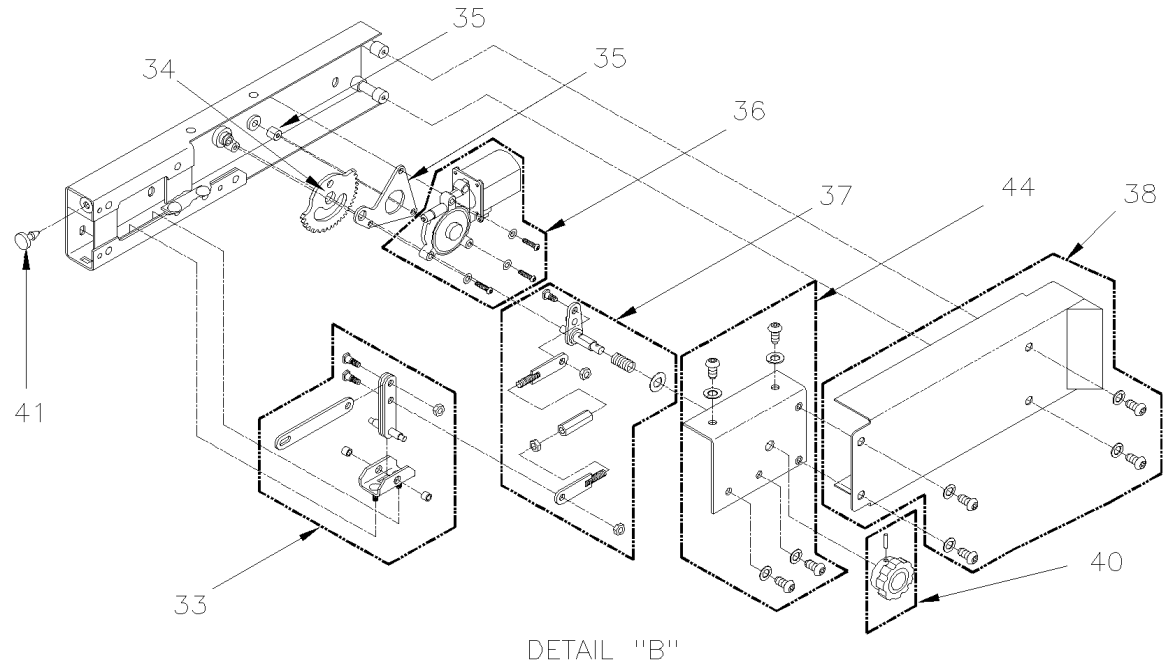

From 4-8279 To 5-8605		Date:07/2024	PAGE:Y2-2380-22

W.C.L. "RICON" - PLATFORM ASSY MODEL "F9T"

Item#	Part	Description	XLII 45	XLII MTH40	XLII MTH45	XLII MTH45E	NOTES
1	862116	RETRACTOR-RESTRAINT BELT	1				
2	19508803	KIT, FOLDING HANDRAIL, LH	1				
3	19509877	KIT, HANDRAIL PIVOT BRACKET ASSY RH	1				
4	19509878	KIT, HANDRAIL PIVOT BRACKET ASSY RH	1				
5	Call order desk	KIT, HANDRAIL STRIKER	1				P
6	863620	SAFETY TREAD / 25.50x12 / OCEAN GREY	1				
7	863016	SAFETY TREAD / 12.75x3.0 / SAFETY YELLOW	1				
8	863017	SAFETY TREAD / 5.5x1.5 / SAFETY YELLOW	1				
9	19509879	PLATFORM STIFFENER, FRONT	4				
10	Call order desk	KIT, ROLLSTOP ASSY	1				P
11	862114	BLOCK / PLAFORM GUIDE / RH	1				
12	862115	BLOCK / PLAFORM GUIDE / LH	1				
13	863018	BEARING, FLANGED, 3/4I.D. X 1/4W	2				
14	863621	SAFETY TREAD / 25.50x3.0 / SAFETY YELLOW	4				
15	863021	KIT, STIFFENER, PLATFORM, REAR	1				
16	864174	KIT LATCH ASSY	1				
17	19508804	KIT, FOLDING HANDRAIL, RH	1				
17	862120	BUMPER / RUBBER 1.000 O.D. x .13THK	2				
17	Call order desk	BUMPER / RUBBER 1.000 O.D. x .50THK	2				P
17	Call order desk	BUMPER / RUBBER .870 O.D. x .40THK	2				P
17	Call order desk	BUMPER / RUBBER .630 O.D. x .31THK	4				P
18	7775207	KIT, SAFETY BELT BUCKLE ASSEMBLY WITH DETECTOR	1				
19	862124	BUCKLE-RESTRAINT BELT W/O SWITCH	1				
25	863036	KIT, MOUNTING BRACKET, LIMIT SWITCH	1				
26	863037	KIT, ACTUATOR FOOT ASSY	1				
27	862121	SPRING / LH / ROLLSTOP ACTUATOR RETURN	1				
28	19509874	KIT, SIDE COVER	1				
29	863039	HARNESS, W/TWO ROLLSTOP SWITCHES	1				
. NS	865043	. ROLLSTOP PLUNGER	1				
30	863129	LIMIT SWITCH	1				
31	862120	BUMPER / RUBBER 1.000 O.D. x .13THK	1				
32	863041	PLATE, ACTUATOR, SWITCH	1				
33	863031	KIT, ROLLSTOP LINKAGE	1				
34	862996	KIT, ROLLSTOP GEAR	1				
35	863032	KIT, GEAR MOTOR MTG PLATE	1				
36	862117	KIT MOTOR, 24V W/HARDAWARE	1				
37	863033	KIT, GEAR LINKAGE	1				
38	19509874	KIT, SIDE COVER	1				
40	862210	KNOB KIT	1				
41	862120	BUMPER / RUBBER 1.000 O.D. x .13THK	1				
42	Call order desk	KIT, PLATFORM GUIDE LH	1				P
43	19509876	KIT, ROLLSTOP RELEASE BRACKET	1				

From 4-8279 To 5-8605		Date:07/2024	PAGE:Y2-2380-22

W.C.L. "RICON" - PLATFORM ASSY MODEL "F9T"

Item#	Part	Description	XLII 45	XLII MTH40	XLII MTH45	XLII MTH45E	NOTES
44	19509875	KIT, ROLLSTOP ACTUATOR BRACKET	1				
		P) CALL ORDER DESK FOR SPECIFIC APPLICATION (V.I.N.)					

From 5-8606 To 6-8906		Date:07/2024	PAGE:Y2-2380-23
W.C.L. "RICON" - PLATFORM ASSY MODEL "F9TF"			

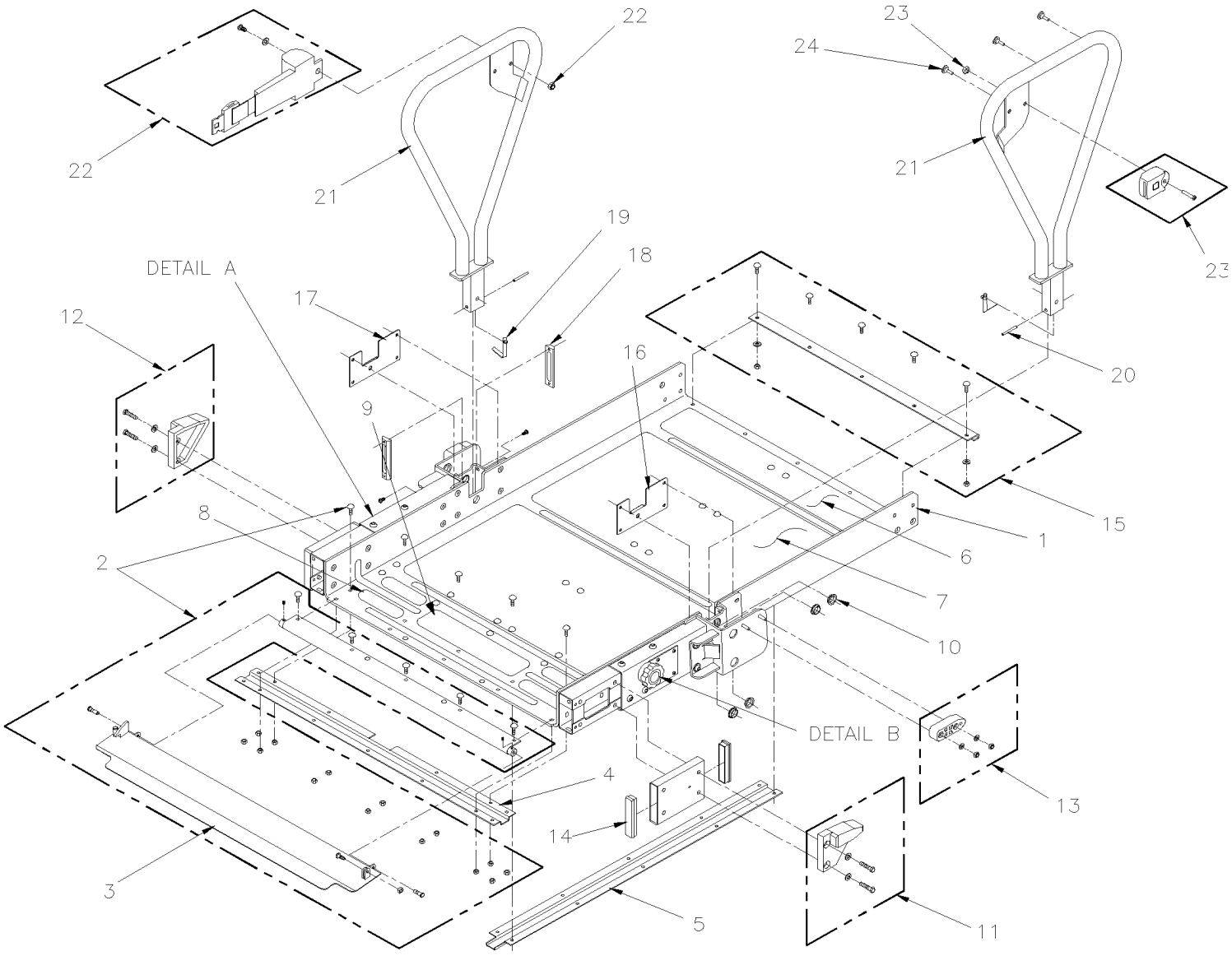

From 5-8606 To 6-8906		Date:07/2024	PAGE:Y2-2380-23
W.C.L. "RICON" - PLATFORM ASSY MODEL "F9TF"			

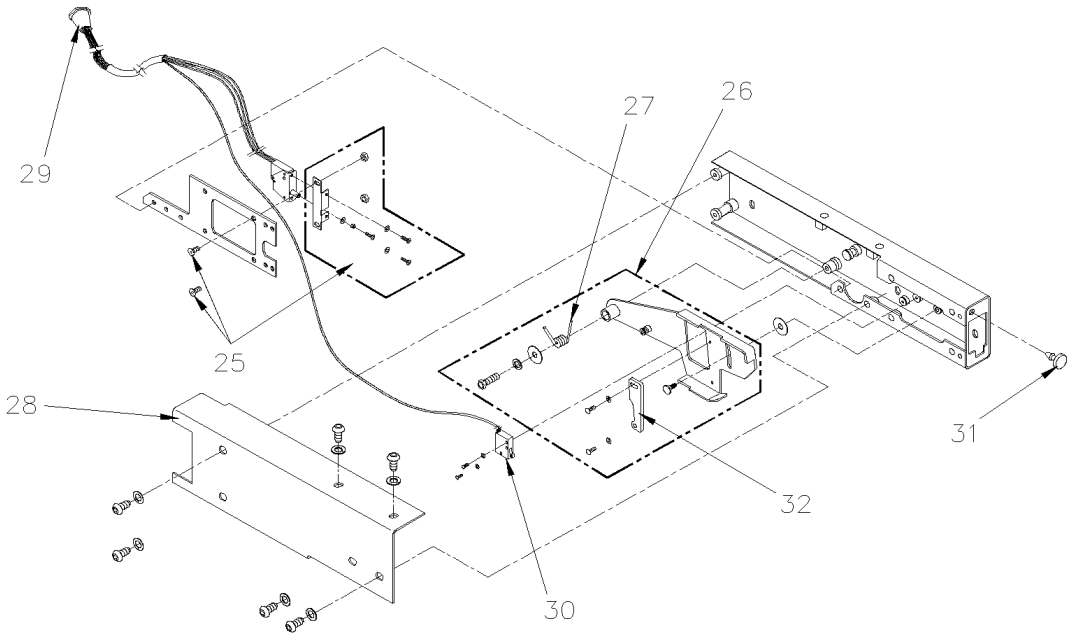

DETAIL A

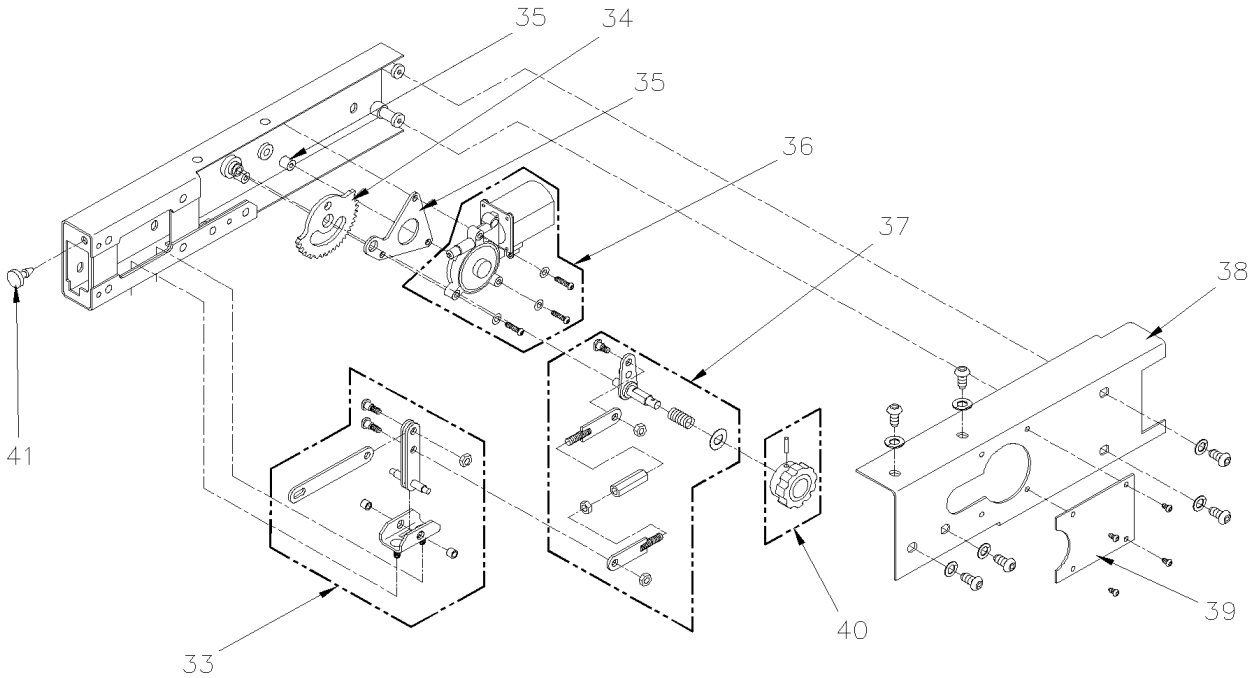

DETAIL B

From 5-8606 To 6-8906		Date:07/2024	PAGE:Y2-2380-23

W.C.L. "RICON" - PLATFORM ASSY MODEL "F9TF"

Item#	Part	Description	XLII 45	XLII MTH40	XLII MTH45	XLII MTH45E	NOTES
1	865627	PLATFORM	1				
2	863010	KIT, ROLLSTOP ASSEMBLY	1				
3	Call order desk	ROLLSTOP, PAINTED	1				P
4	865628	STIFFENER & HARNESS CONDUIT, NOTCHED	1				
5	865629	HARNESS CONDUIT, FRONT TO REAR	1				
6	863014	SAFETREAD, 3.0 X 31.0, YELLOW	1				
7	863015	SAFETREAD, 16.0 X 31.0, GRAY	1				
8	863016	SAFETY TREAD / 12.75x3.0 / SAFETY YELLOW	1				
9	863017	SAFETY TREAD / 5.5x1.5 / SAFETY YELLOW	4				
10	863018	BEARING, FLANGED, 3/4I.D. X 1/4W	1				
11	862114	BLOCK / PLAFORM GUIDE / RH	1				
12	862115	BLOCK / PLAFORM GUIDE / LH	1				
13	863019	KIT, PLATFORM GUIDE, REAR	2				
14	863020	CAP, RECTANGULAR, SNAP-IN	4				
15	863021	KIT, STIFFENER, PLATFORM, REAR	1				
16	865630	PLATE, PIN LOCK, RH To FORMER	1				
16	860098	PLATE, PIN LOCK From CURRENT	1				
17	865631	PLATE, PIN LOCK, LH To FORMER	1				
17	860098	PLATE, PIN LOCK From CURRENT	1				
18	863024	HANDRAIL GUIDE	4				
19	863618	BUTTON, HANDRAIL LOCK	2				
20	863026	PIN, HANDRAIL PIVOT	2				
21	864222	HANDRAIL	2				
22	863028	KIT, SAFETY BELT W/RETRACTOR	1				
23	863029	KIT, SAFETY BELT BUCKLE ASSEMBLY	1				
23	7775207	KIT, SAFETY BELT BUCKLE ASSEMBLY WITH DETECTOR	1				
24	862120	BUMPER / RUBBER 1.000 O.D. x .13THK	1				
25	863036	KIT, MOUNTING BRACKET, LIMIT SWITCH	1				
26	863037	KIT, ACTUATOR FOOT ASSY	1				
27	862121	SPRING / LH / ROLLSTOP ACTUATOR RETURN	1				
28	863038	COVER, ROLLSTOP, LH	1				
29	863039	HARNESS, W/TWO ROLLSTOP SWITCHES	1				
. NS	865043	. ROLLSTOP PLUNGER	1				
30	863040	SWITCH LIMIT, W/LEADS	1				
31	862120	BUMPER / RUBBER 1.000 O.D. x .13THK	1				
32	863041	PLATE, ACTUATOR, SWITCH	1				
33	863031	KIT, ROLLSTOP LINKAGE	1				
34	862996	KIT, ROLLSTOP GEAR	1				
35	863032	KIT, GEAR MOTOR MTG PLATE	1				
36	862117	KIT MOTOR, 24V W/HARDAWARE	1				
37	863033	KIT, GEAR LINKAGE	1				
38	863034	COVER, ROLLSTOP, RH	1				

From 5-8606 To 6-8906		Date:07/2024	PAGE:Y2-2380-23

W.C.L. "RICON" - PLATFORM ASSY MODEL "F9TF"

Item#	Part	Description	XLII 45	XLII MTH40	XLII MTH45	XLII MTH45E	NOTES
39	868236	COVER PLATE, MANUAL RELEASE	1				
40	862210	KNOB KIT	1				
41	862120	BUMPER / RUBBER 1.000 O.D. x .13THK	1				
		P) CALL ORDER DESK FOR SPECIFIC APPLICATION (V.I.N.)					

From Y-7046 To 1-7680		Date:07/2024	PAGE:Y2-2380-30
W.C.L. "RICON" - TRAVELING FRAME ASSY MODEL "F9A"			

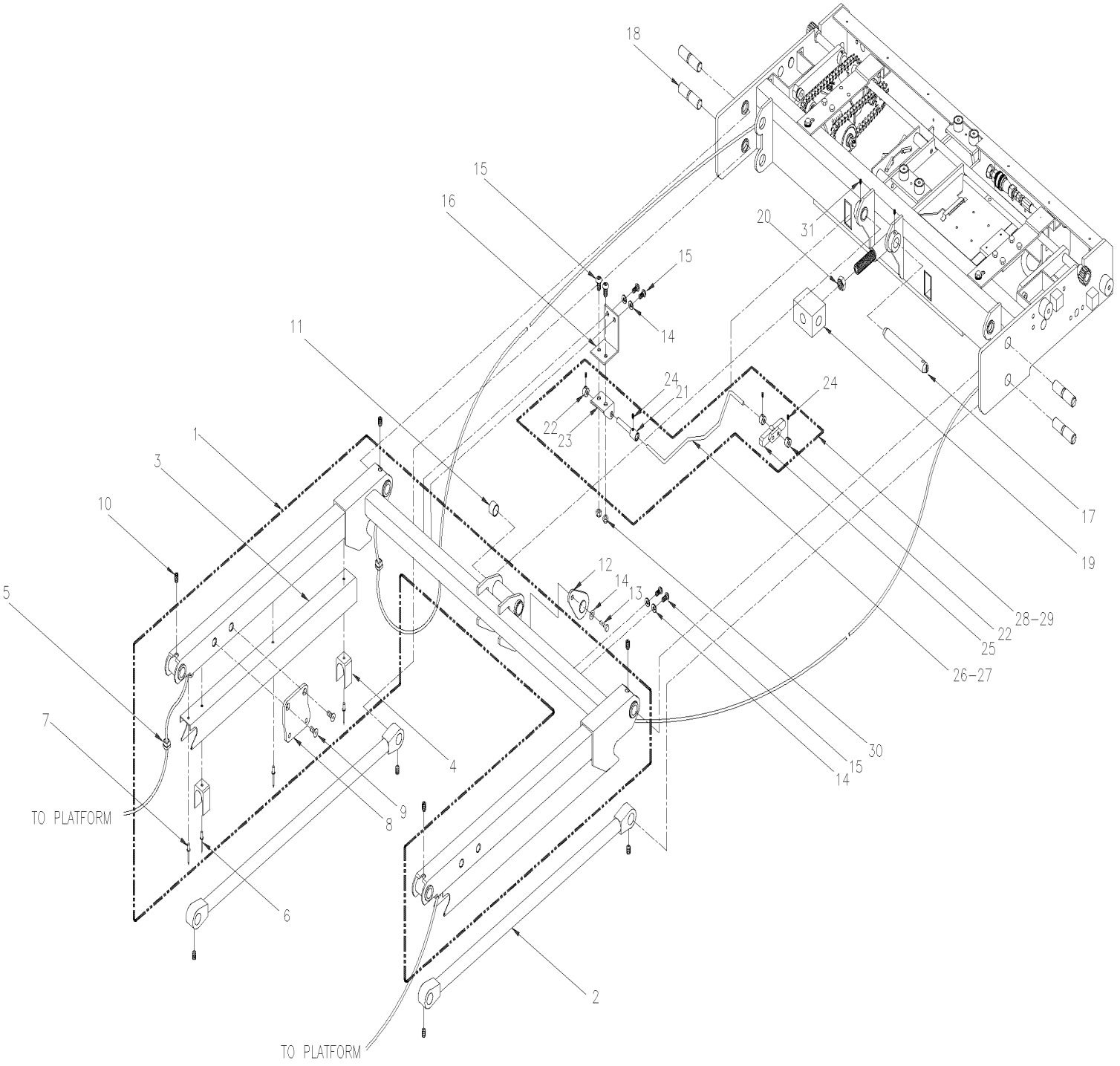

From Y-7046 To 1-7680		Date:07/2024	PAGE:Y2-2380-30

W.C.L. "RICON" - TRAVELING FRAME ASSY MODEL "F9A"

Item#	Part	Description	XLII 45	XLII MTH40	XLII MTH45	XLII MTH45E	NOTES
1	862125	LIFTING FRAME-ASSY / 43.00 CENTERS / EXT	1				
2	862126	ARM-WASSY / LOWER / 43.00 CENTERS	2				
3	Call order desk	COVER-ARM 30.313 CENTERS	2				P
4	Call order desk	BLOCK-ARM GUIDE	4				P
5	Call order desk	STRAIN RELIEF	4				P
6	Call order desk	RIVET STEEL 3/16x5/8	4				P
7	Call order desk	RIVET STEEL 3/16x3/8	4				P
8	Call order desk	PLATE-BRIDGE PLATE ACTUATOR MOUNT	2				P
9	Call order desk	SCREW CAP FL HEXS 1/4-20x5/8	4				P
10	Call order desk	SCREW SET HEXS SS 5/16-18x.50 5/16-18x1/2 SS	8				P
11	862127	BEARING DU / .75x.875x.63	6				
12	862212	KIT KEEPER PLATE	1				
13	Call order desk	SCREW CAP HEX 5/16-18x5/8 SS	2				P
14	Call order desk	WASHER LO SPT 5/16 SS	6				P
15	Call order desk	SCREW CAP BUT 5/16-18x5/8 SS	6				P
16	Call order desk	BRACKET-ACTUATOR ROD PIVOT / EXT	1				P
17	863055	PIN, .75D X 6.0L	1				
18	862128	PIN-PIVOT / LIFTING FRAME	4				
19	196113	TRUNNION-CYLINDER	1				
20	Call order desk	NUT HEX JAM 3/4-16 SS	1				P
21	Call order desk	COLLAR-ACTUATOR ROD	1				P
22	Call order desk	COLLAR .25x.63x.38	3				P
23	Call order desk	BRACKET-F9000 SERIES ELCT SYSTEM	1				P
24	Call order desk	SCREW SET HEXS SS 10-32x1/4 #10-32x1/4 SS	6				P
25	Call order desk	BLOCK-SWITCH ACTUATOR CAM	1				P
26	Call order desk	ROD-SWITCH CAM ACTUATOR LH	1				P
27	Call order desk	ROD-SWITCH CAM ACTUATOR RH	1				P
28	862129	SWITCH ACTUATOR ASSY / LH	1				
29	862130	SWITCH ACTUATOR ASSY / RH	1				
30	Call order desk	NUT HEX THN 5/16-18 NYL	2				P
31	Call order desk	SCREW SET HEXS SS 1/4-20x1/4 1/4-20x1/4 SS	2				P
		P) CALL ORDER DESK FOR SPECIFIC APPLICATION (V.I.N.)					

From 1-7681 To 4-8278		Date:07/2024	PAGE:Y2-2380-31
W.C.L. "RICON" - TRAVELING FRAME ASSY MODEL "HC-L002"			

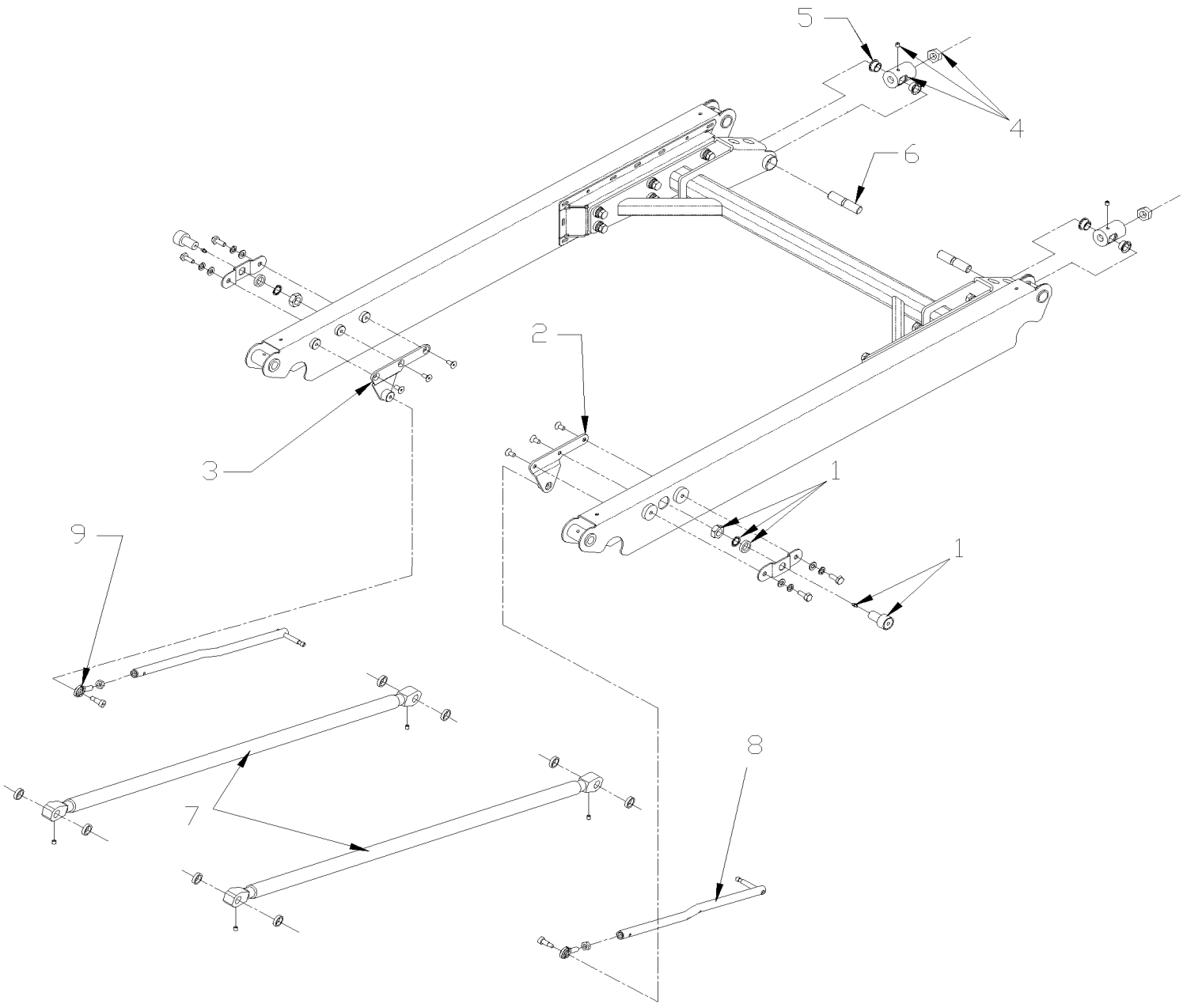

From 1-7681 To 4-8278		Date:07/2024	PAGE:Y2-2380-31

W.C.L. "RICON" - TRAVELING FRAME ASSY MODEL "HC-L002"

Item#	Part	Description	XLII 45	XLII MTH40	XLII MTH45	XLII MTH45E	NOTES
1	Call order desk	KIT, ROLLER, 1.25ODX .75W, W/GREASE FITTING &	2				P
2	Call order desk	BRACKET / ACTUATOR ROD RH	1				P
3	Call order desk	BRACKET / ACTUATOR ROD LH	1				P
4	Call order desk	KIT TRUNNION	2				P
5	Call order desk	. BUSHING .75IDx.75W / (BAG OF 10)	4				P
6	Call order desk	PIN PIVOT .75x3.25	2				P
7	Call order desk	KIT LOWER ARM	2				P
8	Call order desk	KIT BRIDGEPLATE ACTUATOR	2				P
9	Call order desk	ROD END, M10x14MM, M10-1.5	2				P
		P) CALL ORDER DESK FOR SPECIFIC APPLICATION (V.I.N.)					

From 1-8279 To 6-8906		Date:07/2024	PAGE:Y2-2380-32
W.C.L. "RICON" - TRAVELING FRAME ASSY MODEL "F9T" & "F9TF"			

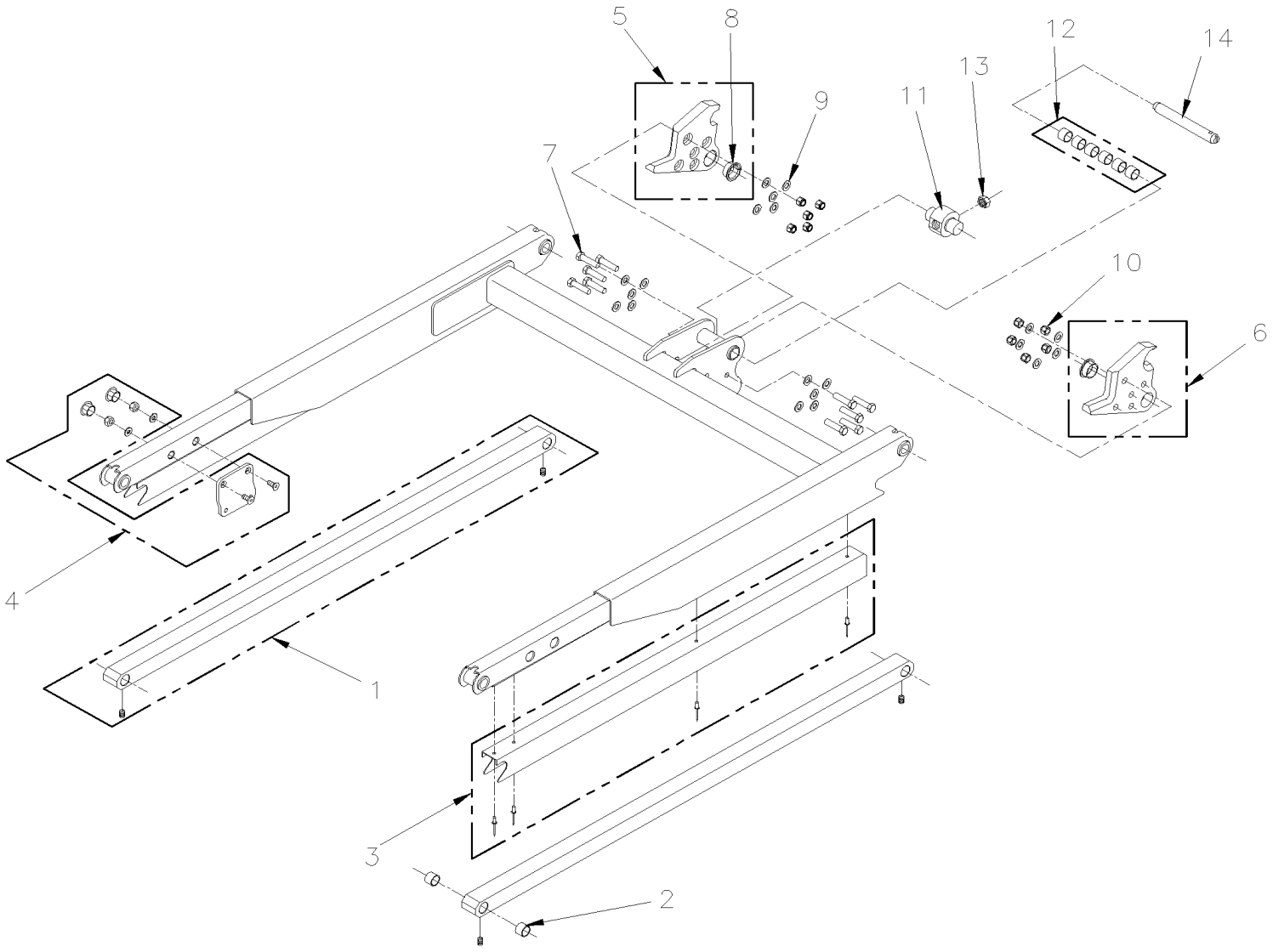

From 1-8279 To 6-8906		Date:07/2024	PAGE:Y2-2380-32

W.C.L. "RICON" - TRAVELING FRAME ASSY MODEL "F9T" & "F9TF"

Item#	Part	Description	XLII 45	XLII MTH40	XLII MTH45	XLII MTH45E	NOTES
1	863042	KIT, LOWER ARM	2				
2	863043	BUSHING, .88O.D. X .75I.D. X .38	4				
3	863044	KIT, COVER, LOWER ARM	2				
4	863045	KIT, PLATE, BRIDGEPLATE ACTUATOR	2				
5	863046	PLATE ASSY, CLEVIS REINFORCEMENT, LH	1				
6	863047	PLATE ASSY, CLEVIS REINFORCEMENT, RH	1				
7	863048	SCREW CAP HEX 3/8-16x1 1/2 SS	1				
8	863049	BEARING, FLANGED, 1.00 I.D. X .75W	2				
9	863050	WASHER FL .40x.75x.06 SS	2				
10	863051	NUT, ESN, 3/8-16, SS	1				
11	863052	TRUNNION, SOLID PIN	1				
12	863053	KIT, BEARING, .75I.D. X .875O.D. X .63	1				
13	863054	NUT, JAM, 3/4-16	1				
14	863055	PIN, .75D X 6.0L	1				

From Y-7046 To 1-7680		Date:07/2024	PAGE:Y2-2380-40
W.C.L. "RICON" - CARRIAGE ASSY MODEL "F9A"			

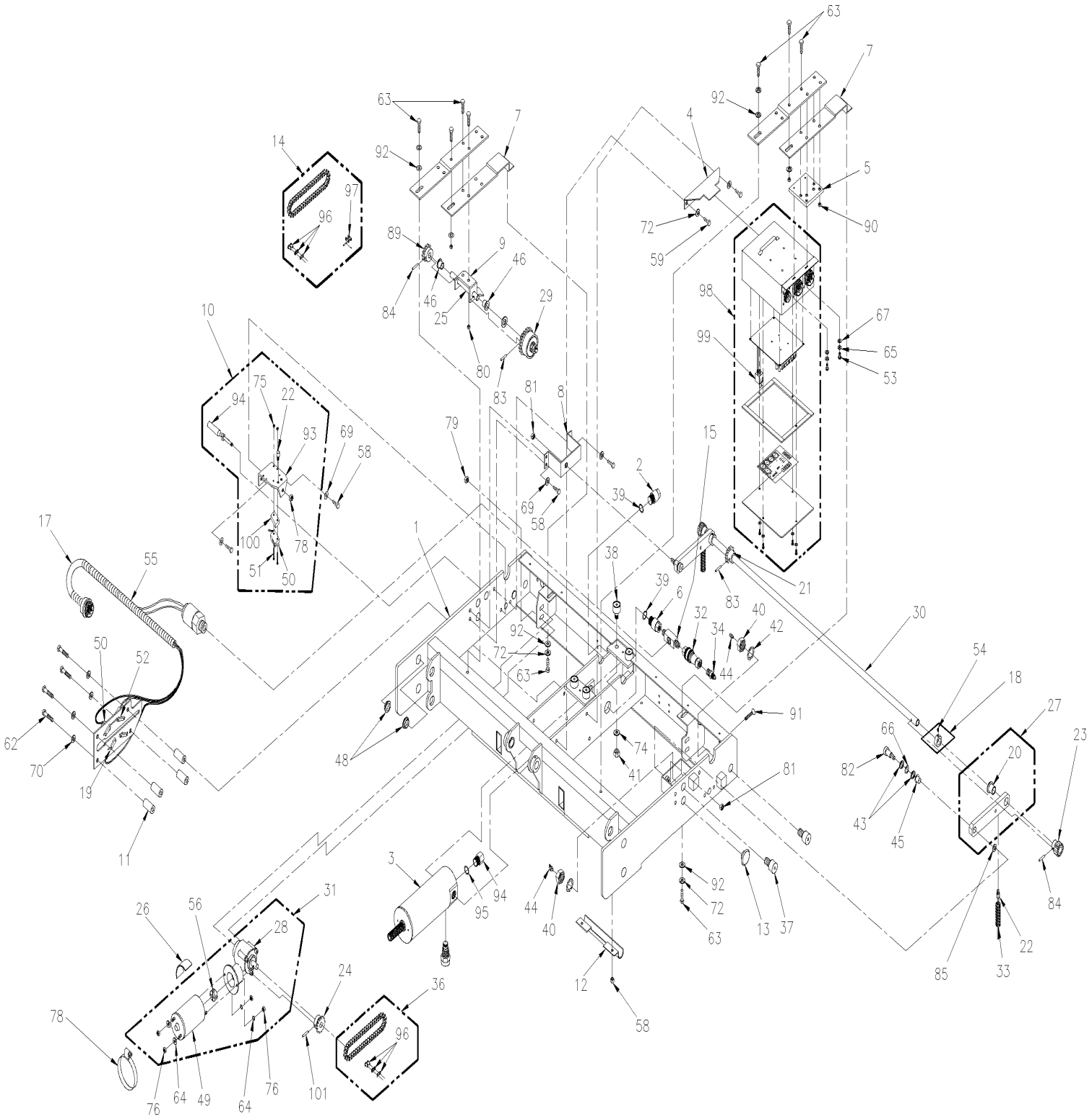

From Y-7046 To 1-7680		Date:07/2024	PAGE:Y2-2380-40

W.C.L. "RICON" - CARRIAGE ASSY MODEL "F9A"

Item#	Part	Description	XLII 45	XLII MTH40	XLII MTH45	XLII MTH45E	NOTES
1	Call order desk	CARRIAGE-WASSY STANDARD	1				P
2	Call order desk	FITTING / PIVOT	1				P
3	862131	CYLINDER / HYDRAULIC / WO/INTERNAL POT	1				
4	Call order desk	BRACKET-CARRIAGE ELECT BOX MTG	1				P
6	863583	KIT, FITTING, PIVOT ¼ NPT, WITH O-RING	1				
7	863068	BRACKET, IDLER SHAFT, REAR	2				
8	Call order desk	BRACKET-ASSY / DRIVE SHAFT ARM / PIVOT	2				P
9	Call order desk	SUPPORT / WASSY / IDLER SHAFT	1				P
10	862211	MICRO SWITCH ASSY	2				
11	Call order desk	SPACER-SWITCH PLATE / STAND OFF	3				P
12	Call order desk	CLAMP-HARNESS	1				P
13	Call order desk	BUTTON / CARRIAGE / GUIDE	2				P
14	862132	CHAIN DRIVE / PRIMARY; TRAIN LIFT	1				
15	863583	KIT, FITTING, PIVOT ¼ NPT, WITH O-RING	1				
16	Call order desk	SWITCH PLATE	1				P
17	862133	HARNESS-ASSY SWITCH PLATE UP TO SEPT 99	1				
17	862134	HARNESS-ASSY SWITCH PLATE W/PRESSURE SWITCH FROM SEPT 99	1				
18	Call order desk	COLLAR SET SCREW	2				P
19	862135	BLOCK / SWITCH RETAINER / PLASTIC	4				
20	Call order desk	BEARING DU .625x.719x.38	2				P
21	862136	SPOCKET 12 TEETH #35 .625 BORE	1				
22	862137	BUTTON / SPRING SUPPROT	2				
23	862138	GEAR 1.125PD / .63 FACE W/HUB	2				
24	862139	SPOCKET 8 TEETH #35 .5 BORE	1				
25	862140	SHAFT / INTERMEDIATE DRIVE .50x5.00	1				
26	Call order desk	GASKET / RUBBER 1/8x1/2	1				P
27	Call order desk	LINK / DRIVE SHAFT / PIVOT / ASSY	2				P
28	862141	GEAR BOX / RATIO 24:1	1				
29	862142	CLUTCH / TORQUE LIMIT RICON	1				
30	862143	SHAFT / FINAL DRIVE - DS200	1				
31	862144	GEAR-MOTOR ASSY 24V	1				
32	863236	FITTING / QUICK-DISCONNECT 1/4	1				
33	862145	SPRING COMPRESSION .44x2.1	2				
34	863732	ADAPTOR STRAIGHT 1/4NPT-1/4JIC MALE	1				
36	862132	CHAIN DRIVE / PRIMARY; TRAIN LIFT	1				
37	Call order desk	CAM FOLLOWER 1 1/4x3/4 CRWND	4				P
38	N8886024	CAM FOLLOWER 1.00x5/8 / 7/16-20	4				
39	863582	O-RING / NITRILE .644x.87	2				
40	863733	NUT HEX JAM 3/16	5				
41	Call order desk	NUT HEX JAM 7/16-20	4				P
42	863734	WASHER LO INT 3/4	4				
43	Call order desk	WASHER NYL	4				P

From Y-7046 To 1-7680		Date:07/2024	PAGE:Y2-2380-40

W.C.L. "RICON" - CARRIAGE ASSY MODEL "F9A"

Item#	Part	Description	XLII 45	XLII MTH40	XLII MTH45	XLII MTH45E	NOTES
44	863735	FITTING / GREASE / 65DEG / PRESS-IN	4				
45	Call order desk	BUSHING NY LINER .50x.50	2				P
46	862146	BUSHING 12 EDU08 3/4x1/2	2				
47	Call order desk	BUSHING 12 FDU08 1x1/2	1				P
48	863018	BEARING, FLANGED, 3/4I.D. X 1/4W	8				
49	862147	MOTOR-1/4HP / 24VDC / SHORT SHAFT	1				
50	862122	LIMIT SWITCH / SEALED / PRS	1				
51	Call order desk	SCREW MA PAN PH #4-40x1 1/8	4				P
52	Call order desk	SCREW MA PAN PH #4-40x1.00 ZP	8				P
53	Call order desk	SCREW MA PAN PH #8-32x1/2 SS	2				P
54	Call order desk	SCREW SET HEXS 10-24x1/4 #10-24x1/4	2				P
55	561482	CONVOLUTED TUBING / UNSLIT / BLACK / .500"	4				
56	Call order desk	COUPLING-ACTUATOR	1				P
58	N.P.N.	SCREW CAP HEX SS 1/4-20X1/2	10				4
59	Call order desk	SCREW CAP HEX 5/16-18x1/2 SS	2				P
61	Call order desk	SCREW CAP HEX 5/16-18x7/8 G5	1				P
62	Call order desk	SCREW CAP HEX 5/16-18x2 1/2 G5	3				P
63	Call order desk	SCREW CAP HEX 5/16-18x3/4 SS	4				P
64	Call order desk	WASHER LO INT #10	4				P
65	Call order desk	WASHER LO SPT #8 SS	2				P
66	Call order desk	WASHER SPR WAVE 1/2	2				P
67	Call order desk	WASHER FL #8 SS	22				P
69	N8885992	WASHER FL .250 SS	10				
70	Call order desk	WASHER FL 5/16	3				P
72	Call order desk	WASHER LO SPT 5/16 SS	10				P
74	N8886025	WASHER LO EXT 7/16 SS	4				
75	500425	NUT HEX NYRT #4-40 SS	4				
76	Call order desk	NUT HEX #10-32	4				P
78	5001352	NUT HEX NYRT 1/4-20 SS	2				
79	Call order desk	NUT HEX 5/16-18 SS	2				P
80	500685	NUT HEX NYRT 5/16-18 SS	2				
81	Call order desk	NUT HEX NYRT 3/8-16	2				P
82	862148	BOLT-SHOULDER 1/2x3/4	2				
83	862149	PIN "SPIROL" 5/32x1 1/4	2				
84	862150	PIN "SPIROL" 5/32x1.00	3				
85	Call order desk	WASHER .578x1.06x.310 NYL	2				P
86	Call order desk	CLUTCH / TORQUE LIMITING WARNER	1				P
90	500685	NUT HEX NYRT 5/16-18 SS	4				
91	Call order desk	SCREW CAP FL HEXS 1/4-20x5/8	2				P
92	Call order desk	WASHER FL .32x.75x.08 SS	AR				P
93	Call order desk	BRACKET-PLUNGER / MICRO SWITCH	3				P
94	863234	PLUG 3/4-16 CAV / O-RING SEAL / HEX HD	1				

From Y-7046 To 1-7680		Date:07/2024	PAGE:Y2-2380-40

W.C.L. "RICON" - CARRIAGE ASSY MODEL "F9A"

Item#	Part	Description	XLII 45	XLII MTH40	XLII MTH45	XLII MTH45E	NOTES
NS	862209	SPRING	1				
95	863235	SPACER-IMMEDIATE DRIVE	1				
96	862151	LINK-MASTER NICKEL #35	2				
97	862152	OFFSET-LINK #35 - 1/2 LINK	1				
98	862099	CONTROL BOX 24V / YELLOW / W STD W.C.L.	1				
98	862957	CONTROL BOX 24V / YELLOW / W/REMOVABLE W.C.L.	1				
99	862153	RELAY 12V	1				
100	Call order desk	BRACKET / ALUM-LIMIT SWITCH	1				P
101	862154	ROLL PIN 5/32x3/4	1				
		4) NO PARTS NUMBER					
		P) CALL ORDER DESK FOR SPECIFIC APPLICATION (V.I.N.)					

From 1-7681 To 4-8278		Date:07/2024	PAGE:Y2-2380-41
W.C.L. "RICON" - CARRIAGE ASSY MODEL "HC-L002"			

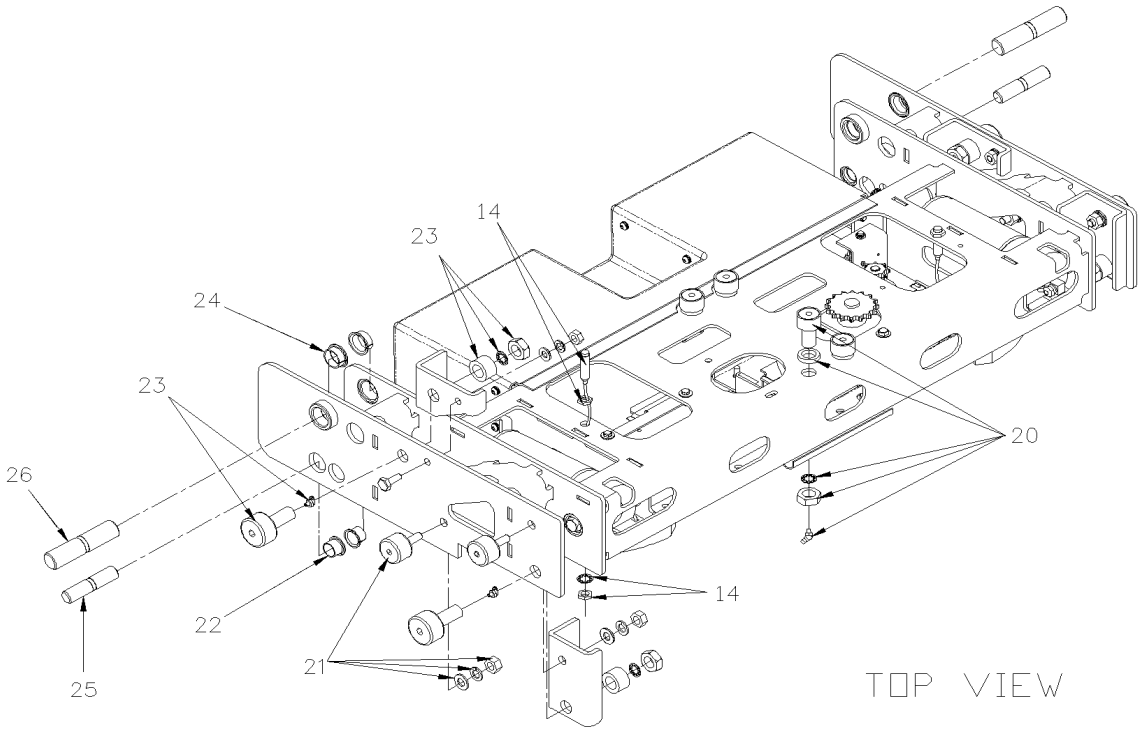

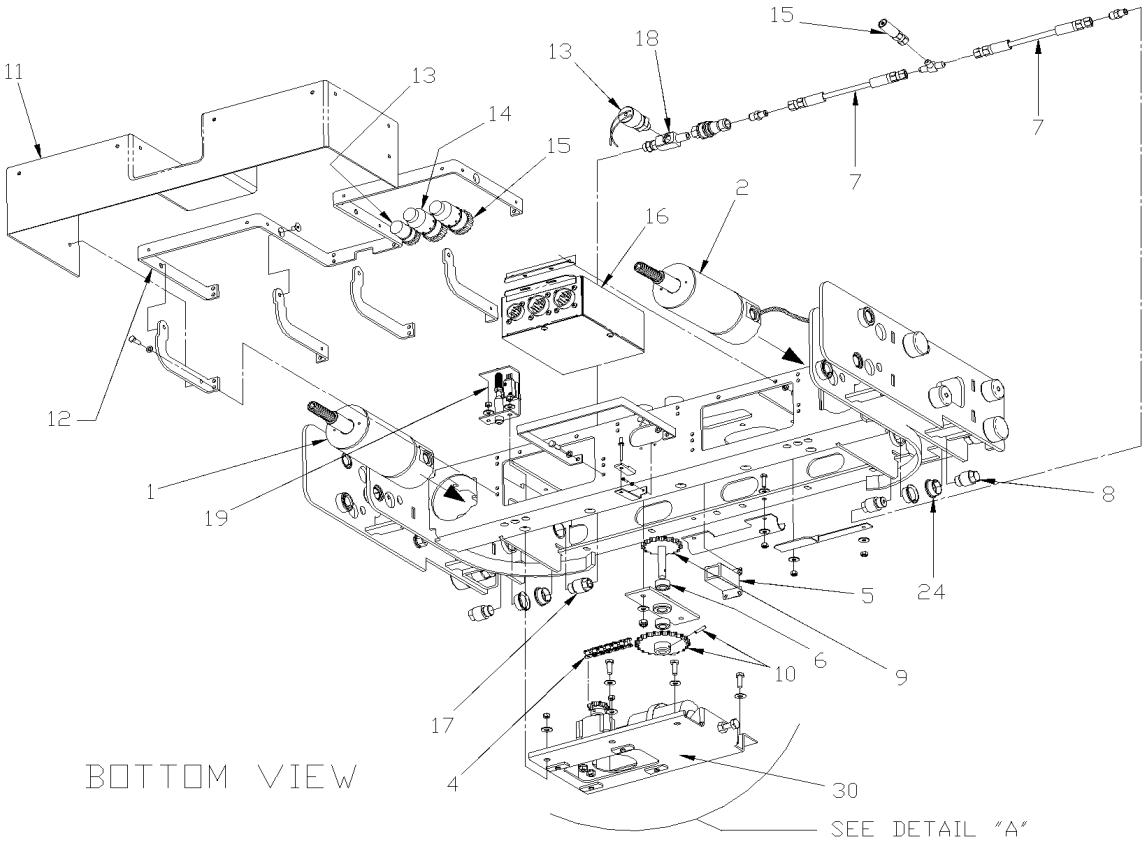

From 1-7681 To 4-8278		Date:07/2024	PAGE:Y2-2380-41
W.C.L. "RICON" - CARRIAGE ASSY MODEL "HC-L002"			

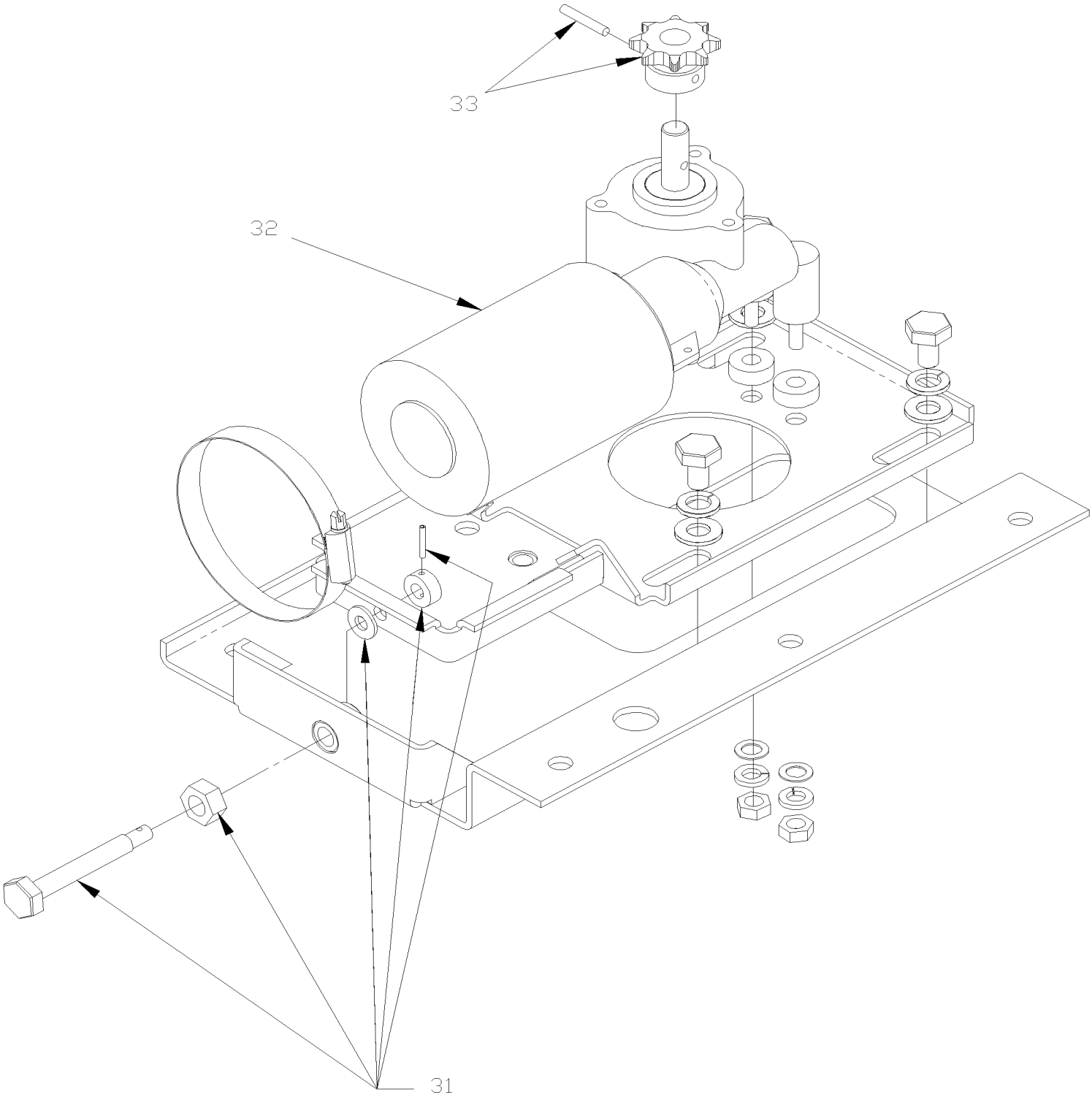

DETAIL "A"

From 1-7681 To 4-8278		Date:07/2024	PAGE:Y2-2380-41

W.C.L. "RICON" - CARRIAGE ASSY MODEL "HC-L002"

Item#	Part	Description	XLII 45	XLII MTH40	XLII MTH45	XLII MTH45E	NOTES
1	862214	HYDRAULIC CYLINDER ASSY / W/O POTENTIOMETER	1				
2	862215	HYDRAULIC CYLINDER ASSY / W/ POTENTIOMETER	1				
4	Call order desk	CHAIN / PRIMARY / CARRIAGE MOTOR	1				P
5	Call order desk	CYCLE COUNTER	1				P
6	860244	BEARING .5OIDx1.125OD	2				
7	Call order desk	HYDRAULIC HOSE SYNFLEX / 7.25”	2				P
8	Call order desk	FITTING / PIVOT	2				P
9	860249	DRIVE SHAFT / W/SPROCKET	1				
10	860255	KIT, SPROCKET, 22T, #40, W/PIN	1				
11	Call order desk	COVER / CARRIAGE	1				P
12	Call order desk	BRACKET MOUNTING / COVER	1				P
13	864346	HARNESS CARRIAGE / W/PRESSURE SWITCH	1				
14	864345	HARNESS CARRIAGE / W/PRESSURE SWITCH	1				
15	Call order desk	HARNESS PUMP-PENDANT / W/HYDRAULIC HOSE	1				P
16	862434	CONTROLLER 24V	1				
17	863583	KIT, FITTING, PIVOT ¼ NPT, WITH O-RING	2				
18	Call order desk	ADAPTOR / PRESSURE SWITCH	1				P
19	Call order desk	STOW SWITCH ASSY	1				P
20	863059	KIT, CARRIAGE ROLLER, 1 1/4 O.D.	4				
21	Call order desk	KIT SHOCK ABSORBER	4				P
22	Call order desk	BEARING DU .75IDx.50W,	4				P
23	Call order desk	KIT ROLLER 1.75OD / W/GREASE FITTING	4				P
24	863062	FLANGED BEARING, 1” I.D.B20	8				
25	Call order desk	PIN PIVOT .75x3.25	2				P
26	Call order desk	PIN PIVOT 1.00x4.25	2				P
NS	863084	DUST CAP, CONTROLLER PROGRAMMING CONNECTOR	1				
30	Call order desk	MOTOR ASSEMBLY / CARRIAGE DRIVE	1				P
31	Call order desk	. KIT ADJUSTMENT SCREW / DRIVE MOTOR	1				P
32	862144	. GEAR-MOTOR ASSY 24V	1				
33	Call order desk	. KIT SPROCKET 8T #40 / W/PIN	1				P
		P) CALL ORDER DESK FOR SPECIFIC APPLICATION (V.I.N.)					

From 4-8279 To 6-8906		Date:07/2024	PAGE:Y2-2380-42
W.C.L. "RICON" - CARRIAGE ASSY MODEL "F9T" & "F9TF"			

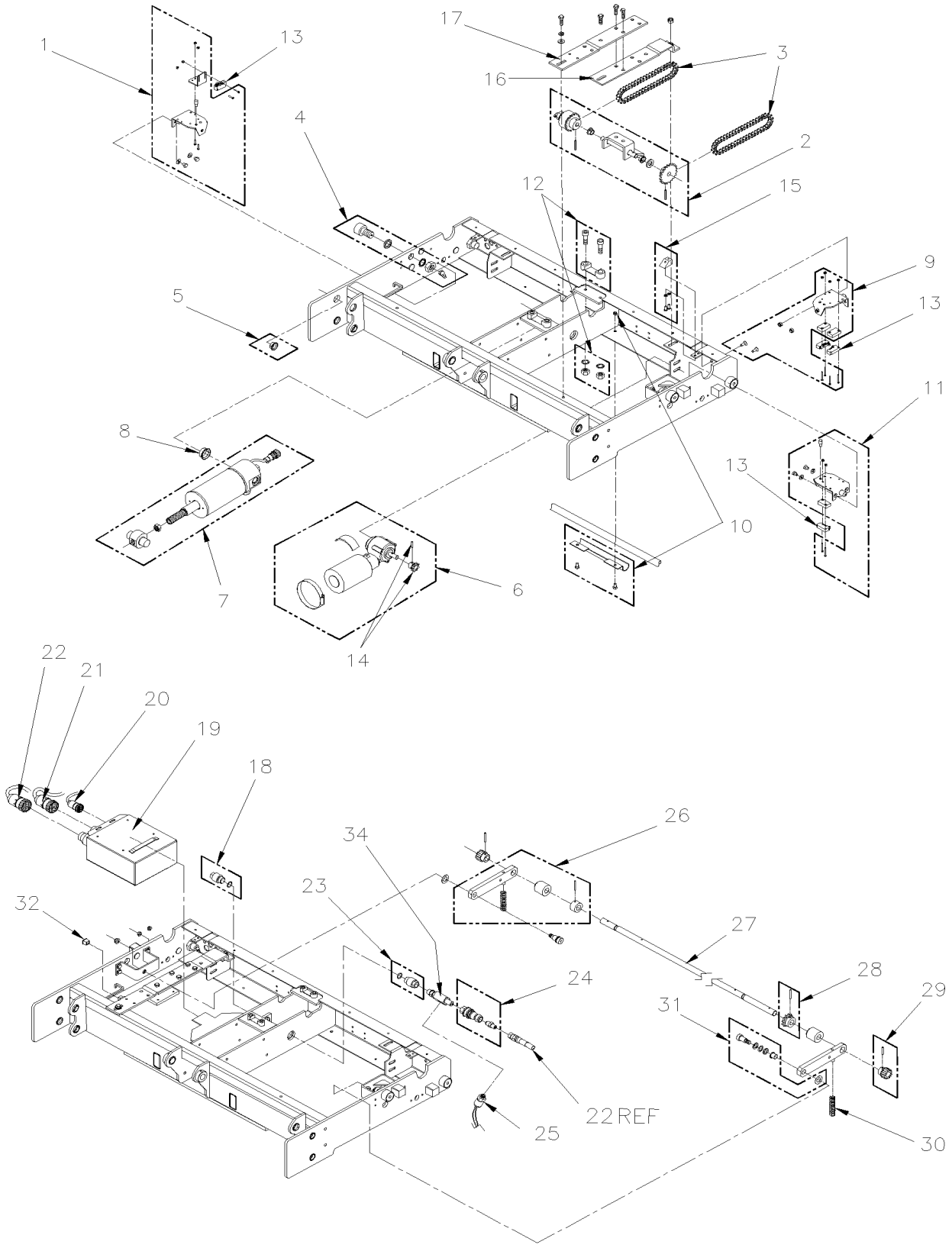

From 4-8279 To 6-8906		Date:07/2024	PAGE:Y2-2380-42

W.C.L. "RICON" - CARRIAGE ASSY MODEL "F9T" & "F9TF"

Item#	Part	Description	XLII 45	XLII MTH40	XLII MTH45	XLII MTH45E	NOTES
1	863056	KIT, PLATFORM RELEASE SWITCH BRACKET	1				
2	863057	KIT, INTERMEDIATE SHAFT ASSY	1				
3	863058	DRIVE CHAIN	2				
4	19509869	KIT, CARRIAGE ROLLER, 1 1/4 O.D. To 5-8605	4				
4	863059	KIT, CARRIAGE ROLLER, 1 1/4 O.D. From 5-8606	4				
5	863128	BEARING	1				
6	863060	KIT, GEAR MOTOR ASSY, 24V	1				
7	864161	HYDRAULIC CYLINDER ASSEMBLY To 5-8605	1				
7	863061	HYDRAULIC CYLINDER ASSEMBLY From 5-8606	1				
8	863062	FLANGED BEARING, 1” I.D.B20	1				
9	863063	KIT, STOW SWITCH BRACKET	1				
10	863064	KIT, HARNESS CLAMP	1				
11	863065	KIT, DEPLOY SWITCH BRACKET	1				
12	N8892390	KIT, GUIDE BLOCKS CARRIAGE	1				
13	863129	LIMIT SWITCH	4				
14	863066	KIT, SPROCKET, 8T	1				
15	863067	KIT, MANUAL RELEASE RESET RAMP	2				
16	863068	BRACKET, IDLER SHAFT, REAR	1				
17	863069	BRACKET, IDLER SHAFT, FRONT	1				
18	863070	KIT, PIVOT CAP, HYDRAULIC CYLINDER	1				
19	196349	CONTROL BOX 24V / YELLOW (#29272) / W/REMOVABLE W.C.L. To 5-8605	1				
19	862957	CONTROL BOX 24V / YELLOW / W/REMOVABLE W.C.L. From 5-8606	1				
20	863071	HARNESS, ELECTRICAL, HYDRAULIC CYLINDER To 5-8605	1				
20	863071	HARNESS, ELECTRICAL, HYDRAULIC CYLINDER From 5-8606	1				
21	866153	HARNESS, ELECTRICAL, CARRIAGE To 5-8605	1				
21	863072	HARNESS, ELECTRICAL, CARRIAGE From 5-8606	1				
22	19507735	HARNESS, ELECTRICAL, MAIN, W/HYDRAULIC LINE To 5-8605	1				
22	864071	HARNESS, ELECTRICAL, MAIN, W/HYDRAULIC LINE From 5-8606	1				
23	19509871	KIT, PIVOT FITTING, HYDRAULIC CYLINDER To 5-8605	1				
23	863074	KIT, PIVOT FITTING, HYDRAULIC CYLINDER From 5-8606	1				
24	863076	KIT, QUICK DISCONNECT FITTING	1				
25	863077	KIT, PRESSURE SWITCH, W/ELECTRICAL TERMINALS	1				
26	863078	KIT, DRIVESHAFT LINK ASSY	2				
27	863079	DRIVESHAFT, FINAL	1				
28	863080	KIT, SPROCKET, 12 TEETH	1				
29	863081	KIT, PINION GEAR, 18 TEETH	2				
30	863082	SPRING, COM, .609O.D. X 2.53	2				
31	863083	KIT, BUSHING ASSY, DRIVESHAFT LINK	2				
32	863084	DUST CAP, CONTROLLER PROGRAMMING CONNECTOR	1				
34	866059	MANIFOLD,HYD,PRESSURE SWITCH(PACKAGED)	1				

From Y-7046 To 1-7680		Date:07/2024	PAGE:Y2-2380-50
W.C.L. "RICON" - BRIDGE PLATE ASSY 9" MODEL "F9A"			

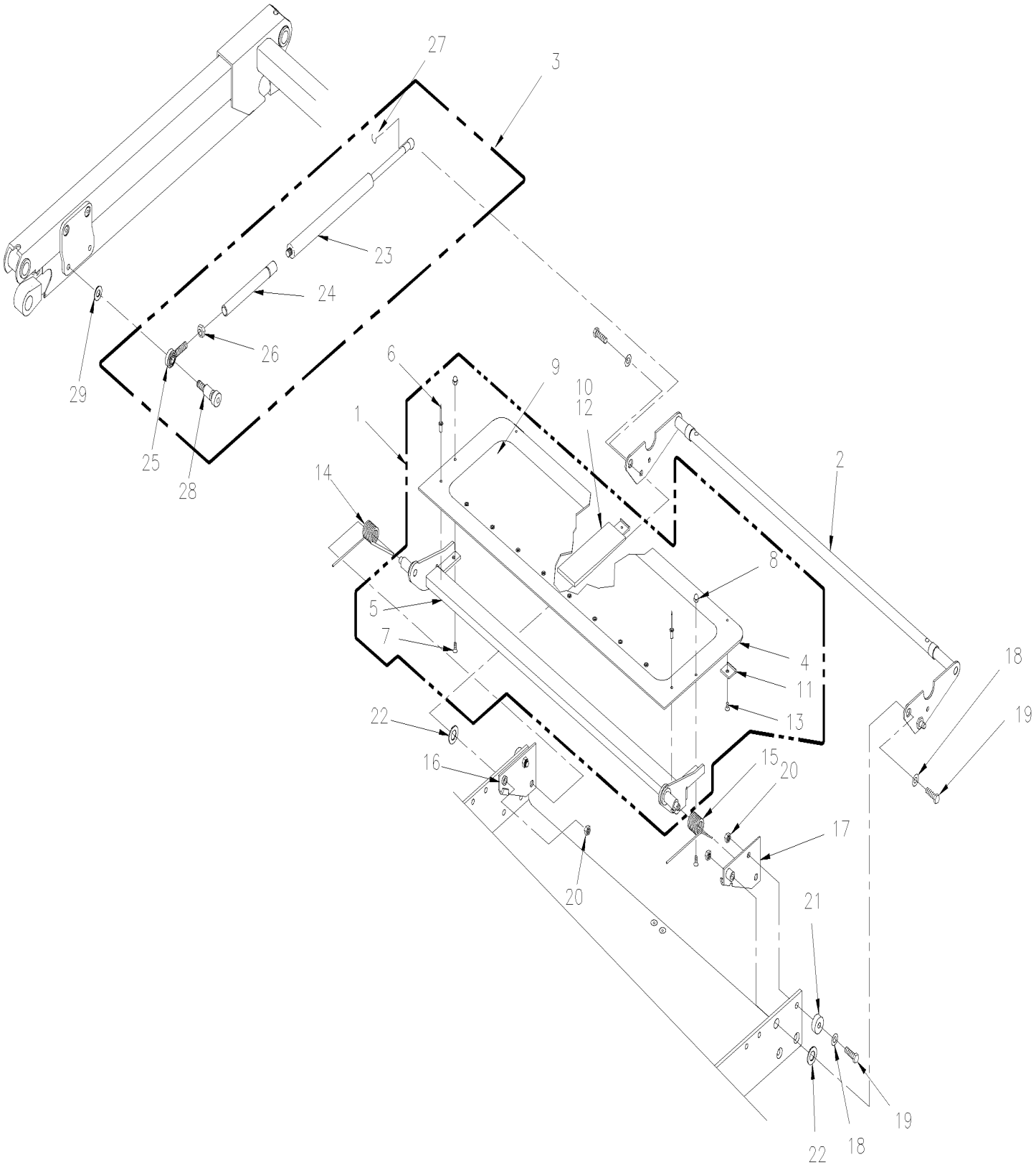

From Y-7046 To 1-7680		Date:07/2024	PAGE:Y2-2380-50

W.C.L. "RICON" - BRIDGE PLATE ASSY 9" MODEL "F9A"

Item#	Part	Description	XLII 45	XLII MTH40	XLII MTH45	XLII MTH45E	NOTES
1	860058	BRIDGEPLATE ASSEMBLY 9"	1				
2	8611004	STIRUP-W-ASSY / BRIDGEPLATE	1				
3	Call order desk	ROD-ASSY / BRIDGEPLATE ACTUATOR 26" UTS	2				P
3	196586	KIT, ACTUATOR ROD ASSEMBLY, BRIDGEPLATE	2				
4	860335	PLATE-BRIDGE BLANK 9.00"	1				
5	Call order desk	ASSY., WELD B-PLATE SUPPORT	1				P
6	Call order desk	RIVET-BLIND AL 3/16x3/8	10				P
7	Call order desk	SCREW CAP CK HEXS #10-24x1/2 SS	2				P
8	Call order desk	NUT HEX CAP #10-24	2				P
9	860341	SAFETY TREAD / 25.560x7.00 / SAFETY YELLOW	1				
10	860343	BLOCK-BRIDGEPLATE GUIDE / BUMPER	1				
11	860346	SKID-BRIDGEPLATE	3				
12	860347	TAPE-ADHESIVE / TRANSFER 10MILx 1" WIDE	AR				
13	Call order desk	SCREW MA FL PH #10-24x1/4	3				P
14	863106	SPRING, BRIDGEPLATE RETURN, LH	1				
15	863105	SPRING, BRIDGEPLATE RETURN, RH	1				
16	Call order desk	BRACKET-B-PLATE MOUNT / LH	1				P
17	Call order desk	BRACKET-B-PLATE MOUNT / RH	1				P
18	Call order desk	WASHER FL .32x.59x.06 SS	4				P
19	Call order desk	SCREW CAP HEX 5/16-18x1 1/4 SS	4				P
20	Call order desk	NUT HEX NYRT 5/16-18 SS	4				P
21	Call order desk	BUSHING .75x.32x.38	2				P
22	Call order desk	WASHER FL .578x1.067x.062 NYL	2				P
23	862155	SPRING-PNEUMATIC 100LBF 16.75"	2				
24	861709	ROD-ASSY / B-PLATE ACTUATOR 26" UTS	1				
24	Call order desk	ROD-ASSY / B-PLATE ACTUATOR 18.5"-23.5" UTS	1				P
25	Call order desk	ROD END-(M) LT THD R1700	2				P
26	Call order desk	NUT HEX LH 3/8-24	2				P
27	980017	CLIP BALL STUD 10MM RETAINER	2				
28	Call order desk	SCREW CAP HEX 5/16-18x1/2 SS	2				P
29	Call order desk	STANDOFF-BRIGEPLATE ACTUATOR	2				P
		P) CALL ORDER DESK FOR SPECIFIC APPLICATION (V.I.N.)					

From 1-7681 To 4-8278		Date:07/2024	PAGE:Y2-2380-51
W.C.L. "RICON" - BRIDGE PLATE ASSY 9" MODEL "HC-L002"			

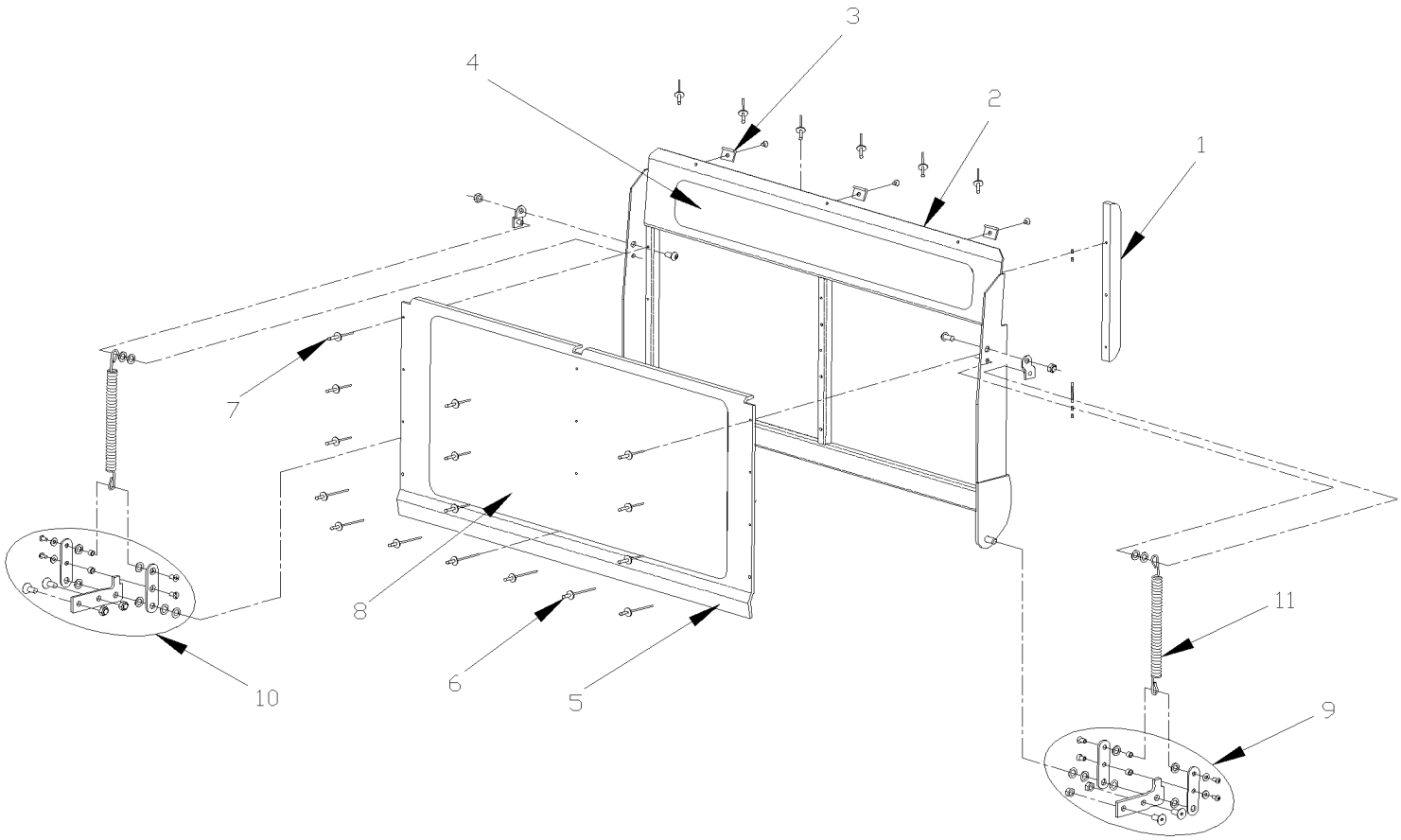

From 1-7681 To 4-8278		Date:07/2024	PAGE:Y2-2380-51

W.C.L. "RICON" - BRIDGE PLATE ASSY 9" MODEL "HC-L002"

Item#	Part	Description	XLII 45	XLII MTH40	XLII MTH45	XLII MTH45E	NOTES
1	Call order desk	SLIDER, BRIDGEPLATE	1				P
2	Call order desk	KIT, FRAME, BRIDGEPLATE	1				P
3	863103	. SKID, BRIDGEPLATE BRACKET	3				
4	863621	. SAFETY TREAD / 25.50x3.0 / SAFETY YELLOW	1				
5	Call order desk	KIT, BRIDGEPLATE COVER, W/SAFETREAD	1				P
6	Call order desk	. RIVET, 3/16, BAG OF 10	7				P
7	Call order desk	. RIVET, 1/8X1/2, BAG OF 10	9				P
8	863620	. SAFETY TREAD / 25.50x12 / OCEAN GREY	1				
9	Call order desk	KIT, BRIDGEPLATE PIVOT LINK, W/HARDWARE, RI	1				P
10	Call order desk	KIT, BRIDGEPLATE PIVOT LINK, W/HARDWARE, LEFT	1				P
11	Call order desk	SPRING, EXTENSION, BRIDGEPLATE ASSIST	2				P
		P) CALL ORDER DESK FOR SPECIFIC APPLICATION (V.I.N.)					

From 4-8279 To 6-8906		Date:07/2024	PAGE:Y2-2380-52
W.C.L. "RICON" - BRIDGE PLATE ASSY 9" MODEL "F9T" & "F9TF"			

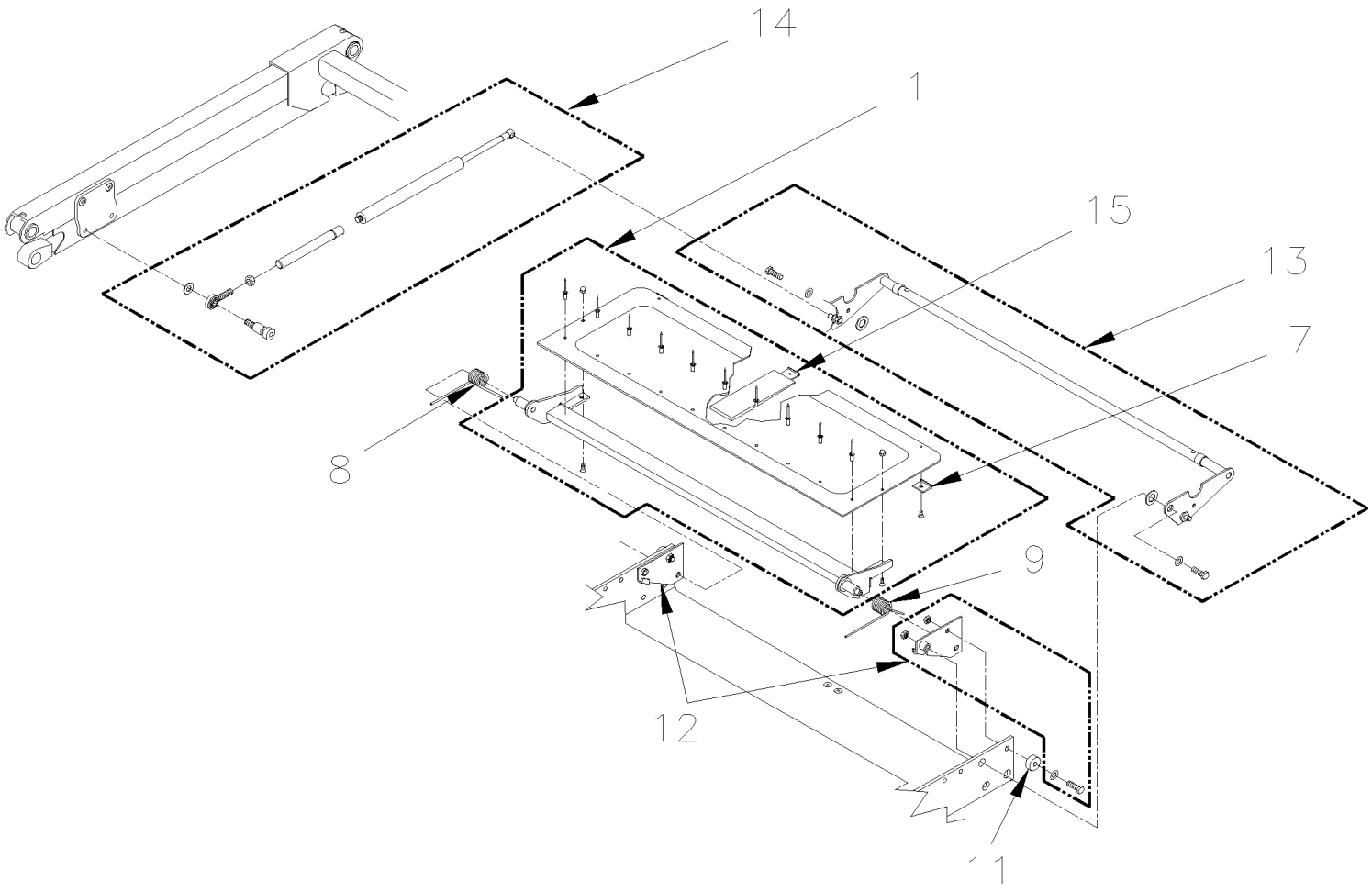

From 4-8279 To 6-8906		Date:07/2024	PAGE:Y2-2380-52
W.C.L. "RICON" - BRIDGE PLATE ASSY 9" MODEL "F9T" & "F9TF"			

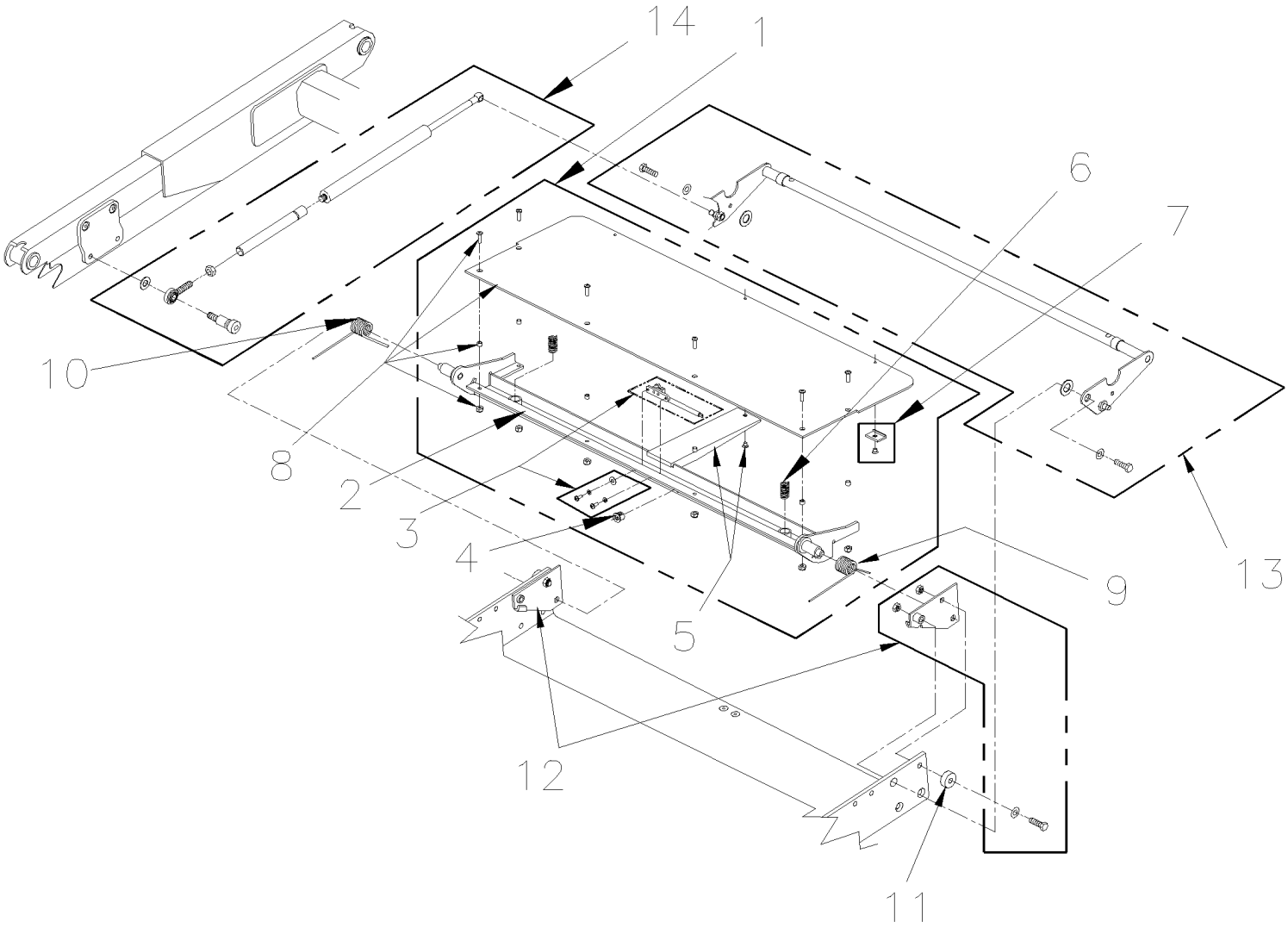

From 4-8279 To 6-8906		Date:07/2024	PAGE:Y2-2380-52

W.C.L. "RICON" - BRIDGE PLATE ASSY 9" MODEL "F9T" & "F9TF"

Item#	Part	Description	XLII 45	XLII MTH40	XLII MTH45	XLII MTH45E	NOTES
1	19509866	BRIDGEPLATE ASSEMBLY 9" To 5-8605	1				
1	863097	BRIDGEPLATE ASSEMBLY 9" From 5-8606	1				
2	860228	FRAME, BRIDGEPLATE	1				
3	863099	KIT, SWITCH ASSEMBLY	1				
4	863100	BUSHING, SNAP-IN, 1/2	1				
5	863101	KIT, GUIDE, BRIDGEPLATE, W/SCREW	1				
6	863102	SPRING, COMP. SST, .48OD X .75L	2				
7	863103	SKID, BRIDGEPLATE BRACKET	2				
8	863104	KIT, PLATE, BRIDGEPLATE	1				
9	863105	SPRING, BRIDGEPLATE RETURN, RH	1				
10	863106	SPRING, BRIDGEPLATE RETURN, LH	1				
11	863107	BUSHING .75x.32x.38	1				
12	863108	KIT, MOUNTING BRACKETS, LH AND RH	1				
13	863109	KIT, STIRRUP ASSEMBLY	1				
14	196586	KIT, ACTUATOR ROD ASSEMBLY, BRIDGEPLATE To 5-8605	1				
14	863110	KIT, ACTUATOR ROD ASSEMBLY, BRIDGEPLATE From 5-8606	2				
15	196658	BUMPER, BRIDGEPLATE To 5-8605	1				

From Y-7046 To 1-7680		Date:07/2024	PAGE:Y2-2380-60
W.C.L. "RICON" - PUMP INSTALLATION MODEL "F9A"			

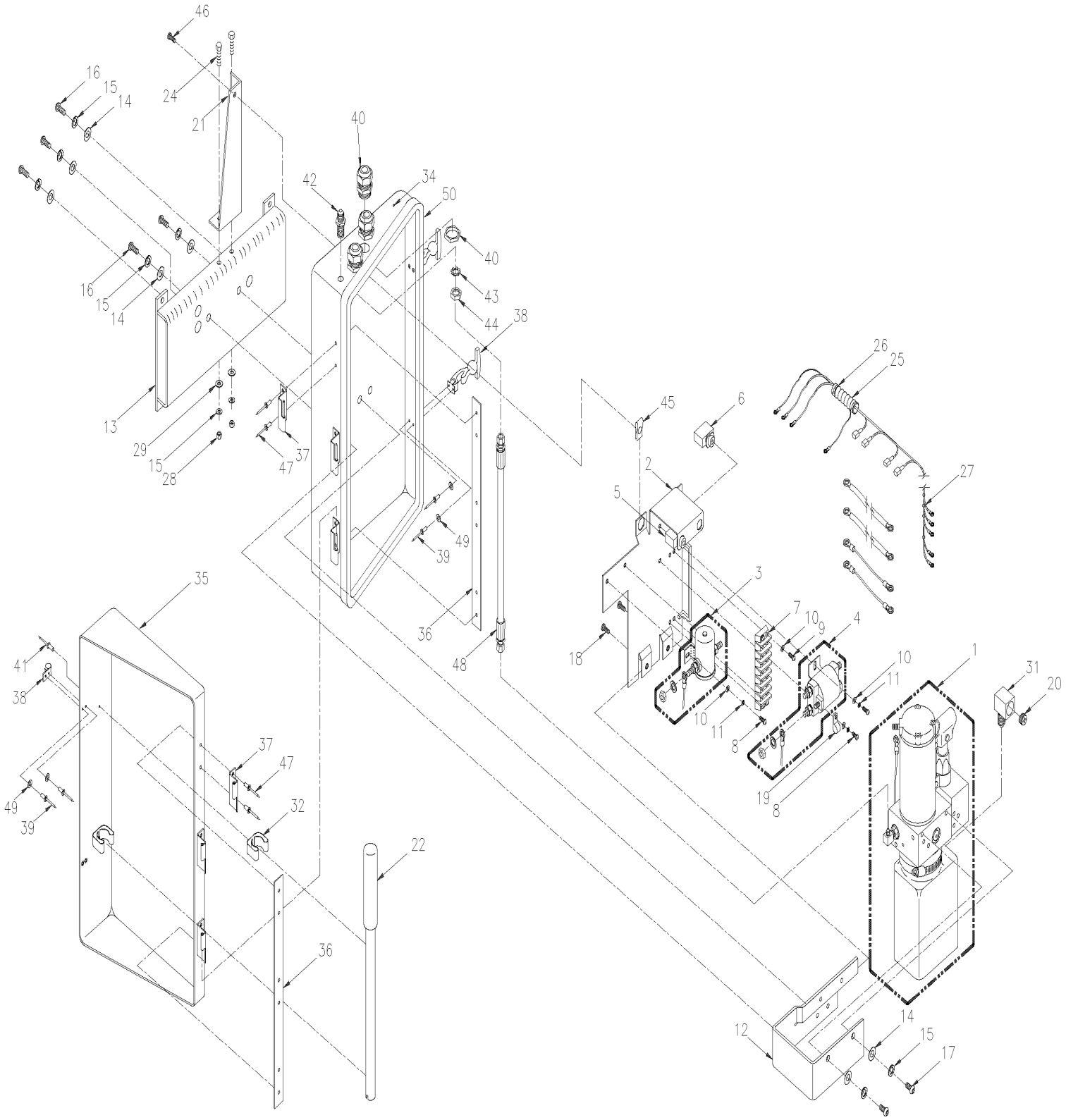

From Y-7046 To 1-7680		Date:07/2024	PAGE:Y2-2380-60

W.C.L. "RICON" - PUMP INSTALLATION MODEL "F9A"

Item#	Part	Description	XLII 45	XLII MTH40	XLII MTH45	XLII MTH45E	NOTES
1	**Y2-2380-65**	**W.C.L. "RICON" - PUMP ASSY**					
2	Call order desk	PLATE-WASSY / SOLENOID	1				P
3	862100	SOLENOID / SP 24V	1				
4	862101	SOLENOID-24V DP LARGE	1				
5	862102	CIRCUIT BREAKER / 8AMP	1				
6	862103	CIRCUIT BREAKER / 30AMPS	1				
6	860986	CIRCUIT BREAKER / 50AMPS	1				
7	Call order desk	TERMINAL STRIP / 10-18GA	1				P
8	Call order desk	SCREW MA PH #10-32x5/16 SS	4				P
9	Call order desk	SCREW MA PH #10-32x3/4	4				P
10	Call order desk	WASHER FL #10 SS	8				P
11	N8885969	WASHER LO SPT .193 SS	4				
12	Call order desk	BRACKET-PUMP MOUNTING	1				P
13	Call order desk	BRACKET-WASSY / PUMP MOUTING	1				P
14	Call order desk	WASHER FL .32x.75x.08 SS	7				P
15	Call order desk	WASHER LO SPT 5/16 SS	11				P
16	Call order desk	SCREW CAP BUT HEXS 5/16-24x3/4 SS	5				P
17	Call order desk	SCREW CAP BUT HEXS 5/16-18x3/4 SS	2				P
18	Call order desk	SCREW CAP BUT HEXS #10-32x1/2 SS	2				P
19	Call order desk	CLAMP / CABLE-3/8	1				P
20	863095	PLUG, BREATHER, RESERVOIR	1				
21	Call order desk	BRACKET-STIFFENER	1				P
22	868483	HANDLE-MANUAL BACKUP PUMP	1				
24	Call order desk	SCREW CAP HEX 5/16-18x3/4 SS	2				P
25	561482	CONVOLUTED TUBING / UNSLIT / BLACK / .500"	AR				
26	504012	CABLE TIE / 3/16" X 6"1/2	2				
27	504012	CABLE TIE / 3/16" X 6"1/2	9				
28	502600	NUT HEX NYRT 5/16-18 Z050	2				
29	5001189	NUT HEX 5/16-18 SS	2				
31	Call order desk	FITTING-STREET ELBOW / FEMALE	1				P
32	504585	SPRING CLIP 3/4"	2				
34	Call order desk	BASE-PUMP ENCLOSURE	1				P
35	Call order desk	DOOR-PUMP ENCLOSURE	1				P
36	Call order desk	PLATE REINFORCEMENT-PUMP ENCLOSURE	2				P
37	Call order desk	HINGE SS 2.50x2.00	6				P
38	Call order desk	LATCH / DRAW-FLEXIBLE-HANDLE	2				P
39	504431	RIVET POP DOME OE 1/8x3/8 AL	8				
40	Call order desk	STRAIN RELIEF / STRE THRU LIQ TIGHT	3				P
41	504247	RIVET POP DOME OE 5/32x3/8 AL	2				
42	863086	FITTING, BUN, 1/4J, 2.08L	1				
43	N8886025	WASHER LO EXT 7/16 SS	1				
44	Call order desk	NUT HEX JAM 7/16-20	1				P

From Y-7046 To 1-7680		Date:07/2024	PAGE:Y2-2380-60

W.C.L. "RICON" - PUMP INSTALLATION MODEL "F9A"

Item#	Part	Description	XLII 45	XLII MTH40	XLII MTH45	XLII MTH45E	NOTES
45	500837	NUT SPR U 1/4-20 .064-.125	1				
46	Call order desk	SCREW CAP BUT HEXS 1/4-20x3/4 SS	1				P
47	504120	RIVET POP DOME CLE 3/16x1/2 AL	12				
48	Call order desk	HOSE-ASSY / 11"x 1/4JIC x1/4JIC	1				P
49	Call order desk	WASHER FL #8	8				P
50	Call order desk	SEAL / DOOR-7/16X53/64	AR				P
		P) CALL ORDER DESK FOR SPECIFIC APPLICATION (V.I.N.)					

From 1-7681 To 4-8278		Date:07/2024	PAGE:Y2-2380-61
W.C.L. "RICON" - PUMP INSTALLATION MODEL "HC-L002"			

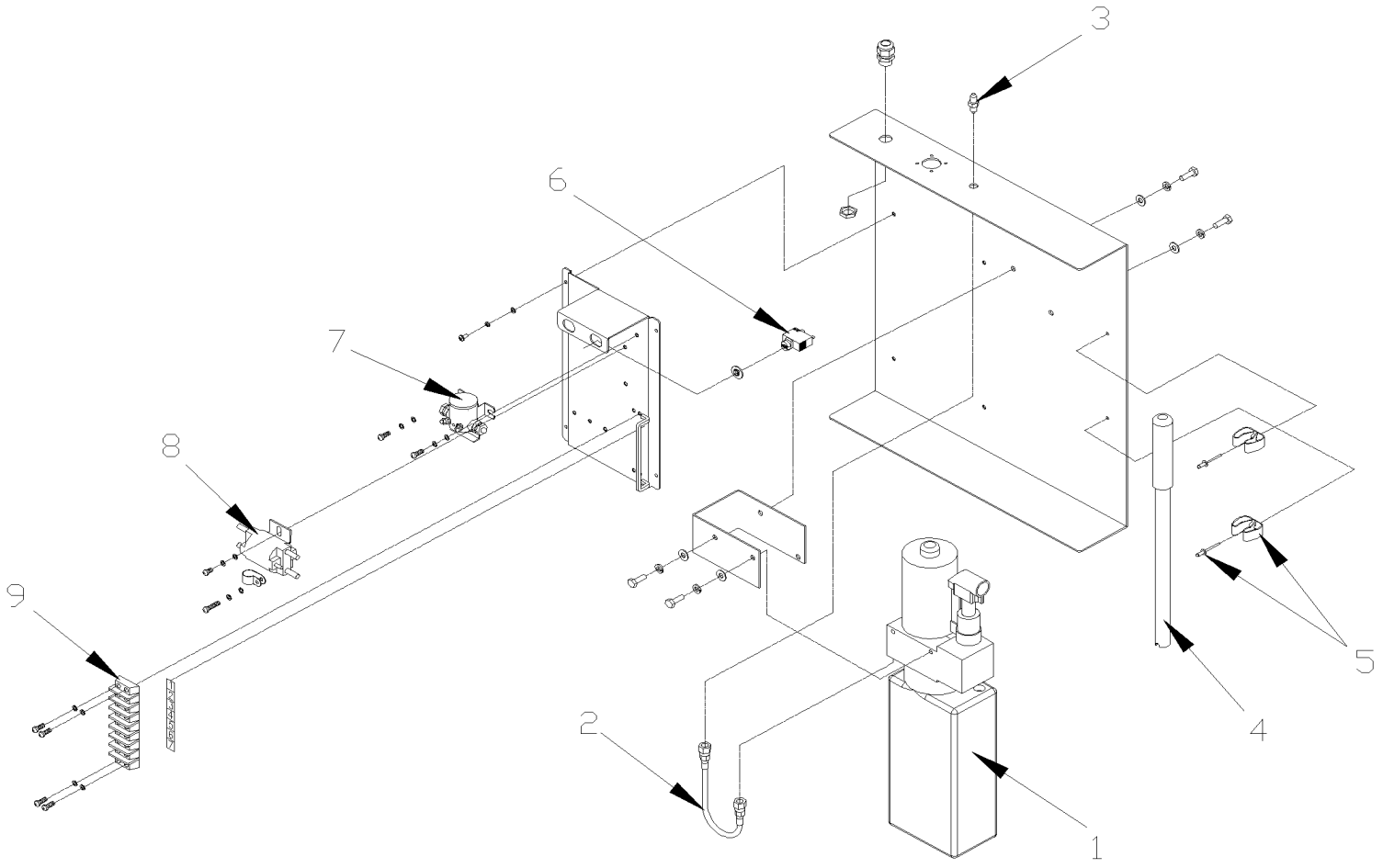

From 1-7681 To 4-8278		Date:07/2024	PAGE:Y2-2380-61

W.C.L. "RICON" - PUMP INSTALLATION MODEL "HC-L002"

Item#	Part	Description	XLII 45	XLII MTH40	XLII MTH45	XLII MTH45E	NOTES
1	**Y2-2380-65**	**W.C.L. "RICON" - PUMP ASSY**					
2	Call order desk	HOSE-ASSY / 11"x 1/4JIC x1/4JIC	1				P
3	Call order desk	HYDRAULIC FITTING / PUMP BOX	1				P
4	19502884	HANDLE-MANUAL BACKUP PUMP	1				
5	19509865	KIT TOOL CLIP / W/RIVET	2				
6	862103	CIRCUIT BREAKER / 30AMPS	1				
7	862100	SOLENOID / SP 24V	1				
8	862101	SOLENOID-24V DP LARGE	1				
9	863088	KIT, TERMINAL STRIP	1				
		P) CALL ORDER DESK FOR SPECIFIC APPLICATION (V.I.N.)					

From 4-8279 To 6-8906		Date:07/2024	PAGE:Y2-2380-62
W.C.L. "RICON" - PUMP INSTALLATION MODEL "F9T" & "F9TF"			

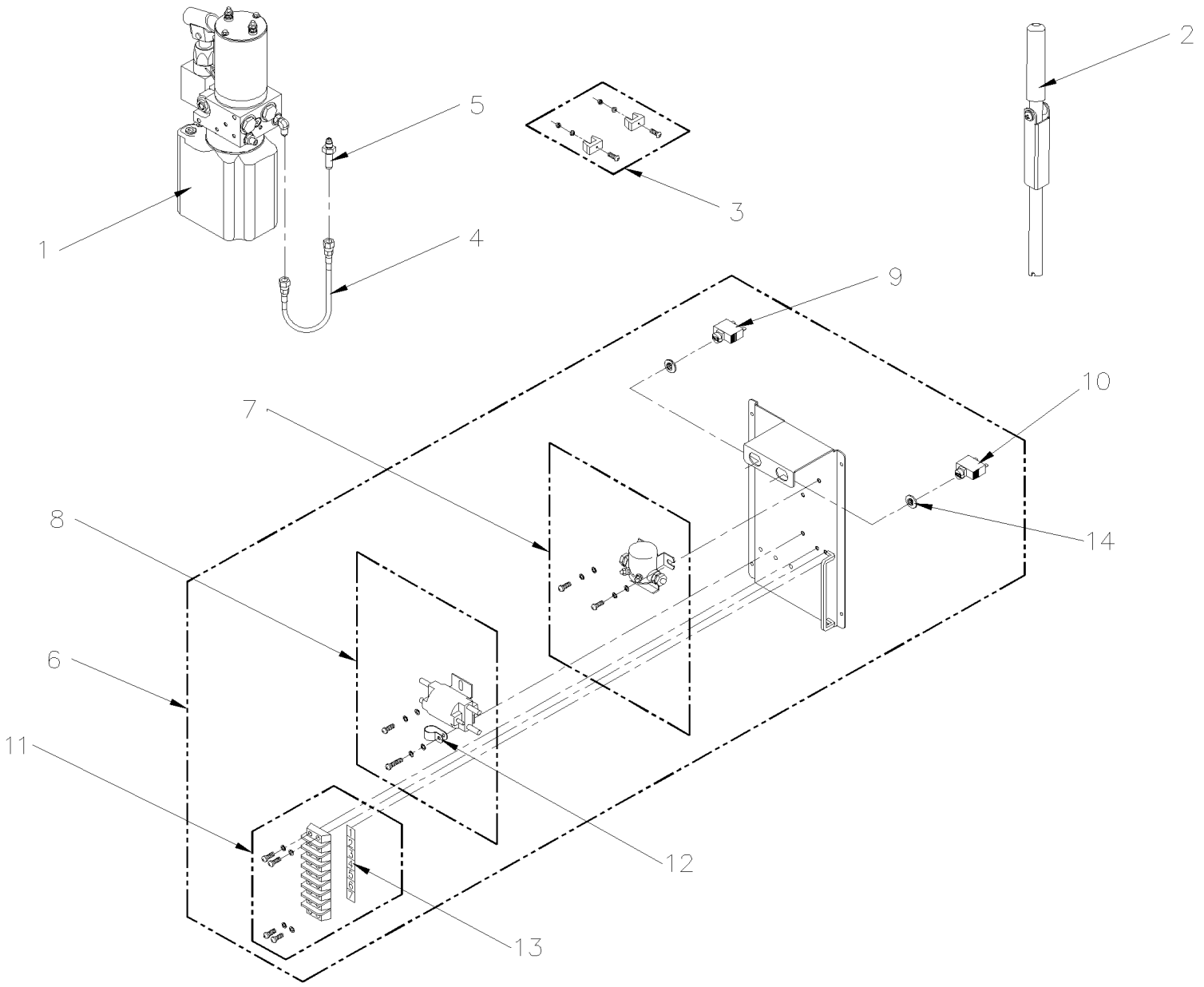

From 4-8279 To 6-8906		Date:07/2024	PAGE:Y2-2380-62

W.C.L. "RICON" - PUMP INSTALLATION MODEL "F9T" & "F9TF"

Item#	Part	Description	XLII 45	XLII MTH40	XLII MTH45	XLII MTH45E	NOTES
1	**Y2-2380-65**	**W.C.L. "RICON" - PUMP ASSY**					
2	464678	HANDLE-MANUAL BACKUP PUMP	1				
3	868251	TOOL CLIP	1				
4	863085	HOSE ASSY 13 3/4"	1				
5	863086	FITTING, BUN, 1/4J, 2.08L	1				
6	863087	KIT, SOLENOID PLATE ASSY, 24VDC	1				
7	862100	SOLENOID / SP 24V	1				
8	862101	SOLENOID-24V DP LARGE	1				
9	862102	CIRCUIT BREAKER / 8AMP	1				
10	862103	CIRCUIT BREAKER / 30AMPS	1				
11	863088	KIT, TERMINAL STRIP	1				
12	863089	CLAMP, NYLON, 3/8” BLACK	1				
13	863090	DECAL "TERMINAL STRIP NUMBERS"	1				
14	863091	ADAPTOR .625 D-HOLE	1				

From Y-7046 To 6-8906		Date:07/2024	PAGE:Y2-2380-65
W.C.L. "RICON" - PUMP ASSY			

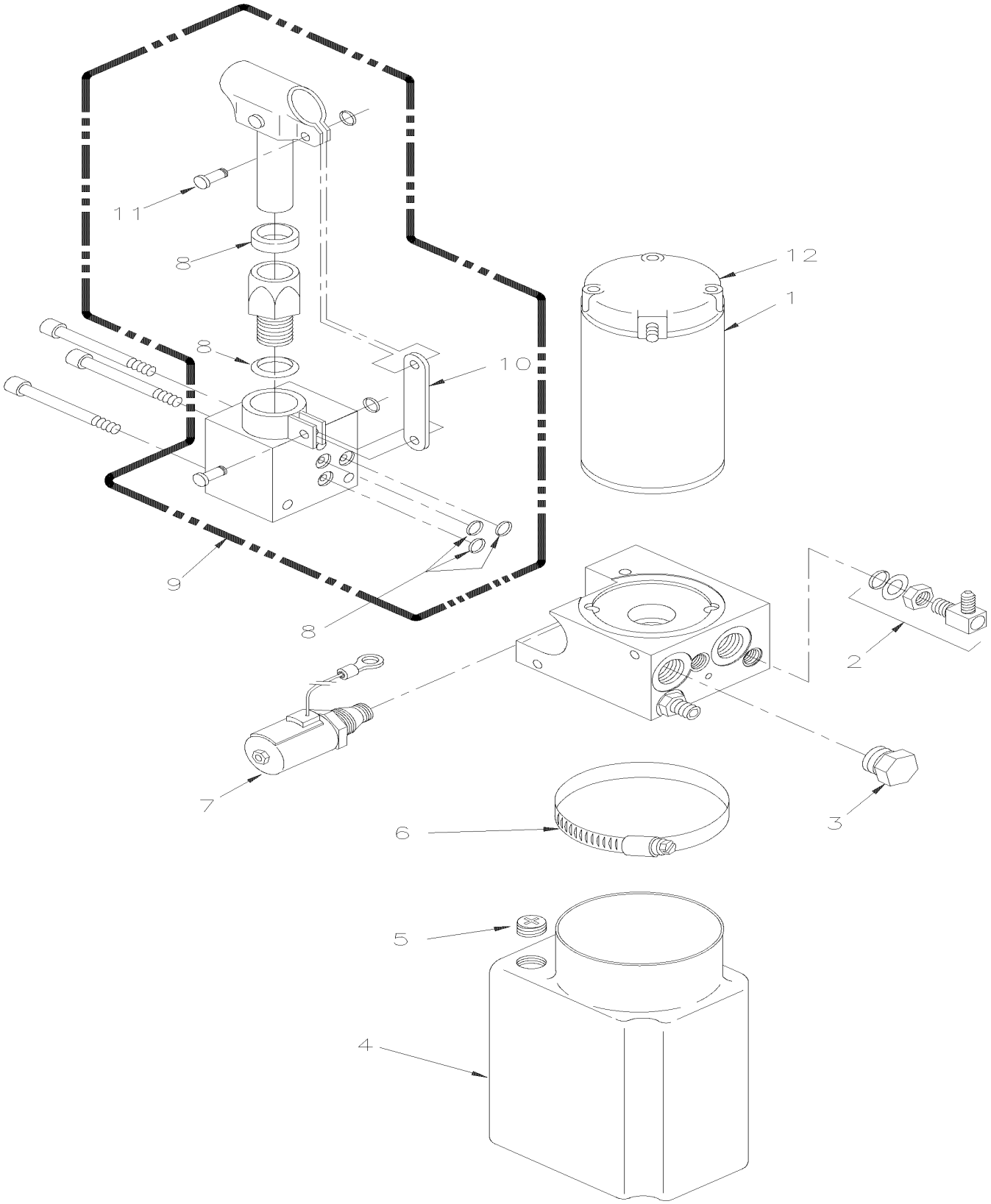

From Y-7046 To 6-8906		Date:07/2024	PAGE:Y2-2380-65

W.C.L. "RICON" - PUMP ASSY

Item#	Part	Description	XLII 45	XLII MTH40	XLII MTH45	XLII MTH45E	NOTES
	192298	PUMP ASSY 2.0 KPSI / 24V To 1-7680	1				
	860118	PUMP ASSY 1.8 KPSI / 24V / W/LARGE RESERVOIR From 1-7681 To 4-8278	1				
	863112	PUMP ASSY 2.0 KPSI / 24V From 4-8279 To 5-8605	1				
	863112	PUMP ASSY 2.0 KPSI / 24V From 5-8606	1				
1	N.S.S.	. MOTOR ASSY. / 24V 3" MONARCCH PUMP	1				1
2	868147	. FITTING / "L" 1/4 SAE O-RING BOSS 1/4 JIC	1				
3	860122	. PLUG / 3/4-16 CAVITY / W/O-RING	2				
4	862105	. RESERVOIR / RICON POWER UNIT / PLASTIC To 1-7680	1				
4	N.P.N.	. RESERVOIR / RICON POWER UNIT / PLASTIC From 1-7681 To 4-8278	1				4
4	863092	. RESERVOIR / RICON POWER UNIT / PLASTIC From 4-8279	1				
5	863095	. PLUG, BREATHER, RESERVOIR	1				
6	504235	. HOSE CLAMP / 3"9/16"-4"1/2 SS / HS-64	1				
7	862106	. HYD. POPPET VALVE ASSY. / 24V DELTROL To 1-7680	1				
7	860153	. KIT DOWN VALVE / W/TERMINALS From 1-7681	1				
8	862107	. SEAL KIT / MANUAL BACK-UP PUMP	1				
9	863093	. BACK-UP PUMP ASSY, MANUAL W/O HANDLE	1				
10	868253	. BRACKET / TENSION LINK / MANARCH PUMP	1				
11	868254	. PIN & RETAINING RING-BACKUP PUMP	2				
12	862108	. KIT / PUMP MOTOR BRUSH SET	1				
NS	685682	OIL HYDRAULIC W.C.L. (19 LITERS)	1				
		1) NOT SOLD SEPARATELY					
		4) NO PARTS NUMBER					

From 1-7681 To 4-8278		Date:07/2024	PAGE:Y2-2380-70
W.C.L. "RICON" - RELEASE HANDLE MODEL "HC-L002"			

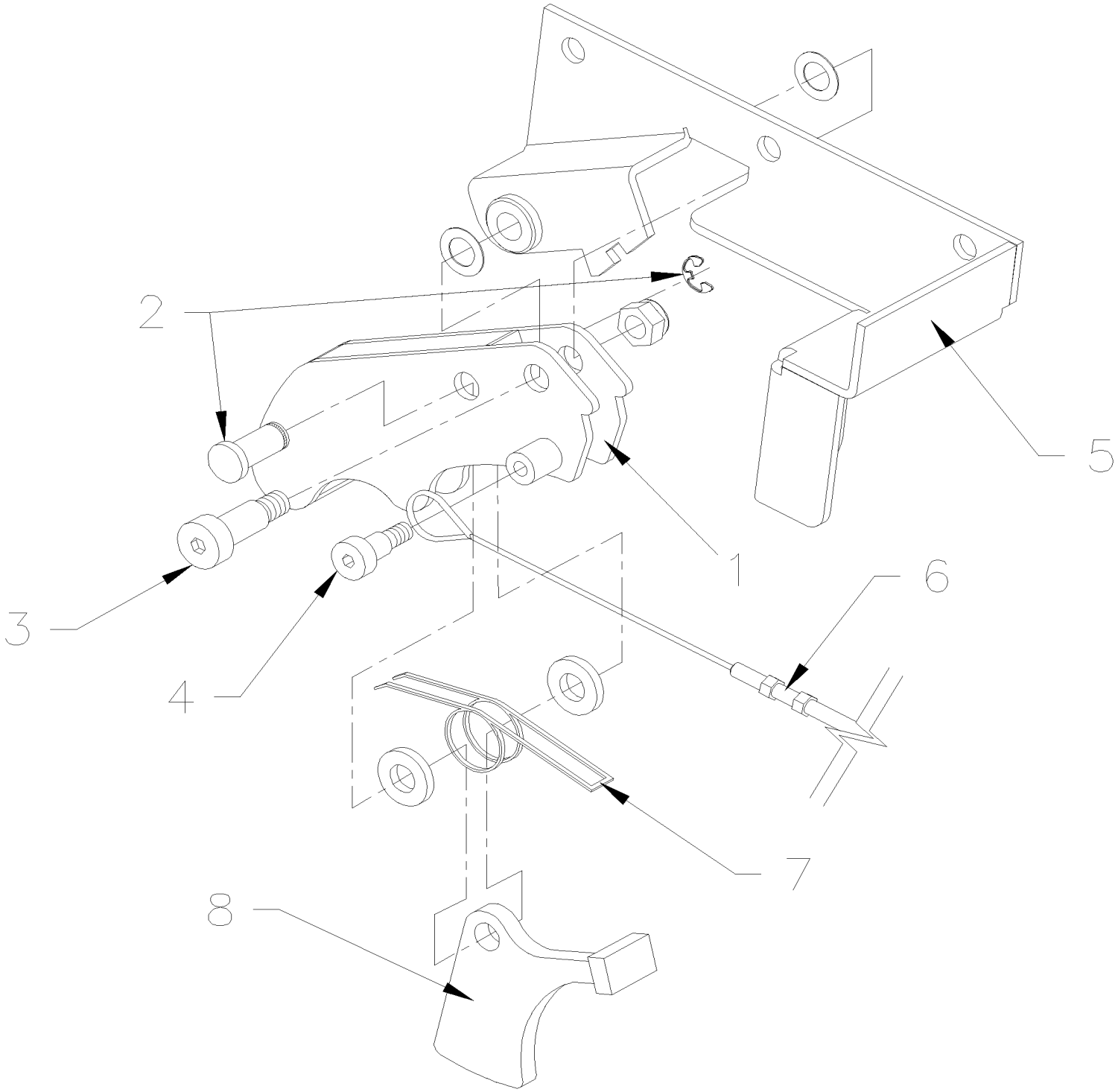

From 1-7681 To 4-8278		Date:07/2024	PAGE:Y2-2380-70

W.C.L. "RICON" - RELEASE HANDLE MODEL "HC-L002"

Item#	Part	Description	XLII 45	XLII MTH40	XLII MTH45	XLII MTH45E	NOTES
1	Call order desk	HANDLE, CARRIAGE RELEASE, HC-L002	1				P
2	Call order desk	KIT, PIVOT PIN, TRIGGER	1				P
3	Call order desk	SCREW SHR HEXS 10x20{M8-1.25	1				P
4	Call order desk	SCREW SHR HEXS 8x10{M6-1.0	1				P
5	Call order desk	BRACKET, CARRIAGE RELEASE	1				P
6	Call order desk	CABLE ASSY, CARRIAGE RELEASE	1				P
7	Call order desk	SPRING, TORSION, TRIGGER	1				P
8	Call order desk	TRIGGER, CARRIAGE RELEASE	1				P
		P) CALL ORDER DESK FOR SPECIFIC APPLICATION (V.I.N.)					

From Y-7046 To 6-8805		Date:07/2024	PAGE:Y2-2390-00
"SLIDE-OUT" INFLATED SEAL & LOCKING PIN			

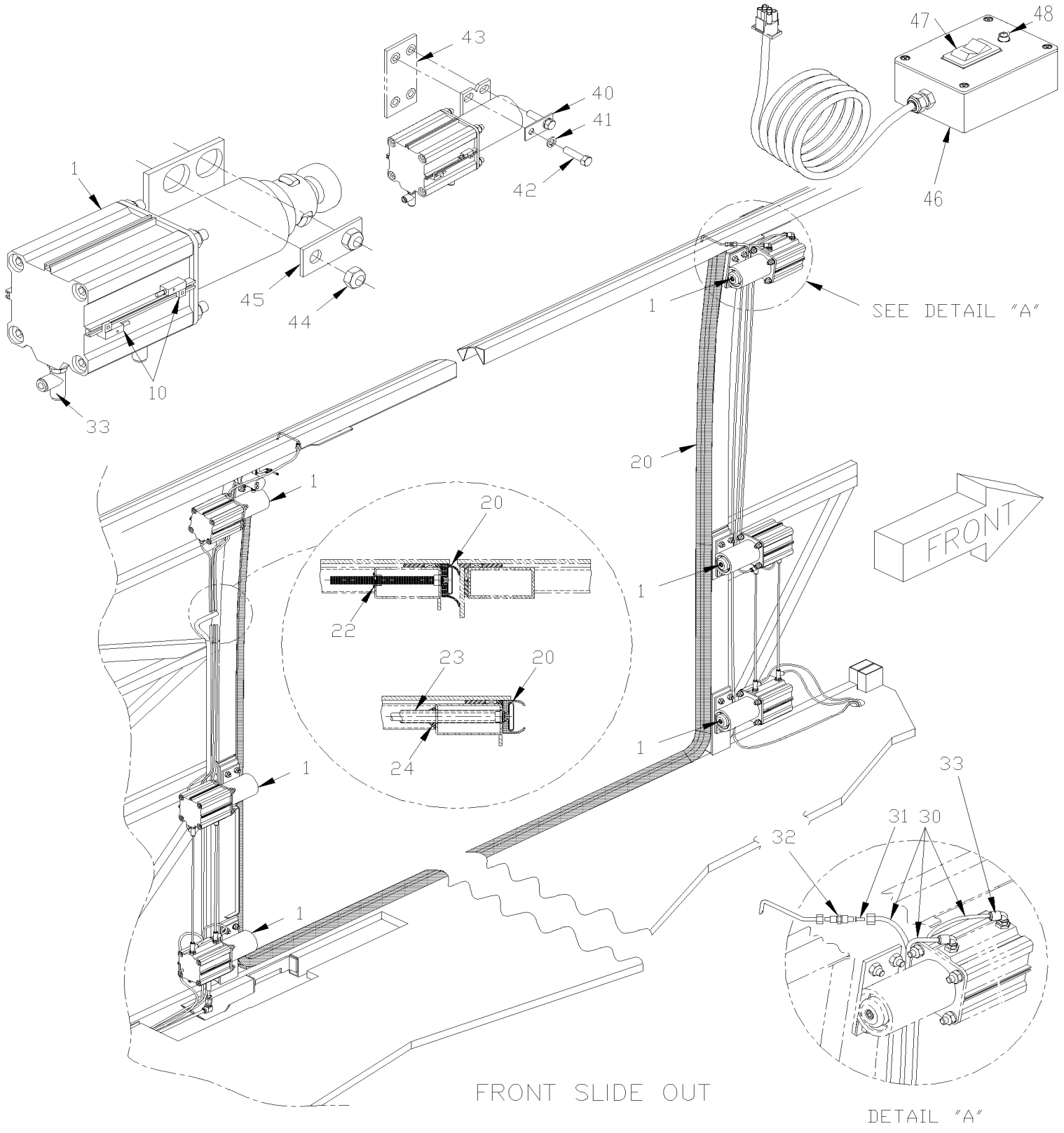

From Y-7046 To 6-8805		Date:07/2024	PAGE:Y2-2390-00
"SLIDE-OUT" INFLATED SEAL & LOCKING PIN			

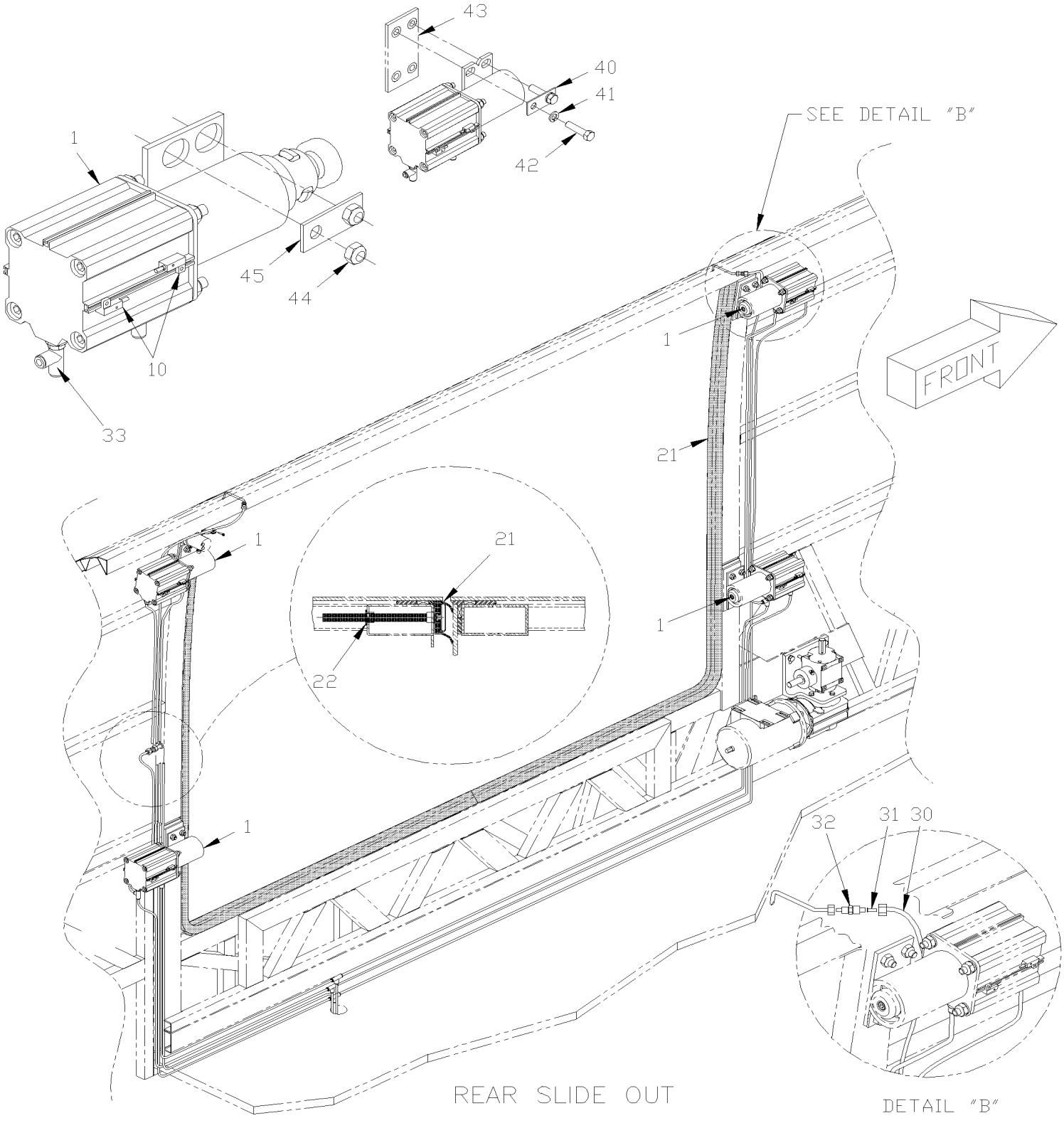

From Y-7046 To 6-8805		Date:07/2024	PAGE:Y2-2390-00

"SLIDE-OUT" INFLATED SEAL & LOCKING PIN

Item#	Part	Description	XLII 45	XLII MTH40	XLII MTH45	XLII MTH45E	NOTES
1	**Y2-2390-70**	**"SLIDE-OUT" - CYLINDER LOCK PIN ASSY**					
10	690407	LIMIT SWITCH ASSY W/CONNECTOR To 4-8251			2		
. NS	690342	. LIMIT SWITCH W/WIRE To 4-8251			1		
. NS	690308	. CONNECTOR / MINI UNIVERSAL MATE-N-LOK / SH 4C / AMP 172167-1 To 4-8251			1		
10	065846	LIMIT SWITCH ASSY W/CONNECTOR From 4-8252			2		
10	563345	LIMIT SWITCH W/WIRE From 4-8252			1		
20	690228	SEAL, INFLATABLE FRONT / "XL" 4465MM x 2039MM / 1500MM To 4-8251			1		
20	476322	SEAL, INFLATABLE FRONT / "XL" 4465MM x 2039MM / 1500MM From 4-8252			1		
20	479433	SEAL INSTALLATION / FRONT / "XL" 4465MM x 2039MM			1		
. NS	4705185	. SEAL, INFLATABLE FRONT / 4465MM x 2039MM			1		
. NS	470967	. BASE SEAL / FRONT 4465MM x 2039MM			1		
. NS	IS-16080	. SEE INSTRUCTION SHEET			1		
. NS	FI-16080	. VOIR FEUILLE D'INSTRUCTION			1		
21	690229	SEAL, INFLATABLE REAR 2330MM x 1673MM / 763MM To 4-8251			1		
21	476321	SEAL, INFLATABLE REAR 2330MM x 1673MM / 763MM From 4-8252			1		
21	479435	SEAL INSTALLATION / REAR 2330MM x 1673MM			1		
. NS	4705183	. SEAL, INFLATABLE / REAR 2330MM x 1673MM			1		
. NS	470961	. BASE SEAL / REAR 2330MM x 1673MM			1		
. NS	IS-16080	. SEE INSTRUCTION SHEET			1		
. NS	FI-16080	. VOIR FEUILLE D'INSTRUCTION			1		
NS	690323	BRASS INSERT TUBE 5/16 I.D.			AR		
NS	690321	BRASS INSERT TUBE 3/8 I.D.			AR		
22	507260	BUSHING NYLINER W/SHOULDER .375x.437x.375x.594			2		
23	503540	TUBE, NYLON 5/8 O.D. / BLACK S.L.			AR		
24	682176	SEALANT SIKA #221 / BLACK / 310ml CARTRIDGE			AR		
NS	690341	GLUE PRISM 426 BLACK GEL			AR		
NS	690354	PRIMER 770			AR		
30	503402	TUBE, NYLON 1/4 O.D. / BLACK S.L.			AR		
31	690324	INSERT / COMPRESS-ALIGN FITTING / #4x.040 BR To 4-8251			AR		
31	642012	INSERT / COMPRESS-ALIGN FITTING / #4x.040 BR From 4-8252			AR		
32	690322	UNION REDUCER / COMPRESS-ALIGN FITTING / #4x#3 BR To 4-8251			AR		
32	642011	UNION REDUCER / COMPRESS-ALIGN FITTING / #4x#3 BR From 4-8252			AR		
33	**Y2-2390-70**	**"SLIDE-OUT" - CYLINDER LOCK PIN ASSY**					
40	690225	PLATE			AR		
41	690264	WASHER LO SPT 12.2x21.1x2.5 ZP			AR		
42	5001043	SCREW CAP HEX M12-1.75x50 G8.8 Z050			AR		
43	690263	NUT RIV FL OKS OE ZP M12-1.75			AR		
44	502617	NUT HEX NYRT M10-1.5 Z050			AR		
45	690125	PLATE To 4-8251			1		
45	144623	PLATE From 4-8252			1		
NS	144636	SPACER 0.015"			AR		
NS	144637	SPACER 0.031"			AR		

From Y-7046 To 6-8805		Date:07/2024	PAGE:Y2-2390-00

"SLIDE-OUT" INFLATED SEAL & LOCKING PIN

Item#	Part	Description	XLII 45	XLII MTH40	XLII MTH45	XLII MTH45E	NOTES
NS	144638	SPACER 0.062"			AR		
NS	144639	SPACER 0.125"			AR		
NS	144640	SPACER 0,187"			AR		
NS	144641	SPACER 0,250"			AR		
46	382048	REMOTE CONTROL / SINGLE SLIDE-OUT			1		
. NS	563380	. SWITCH / M/ON-OFF-M/ON S P.D.T BLACK			1		
. NS	564421	. PILOT LIGHT GREEN / LED 24V			1		
. NS	382047	. DECAL "REMOTE CONTROL"			1		
46	382047	. DECAL "REMOTE CONTROL"			1		
47	563380	. SWITCH / M/ON-OFF-M/ON S P.D.T BLACK			1		
48	563379	. PILOT LIGHT GREEN / 28 VOLTS			1		
49	470960	. SEAL, INFLATABLE / REAR 2330MM x 1673MM	1	1	1	1	

From 6-8806 To 8-9339		Date:07/2024	PAGE:Y2-2390-01
"SLIDE-OUT" INFLATED SEAL			

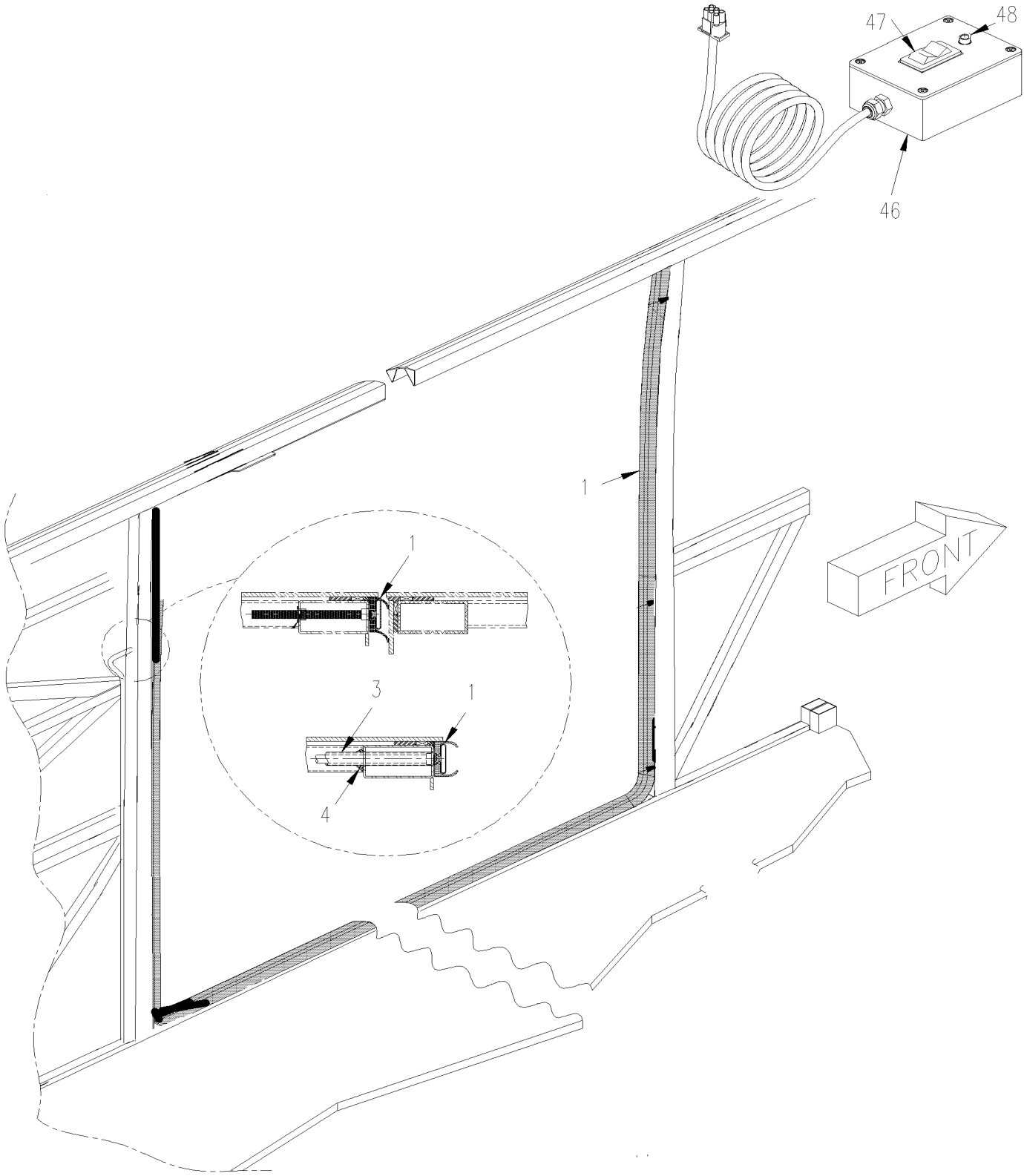

From 6-8806 To 8-9339		Date:07/2024	PAGE:Y2-2390-01
"SLIDE-OUT" INFLATED SEAL			

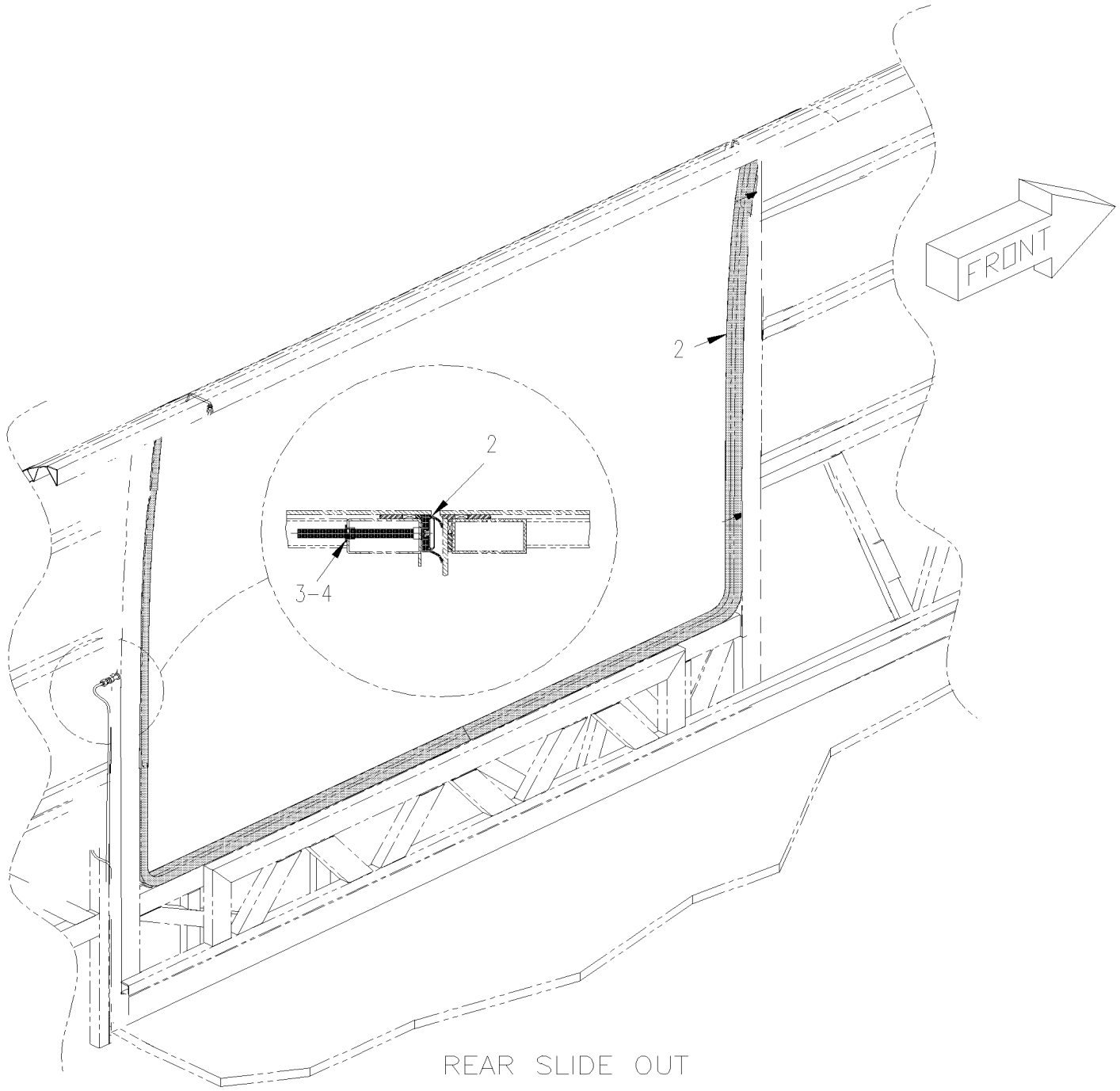

From 6-8806 To 8-9339		Date:07/2024	PAGE:Y2-2390-01

"SLIDE-OUT" INFLATED SEAL

Item#	Part	Description	XLII 45	XLII MTH40	XLII MTH45	XLII MTH45E	NOTES
1	478147	SEAL, INFLATABLE FRONT / "XL II" 4465MM x 2039MM / 175MM			1		
1	479439	SEAL INSTALLATION FRONT / "XL II" 4465MM x 2039MM			1		
. NS	470965	. SEAL, BASE FRONT / "XL II" 4465MM x 2039MM			1		
. NS	4705185	. SEAL, INFLATABLE FRONT / 4465MM x 2039MM			1		
. NS	IS-16080	. SEE INSTRUCTION SHEET			1		
. NS	FI-16080	. VOIR FEUILLE D'INSTRUCTION			1		
1	478149	SEAL, INFLATABLE FRONT / 3591MM x 2115MM / 175MM				1	
1	479430	SEAL INSTALLATION FRONT / 3591MM x 2115MM				1	
. NS	470666	. SEAL, BASE FRONT / 3591MM x 2115MM				1	
. NS	4705181	. SEAL, INFLATABLE FRONT / 3591MM x 2115MM				1	
. NS	IS-16080	. SEE INSTRUCTION SHEET				1	
. NS	FI-16080	. VOIR FEUILLE D'INSTRUCTION				1	
2	478148	SEAL, INFLATABLE REAR / W/7.5' 2330MM x 1648MM / 175MM			1		
2	479437	SEAL INSTALLATION REAR / W/7.5' 2330MM x 1648MM			1		
. NS	470962	. SEAL, BASE REAR / W/7.5' 2330MM x 1648MM			1		
. NS	4705184	. SEAL, INFLATABLE REAR / W/7.5' 2330MM x 1648MM			1		
. NS	IS-16080	. SEE INSTRUCTION SHEET			1		
. NS	FI-16080	. VOIR FEUILLE D'INSTRUCTION			1		
3	503541	TUBE, NYLON 3/4" O.D. / BLACK S.L			AR	AR	
3	504715	HOSE CLAMP / 7/32"-5/8" SS			1	1	
NS	642010	FEMALE CONNECTOR / HOSE BARB FITTING / #4x1/4NPT-F BR			AR	AR	
NS	641331	MALE CONNECTOR / PUSH-IN FITTING / #6x1/4NPT-M BR			AR	AR	
3	509815	TIE MOUNT / ATTACHMENT W/TREE MOUNT			AR	AR	
3	562679	4 WAY ADH. BACKED MOUNTS 1.000 x 1.000 x .160			AR	AR	
3	504637	CABLE TIE / 3/16" x 13"			AR	AR	
3	504720	GROMMET / 2.375x3.000x.250x.437x3.250			1	1	
4	684517	ADHESIVE SIMSON #ISR 70-03 / GREY / 310ml CARTRIDGE			AR	AR	
10	382048	REMOTE CONTROL / SINGLE SLIDE-OUT			1	1	
. NS	563380	. SWITCH / M/ON-OFF-M/ON S P.D.T BLACK			1	1	
. NS	564421	. PILOT LIGHT GREEN / LED 24V			1	1	
. NS	382047	. DECAL "REMOTE CONTROL"			1	1	

From Y-7046 To 6-8805		Date:07/2024	PAGE:Y2-2390-05
"SLIDE-OUT" CONTROL INSTALLATION			

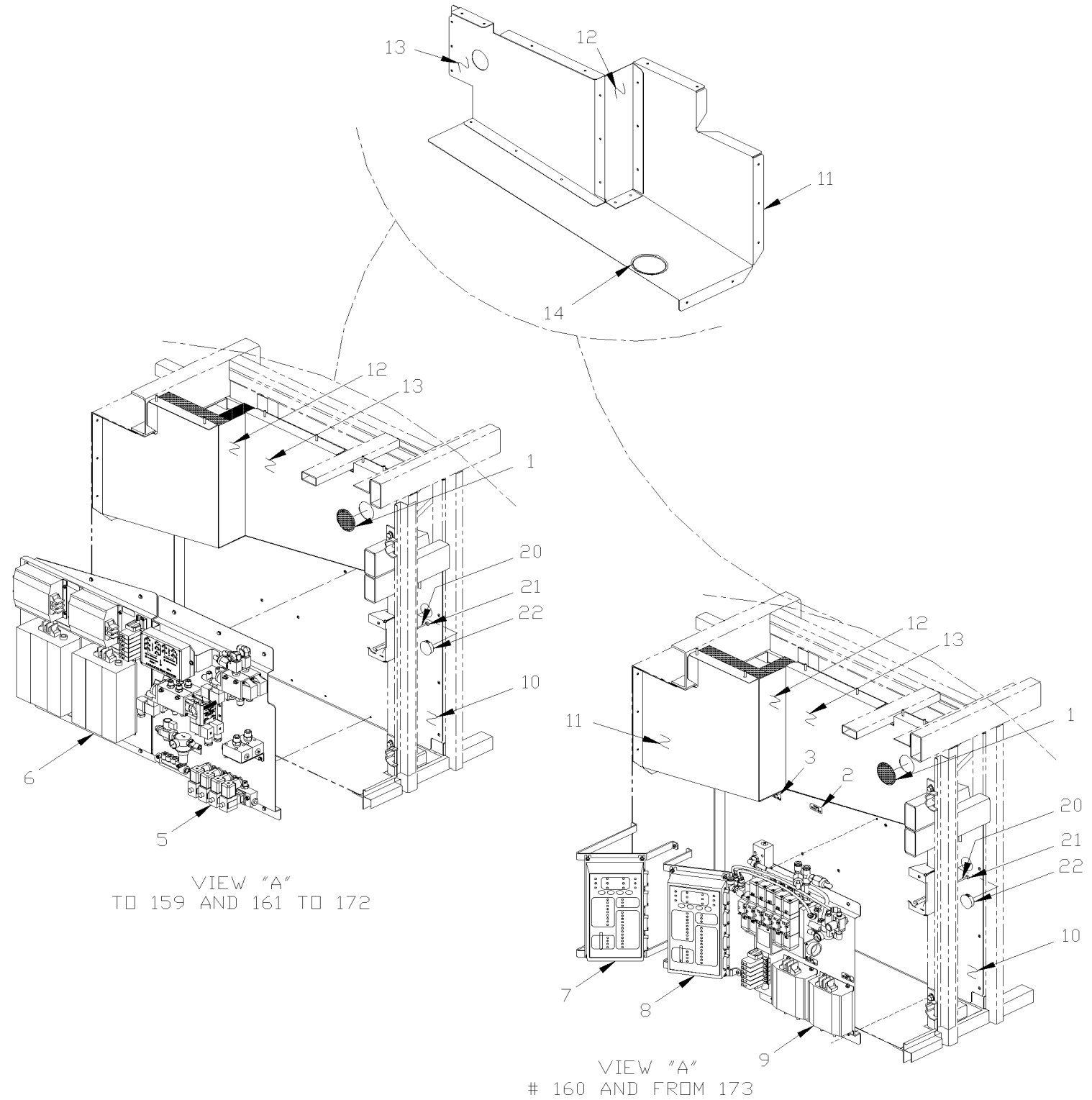

From Y-7046 To 6-8805		Date:07/2024	PAGE:Y2-2390-05

"SLIDE-OUT" CONTROL INSTALLATION

Item#	Part	Description	XLII 45	XLII MTH40	XLII MTH45	XLII MTH45E	NOTES
1	690286	PLUG SNAP-IN 1 PLAS 2 1/8" X 0.05" EP.			1		
2	690096	DECAL "FRONT SLIDE OUT" To 4-8251			1		
2	065921	DECAL "FRONT SLIDE OUT" From 4-8252			1		
3	690097	DECAL "REAR SLIDE OUT" STICKER To 4-8251			1		
3	065922	DECAL "REAR SLIDE OUT" STICKER From 4-8252			1		
5	**Y2-2390-10**	**"SLIDE-OUT" AIR CONTROL PANEL To 2-7780**					
6	**Y2-2390-06**	**"SLIDE-OUT" CONTROL PANEL - INSTALLATION To 2-7780**					
7	065907	SUPPORT / PRAN MODULE			1		
7	065908	SUPPORT / PRAN MODULE			1		A
8	065906	SUPPORT / PRAN MODULE			1		
8	065908	SUPPORT / PRAN MODULE			1		A
9	**Y2-2390-11**	**"SLIDE-OUT" AIR CONTROL PANEL From 2-7881**					
10	Call order desk	PANEL			1		P
11	Call order desk	PANEL			1		P
12	Call order desk	PANEL			1		P
13	Call order desk	PANEL			1		P
14	506338	RUBBER CHANNEL / 1/16" x 1/4" INT "U" SHAPE / ROUND C.T.L.			1		
20	Call order desk	ROD OPENING 243MM			1		P
21	690288	RUBBER GROMMET 5/16"			1		
22	504265	PLUG 1 3/8"			1		
		A) WITH SMALL A/C SYSTEM					
		P) CALL ORDER DESK FOR SPECIFIC APPLICATION (V.I.N.)					

From Y-7046 To 2-7780		Date:07/2024	PAGE:Y2-2390-06
"SLIDE-OUT" CONTROL PANEL - INSTALLATION			

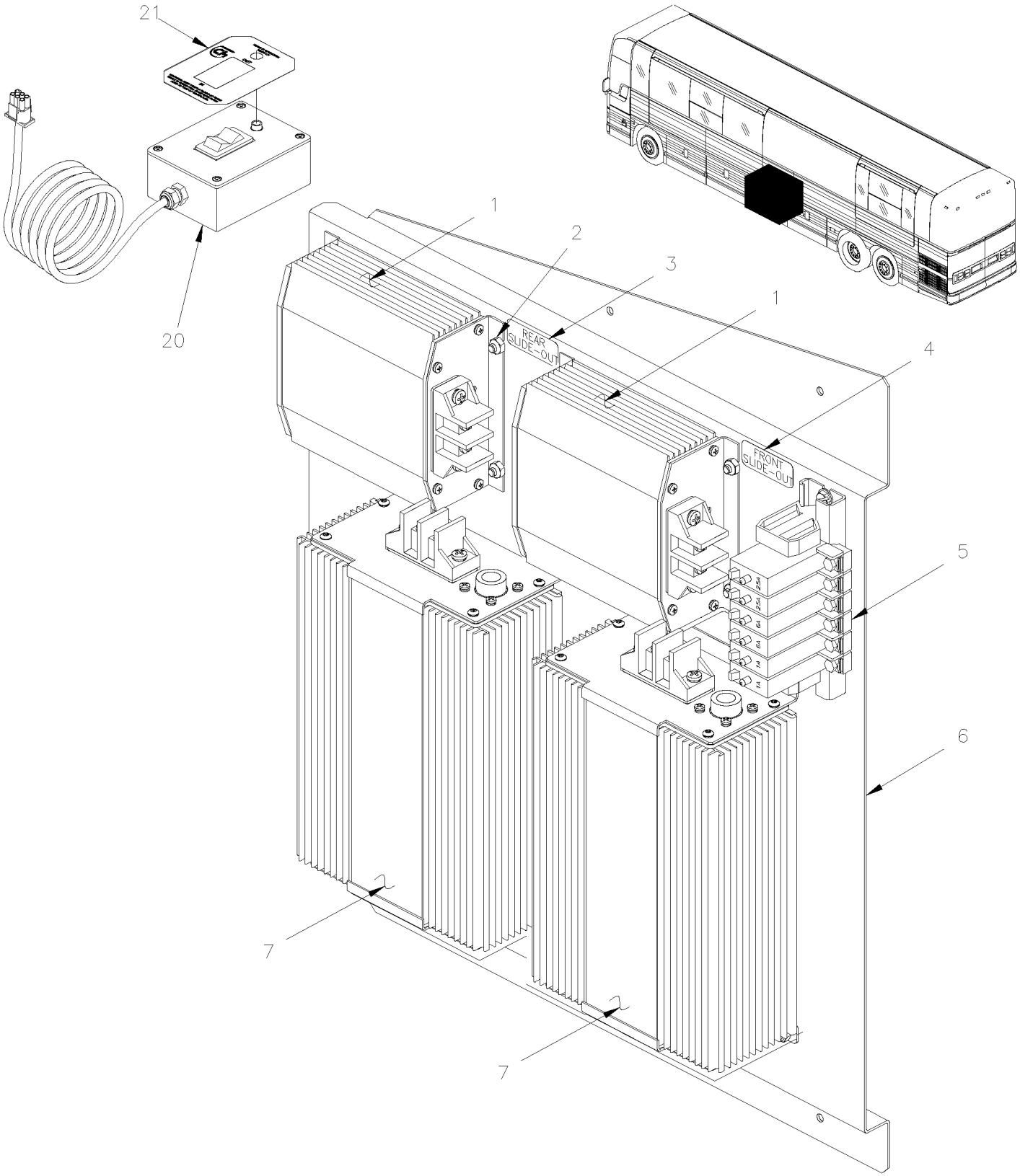

From Y-7046 To 2-7780		Date:07/2024	PAGE:Y2-2390-06

"SLIDE-OUT" CONTROL PANEL - INSTALLATION

Item#	Part	Description	XLII 45	XLII MTH40	XLII MTH45	XLII MTH45E	NOTES
	690065	ELECTRIC COMPONENTS PANEL			1		
1	690303	. MODULE MOTOR DRIVE ASM 24V To Y-7398			2		A
1	563318	. MODULE MOTOR DRIVE ASM 24V From Y-7399			2		
2	502782	. NUT HEX NYRT M5-0.8 Z050			16		
3	690097	. DECAL "REAR SLIDE OUT" STICKER To 4-8251			1		
3	065922	. DECAL "REAR SLIDE OUT" STICKER From 4-8252			1		
4	690096	. DECAL "FRONT SLIDE OUT" To 4-8251			1		
4	065921	. DECAL "FRONT SLIDE OUT" From 4-8252			1		
5	**Y2-0616-00**	**. JUNCTION BOX COMPONENTS, RELAY & BREAKER**					
6	690062	. ELECTRIC COMPONENTS PANELS			1		
7	690304	. SLIDE OUT CONTROL MODUL			2		
7	**0610320**	**FRONT SLIDE-OUT MODULE REPLACEMENT KIT**			1		
7	**0610321**	**REAR SLIDE-OUT MODULE REPLACEMENT KIT**			1		
20	690087	REMOTE CONTROL / SINGLE SLIDE-OUT To 1-7439			AR		
20	382048	REMOTE CONTROL / SINGLE SLIDE-OUT From 1-7450			AR		
. NS	563380	. SWITCH / M/ON-OFF-M/ON S P.D.T BLACK From 1-7450			1		
. NS	564421	. PILOT LIGHT GREEN / LED 24V From 1-7450			1		
. NS	382047	. DECAL "REMOTE CONTROL" From 1-7450			1		
21	690091	. DECAL "REMOTE CONTROL" To 4-8251			1		
21	382047	. DECAL "REMOTE CONTROL" From 4-8252			1		
NS	690297	HARNESS DOUBLE XLII From 1-7450			1		
22	065730	KIT, RETROFIT SAFETY MODULE "SLIDE OUT" XLII To 1-7780			AR		
23	065731	KIT, RETROFIT SAFETY MODULE "SLIDE OUT" XLII From 1-7781			AR		
24	563222	SAFETY MODULE PR-4101			1		
		A) THIS MOTOR CONTROL MODULE IT SUPERSEEDED BY #563318 AND #563316 WITH KIT 065730					

From Y-7046 To 2-7780		Date:07/2024	PAGE:0610320
FRONT SLIDE-OUT MODULE REPLACEMENT KIT			

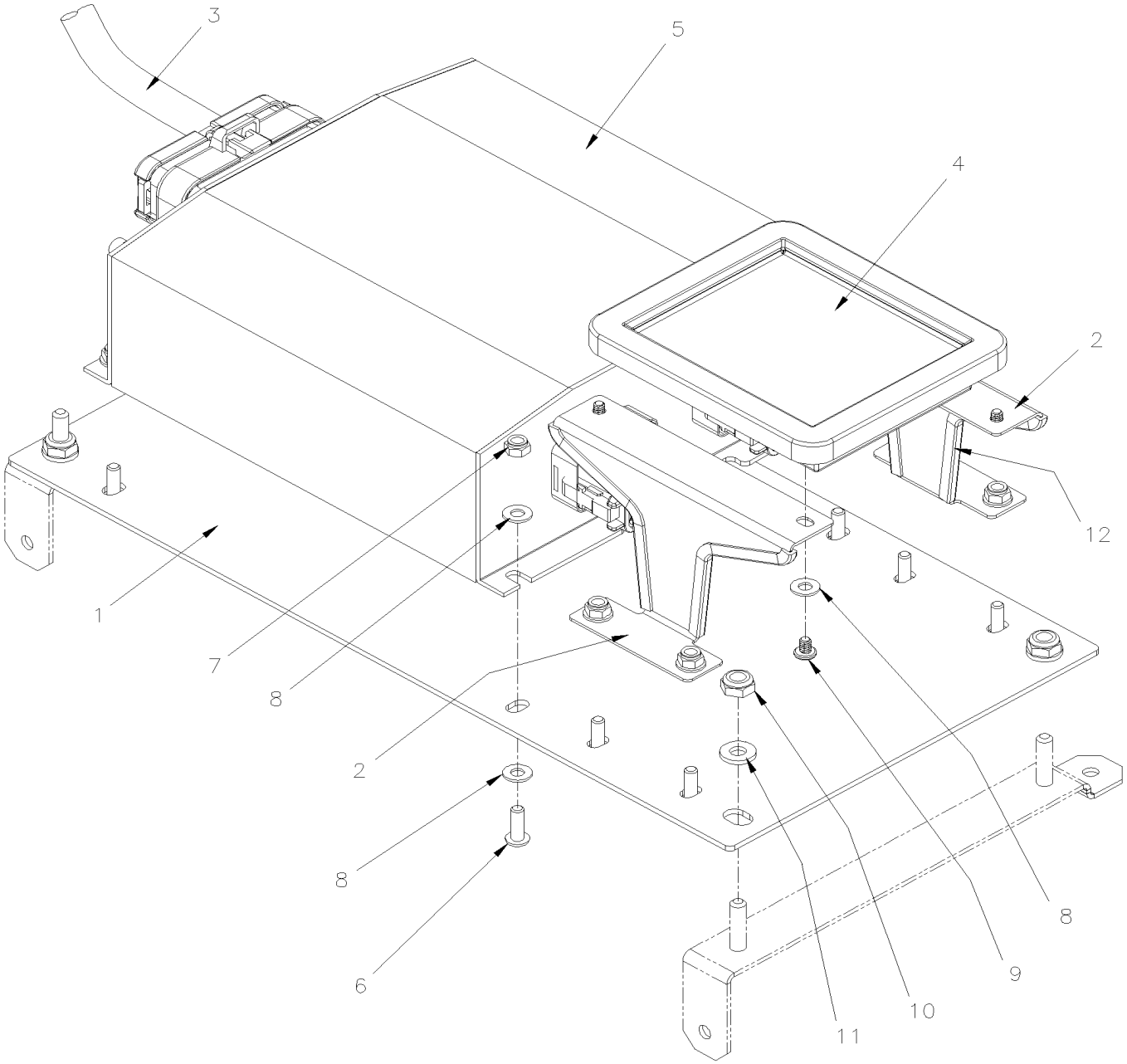

From Y-7046 To 2-7780		Date:07/2024	PAGE:0610320

FRONT SLIDE-OUT MODULE REPLACEMENT KIT

Item#	Part	Description	XLII 45	XLII MTH40	XLII MTH45	XLII MTH45E	NOTES
1	060575	BASE	1	1	1	1	
2	060579	KEYBOARD SUPPORT	2	2	2	2	
3	563923	WIRING FRONT SLIDE-OUT MODULE / GEN 1	1	1	1	1	
4	563924	KEYBOARD FRONT SLIDE-OUT MODULE / GEN 1	1	1	1	1	
5	563925	MODULE SLIDE-OUT / GEN 1	1	1	1	1	
NS	560558	WIRE INTERFACE PRAN J1939	1	1	1	1	
6	5001996	SCREW MA PAN PH M4-0.7x12 N500	10	10	10	10	
7	500539	NUT HEX NYRT M4-0.7 N500	10	10	10	10	
8	502556	WASHER FL 4.3x9.0x0.8 SS	24	24	24	24	
9	5000355	SCREW MA PAN PH #6-32x3/16 SS	4	4	4	4	
10	502841	NUT HEX NYRT M5-0.8 N500	4	4	4	4	
11	5001137	WASHER FL .203x.438x.050 SS	4	4	4	4	
12	5060120	GROMMET EDGING ADHESIVE .036-.062	AR	AR	AR	AR	
NS	505537	TAPE DUAL LOCK 2" X 50 YARD / BLACK SJ3551	AR	AR	AR	AR	
14	IS-16103	SEE INSTRUCTION SHEET	1	1	1	1	

From Y-7046 To 2-7780		Date:07/2024	PAGE:0610321
REAR SLIDE-OUT MODULE REPLACEMENT KIT			

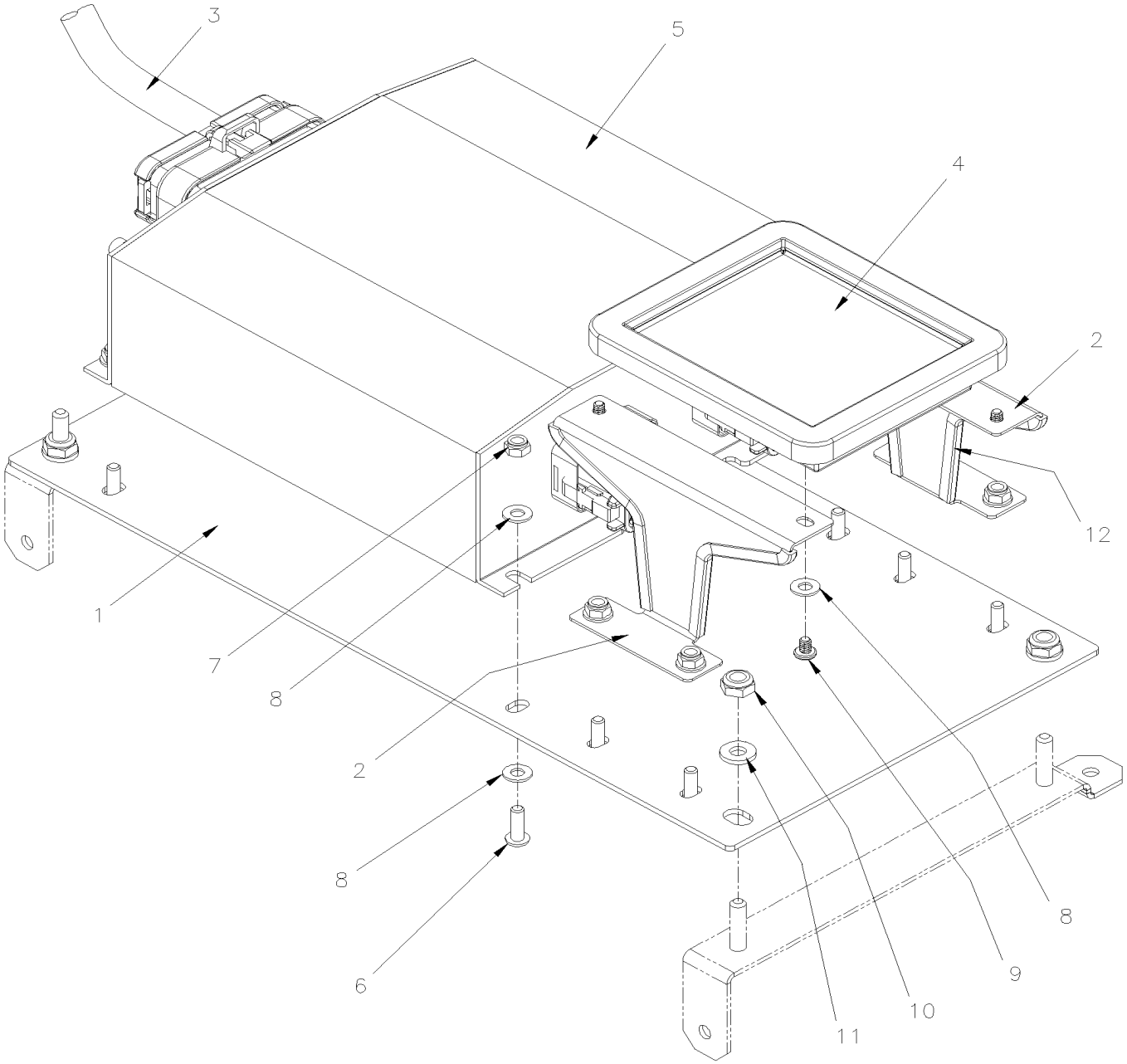

From Y-7046 To 2-7780		Date:07/2024	PAGE:0610321

REAR SLIDE-OUT MODULE REPLACEMENT KIT

Item#	Part	Description	XLII 45	XLII MTH40	XLII MTH45	XLII MTH45E	NOTES
1	060575	BASE	1	1	1	1	
2	060579	KEYBOARD SUPPORT	2	2	2	2	
3	563926	WIRING REAR SLIDE-OUT MODULE / GEN 1	1	1	1	1	
4	563927	KEYBOARD REAR SLIDE-OUT MODULE / GEN 1	1	1	1	1	
5	563925	MODULE SLIDE-OUT / GEN 1	1	1	1	1	
NS	560558	WIRE INTERFACE PRAN J1939	1	1	1	1	
6	5001996	SCREW MA PAN PH M4-0.7x12 N500	10	10	10	10	
7	500539	NUT HEX NYRT M4-0.7 N500	10	10	10	10	
8	502556	WASHER FL 4.3x9.0x0.8 SS	24	24	24	24	
9	5000355	SCREW MA PAN PH #6-32x3/16 SS	4	4	4	4	
10	502841	NUT HEX NYRT M5-0.8 N500	4	4	4	4	
11	5001137	WASHER FL .203x.438x.050 SS	4	4	4	4	
12	5060120	GROMMET EDGING ADHESIVE .036-.062	AR	AR	AR	AR	
NS	505537	TAPE DUAL LOCK 2" X 50 YARD / BLACK SJ3551	AR	AR	AR	AR	
NS	IS-16103	SEE INSTRUCTION SHEET	1	1	1	1	

From Y-7046 To 2-7780		Date:07/2024	PAGE:Y2-2390-10
"SLIDE-OUT" AIR CONTROL PANEL			

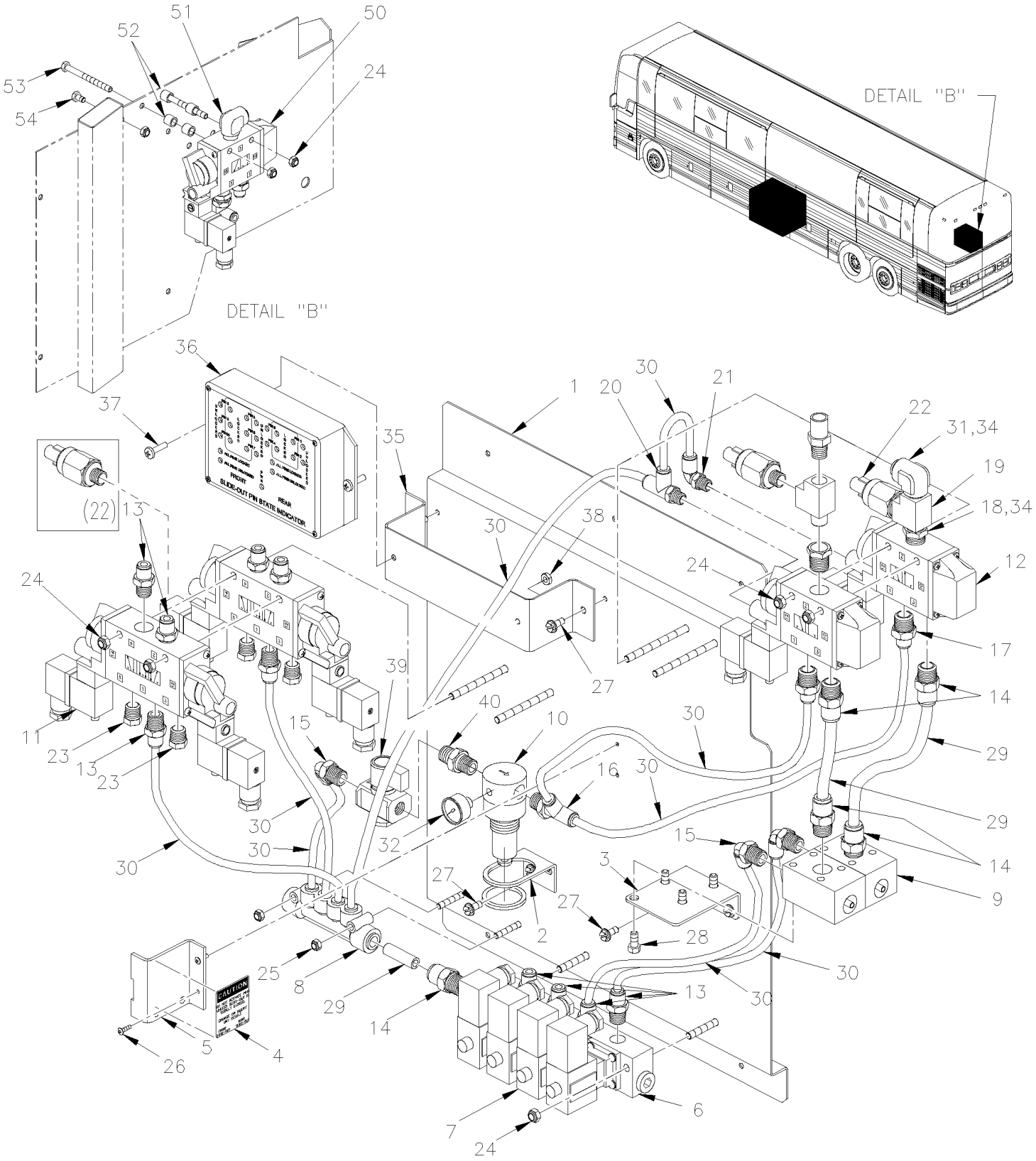

From Y-7046 To 2-7780		Date:07/2024	PAGE:Y2-2390-10

"SLIDE-OUT" AIR CONTROL PANEL

Item#	Part	Description	XLII 45	XLII MTH40	XLII MTH45	XLII MTH45E	NOTES
	690064	PNEUMATIC COMPONENTS PANEL			1		
1	690060	PNEUMATIC COMPONENTS PANEL			1		
2	690381	REGULATOR SEAT To TODAY			1		
2	N.S.P.	REGULATOR SEAT / (6500087) From FUTUR			1		2
3	690061	VACUUM GENERATOR SUPPORT			1		
4	690085	DECAL, LOCK SECURITY			1		
5	690069	PROTECTOR PLATE			1		
6	690349	4 PORTS VALVE MANIFOLD			1		
7	690350	SOLENOID VALVE 2/2 N.C.			4		
8	690330	MANIFOLD / PUSH-IN FITTING / 2x#6 / 4x#4 PLAS			1		
9	690344	VACUUM GENERATORS			2		
10	690380	PRESSURE REGULATOR To TODAY			1		
10	N.S.P.	PRESSURE REGULATOR / (6500085) From FUTUR			1		2
11	690332	VALVE, 5 WAYS, 3 POSITIONS / 2 SOLONOIDS			2		
. NS	641929	. COIL 24V			2		
. NS	641385	. CONNECTOR / SOCKET HOUSING ASSY 3C / PNEUMAC 54934-01			1		
12	690331	VALVE, 3 WAYS, 2 POSITIONS N.O.			2		
. NS	641929	. COIL 24V			1		
. NS	641169	. SPOOL			1		
. NS	641385	. CONNECTOR / SOCKET HOUSING ASSY 3C / PNEUMAC 54934-01			1		
13	641242	MALE CONNECTOR / PUSH-IN FITTING / #4x1/8NPT-M BR			10		
14	641330	MALE CONNECTOR / PUSH-IN FITTING / #6x3/8NPT-M BR			5		
15	690327	MALE ELBOW 90° SWIVEL / PUSH-IN FITTING / #4x1/4NPT-M BR			3		
16	690326	RUN TEE PUSH-IN 1/4 NPT SWIVEL - 1/4 TUBE			1		
17	641347	MALE CONNECTOR / PUSH-IN FITTING / #4x3/8NPT-M BR			2		
18	501314	BUSHING REDUCER / PIPE FITTING / 3/8NTP-Mx1/4NPT-F BR			2		
19	501338	MALE RUN TEE / PIPE FITTING / 1/4NPT-Mx1/4NPT-Fx1/4NPT-F BR			2		
20	690329	MALE RUN TEE SWIVEL / PUSH-IN FITTING / #4x#4x1/8NPT-M BR			1		
21	690328	MALE ELBOW 90° SWIVEL / PUSH-IN FITTING / #4x1/8NPT-M BR			1		
22	690361	VACUUM SWITCH 16" HG			2		
22	690411	PRESSURE SWITCH			AR		H
23	641926	SILENCER / MUFFLER / 1/4NPT-M			4		
23	N17945	SILENCER / MUFFLER / 1/4NPT-M			4		AS
24	502511	NUT HEX NYRT M6-1.0 Z050			6		
25	502782	NUT HEX NYRT M5-0.8 Z050			2		
26	504107	RIVET POP DOME OE 1/8x5/16 AL			2		
27	690275	SCR TP HEXW SLT ZP #12-16 X 1/2 LG.			4		
28	500162	SCREW CAP HEX 1/4-20x1/2 G5 Z050			4		
29	503404	TUBE, NYLON 3/8 O.D. / BLACK S.L.			1		
30	503402	TUBE, NYLON 1/4 O.D. / BLACK S.L.			1		
31	641372	MALE ELBOW 90° NON-SWIVEL / PUSH-IN FITTING / #6x1/4NPT-M BR			2		
32	690379	PRESSURE GAUGE 1/8 NPT To TODAY			1		

From Y-7046 To 2-7780		Date:07/2024	PAGE:Y2-2390-10

"SLIDE-OUT" AIR CONTROL PANEL

Item#	Part	Description	XLII 45	XLII MTH40	XLII MTH45	XLII MTH45E	NOTES
32	N.S.P.	PRESSURE GAUGE 1/8 NPT / (6500088) From FUTUR			1		2
33	690382	BRANCH TEE UNION PUSH-IN 1/4 TUBE			3		
34	680098	THREAD SEALANT LOCTITE #567 / WHITE / 250ml			AR		
35	690248	ELECTRONIC MODUL SUPPORT From 1-7450			1		
36	690298	PINS ELECTRONIC MODUL ASSY From 1-7450			1		
37	500387	SCREW MA RND PH #10-24x3/4 Z050 From 1-7450			2		
38	5001180	NUT HEX NYRT #10-24 SS From 1-7450			2		
39	690351	PORT RELIEVING SHUT-OFF VALVE From FUTUR			1		
40	501321	NIPPLE HEX / PIPE FITTING / 1/4NPT-Mx1/4NPT-Mx1 3/8 BR From FUTUR			1		
50	641937	VALVE, 3 WAYS, 2 POSITIONS N.C. / W/MAN OVERRIDE			1		
. NS	641929	. COIL 24V			1		
. NS	641385	. CONNECTOR / SOCKET HOUSING ASSY 3C / PNEUMAC 54934-01			1		
51	641374	MALE ELBOW 90° NON-SWIVEL / PUSH-IN FITTING / #4x3/8NPT-M BR			1		
52	5001357	ROUND SPACER 7/16" O.D. X 5/16" I.D. X 13/32"			4		
53	502769	SCREW CAP HEX M6-1.0x70 G10.9 DP			2		
54	5001106	SCREW CAP HEX M6-1.0x10 G8.8 Z050			1		
NS	690297	HARNESS DOUBLE XLII			1		
		AS) AS SHOWN					
		H) USE ONLY WITH "HIGH" ALTITUDE OPERATIONAL					
		2) NOT SOLD BY PREVOST (SEE MANUFACTURING PART NUMBER AT END OF DESCRIPTION LINE)					

From 2-7781 To 6-8805		Date:07/2024	PAGE:Y2-2390-11
"SLIDE-OUT" AIR CONTROL PANEL			

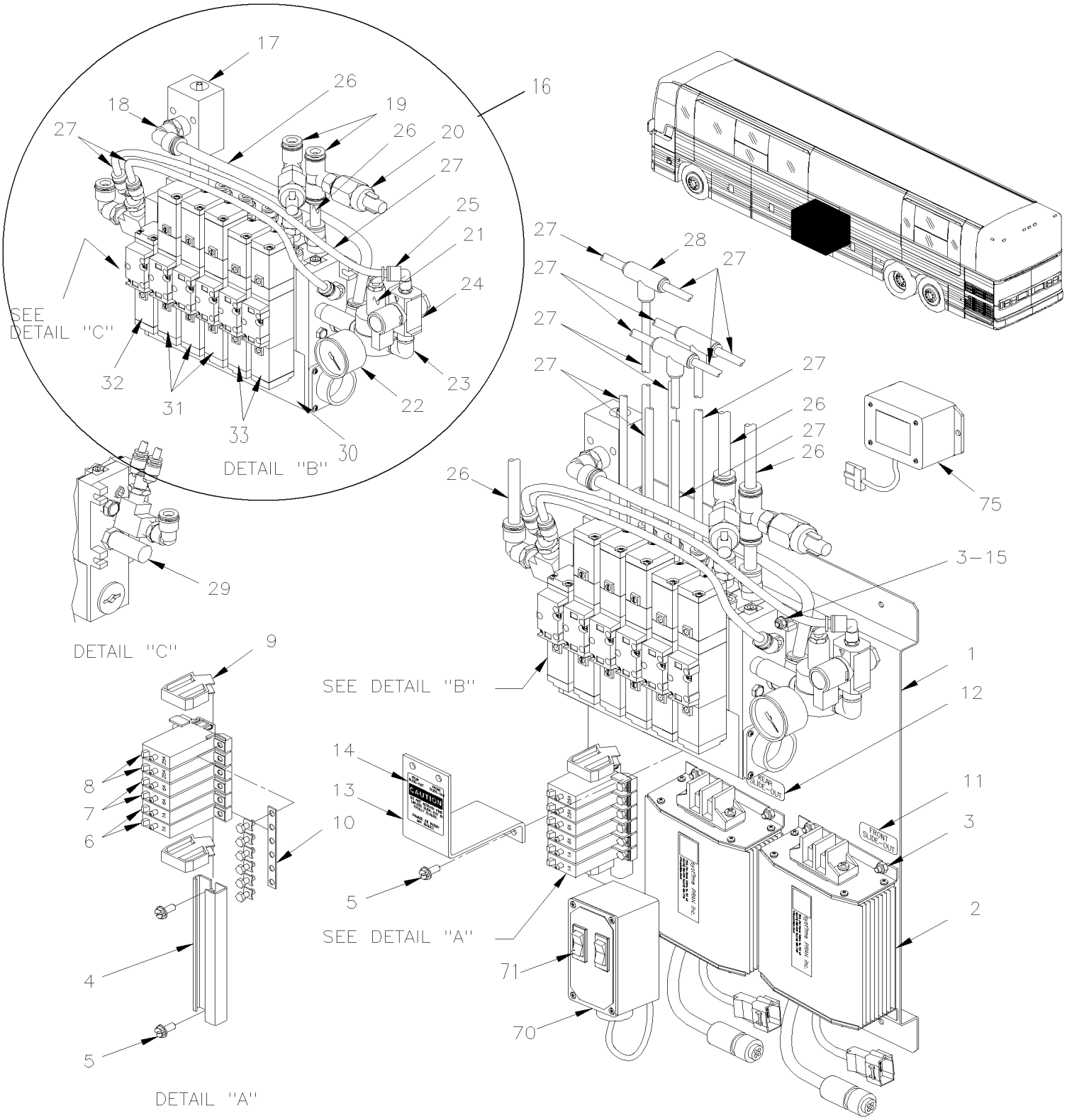

From 2-7781 To 6-8805		Date:07/2024	PAGE:Y2-2390-11
"SLIDE-OUT" AIR CONTROL PANEL			

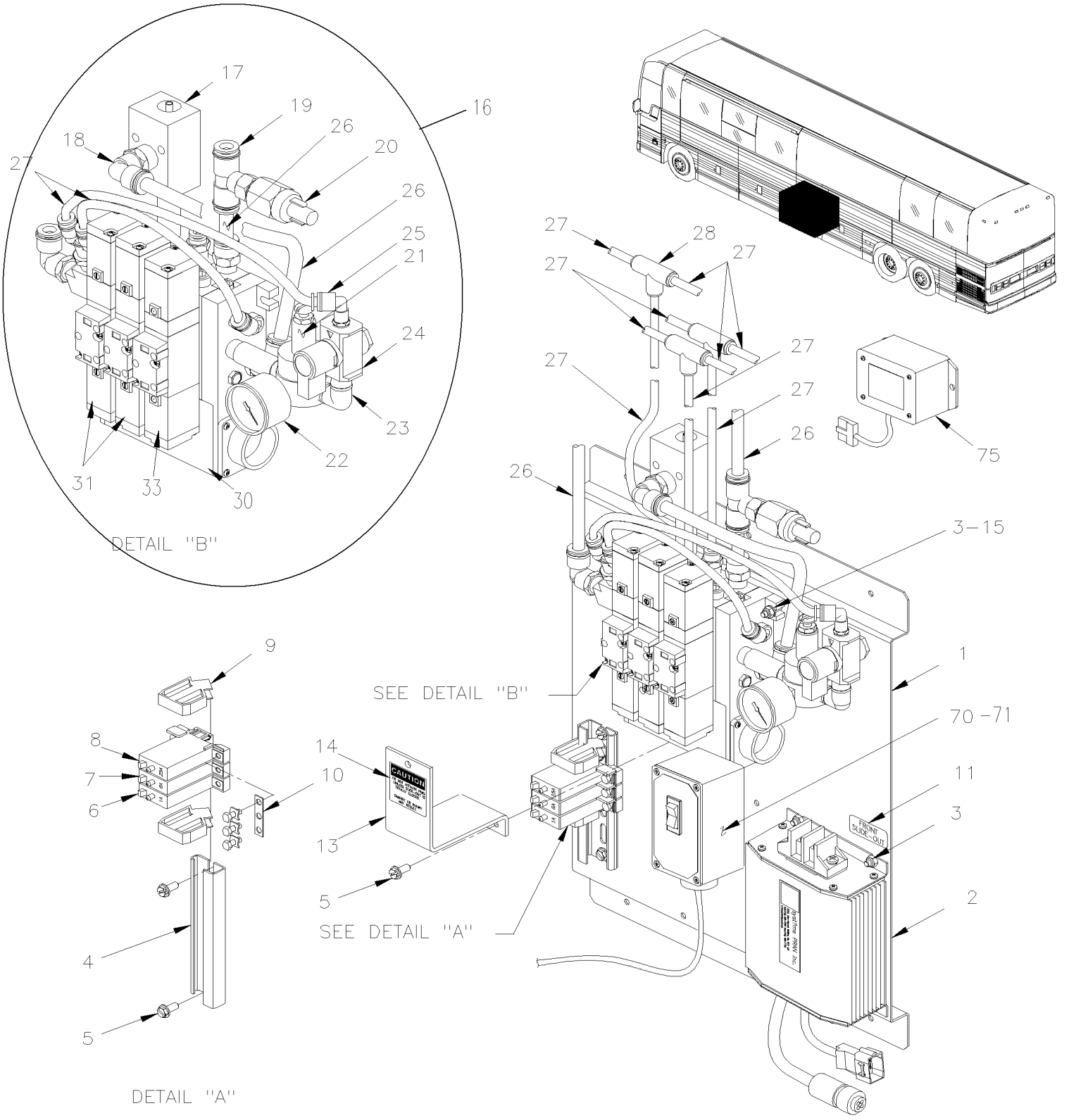

From 2-7781 To 6-8805		Date:07/2024	PAGE:Y2-2390-11
"SLIDE-OUT" AIR CONTROL PANEL			

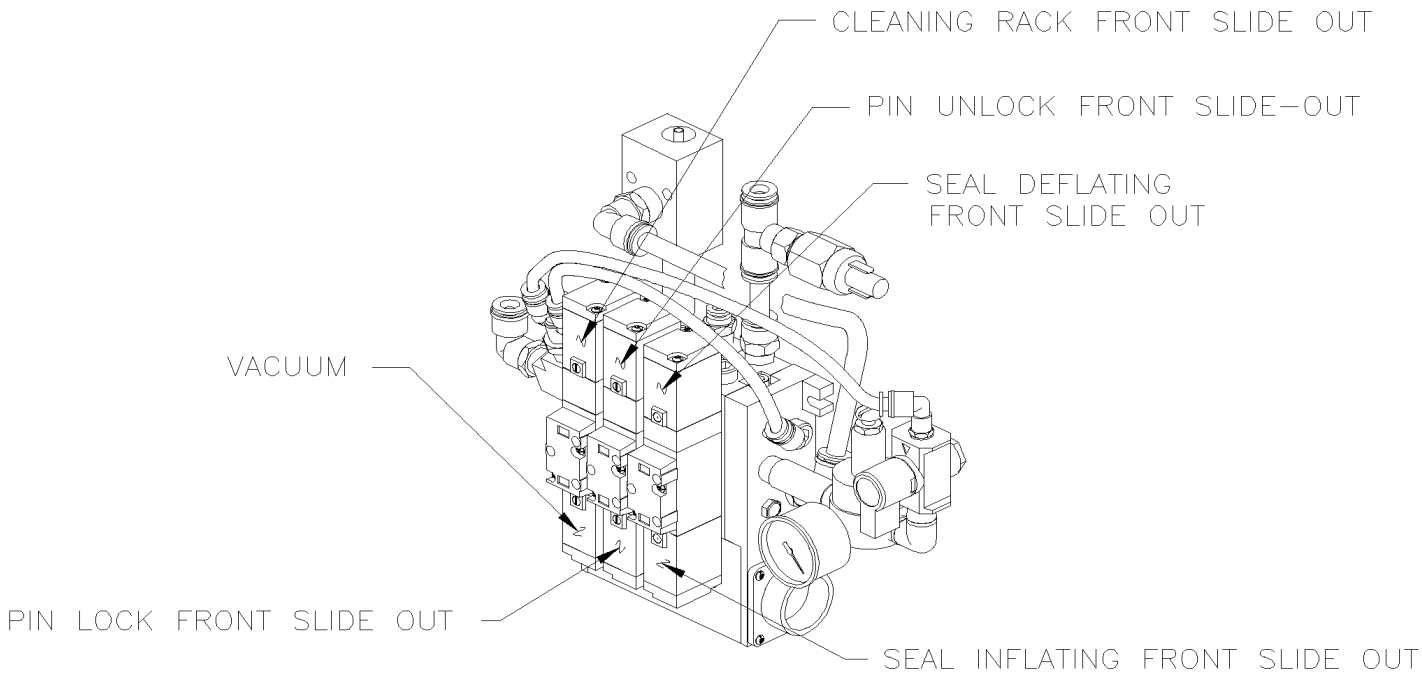

WITH FRONT SLIDE OUT ONLY

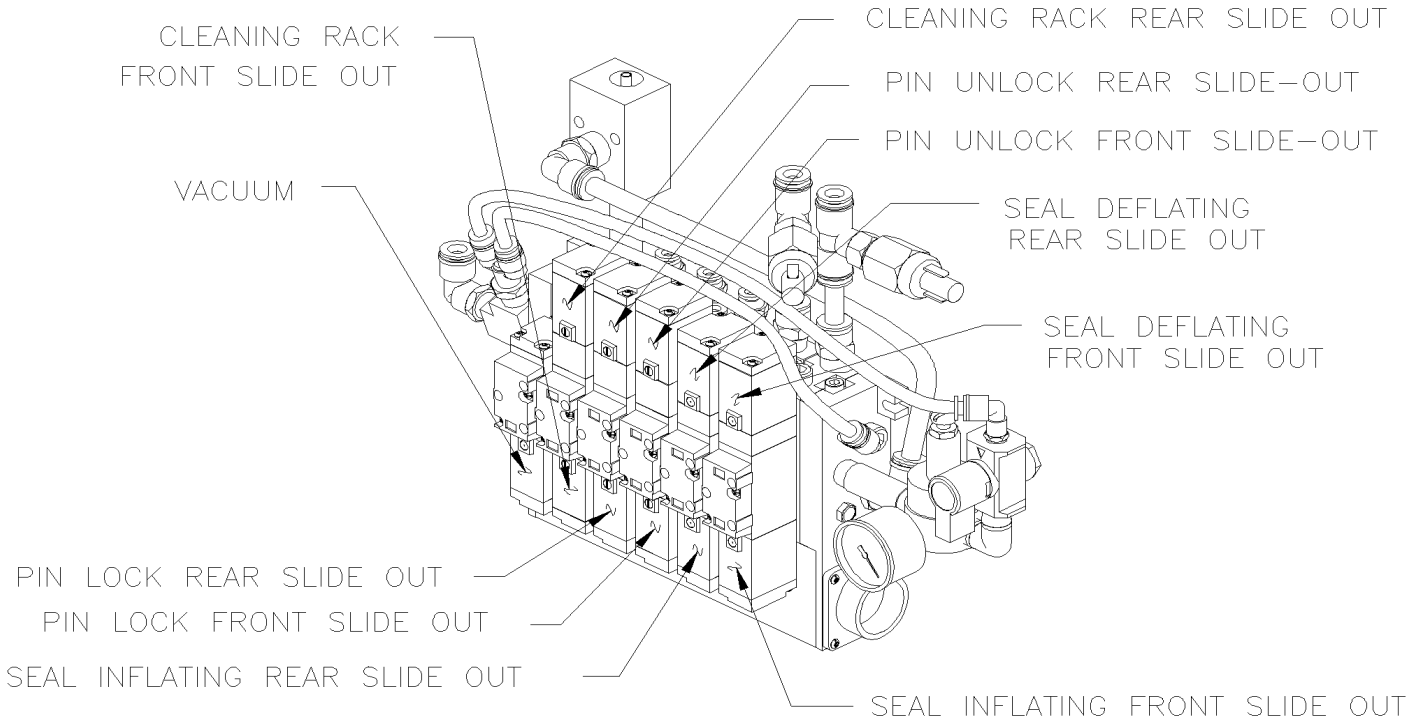

WITH FRONT & REAR SLIDE OUT

From 2-7781 To 6-8805		Date:07/2024	PAGE:Y2-2390-11
"SLIDE-OUT" AIR CONTROL PANEL			

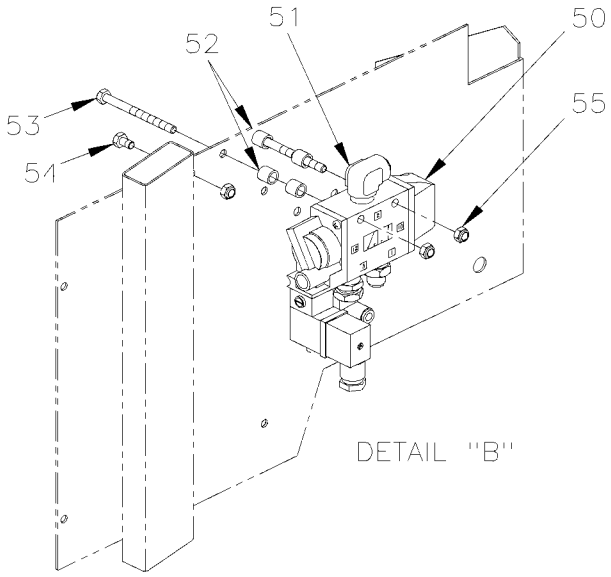

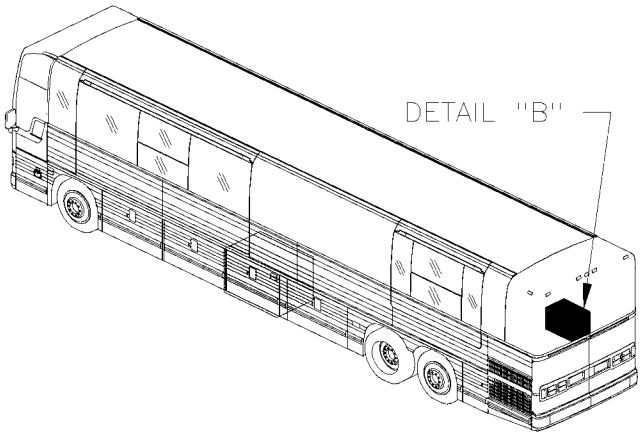

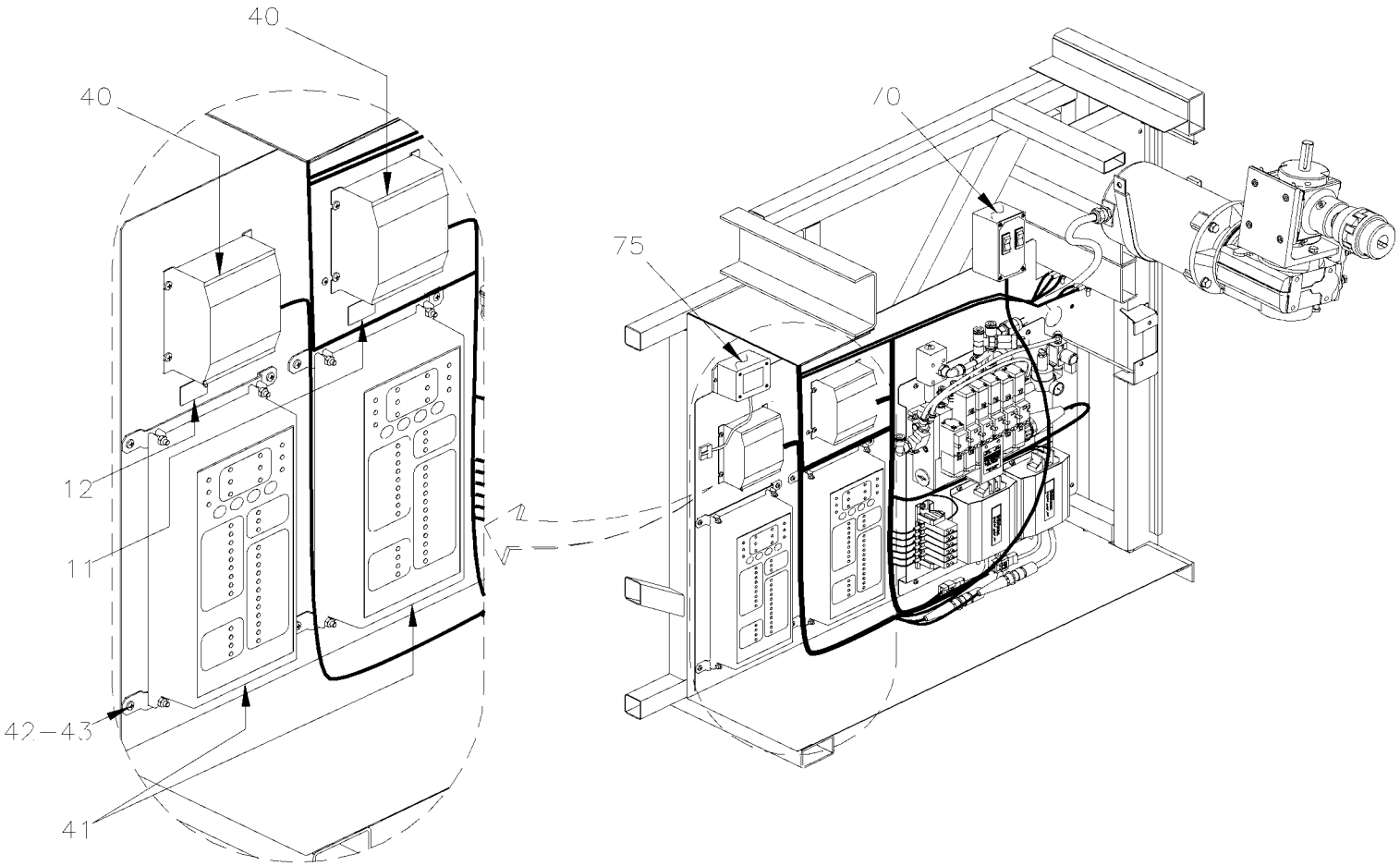

From 2-7781 To 6-8805		Date:07/2024	PAGE:Y2-2390-11

"SLIDE-OUT" AIR CONTROL PANEL

Item#	Part	Description	XLII 45	XLII MTH40	XLII MTH45	XLII MTH45E	NOTES
1	065903	SUPPORT / DRIVE CONTROL MODULE W/DOUBLE SLIDE-OUT			1		
1	065904	SUPPORT / DRIVE CONTROL MODULE W/SINGLE SLIDE-OUT			1		
2	563319	MODULE MOTOR DRIVE ASM 24V			1		R
2	563318	MODULE MOTOR DRIVE ASM 24V			1		F
3	502783	SCREW TP CAP HEXW #6x3/8 ZP To 4-8251			12		
3	502841	NUT HEX NYRT M5-0.8 N500 From 4-8252			12		
4	690063	RAIL SUPPORT / 100MM To 4-8251			1		
4	381203	RAIL SUPPORT / 100MM From 4-8252			1		
5	690275	SCR TP HEXW SLT ZP #12-16 X 1/2 LG. To 4-8251			4		
5	502868	SCREW TC TR PH #10-16x1/2 N500 From 4-8252			4		
6	690356	BREAKER 1AMP / 24V / To 4-8251			2		
6	563382	BREAKER 1AMP / 24V / From 4-8252			2		
7	561790	BREAKER 6AMPS / 24V /			2		
8	561795	BREAKER 25AMPS / 24V /			1		
9	690357	STOPPER To 4-8251			1		
9	561729	STOPPER From 4-8252			1		
10	381817	BUS BAR / W/6 HOLES 77MM			1		
10	381814	BUS BAR / W/3 HOLES 38MM			1		
11	690096	DECAL "FRONT SLIDE OUT" To 4-8251			1		
11	065921	DECAL "FRONT SLIDE OUT" From 4-8252			1		
12	690097	DECAL "REAR SLIDE OUT" STICKER To 4-8251			1		
12	065922	DECAL "REAR SLIDE OUT" STICKER From 4-8252			1		
13	144819	PROTECTOR VALVE / W/DOUBLE "SLIDE-OUT" To 5-8384			1		
13	142345	PROTECTOR VALVE / W/DOUBLE "SLIDE-OUT" From 5-8385			1		
13	144825	PROTECTOR VALVE / W/SINGLE "SLIDE-OUT" To 5-8384			1		
13	142346	PROTECTOR VALVE / W/SINGLE "SLIDE-OUT" From 5-8385			1		
14	144823	DECAL "DO NOT ACTIVE…." / W/DOUBLE "SLIDE-OUT"			1		
14	144824	DECAL "DO NOT ACTIVE…." / W/SINGLE "SLIDE-OUT"			1		
15	N.P.N.	FLAT WASHER M5 ZP			4		4
16	144821	BLOCK VALVE ASSY COMPLET / W/SINGLE "SLIDE-OUT" To 5-8384			1		
16	142372	BLOCK VALVE ASSY COMPLET / W/SINGLE "SLIDE-OUT" From 5-8385			1		
16	144820	BLOCK VALVE ASSY COMPLET / W/DOUBLE "SLIDE-OUT" To 5-8384			1		
16	142371	BLOCK VALVE ASSY COMPLET / W/DOUBLE "SLIDE-OUT" From 5-8385			1		
17	690344	. VACUUM GENERATORS			1		
18	641375	. MALE ELBOW 90° NON-SWIVEL / PUSH-IN FITTING / #6x3/8NPT-M BR			1		
19	642002	. FEMALE BRANCH TEE / PUSH-IN FITTING / #6X#6X1/4NPT-F PLAS			1		
20	690361	. VACUUM SWITCH 16" HG To 5-8384			AR		
20	690423	. VACUUM SWITCH 1" HG / W/2 WIRES From 5-8385			AR		
20	690411	. PRESSURE SWITCH			AR		H
21	690380	. PRESSURE REGULATOR			1		
22	690379	. PRESSURE GAUGE 1/8 NPT			1		
23	641999	. MALE ELBOW 90º / PIPE FITTING / 3/8NPT-Mx3/8NPT-M BR			1		

From 2-7781 To 6-8805		Date:07/2024	PAGE:Y2-2390-11

"SLIDE-OUT" AIR CONTROL PANEL

Item#	Part	Description	XLII 45	XLII MTH40	XLII MTH45	XLII MTH45E	NOTES
24	690351	. PORT RELIEVING SHUT-OFF VALVE			1		
25	641371	. MALE ELBOW 90° NON-SWIVEL / PUSH-IN FITTING / #4x1/4NPT-M BR			1		
26	503404	. TUBE, NYLON 3/8 O.D. / BLACK S.L.			AR		
27	503402	. TUBE, NYLON 1/4 O.D. / BLACK S.L.			AR		
28	690382	. BRANCH TEE UNION PUSH-IN 1/4 TUBE			6		
29	N17945	. SILENCER / MUFFLER / 1/4NPT-M			1		AS
29	641926	. SILENCER / MUFFLER / 1/4NPT-M			1		
30	642006	. BLOCK VALVE / W/DOUBLE "SLIDE-OUT"			1		
30	642007	. BLOCK VALVE / W/SINGLE "SLIDE-OUT"			1		
30	642055	. . BLOCK VALVE SUB ASSY / W/SINGLE SLIDE OUT			1		S
30	642056	. . BLOCK VALVE SUB ASSY / W/DOUBLE SLIDE OUT			1		D
31	641996	. . . SOLENOID VALVE 5/3 ASSY / W/DOUBLE COIL			AR		
. NS	642059	. . . . GASKET VALVE BODY / RECTANGULAR			1		
32	641997	. . . SOLENOID VALVE 5/2 ASSY / W/SIMPLE COIL 2			1		
. NS	642059	. . . . GASKET VALVE BODY / RECTANGULAR			1		
33	641995	. . . SOLENOID VALVE 5/2 ASSY / W/DOUBLE COIL 2			AR		
. NS	642059	. . . . GASKET VALVE BODY / RECTANGULAR			1		
40	563222	SAFETY MODULE PR-4101			2		
41	563261	MODULE CONTROLER SLIDE-OUT / "PRAN" To 5-8384			2		
41	**062328**	**FRONT SLIDE-OUT MODULE REPLACEMENT KIT To 5-8384**			1		A
41	**062381**	**REAR SLIDE-OUT MODULE REPLACEMENT KIT To 5-8384**			1		A
41	563430	MODULE CONTROLER SLIDE-OUT / "PRAN" From 5-8385			2		
41	**060481**	**SLIDE-OUT MODULE REPLACEMENT KIT From 5-8385**			2		A
41	7770121	DIAGNOSTIC TOOL			1		
42	065908	SUPPORT / PRAN MODULE			2		
43	500854	SCREW TC BDG PH #8-32x3/4 N500			AR		
50	641937	VALVE, 3 WAYS, 2 POSITIONS N.C. / W/MAN OVERRIDE			1		
. NS	641929	. COIL 24V			1		
. NS	641385	. CONNECTOR / SOCKET HOUSING ASSY 3C / PNEUMAC 54934-01			1		
51	641374	MALE ELBOW 90° NON-SWIVEL / PUSH-IN FITTING / #4x3/8NPT-M BR			1		
52	5001357	ROUND SPACER 7/16" O.D. X 5/16" I.D. X 13/32"			4		
53	502769	SCREW CAP HEX M6-1.0x70 G10.9 DP			2		
54	5001106	SCREW CAP HEX M6-1.0x10 G8.8 Z050			1		
55	502511	NUT HEX NYRT M6-1.0 Z050			2		
70	382091	REMOTE CONTROL / DOUBLE SLIDE-OUT From 5-8385			1		
71	563547	. SWITCH / M/ON-OFF-M/ON D P.D.T WHITE From 5-8385			2		
71	066171	. DECAL From 5-8385			1		
75	563540	REGULATOR VOLTAGE / PRAN From 5-8385			1		
NS	065797	WIRING MAIN HARNESS / DOUBLE SLIDE-OUT XL2 From 3-8071 To 4-4757			1		
NS	065832	WIRING MAIN HARNESS / DOUBLE SLIDE-OUT XL2 From 4-4758 To 5-8494			1		
NS	065992	WIRING MAIN HARNESS / DOUBLE SLIDE-OUT XL2 From 5-8495			1		
NS	065798	WIRING MAIN HARNESS / SINGLE SLIDE-OUT XL2 From 3-8071 To 5-8494			1		

From 2-7781 To 6-8805		Date:07/2024	PAGE:Y2-2390-11

"SLIDE-OUT" AIR CONTROL PANEL

Item#	Part	Description	XLII 45	XLII MTH40	XLII MTH45	XLII MTH45E	NOTES
NS	065993	WIRING MAIN HARNESS / SINGLE SLIDE-OUT XL2 From 5-8495			1		
		A) SERVICE ONLY					
		AS) AS SHOWN					
		D) INCLUDE ITEM # 31 QTY 3 , ITEM # 32 QTY 1 & ITEM # 33 QTY 2					
		F) USE WITH FRONT "SLIDE OUT" ONLY					
		H) USE ONLY WITH "HIGH" ALTITUDE OPERATIONAL					
		R) USE WITH REAR "SLIDE OUT" ONLY					
		S) INCLUDE ITEM # 31 QTY 2 & ITEM # 33 QTY 1					
		4) NO PARTS NUMBER					

To 5-8384		Date:07/2024	PAGE:062328
FRONT SLIDE-OUT MODULE REPLACEMENT KIT			

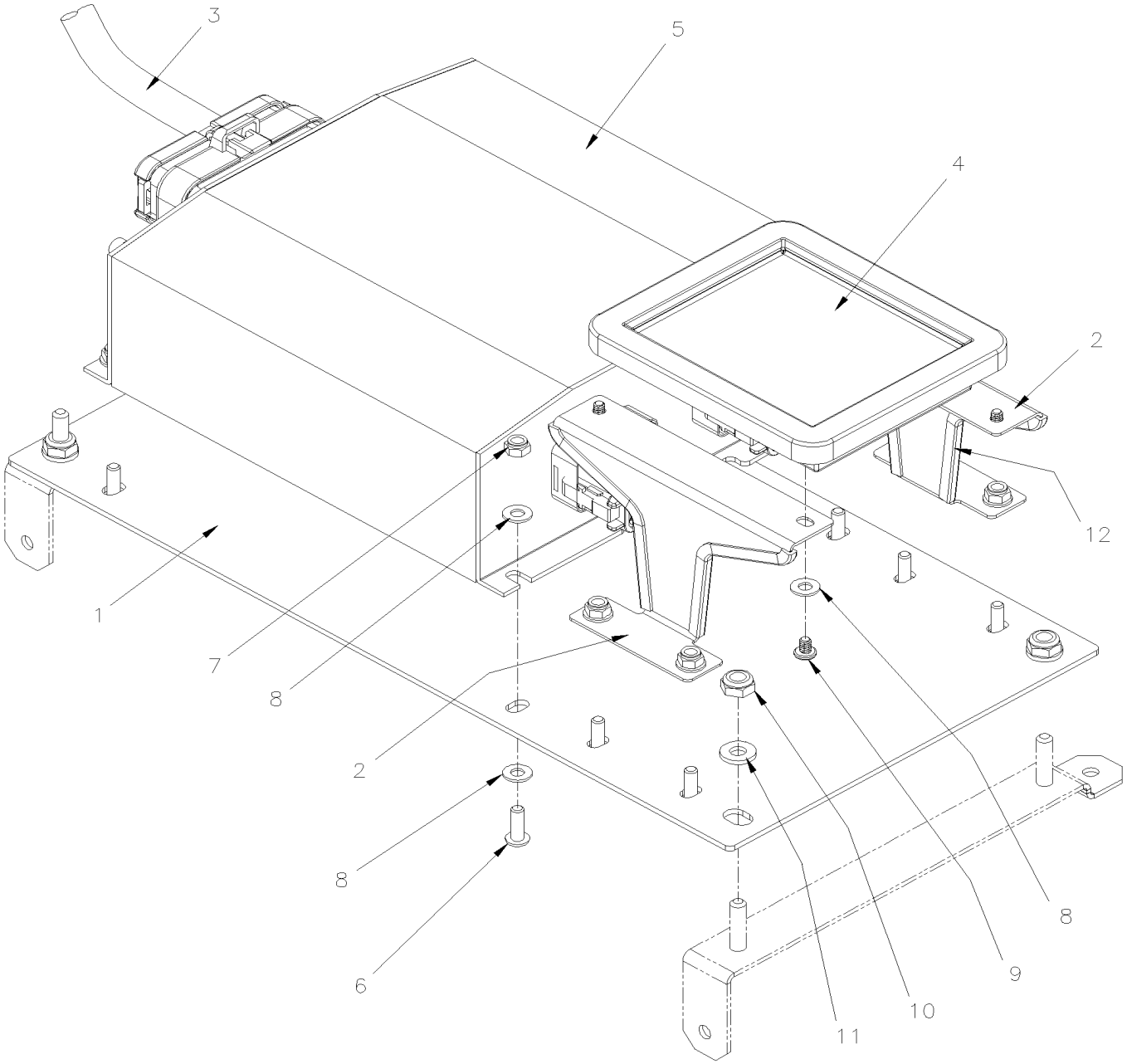

To 5-8384		Date:07/2024	PAGE:062328

FRONT SLIDE-OUT MODULE REPLACEMENT KIT

Item#	Part	Description	XLII 45	XLII MTH40	XLII MTH45	XLII MTH45E	NOTES
1	060575	BASE	1	1	1	1	
2	060579	KEYBOARD SUPPORT	2	2	2	2	
3	560555	WIRING FOR SLIDE OUT MODULE / GEN 2	1	1	1	1	
4	560556	KEYBOARD FRONT SLIDE-OUT MODULE / GEN 2	1	1	1	1	
5	560557	MODULE SLIDE-OUT / GEN 2	1	1	1	1	
NS	560558	WIRE INTERFACE PRAN J1939	1	1	1	1	
6	5001996	SCREW MA PAN PH M4-0.7x12 N500	8	8	8	8	
7	500539	NUT HEX NYRT M4-0.7 N500	8	8	8	8	
8	502556	WASHER FL 4.3x9.0x0.8 SS	20	20	20	20	
9	5000355	SCREW MA PAN PH #6-32x3/16 SS	4	4	4	4	
10	502841	NUT HEX NYRT M5-0.8 N500	4	4	4	4	
11	5001137	WASHER FL .203x.438x.050 SS	4	4	4	4	
12	5060120	GROMMET EDGING ADHESIVE .036-.062	AR	AR	AR	AR	

To 5-8384		Date:07/2024	PAGE:062381
REAR SLIDE-OUT MODULE REPLACEMENT KIT			

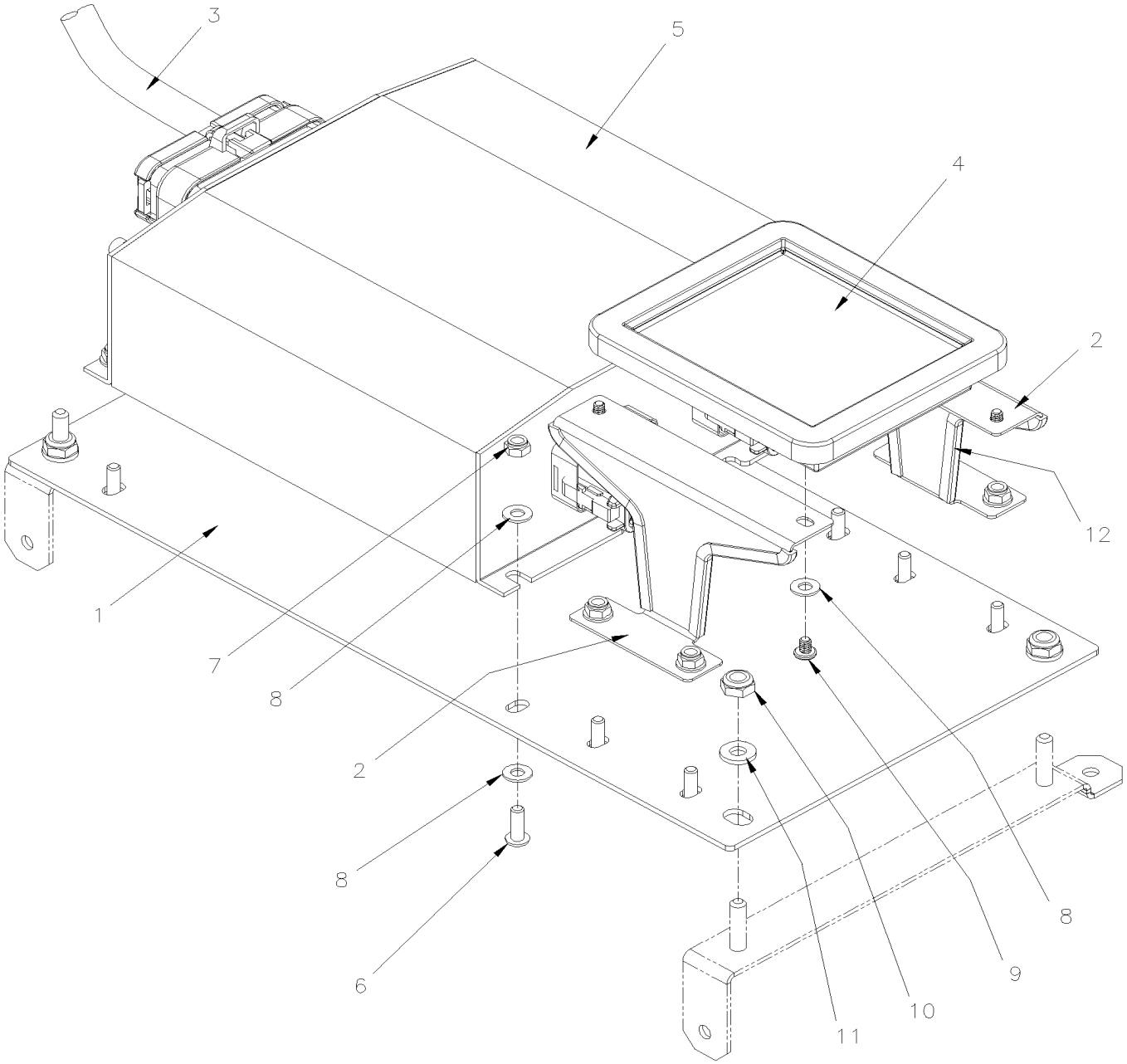

To 5-8384		Date:07/2024	PAGE:062381

REAR SLIDE-OUT MODULE REPLACEMENT KIT

Item#	Part	Description	XLII 45	XLII MTH40	XLII MTH45	XLII MTH45E	NOTES
1	060575	BASE	1	1	1	1	
2	060579	KEYBOARD SUPPORT	2	2	2	2	
3	560555	WIRING FOR SLIDE OUT MODULE / GEN 2	1	1	1	1	
4	560559	KEYBOARD REAR SLIDE-OUT MODULE / GEN 2	1	1	1	1	
5	560557	MODULE SLIDE-OUT / GEN 2	1	1	1	1	
NS	560558	WIRE INTERFACE PRAN J1939	1	1	1	1	
6	5001996	SCREW MA PAN PH M4-0.7x12 N500	8	8	8	8	
7	500539	NUT HEX NYRT M4-0.7 N500	8	8	8	8	
8	502556	WASHER FL 4.3x9.0x0.8 SS	20	20	20	20	
9	5000355	SCREW MA PAN PH #6-32x3/16 SS	4	4	4	4	
10	502841	NUT HEX NYRT M5-0.8 N500	4	4	4	4	
11	5001137	WASHER FL .203x.438x.050 SS	4	4	4	4	
12	5060120	GROMMET EDGING ADHESIVE .036-.062	AR	AR	AR	AR	

From 5-8385		Date:07/2024	PAGE:060481
SLIDE-OUT MODULE REPLACEMENT KIT			

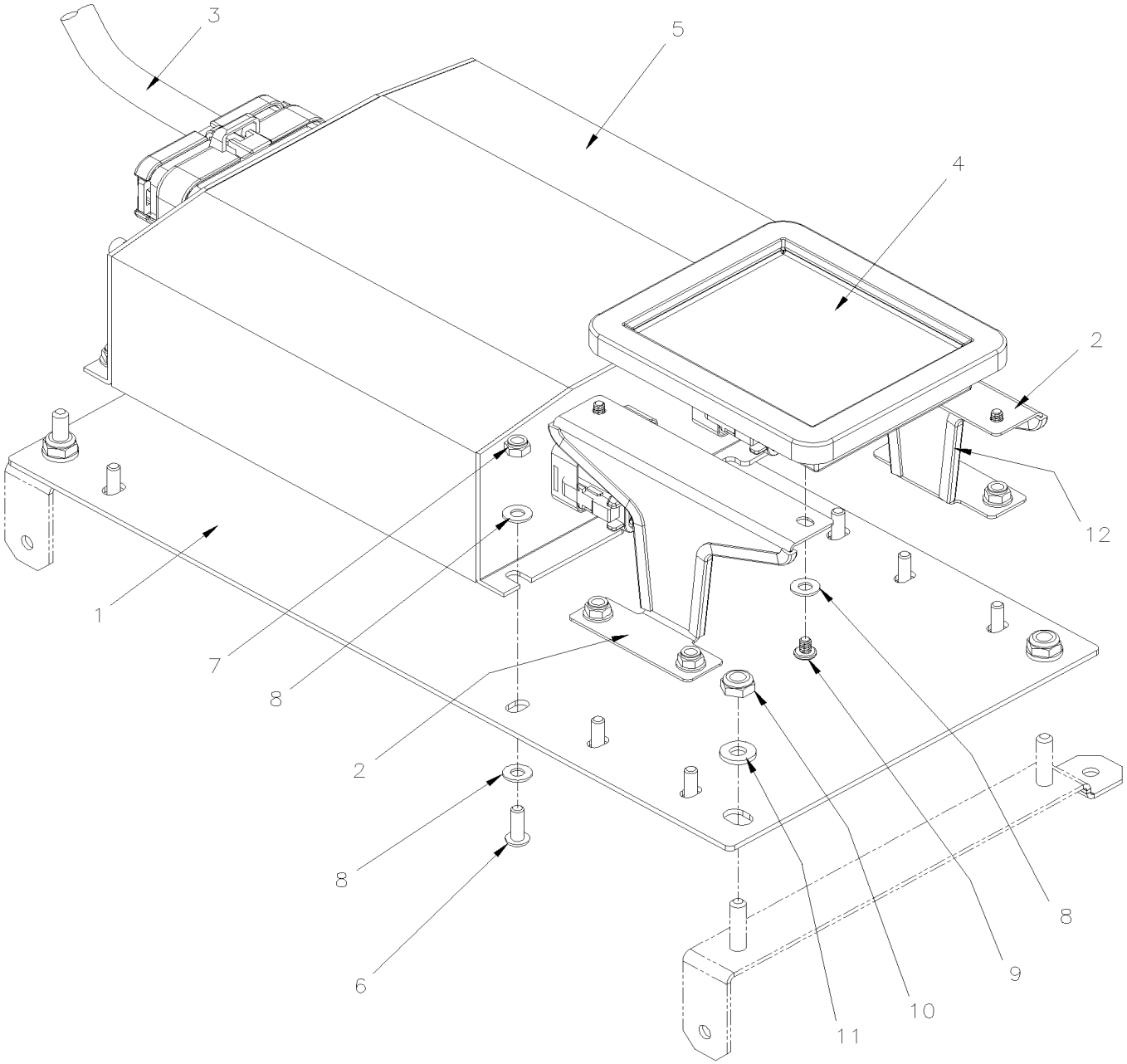

From 5-8385		Date:07/2024	PAGE:060481

SLIDE-OUT MODULE REPLACEMENT KIT

Item#	Part	Description	XLII 45	XLII MTH40	XLII MTH45	XLII MTH45E	NOTES
1	060575	BASE	1	1	1	1	
2	060579	KEYBOARD SUPPORT	2	2	2	2	
3	560351	WIRING FOR SLIDE OUT MODULE	1	1	1	1	
4	560348	KEYPAD FOR PRAN MODULE	1	1	1	1	
5	560349	PRAN MODULE	1	1	1	1	
6	5001996	SCREW MA PAN PH M4-0.7x12 N500	8	8	8	8	
7	500539	NUT HEX NYRT M4-0.7 N500	8	8	8	8	
8	502556	WASHER FL 4.3x9.0x0.8 SS	20	20	20	20	
9	5000355	SCREW MA PAN PH #6-32x3/16 SS	4	4	4	4	
10	502841	NUT HEX NYRT M5-0.8 N500	4	4	4	4	
11	5001137	WASHER FL .203x.438x.050 SS	4	4	4	4	
12	5060120	GROMMET EDGING ADHESIVE .036-.062	AR	AR	AR	AR	
13	IS-16103	SEE INSTRUCTION SHEET	1	1	1	1	

From 6-8806 To 8-9339		Date:07/2024	PAGE:Y2-2390-12
"SLIDE-OUT" AIR CONTROL PANEL - MUX			

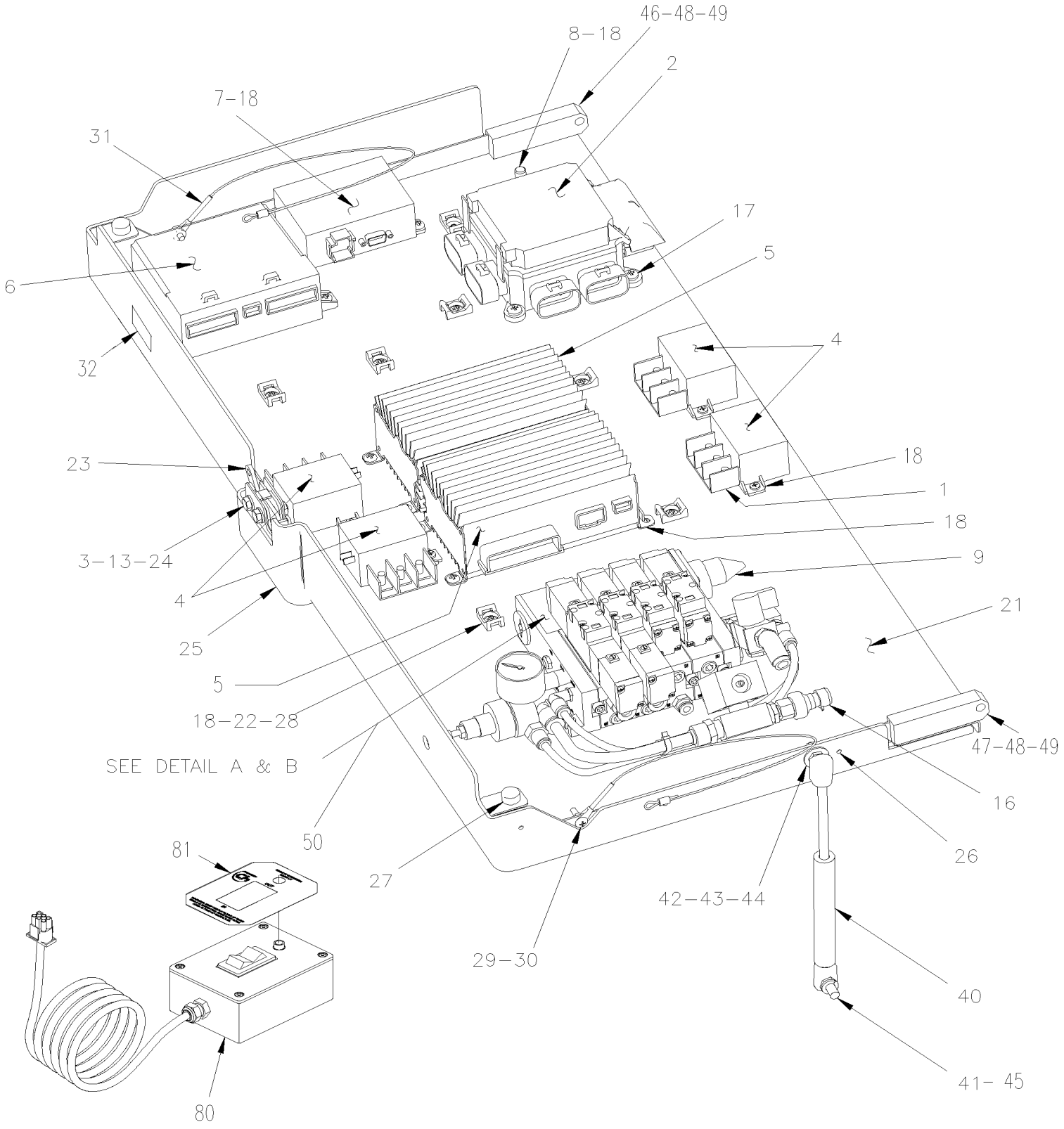

From 6-8806 To 8-9339		Date:07/2024	PAGE:Y2-2390-12
"SLIDE-OUT" AIR CONTROL PANEL - MUX			

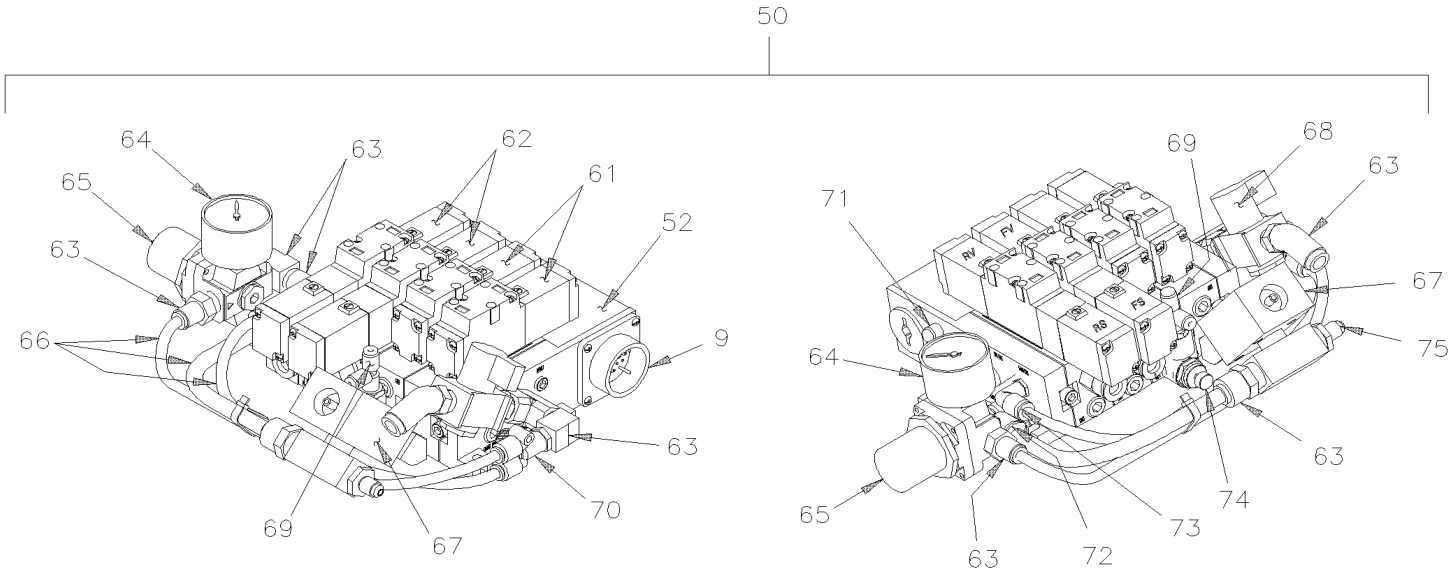

WITH DOOBLE SLIDE—OUT

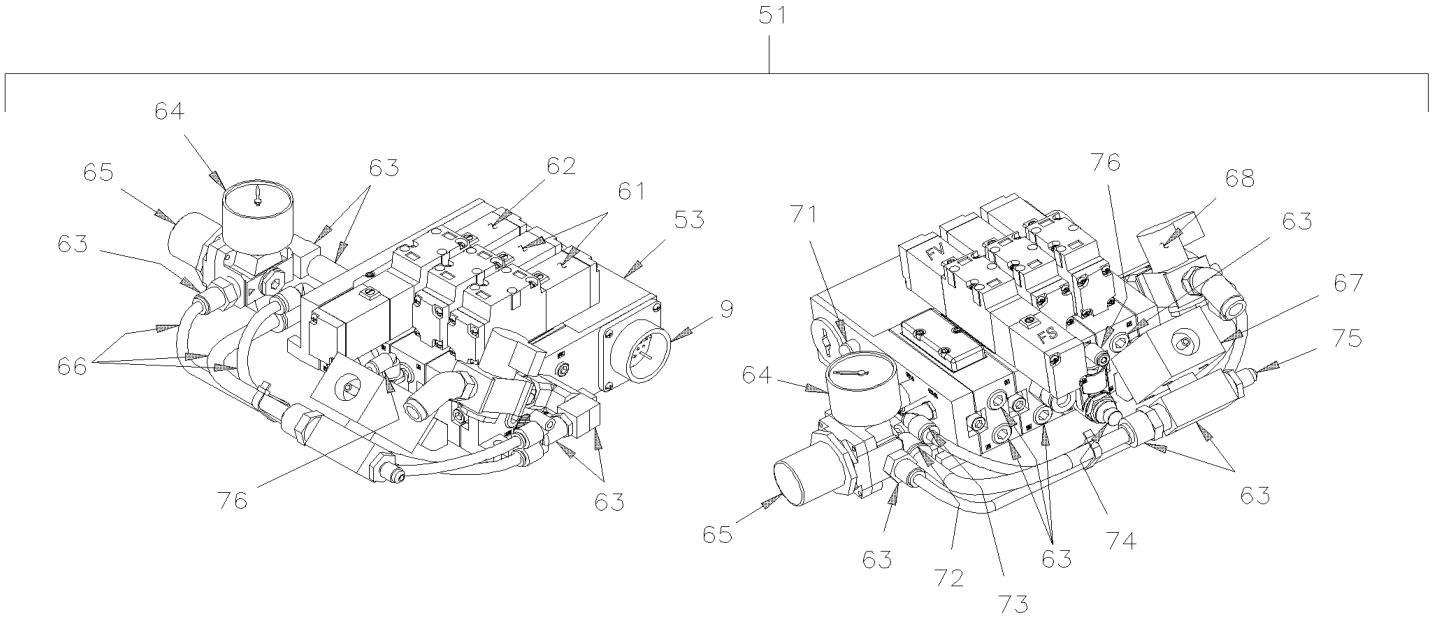

WITH SINGLE SLIDE—OUT

From 6-8806 To 8-9339		Date:07/2024	PAGE:Y2-2390-12

"SLIDE-OUT" AIR CONTROL PANEL - MUX

Item#	Part	Description	XLII 45	XLII MTH40	XLII MTH45	XLII MTH45E	NOTES
1	5001182	NUT HEX NYRT M6-1.0 SS			6	6	
2	563449	VEC DISTRIBUTION MODULE / W/SLIDE-OUT To 7-9095			1	1	
. NS	564104	. COVER / VEC BOX To 7-9095			1	1	
. NS	563004	. FUSE / ATM 2 AMPS GREY To 7-9095			1	1	
. NS	563279	. FUSE / ATM 3 AMPS VIOLET To 7-9095			1	1	
. NS	563280	. FUSE / ATM 5 AMPS AMBER To 7-9095			1	1	
. NS	563005	. FUSE / ATM 7.5 AMPS BROWN To 7-9095			1	1	
. NS	563284	. FUSE / ATM 15 AMPS BLUE To 7-9095			1	1	
. NS	563282	. FUSE / ATM 20 AMPS YELLOW To 7-9095			1	1	
. NS	563153	. FUSE / ATM 25 AMPS NATURAL To 7-9095			1	1	
. NS	563165	. FUSE / ATM 30 AMPS GREEN To 7-9095			1	1	
. NS	563181	. CONNECTOR / SH 8C / YELLOW / BUSSMANN 32006-E21 To 7-9095			1	1	
. NS	563182	. CONNECTOR / SH 8C / ORANGE / BUSSMANN 32006-G21 To 7-9095			1	1	
. NS	563183	. CONNECTOR / SH 8C / RED / BUSSMANN 32006-F21 To 7-9095			1	1	
. NS	563184	. CONNECTOR / SH 8C / GREEN / BUSSMANN 32006-C21 To 7-9095			1	1	
. NS	563185	. CONNECTOR / SH 8C / BLACK / BUSSMANN 32006-A21 To 7-9095			1	1	
. NS	563186	. CONNECTOR / SH 8C / GREY / BUSSMANN 32006-B21 To 7-9095			1	1	
. NS	563187	. CONNECTOR / SH 8C / BROWN / BUSSMANN 32006-H21 To 7-9095			1	1	
. NS	563448	. CONNECTOR / SH 8C / BLUE / BUSSMANN 32006-D21 To 7-9095			1	1	
. NS	19518268	. COVER RUBBER RED To 7-9095			2	2	
NS	066259	CABLE ASSY POWER VEC DISTRIBUTION To 7-9095			1	1	
3	500440	WASHER FL .250x.562x.065 Z050			2	2	
4	563445	RELAY POWER 24V 130 AMPS / S.P.D.T. N.O.			4	4	
5	563273	I/O B-MODULE VOLVO MULTIPLEX / ALUMINUM To 7-9116			AR	AR	
. NS	563132	. CONNECTOR / SH 2C / YAZAKI 7283-6458-40 To 7-9116			1	1	
. NS	563133	. CONNECTOR / JUNIOR POWER TIMER / SH 29C / AMP 1-963449-2 To 7-9116			1	1	
. NS	562957	. CONNECTOR / SH 5C / GREEN / JAE IL-AG5-5S-S3C1 To 7-9116			1	1	
5	565865	I/O B-MODULE VOLVO MULTIPLEX / ALUMINUM From 7-9117			1	1	
. NS	563132	. CONNECTOR / SH 2C / YAZAKI 7283-6458-40 From 7-9117			1	1	
. NS	563133	. CONNECTOR / JUNIOR POWER TIMER / SH 29C / AMP 1-963449-2 From 7-9117			1	1	
. NS	562957	. CONNECTOR / SH 5C / GREEN / JAE IL-AG5-5S-S3C1 From 7-9117			1	1	
6	563274	CECM VOLVO MULTIPLEX MODULE To 7-9095			1	1	
7	563295	MASTER ID-MODULE VOLVO MULTIPLEX To 7-9095			1	1	
. NS	562794	. CONNECTOR / JUNIOR POWER TIMER / SH 9C / AMP 964561-4 To 7-9095			1	1	
8	560422	BLOCK, TERMINAL / 1 STUD 3/8-16 / BLACK			1	1	
9	066261	WIRING HARNESS SLIDE-OUT FRONT LEFT To 7-9095			1	1	
9	066790	WIRING HARNESS SLIDE-OUT FRONT LEFT From 7-9096			1	1	
9	066260	WIRING HARNESS SLIDE-OUT REAR LEFT To 7-9095			1		
13	502819	NUT HEX JAM 1/4-20 Z050			2	2	
15	500658	SCREW TC PAN PH #10-24x3/4 Z050			4	4	
16	563459	TRANSDUSER -14.7 to 100LBS / 1/8 NPT-F			1	1	
. NS	563159	. CONNECTOR / METRI-PACK 150 / SH 3C / PED 12065287			1	1	

From 6-8806 To 8-9339		Date:07/2024	PAGE:Y2-2390-12

"SLIDE-OUT" AIR CONTROL PANEL - MUX

Item#	Part	Description	XLII 45	XLII MTH40	XLII MTH45	XLII MTH45E	NOTES
17	500841	SCREW TP PAN PH #14x3/4 Z050			4	4	
18	502868	SCREW TC TR PH #10-16x1/2 N500			AR	AR	
20	500638	SCREW TP PAN PH #8x1/2 Z050			1	1	
21	066632	PANEL MOUNTING / W/DOUBLE "SLIDE-OUT"			1	1	
21	067538	PANEL MOUNTING / W/TRIPLE "SLIDE-OUT"			1	1	
22	504013	TIE MOUNT / 1/4" X 1/4" I.D.			AR	AR	
23	780778	LOCK L.H.			1	1	
24	500163	SCREW CAP HEX 1/4-20x3/4 G5 Z050			1	1	
25	066380	COVER PLASTIC			1	1	
26	504105	RIVET POP DOME OE 1/8x3/16 AL			6	6	
27	504334	BUMPER RUBBER / .625 OD x .406 TH x .156 HOLE			1	1	
NS	500576	SCREW TC PAN PH #6-32x1/2 Z050			2	2	
28	504637	CABLE TIE / 3/16" x 13"			AR	AR	
29	5001241	SCREW MA TR PH #10-24x1/2 SS			1	1	
30	5001180	NUT HEX NYRT #10-24 SS			1	1	
31	Call order desk	CABLE RETAINER COVER			1	1	P
. NS	283069	. CABLE 1/16 DIA. / 565MM LG			1	1	
. NS	780341	. SLEEVE / TO HOLDING CABLE 1/16OD SS			1	1	
32	066395	DECAL "JCT BOX SLIDE-OUT " XL-II			1	1	
40	980020	CYLINDER GAZ / 244/164MM C/C / 35LBS To 7-9184			1	1	
40	980029	CYLINDER GAZ / 354/219MM C/C / 46LBS From 7-9185			1	1	
41	980015	BALL STUD / W/10 MM X M8-1.25 / 29.18 MM			1	1	
42	980027	BALL STUD / W/10 MM X M8-1.25 / 36.5MM			1	1	
43	500332	WASHER FL .328x.875x.062 N500			1	1	
44	500868	NUT HEX NYRT M8-1.25 Z050			1	1	
45	Call order desk	CYLINDER SUPPORT FIXED TO STRUCTURE			1	1	P
46	066489	HINGE BLOCK L.H. FIXED TO STRUCTURE			1	1	
47	066490	HINGE BLOCK R.H. FIXED TO STRUCTURE			1	1	
NS	5001634	SCREW SET HEXS CUP M6-1.0X12MM Z050			6	6	
48	507381	BUSHING W/SHOULDER 1/4" I,D,			2	2	
49	502180	PIN HITCH CLIP 3/32 x 1/2 Z050			2	2	
50	144840	CONTROL VALVE ASSY / W/DOUBLE "SLIDE-OUT" To 7-9095			1		
50	144866	CONTROL VALVE ASSY / W/DOUBLE "SLIDE-OUT" From 7-9096			1		
51	144841	CONTROL VALVE ASSY / W/SINGLE "SLIDE-OUT" To 7-9095			1	1	
51	144867	CONTROL VALVE ASSY / W/SINGLE "SLIDE-OUT" From 7-9096			1	1	
52	642024	. BLOCK VALVE / W/DOUBLE "SLIDE-OUT"			1		D
53	642025	. BLOCK VALVE / W/SINGLE "SLIDE-OUT"			1	1	S
61	641995	. . SOLENOID VALVE 5/2 ASSY / W/DOUBLE COIL 2			1		
. NS	642059	. . . GASKET VALVE BODY / RECTANGULAR			1		
62	641997	. . SOLENOID VALVE 5/2 ASSY / W/SIMPLE COIL 2			1	1	
. NS	642059	. . . GASKET VALVE BODY / RECTANGULAR			1	1	
63	**Y2-1201-00**	**. FITTING - MISCELLANEOUS**	1	1	1	1	

From 6-8806 To 8-9339		Date:07/2024	PAGE:Y2-2390-12

"SLIDE-OUT" AIR CONTROL PANEL - MUX

Item#	Part	Description	XLII 45	XLII MTH40	XLII MTH45	XLII MTH45E	NOTES
64	690379	. PRESSURE GAUGE 1/8 NPT			1	1	
65	647891	. PRESSURE REGULATOR			1	1	
66	**Y2-1202-00**	**. TUBES PLASTIC / AIR D.O.T.**	1	1	1	1	
67	690344	. VACUUM GENERATORS			1	1	
68	690351	. PORT RELIEVING SHUT-OFF VALVE			1	1	
69	641920	. MALE RUN TEE / PUSH-IN FITTING / #2x#2x1/4NPT-M PLAS			1		
70	642047	. MALE BRANCH "Y" / PUSH-IN FITTING / #4X#4X1/4NPT-M PLAS			1	1	
71	642048	. SILENCER / MUFFLER / 1/8NPT-M			1	1	
72	642051	. MALE ELBOW 90° / PUSH-IN FITTING / #6x1/4NPT-M PLAS			1	1	
73	642052	. MALE ELBOW 90° / PUSH-IN FITTING / #2x3/8NPT-M PLAS			1	1	
74	642050	. AIR REGULATOR			1	1	
75	642049	. MALE CONNECTOR / PUSH-IN FITTING / #4x3/8NPT-M PLAS			1	1	
76	642053	. MALE ELBOW 90° / PUSH-IN FITTING / #2x1/4NPT-M PLAS			1	1	
80	382048	REMOTE CONTROL / SINGLE SLIDE-OUT			AR	AR	
. NS	563380	. SWITCH / M/ON-OFF-M/ON S P.D.T BLACK			1	1	
. NS	564421	. PILOT LIGHT GREEN / LED 24V			1	1	
. NS	382047	. DECAL "REMOTE CONTROL"			1	1	
81	382047	DECAL "REMOTE CONTROL"			1	1	
		D) INCLUDE ITEM # 61 QTY 2 & ITEM # 62 QTY 2					
		S) INCLUDE ITEM # 61 QTY 1 & ITEM # 62 QTY 2					
		P) CALL ORDER DESK FOR SPECIFIC APPLICATION (V.I.N.)					

From Y-7046 To 6-8805		Date:07/2024	PAGE:Y2-2390-20
"SLIDE-OUT" - FRONT MECHANISM - INSTALLATION			

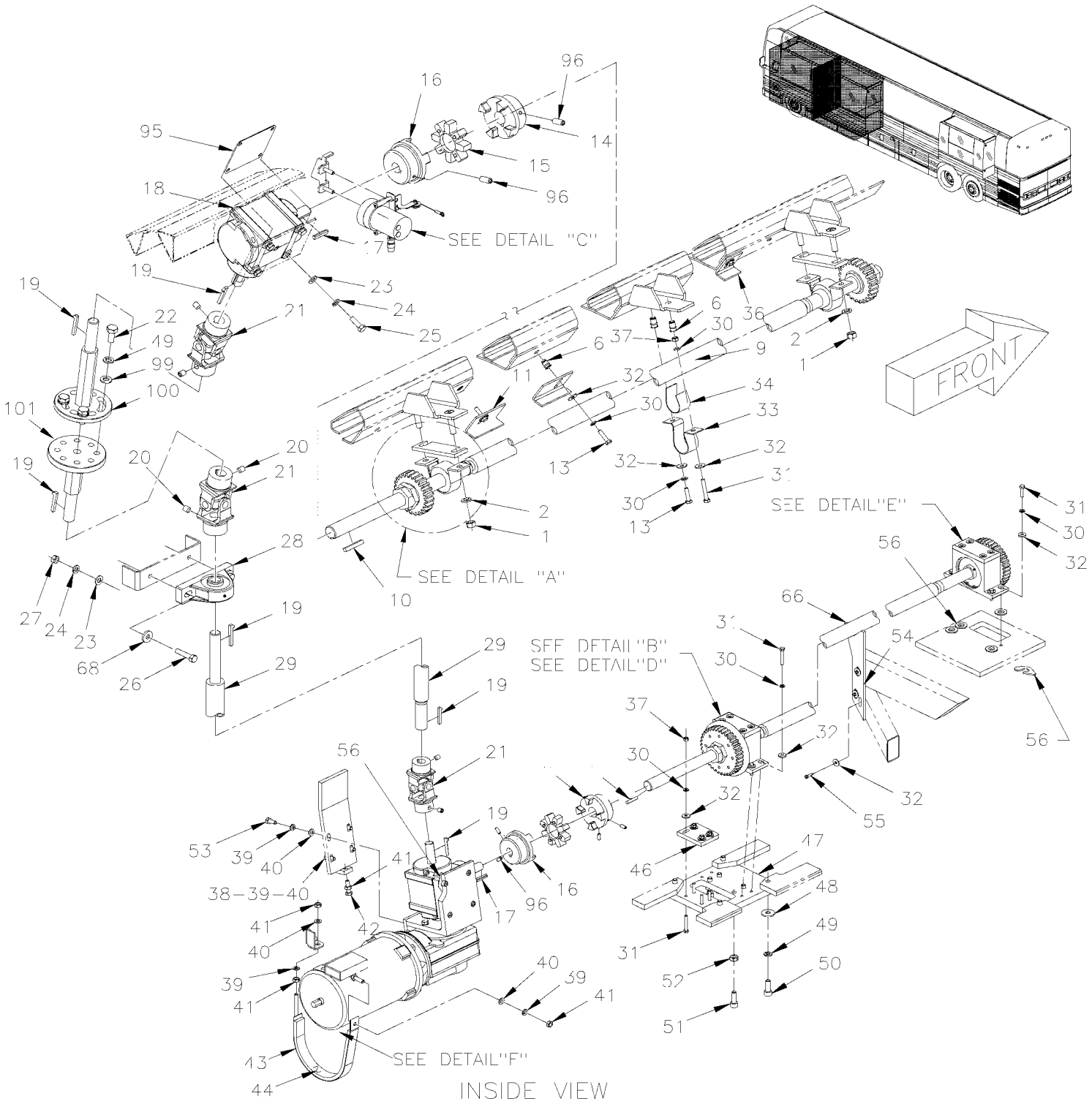

From Y-7046 To 6-8805		Date:07/2024	PAGE:Y2-2390-20
"SLIDE-OUT" - FRONT MECHANISM - INSTALLATION			

INSIDE VIEW

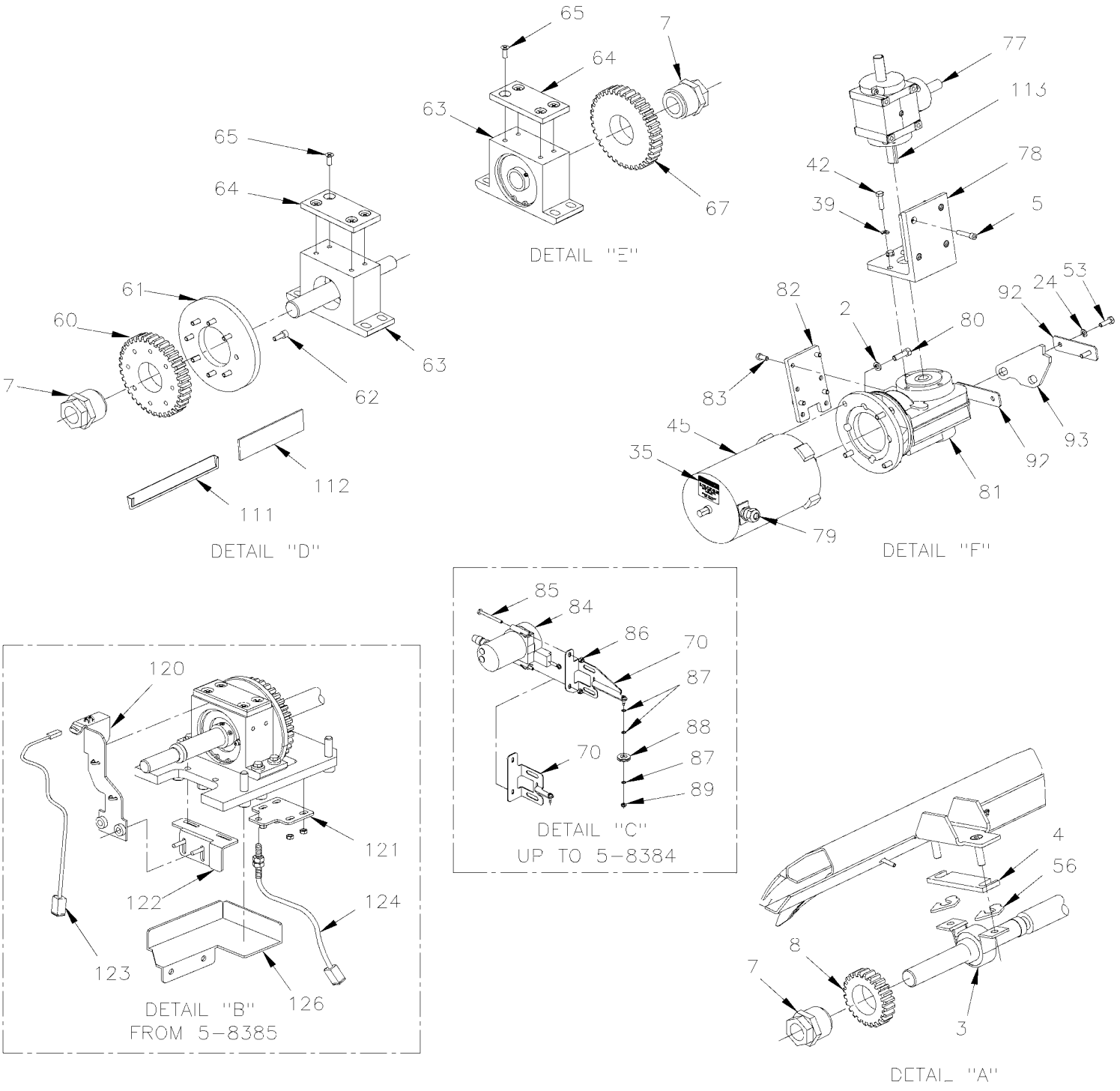

From Y-7046 To 6-8805		Date:07/2024	PAGE:Y2-2390-20

"SLIDE-OUT" - FRONT MECHANISM - INSTALLATION

Item#	Part	Description	XLII 45	XLII MTH40	XLII MTH45	XLII MTH45E	NOTES
1	500783	NUT HEX 3/8-16 Z050			4		
2	500478	WASHER LO SPT .380x.683x.094 Z050			4		
3	690315	PILLOW BLOCK LPB1 To 4-8251			2		
3	507631	PILLOW BLOCK LPB1 From 4-8252			2		
. NS	5000101	. PILLOW BLOCK From 4-8252			1		
. NS	5000100	. BEARING 1PO ID x 52MM OD From 4-8252			1		
4	690019	SPACER 6.35MM To 4-8251			2		
4	479128	SPACER 6.35MM From 4-8252			2		
5	502512	SCREW CAP HEXS 5/16-18x1 1/2 ZP			4		
6	690259	NUT INS TYPE "A-L" OE M6-1.0 0.7-4.2 ZP To 4-8251			11		
6	502842	NUT INS TYPE "A-L" OE M6-1.0 0.7-4.2 Z050 From 4-8252			11		
7	690313	CPG TRANTORQUE GT To 4-8251			4		
7	505523	CPG TRANTORQUE GT From 4-8252			4		
8	690075	TOP GEAR To 4-8251			2		
8	479115	TOP GEAR From 4-8252			2		
9	690042	UPPER SHAFT To 4-8251			1		
9	476198	UPPER SHAFT From 4-8252			1		
10	690006	PARALLEL KEY To 4-8251			2		
10	476160	PARALLEL KEY From 4-8252			2		
11	690031	UPPER LIMITING KEY To 4-8251			1		
11	476103	UPPER LIMITING KEY From 4-8252			1		
12	690267	WASHER LO SERR 6.1x16.0x0.9 ZP To 4-8251			11		
12	500356	WASHER LO SERR 6.1x16.0x0.9 N500 From 4-8252			11		
13	5001209	SCREW CAP HEX M6-1.0x25 G8.8 Z050			10		
14	690016	COUPLING SHAFT DRIVE 1" I.D. / TYPE GS 38 To 3-7929			2		
14	407513	COUPLING SHAFT DRIVE 1" I.D. / TYPE GS 38 From 3-7930			2		
. NS	502506	. SCREW SET HEXS CUP M4-0.7x16 From 3-7930			1		
. NS	5001282	. SCREW SET HEXS CUP 1/4-20x5/8 From 3-7930			1		
NS	502512	SCREW CAP HEXS 5/16-18x1 1/2 ZP From 3-7930			1		
15	690364	SPIDER RUBBER / TYPE GS 38 To 4-8251			2		
15	507632	SPIDER RUBBER / TYPE GS 38 From 4-8252			2		
16	690017	COUPLING SHAFT DRIVE 3/4" I.D. / TYPE GS 38 To 3-7929			2		
16	407512	COUPLING SHAFT DRIVE 3/4" I.D. / TYPE GS 38 From 3-7930			2		
. NS	502503	. SCREW CAP HEXS 5/16-18x1 1/2 N500 From 3-7930			1		
. NS	5001282	. SCREW SET HEXS CUP 1/4-20x5/8 From 3-7930			1		
16	502512	SCREW CAP HEXS 5/16-18x1 1/2 ZP From 3-7930			1		
17	690233	STEP KEY To 4-8251			2		
17	476039	STEP KEY From 4-8252			2		
18	690346	RIGHT ANGLE GEARBOX UPPER RATIO 1:1 To 4-8251			1		
18	970299	RIGHT ANGLE GEARBOX UPPER RATIO 1:1 From 4-8252			1		
19	690234	KEY 3/16" X 3/16" To 4-8251			5		
19	476037	KEY 3/16" X 3/16" From 4-8252			5		

From Y-7046 To 6-8805		Date:07/2024	PAGE:Y2-2390-20

"SLIDE-OUT" - FRONT MECHANISM - INSTALLATION

Item#	Part	Description	XLII 45	XLII MTH40	XLII MTH45	XLII MTH45E	NOTES
20	5001167	SCREW SET HEXS CUP 3/8-16x1/2			6		
21	505525	U-JOINT ASSY 3/4" O.D.SHAFT X 5" To 3-8004			3		
21	475977	U-JOINT ASSY 3/4" O.D.SHAFT X 5" From 3-8005			3		
. NS	476066	. "C" CLAMP From 3-8005			2		
. NS	500239	. SCREW CAP HEXS 1/4-20x1 ZP From 3-8005			4		
. NS	500319	. SCREW SET HEXS CUP 5/16-18x1/2 From 3-8005			2		
21	690320	KIT, CROSS & BEARING 15/16" O.D. X 2 1/4"			3		
NS	500239	. SCREW CAP HEXS 1/4-20x1 ZP From 3-8005			4		
NS	500319	. SCREW SET HEXS CUP 5/16-18x1/2 From 3-8005			2		
22	502559	SCREW CAP HEX M10-1.5x25 G8.8 Z050			4		
23	500441	WASHER FL .312x.734x.065 Z050			6		
24	500476	WASHER LO SPT .317x.586x.078 Z050			6		
25	5001263	SCREW CAP HEXS 5/16-18x1 ZP			4		
26	500183	SCREW CAP HEX 5/16-18x1 1/2 G5 PT Z050			2		
27	500778	NUT HEX 5/16-18 N500			2		
28	690317	PILLOW BLOCK NP 3/4 To 4-8251			1		
28	507630	PILLOW BLOCK NP 3/4 From 4-8252			1		
29	690039	LOWER VERTICAL SHAFT To 4-8251			1		
29	476197	LOWER VERTICAL SHAFT From 4-8252			1		
30	502564	WASHER LO SPT 6.1x11.8x1.6 Z050			14		
31	502793	SCREW CAP HEX M6-1.0x45 G8.8 Z050 To 5-8384			13		
31	5001209	SCREW CAP HEX M6-1.0x25 G8.8 Z050 From 5-8385			13		
NS	942605	WASHER LO EXT 6.4x11.0x0.7 ZP From 5-8385			AR		
32	690261	WASHER FL 6.4x12.0x1.6 SS To 4-8251			23		
32	502573	WASHER FL 6.4x12.5x1.6 SS From 4-8252			23		
33	Call order desk	SUPPORT To Y-7193			1		P
33	690126	SUPPORT From Y-7194 To 4-8251			1		
33	476203	SUPPORT From 4-8252			1		
34	690347	PLASTIC PAD To 4-8251			1		
34	5060057	TAPE RUB ADH1 UHMW .050" X 1" X 50' From 4-8252			1		
35	690236	DECAL "MANUAL OPERATION" To 4-8251			2		
35	476108	DECAL "MANUAL OPERATION" From 4-8252			2		
36	690110	UPPER LIMITING KEY To 4-8251			1		
36	476104	UPPER LIMITING KEY From 4-8252			1		
37	560365	FIBER LOOMS / 1/4" / BLACK			5		
38	502790	SCREW CAP HEX M8-1.25x20 G8.8 Z050			4		
39	5001003	WASHER LO SPT 8.1x12.7x2.0 Z050			6		
40	500874	WASHER FL 8.4x17.0x1.6 Z050			6		
41	502543	NUT HEX M8-1.25 Z050			4		
42	500544	SCREW CAP HEX M8-1.25x30 G8.8 Z050			1		
43	690100	STRAP ASSY To 4-8251			1		
43	476074	STRAP ASSY From 4-8252			1		

From Y-7046 To 6-8805		Date:07/2024	PAGE:Y2-2390-20

"SLIDE-OUT" - FRONT MECHANISM - INSTALLATION

Item#	Part	Description	XLII 45	XLII MTH40	XLII MTH45	XLII MTH45E	NOTES
44	690338	SELF SEALING SPONGE RUBBER 1" X 5/16" TH.			1		
45	690363	MOTOR 1/3 HP To 4-8251			1		
45	563315	MOTOR 1/3 HP From 4-8252			1		
46	690117	PLASTIC STOPPER To 4-8251			1		
46	476071	PLASTIC STOPPER From 4-8252			1		
47	690092	MOUNTING PLATE To 2-7843			1		
47	382015	MOUNTING PLATE From 2-7844 To 5-8384			1		
47	382060	MOUNTING PLATE From 5-8385			1		
48	502644	WASHER FL 10.5x30.0x2.5 Z050			4		
49	500257	WASHER LO SPT 10.2x18.1x2.2 Z050			8		
50	70314708	SCREW CAP HEXS M10-1.5X30 G8.8 ZP			4		
51	500317	SCREW CAP HEXS M10-1.5x45 G8.8 ZP			4		
52	500256	NUT HEX M10-1.5 Z050			4		
53	502589	SCREW CAP HEX M8-1.25x25 G8.8 Z050			2		
54	690018	SHAFT SUPPORT To 4-8251			1		
54	476070	SHAFT SUPPORT From 4-8252			1		
55	690272	SCREW TC CAP HEXW TEKS #8-18x3/4 ZP			3		
56	690056	SPACER 0.015" To 1-7574			AR		
56	144636	SPACER 0.015" To 1-7574			AR		
56	Call order desk	SPACER 0.015" From 1-7575			AR		P
56	690057	SPACER 0.031" To 1-7574			AR		
56	144637	SPACER 0.031" To 1-7574			AR		
56	Call order desk	SPACER 0.031" From 1-7575			AR		P
56	690058	SPACER 0.062" To 1-7574			AR		
56	144638	SPACER 0.062" To 1-7574			AR		
56	Call order desk	SPACER 0.062" From 1-7575			AR		P
56	690059	SPACER 0.125" To 1-7574			AR		
56	144639	SPACER 0.125" To 1-7574			AR		
56	Call order desk	SPACER 0.125" From 1-7575			AR		P
56	690404	SPACER 0,187"			AR		
56	144640	SPACER 0,187"			AR		
56	690403	SPACER 0,250"			AR		
56	144641	SPACER 0,250"			AR		
60	690077	GEAR To 4-8251			1		
60	479105	GEAR From 4-8252			1		
61	690076	GUIDE WHEEL To 4-8251			1		
61	479102	GUIDE WHEEL From 4-8252			1		
62	966802	SCREW CAP HEXS M6-1.0x16 G8.8 ZP			8		
63	690222	PILLOW BLOCK ASSY W/BEARING & SKID PAD To 4-8251			2		
63	479123	PILLOW BLOCK ASSY W/BEARING & SKID PAD From 4-8252 To 5-8384			2		
63	476399	PILLOW BLOCK ASSY W/BEARING & SKID PAD / WITH 2 HOLES TO INSTALL REE From 5-8355			2		
64	690037	SLIDING PAD			2		

From Y-7046 To 6-8805		Date:07/2024	PAGE:Y2-2390-20

"SLIDE-OUT" - FRONT MECHANISM - INSTALLATION

Item#	Part	Description	XLII 45	XLII MTH40	XLII MTH45	XLII MTH45E	NOTES
65	5001198	SCREW MA FL PH M6-1.0x16 Z050			8		
66	690041	LOWER SHAFT To 4-8251			1		
66	476196	LOWER SHAFT From 4-8252			1		
67	690078	GEAR To 4-8251			1		
67	479103	GEAR From 4-8252			1		
68	500441	WASHER FL .312x.734x.065 Z050			2		
NS	680038	THREAD LOCKER LOCTITE #243 / BLUE / 50ml			AR		
70	690070	TRANSDUCER LINEAR SUPPORT To 2-7773			1		
70	065850	TRANSDUCER LINEAR SUPPORT From 2-7774 To 5-8384			1		
NS	502511	NUT HEX NYRT M6-1.0 Z050 To 5-8384			2		
NS	690267	WASHER LO SERR 6.1x16.0x0.9 ZP To 4-8251			2		
NS	500356	WASHER LO SERR 6.1x16.0x0.9 N500 From 4-8252 To 5-8384			2		
NS	690261	WASHER FL 6.4x12.0x1.6 SS To 4-8251			2		
NS	502573	WASHER FL 6.4x12.5x1.6 SS From 4-8252 To 5-8384			2		
77	690249	RIGHT ANGLE GEARBOX To 4-8251			1		
77	970298	RIGHT ANGLE GEARBOX LOWER RATIO 1:1.5 From 4-8252			1		
78	690035	SUPPORT ASSY To 4-8251			1		
78	476087	SUPPORT ASSY From 4-8252			1		
79	690337	CONNECTOR STRAIGHT-THRU / HEYCO #3231 / BLK 1/2NPT-M / .170-.450 To 4-8251			1		
79	563336	CONNECTOR STRAIGHT-THRU / HEYCO #3231 / BLK 1/2NPT-M / .170-.450 From 4-8252			1		
80	500192	SCREW CAP HEX 3/8-16x1 1/4 G5 Z050			4		
81	690314	REDUCER 140:1 To 4-8251			1		
81	970297	REDUCER 140:1 From 4-8252			1		
82	Call order desk	SUPPORT To Y-7362			1		P
82	690124	SUPPORT From Y-7363 To 1-7512			1		
82	476082	SUPPORT From 1-7513			1		
83	690256	SCREW CAP HEXS M8-1,25x18 G8.8 To 4-8251			4		
83	5001573	SCREW CAP HEXS M8-1.25x18 G8.8 From 4-8252			4		
84	690388	LINEAR POSITION TRANDUCER To 4-8251			1		
84	563346	LINEAR POSITION TRANDUCER From 4-8252 To 5-8384			1		
85	690270	SCREW MA PAN PH M4-0.7x45 ZP To 4-8251			2		
85	502921	SCREW MA PAN PH M4-0.7x45 Z050 From 4-8252 To 5-8384			2		
86	500590	NUT HEX NYRT M4-0.7 Z050 To 5-8384			2		
87	690278	SHIM RND 1/64" To 4-8251			3		
87	502928	NUT WD TAB M8-1.25 From 4-8252 To 5-8384			3		
88	690279	IDLER PULLEY To 4-8251			1		
88	502924	IDLER PULLEY From 4-8252 To 5-8384			1		
89	500425	NUT HEX NYRT #4-40 SS To 5-8384			1		
92	690239	SPACER			2		
93	690235	REINFORCEMENT, MOTOR			1		
NS	682176	SEALANT SIKA #221 / BLACK / 310ml CARTRIDGE			AR		
95	690245	PLATE To 4-8251			1		

From Y-7046 To 6-8805		Date:07/2024	PAGE:Y2-2390-20

"SLIDE-OUT" - FRONT MECHANISM - INSTALLATION

Item#	Part	Description	XLII 45	XLII MTH40	XLII MTH45	XLII MTH45E	NOTES
95	479129	PLATE From 4-8252			1		
96	5001282	SCREW SET HEXS CUP 1/4-20x5/8			8		
97	690219	TUBE, AIR To 4-8251			2		
97	144635	TUBE, AIR From 4-8252			2		
NS	N25539	THREAD LOCKER LOCTITE #262 / RED / 250ml			AR		
99	502644	WASHER FL 10.5x30.0x2.5 Z050			4		
100	690246	SHAFT, UPPER (WELDED) To 4-8251			1		
100	475988	SHAFT, UPPER (WELDED) From 4-8252			1		
101	690247	SHAFT, BOTTOM (WELDED) To 4-8251			1		
101	475985	SHAFT, BOTTOM (WELDED) From 4-8252			1		
111	221266	GUTTER			1		
112	221267	PLATE			1		
113	690007	PARALLEL KEY To 4-8251			1		
113	476037	KEY 3/16" X 3/16" From 4-8252			1		
120	066030	SENSOR SUPPORT From 5-8385			1		
121	066044	SENSOR SUPPORT From 5-8385			1		
122	066063	SENSOR SUPPORT From 5-8385			1		
123	066079	LIMITING REED SWITCH ASSY W/LED S.P.D.T. / W/SLIDE OUT From 5-8385			1		?
. NS	563426	. HALL EFFECT SENSOR From 5-8385			1		
. NS	830122	. LED GREEN / 24VOLTS / L-41-1302-5100A From 5-8385			1		
. NS	562477	. CONNECTOR / DT SERIES / SH 4C / GRAY / DEUTSCH DT06-4S From 5-8385			1		
124	066080	SWITCH PROXIMITY ASSY / TEETH READER SLIDE OUT From 5-8385			1		?
126	476362	GUARD SENSOR From 5-8385			1		
		?) SEE DETAIL SCREEN					
		P) CALL ORDER DESK FOR SPECIFIC APPLICATION (V.I.N.)					

From 6-8806 To 8-9339		Date:07/2024	PAGE:Y2-2390-21
"SLIDE-OUT" - FRONT MECHANISM - INSTALLATION			

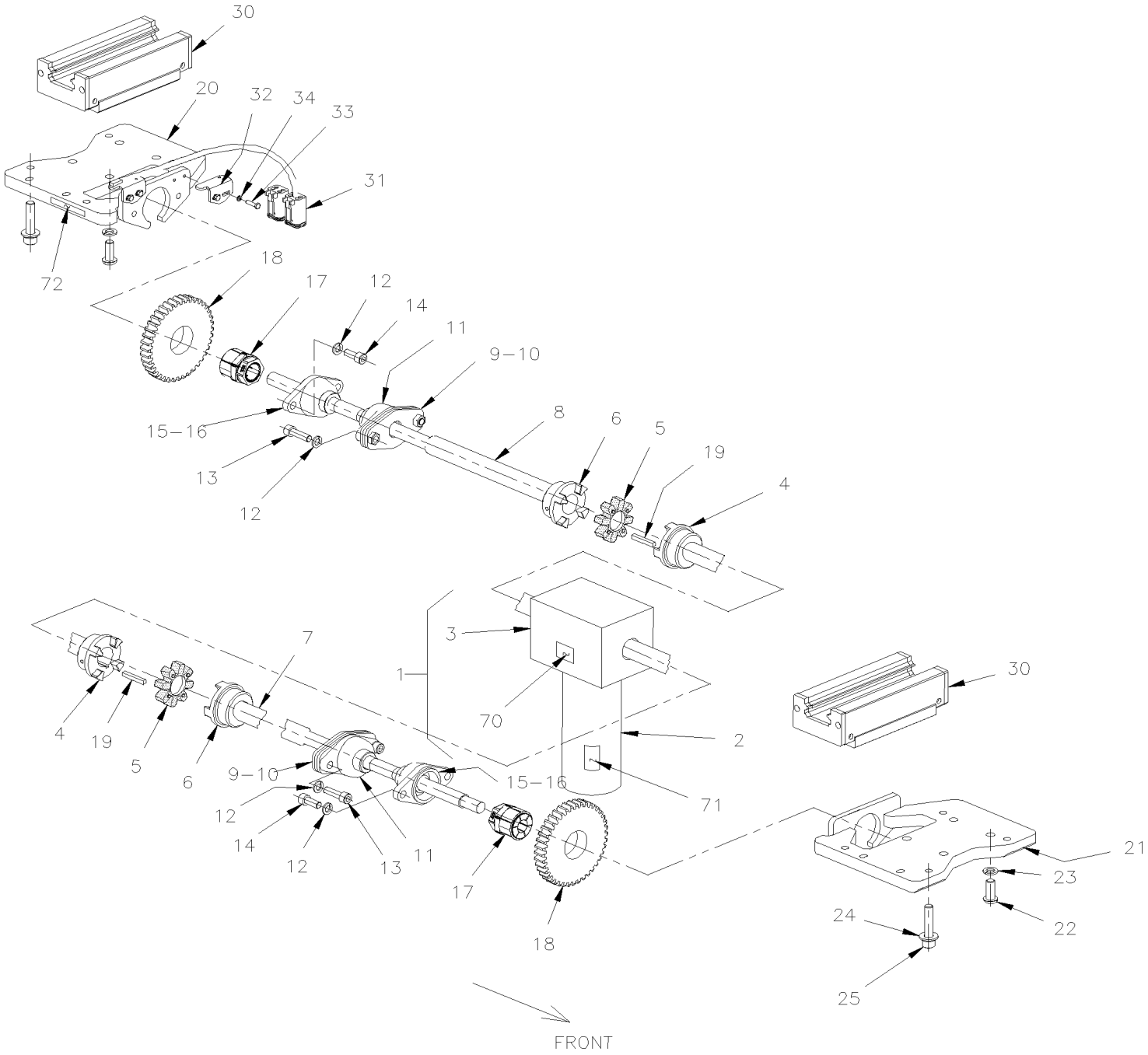

From 6-8806 To 8-9339		Date:07/2024	PAGE:Y2-2390-21
"SLIDE-OUT" - FRONT MECHANISM - INSTALLATION			

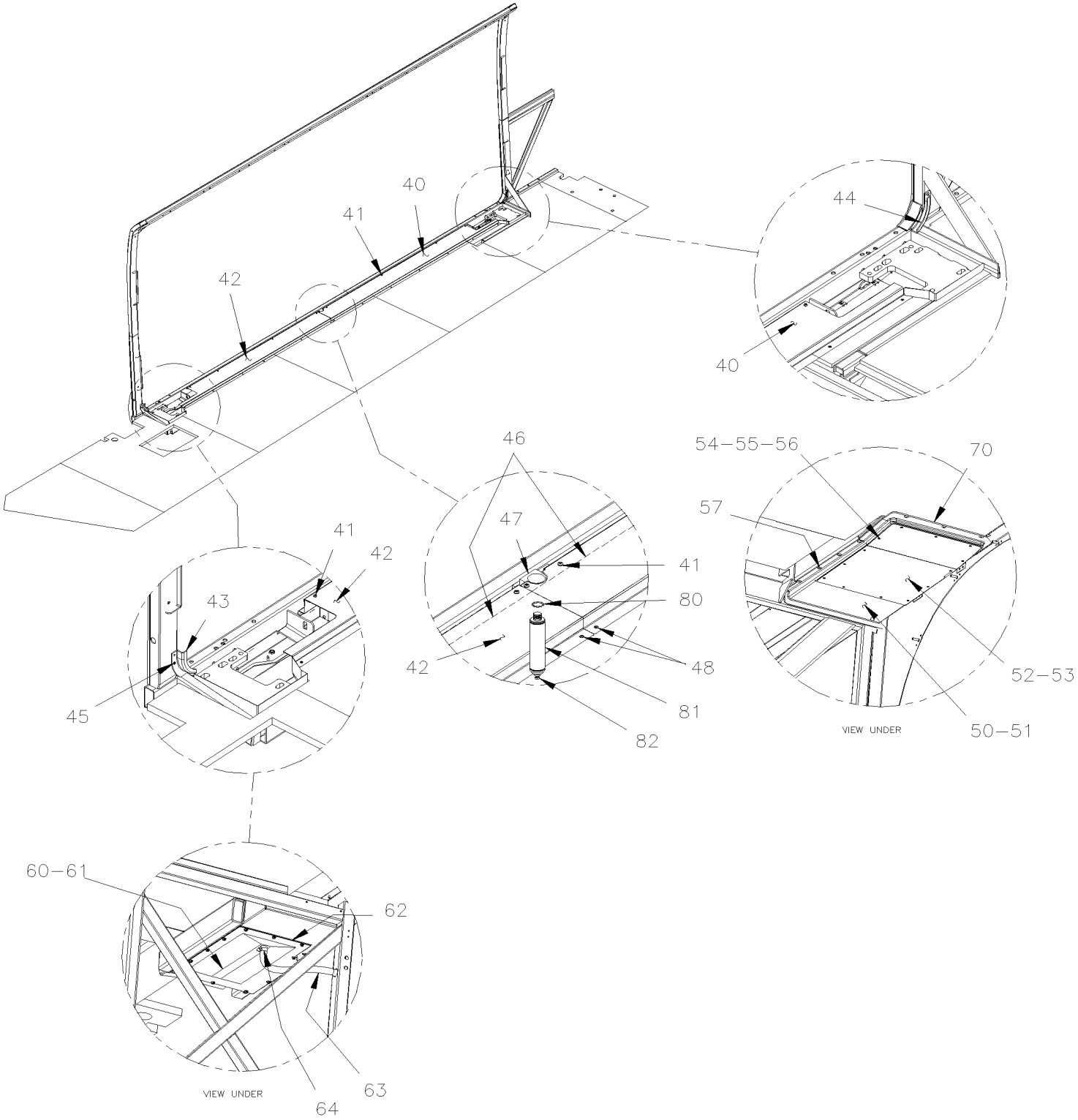

From 6-8806 To 8-9339		Date:07/2024	PAGE:Y2-2390-21

"SLIDE-OUT" - FRONT MECHANISM - INSTALLATION

Item#	Part	Description	XLII 45	XLII MTH40	XLII MTH45	XLII MTH45E	NOTES
1	066651	MOTOR 24V ASSY W/CONNECTOR			1	1	?
. NS	563936	. MOTOR 24V ASSY W/GEAR-BOX			1	1	
. . NS	563937	. . MOTOR 24V			1	1	
. . NS	563938	. . GEAR BOX RATIO 738/1			1	1	
. NS	561944	. CONNECTOR / CPC SERIES 3 / PH 3C / AMP 206426-1			1	1	
. NS	564831	. CONNECTOR BACKSHELL AMP CPC #17 - STD			1	1	
. NS	561698	. PIN TERMINAL 16-12 / POWER CONTACT / AMP 66261-4			2	2	
2	563936	. MOTOR 24V ASSY W/GEAR-BOX			1	1	
. NS	563937	. . MOTOR 24V			1	1	
. NS	563938	. . GEAR BOX RATIO 738/1			1	1	
3	563938	. GEAR BOX RATIO 738/1			1	1	
NS	505533	. KEY 6MM x 6MM x 40MM			2	2	
NS	5001450	SCREW CAP HEX M8-1.25x20 G10.9 DP			4	4	
NS	500035	WASHER LO SPT .317x.586x.078 SS			4	4	
4	505530	COUPLING SHAFT DRIVE 20MM I.D. / TYPE GS 28			2	2	
5	505529	SPIDER RUBBER / TYPE GS 28			2	2	
6	505528	COUPLING SHAFT DRIVE 1 1/8" I.D. / TYPE GS 28			2	2	
7	470138	SHAFT / FORWARD / 1980MM			1		
7	476490	SHAFT / FORWARD / 1925MM				1	
8	470136	SHAFT / BACKWARD / 1789MM			1		
8	476485	SHAFT / BACKWARD / 973MM				1	
9	470129	PLATE TORQUE			2	2	
10	470128	SPACER 3/16"			AR	AR	
11	507641	PILLOW BEARING ASSY			2	2	
NS	501499	GREASE FITTING 45º / 1/4-28			2	2	
NS	684754	GREASE OPTIMOL OLISTA / CARTRIGE 14Oz			AR	AR	
NS	477916	CLOSING PLATE SS 168MM x 94MM			2	2	
NS	477917	PLATE PLASTIC 76MM x 74MM			2	2	
NS	5001017	SCREW TC CAP HEXW #10-24x1/2 Z050			8	8	
NS	500964	WASHER FL .203x.500x.047 Z050			8	8	
NS	504511	GROMMET / .500x1.000x.062x.250x1.250			1	1	
12	502616	WASHER LO SPT 10.2x18.1x2.2 SS			8	8	
13	5001620	SCREW CAP HEXS M10-1.5X35 G10.9 G500			4	4	
14	5001616	SCREW CAP HEXS M10-1.5X25 G10.9 DP			4	4	
15	470116	PILLOW BEARING ASSY			2	2	
16	501490	GREASE FITTING / 1/8 NPT			1	1	
17	470118	COUPLING TORQUE			2	2	
18	470119	GEAR 5 1/4" W/40TH			2	2	
19	505527	KEY SQUARE 1/4" x 1/4" x 1 3/4"			2	2	
20	477752	BASE GUIDE ASSY FORWARD			1	1	
21	477753	BASE GUIDE ASSY BACKWARD			1	1	
22	5001621	SCREW CAP HEXS M12-1.75x55 G10.9 DP			8	8	

From 6-8806 To 8-9339		Date:07/2024	PAGE:Y2-2390-21

"SLIDE-OUT" - FRONT MECHANISM - INSTALLATION

Item#	Part	Description	XLII 45	XLII MTH40	XLII MTH45	XLII MTH45E	NOTES
22	5001615	SCREW CAP BUT HEXS M12-1.75x30 G10.9 G500			8	8	
23	500747	WASHER LO SPT 12.2x21.1x2.5 N500			8	8	
24	5001622	SCREW CAP HEXS M12-1.75x40 G10.9 DP			8	8	
25	5001623	NUT HEX JAM M12x1.75 SS			8	8	
NS	684420	SCREW MARKER LOCK 90ml			AR	AR	
30	470107	GUIDE			2	2	
NS	507642	DUMMY RAIL GUIDE LINEAR BEARING 254MM / USE WITH 470107 ONLY			AR	AR	W
NS	685232	RAIL GUIDE EXTENSION TOOL L.H.			AR	AR	T
NS	685233	RAIL GUIDE EXTENSION TOOL R.H.			AR	AR	T
31	066270	LIMITING REED SWITCH ASSY W/LED S.P.D.T. / W/SLIDE OUT To 6-8935			2	2	?
. NS	563426	. HALL EFFECT SENSOR To 6-8935			1	1	
. NS	563452	. LED GREEN / 5VOLTS To 6-8935			1	1	
. NS	562477	. CONNECTOR / DT SERIES / SH 4C / GRAY / DEUTSCH DT06-4S To 6-8935			1	1	
31	066852	LIMITING REED SWITCH ASSY W/LED S.P.D.T. / W/SLIDE OUT From 6-8936			2	2	?
. NS	563426	. HALL EFFECT SENSOR From 6-8936			1	1	
. NS	563452	. LED GREEN / 5VOLTS From 6-8936			1	1	
. NS	562477	. CONNECTOR / DT SERIES / SH 4C / GRAY / DEUTSCH DT06-4S From 6-8936			1	1	
32	477829	SUPPORT LIMITING READ SWITCH			1	1	
33	5001146	SCREW CAP HEX M5-0.8x20 SS BK			4	4	
34	500804	WASHER FL .203x.500x.047 N500			4	4	
40	328175	PROTECTOR PLATE FORWARD			1		
40	328219	PROTECTOR PLATE FORWARD				1	
41	500799	SCREW TC PAN PH #8-32x3/8 N500			9	9	
42	328176	PROTECTOR PLATE BACKWARD			1		
42	328220	PROTECTOR PLATE BACKWARD				1	
43	477748	GUTTER MOULDING BACKWARD			1	1	
44	477747	GUTTER MOULDING FORWARD			1	1	
45	504379	RIVET POP DOME OE 3/16x1/4 SS			AR	AR	
46	506227	TAPE RUB ADH1 CC POL 1/16" x 3/4" x 100' / GREY 2520			AR	AR	
47	328224	GASKET JOINT			1	1	
48	5001349	SCREW WO TR PH #8x7/8			13	13	
50	477740P	ACCESS PANEL ASSY / FORWARD			1	1	
51	477737	. RECEPTACLE BOX			1	1	
52	477738	. ACCESS PANEL			1	1	
53	477739	. GASKET			1	1	
54	481249	. NUT			14	14	
55	5001605	. SCREW TP HEXW SLT #12x3/4 SS			14	14	
56	5001686	. WASHER FL SEAL .218x.625x20GA SS			14	14	
57	504248	RIVET CHY Q PRDG 3/16x1/4 SS			8	8	
60	Call order desk	ACCESS PANEL ASSY W/DRAIN / BACKWARD			1		P
60	Call order desk	ACCESS PANEL ASSY W/DRAIN / BACKWARD				1	P
61	477885	. ACCESS PANEL			1		

From 6-8806 To 8-9339		Date:07/2024	PAGE:Y2-2390-21

"SLIDE-OUT" - FRONT MECHANISM - INSTALLATION

Item#	Part	Description	XLII 45	XLII MTH40	XLII MTH45	XLII MTH45E	NOTES
61	477941	. ACCESS PANEL				1	
62	477886	. GASKET			1		
62	477943	. GASKET				1	
63	503707	HOSE / PVC REINFORCED 1/2" I.D. 100' / S.L.			AR	AR	
64	504230	HOSE CLAMP / 3/8"-7/8" SS / HS-6			1	1	
NS	680532	SEALANT SIKA #221 / GREY / 310ml CARTRIDGE			AR	AR	
NS	684517	ADHESIVE SIMSON #ISR 70-03 / GREY / 310ml CARTRIDGE			AR	AR	
70	477987	DECAL " ON OVERRIDE MUST BE LOW TORQUE…"			1	1	
71	477989	DECAL "SEAL MUST BE DEFLATED…"			1	1	
NS	477988	DECAL "PAT PENDING"			1	1	
72	477990	DECAL "THIS SLIDE-OUT PLATE IS FACTORY.."			1	1	
NS	477991	DECAL "CAUTION" DO NOT MAKE ANY MODI.."			1	1	
80	507345	O-RING / ORS FITTING / #16 NEO			1	1	
81	642027	CYLINDER 1 1/16"			1	1	
82	641126	MALE CONNECTOR / PUSH-IN FITTING / #2x1/8NPT-M BR			1	1	
		T) THOSE RAIL EXTENTION TOOLS ARE FOR EASY REMOVED SLIDE-OUT FROM STRUCTURE					
		W) "WARNING" YOUR REQUIRE THIS DUMMY BEFORE REMOVE THE SLIDE-OUT FROM STRUCTURE"AVERTISSEMENT"					
		?) SEE DETAIL SCREEN					
		P) CALL ORDER DESK FOR SPECIFIC APPLICATION (V.I.N.)					

From Y-7046 To 6-8805		Date:07/2024	PAGE:Y2-2390-30
"SLIDE-OUT" - REAR MECHANISM INSTALLATION			

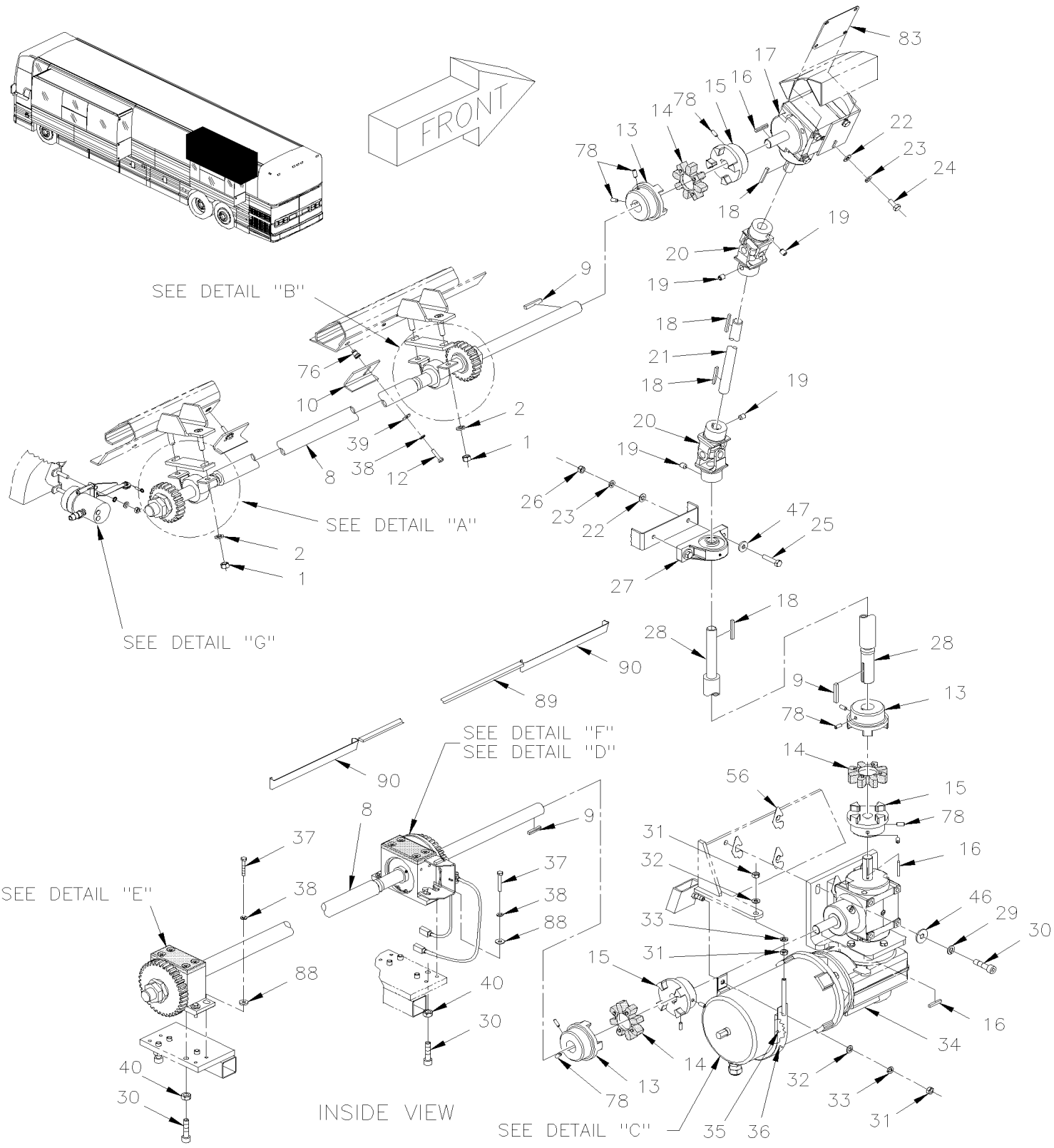

From Y-7046 To 6-8805		Date:07/2024	PAGE:Y2-2390-30
"SLIDE-OUT" - REAR MECHANISM INSTALLATION			

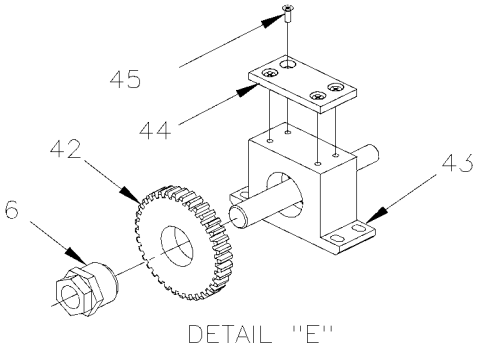

DETAIL "E"

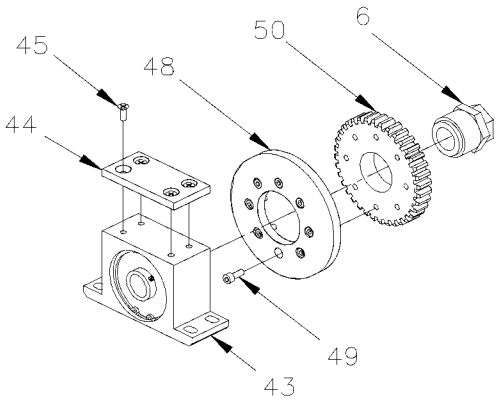

DETAIL "F"

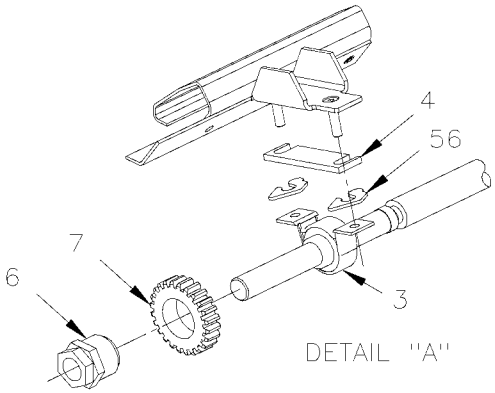

DETAIL "A"

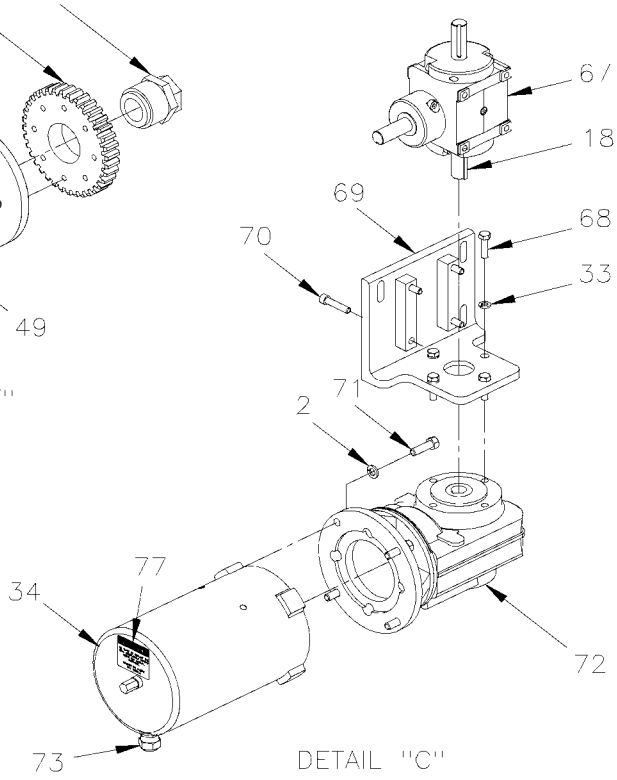

DETAIL "C"

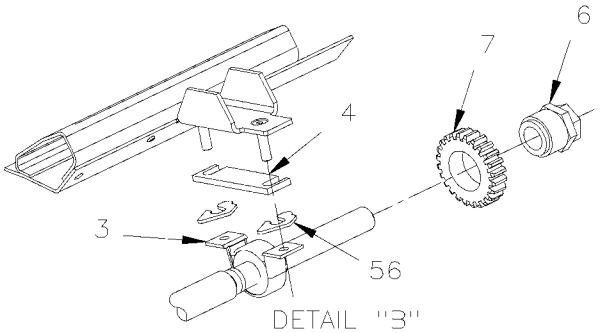

DETAIL "B"

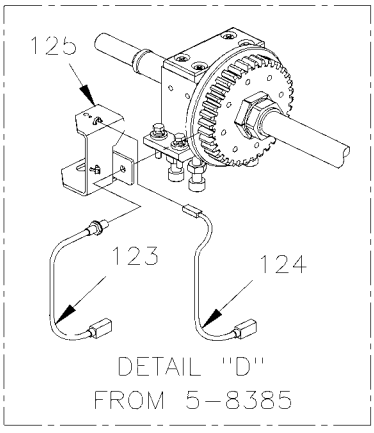

DETAIL "D"
FROM 5-8385

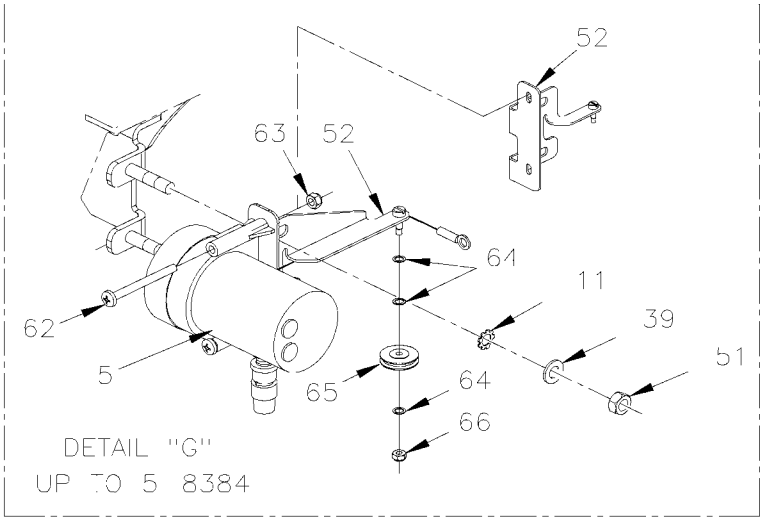

DETAIL "G"
UP TO 5 8384

INSIDE VIEW

From Y-7046 To 6-8805		Date:07/2024	PAGE:Y2-2390-30

"SLIDE-OUT" - REAR MECHANISM INSTALLATION

Item#	Part	Description	XLII 45	XLII MTH40	XLII MTH45	XLII MTH45E	NOTES
1	500783	NUT HEX 3/8-16 Z050			4		
2	500478	WASHER LO SPT .380x.683x.094 Z050			8		
3	690315	PILLOW BLOCK LPB1 To 4-8251			2		
3	507631	PILLOW BLOCK LPB1 From 4-8252			2		
. NS	5000101	. PILLOW BLOCK From 4-8252			1		
. NS	5000100	. BEARING 1PO ID x 52MM OD From 4-8252			1		
4	690019	SPACER 6.35MM To 4-8251			2		
4	479128	SPACER 6.35MM From 4-8252			2		
5	690388	LINEAR POSITION TRANDUCER To 4-8251			1		
5	563346	LINEAR POSITION TRANDUCER From 4-8252 To 5-8384			1		
6	690313	CPG TRANTORQUE GT To 4-8251			4		
6	505523	CPG TRANTORQUE GT From 4-8252			4		
7	690075	TOP GEAR To 4-8251			2		
7	479115	TOP GEAR From 4-8252			2		
8	479117	UPPER SHAFT			1		
8	690047	UPPER SHAFT To 3-8164			2		
8	479117	UPPER SHAFT From 4-8165			1		
8	479104	LOWER SHAFT From 4-8165			1		
9	690006	PARALLEL KEY To 4-8251			3		
9	476160	PARALLEL KEY From 4-8252			3		
10	690043	UPPER LIMITING KEY To 4-8251			1		
10	476102	UPPER LIMITING KEY From 4-8252			1		
11	690267	WASHER LO SERR 6.1x16.0x0.9 ZP To 4-8251			7		
11	500356	WASHER LO SERR 6.1x16.0x0.9 N500 From 4-8252			7		
12	5001209	SCREW CAP HEX M6-1.0x25 G8.8 Z050			5		
13	690016	COUPLING SHAFT DRIVE 1" I.D. / TYPE GS 38 To 3-7929			3		
13	407513	COUPLING SHAFT DRIVE 1" I.D. / TYPE GS 38 From 3-7930			3		
. NS	502506	. SCREW SET HEXS CUP M4-0.7x16 From 3-7930			1		
. NS	5001282	. SCREW SET HEXS CUP 1/4-20x5/8 From 3-7930			1		
NS	502512	SCREW CAP HEXS 5/16-18x1 1/2 ZP From 3-7930			1		
14	690365	SPIDER RUBBER / TYPE GS 38 To 4-8251			3		
14	507632	SPIDER RUBBER / TYPE GS 38 From 4-8252			1		
15	690017	COUPLING SHAFT DRIVE 3/4" I.D. / TYPE GS 38 To 3-7929			3		
15	407512	COUPLING SHAFT DRIVE 3/4" I.D. / TYPE GS 38 From 3-7930			3		
. NS	502503	. SCREW CAP HEXS 5/16-18x1 1/2 N500 From 3-7930			1		
. NS	5001282	. SCREW SET HEXS CUP 1/4-20x5/8 From 3-7930			1		
15	502512	SCREW CAP HEXS 5/16-18x1 1/2 ZP From 3-7930			1		
NS	502503	SCREW CAP HEXS 5/16-18x1 1/2 N500			1		
16	690233	STEP KEY To 4-8251			3		
16	476039	STEP KEY From 4-8252			3		
17	690346	RIGHT ANGLE GEARBOX UPPER RATIO 1:1 To 4-8251			1		
17	970299	RIGHT ANGLE GEARBOX UPPER RATIO 1:1 From 4-8252			1		

From Y-7046 To 6-8805		Date:07/2024	PAGE:Y2-2390-30

"SLIDE-OUT" - REAR MECHANISM INSTALLATION

Item#	Part	Description	XLII 45	XLII MTH40	XLII MTH45	XLII MTH45E	NOTES
18	690007	PARALLEL KEY To 4-8251			4		
18	476037	KEY 3/16" X 3/16" From 4-8252			4		
19	5001167	SCREW SET HEXS CUP 3/8-16x1/2			4		
20	505525	U-JOINT ASSY 3/4" O.D.SHAFT X 5" To 3-8004			2		
20	475977	U-JOINT ASSY 3/4" O.D.SHAFT X 5" From 3-8005			2		
. NS	476066	. "C" CLAMP From 3-8005			2		
. NS	500239	. SCREW CAP HEXS 1/4-20x1 ZP From 3-8005			4		
. NS	500319	. SCREW SET HEXS CUP 5/16-18x1/2 From 3-8005			2		
NS	690320	KIT, CROSS & BEARING 15/16" O.D. X 2 1/4"			2		
21	690040	UPPER VERTICAL SHAFT To 4-8251			1		
21	479127	UPPER VERTICAL SHAFT From 4-8252			1		
22	500441	WASHER FL .312x.734x.065 Z050			6		
23	500476	WASHER LO SPT .317x.586x.078 Z050			6		
24	5001263	SCREW CAP HEXS 5/16-18x1 ZP			4		
25	500183	SCREW CAP HEX 5/16-18x1 1/2 G5 PT Z050			2		
26	500778	NUT HEX 5/16-18 N500			2		
27	690317	PILLOW BLOCK NP 3/4 To 4-8251			1		
27	507630	PILLOW BLOCK NP 3/4 From 4-8252			1		
28	690046	LOWER VERTICAL SHAFT To 4-8251			1		
28	479118	LOWER VERTICAL SHAFT From 4-8252			1		
29	500257	WASHER LO SPT 10.2x18.1x2.2 Z050			3		
30	500317	SCREW CAP HEXS M10-1.5x45 G8.8 ZP			11		
31	502543	NUT HEX M8-1.25 Z050			3		
32	500874	WASHER FL 8.4x17.0x1.6 Z050			2		
33	5001209	SCREW CAP HEX M6-1.0x25 G8.8 Z050			6		
34	690363	MOTOR 1/3 HP To 4-8251			1		
34	563315	MOTOR 1/3 HP From 4-8252			1		
35	690338	SELF SEALING SPONGE RUBBER 1" X 5/16" TH.			1		
36	690100	STRAP ASSY To 4-8251			1		
36	476074	STRAP ASSY From 4-8252			1		
37	502793	SCREW CAP HEX M6-1.0x45 G8.8 Z050			8		
38	502564	WASHER LO SPT 6.1x11.8x1.6 Z050			8		
39	690261	WASHER FL 6.4x12.0x1.6 SS To 4-8251			10		
39	502573	WASHER FL 6.4x12.5x1.6 SS From 4-8252			10		
40	500256	NUT HEX M10-1.5 Z050			8		
41	690045	LOWER SHAFT			1		
42	690078	GEAR To 4-8251			1		
42	479103	GEAR From 4-8252			1		
43	690222	PILLOW BLOCK ASSY W/BEARING & SKID PAD To 4-8251			2		
43	479123	PILLOW BLOCK ASSY W/BEARING & SKID PAD From 4-8252 To 5-8384			2		
43	476399	PILLOW BLOCK ASSY W/BEARING & SKID PAD / WITH 2 HOLES TO INSTALL REE From 5-8385			2		
44	690037	SLIDING PAD To 4-8251			2		

From Y-7046 To 6-8805		Date:07/2024	PAGE:Y2-2390-30

"SLIDE-OUT" - REAR MECHANISM INSTALLATION

Item#	Part	Description	XLII 45	XLII MTH40	XLII MTH45	XLII MTH45E	NOTES
44	479101	SLIDING PAD			2		
45	5001198	SCREW MA FL PH M6-1.0x16 Z050			8		
46	502644	WASHER FL 10.5x30.0x2.5 Z050			3		
47	500441	WASHER FL .312x.734x.065 Z050			2		
48	690076	GUIDE WHEEL To 4-8251			1		
48	479102	GUIDE WHEEL From 4-8252			1		
49	502531	SCREW CAP HEX M6-1.0x16 G8.8 Z050			8		
50	690077	GEAR To 4-8251			1		
50	479105	GEAR From 4-8252			1		
51	502511	NUT HEX NYRT M6-1.0 Z050 To 5-8384			2		
52	690070	TRANSDUCER LINEAR SUPPORT To 2-7773			1		
52	065850	TRANSDUCER LINEAR SUPPORT From 2-7774 To 5-8384			1		
56	690056	SPACER 0.015" To 4-8251			AR		
56	144636	SPACER 0.015" From 4-8252			AR		
56	690057	SPACER 0.031" To 4-8251			AR		
56	144637	SPACER 0.031" From 4-8252			AR		
56	690058	SPACER 0.062" To 4-8251			AR		
56	144638	SPACER 0.062" From 4-8252			AR		
56	690059	SPACER 0.125" To 4-8251			AR		
56	144639	SPACER 0.125" From 4-8252			AR		
56	690404	SPACER 0,187" To 4-8251			AR		
56	144640	SPACER 0,187" From 4-8252			AR		
56	690403	SPACER 0,250" To 4-8251			AR		
56	144641	SPACER 0,250" From 4-8252			AR		
62	690270	SCREW MA PAN PH M4-0.7x45 ZP To 4-8251			2		
62	502921	SCREW MA PAN PH M4-0.7x45 Z050 From 4-8252 To 5-8384			2		
63	500590	NUT HEX NYRT M4-0.7 Z050 To 5-8384			2		
64	690278	SHIM RND 1/64" To 4-8251			3		
64	502923	SHIM RND 1/64" From 4-8252 To 5-8384			3		
65	690279	IDLER PULLEY To 4-8251			1		
65	502924	IDLER PULLEY From 4-8252 To 5-8384			1		
66	500425	NUT HEX NYRT #4-40 SS To 5-8384			1		
67	690345	RIGHT ANGLE GEARBOX LOWER RATIO 1:1.5 To 4-8251			1		
67	970298	RIGHT ANGLE GEARBOX LOWER RATIO 1:1.5 From 4-8252			1		
68	500544	SCREW CAP HEX M8-1.25x30 G8.8 Z050			4		
69	690044	SUPPORT ASSY			1		
70	502512	SCREW CAP HEXS 5/16-18x1 1/2 ZP			4		
71	500192	SCREW CAP HEX 3/8-16x1 1/4 G5 Z050			4		
72	690314	REDUCER 140:1 To 4-8251			1		
72	970297	REDUCER 140:1 From 4-8252			1		
73	690337	CONNECTOR STRAIGHT-THRU / HEYCO #3231 / BLK 1/2NPT-M / .170-.450 To 4-8251			1		
73	563336	CONNECTOR STRAIGHT-THRU / HEYCO #3231 / BLK 1/2NPT-M / .170-.450 From 4-8252			1		

From Y-7046 To 6-8805		Date:07/2024	PAGE:Y2-2390-30

"SLIDE-OUT" - REAR MECHANISM INSTALLATION

Item#	Part	Description	XLII 45	XLII MTH40	XLII MTH45	XLII MTH45E	NOTES
76	690259	NUT INS TYPE "A-L" OE M6-1.0 0.7-4.2 ZP To 4-8251			5		
76	502842	NUT INS TYPE "A-L" OE M6-1.0 0.7-4.2 Z050 From 4-8252			5		
77	690236	DECAL "MANUAL OPERATION" To 4-8251			2		
77	476108	DECAL "MANUAL OPERATION" From 4-8252			2		
78	5001282	SCREW SET HEXS CUP 1/4-20x5/8			12		
NS	680038	THREAD LOCKER LOCTITE #243 / BLUE / 50ml			AR		
NS	N25539	THREAD LOCKER LOCTITE #262 / RED / 250ml			AR		
NS	682176	SEALANT SIKA #221 / BLACK / 310ml CARTRIDGE			AR		
83	690245	PLATE To 4-8251			1		
83	479129	PLATE From 4-8252			1		
88	690261	WASHER FL 6.4x12.0x1.6 SS To 4-8251			AR		
88	502573	WASHER FL 6.4x12.5x1.6 SS From 4-8252			AR		
89	690383	TAPE RUB ADH1 NEO 3/16" x 1/2" x 40' / BLACK B3C To 4-8251			AR		
89	506002	TAPE RUB ADH1 CC POL 3/16" x 1/2" x 40' / GREY 2520 From 4-8252			AR		
90	221266	GUTTER To 4-8160			2		
90	221270	GUTTER / BACKWARD From 4-8165			1		
90	221271	GUTTER / FOWARD From 4-8165			1		
123	066080	SWITCH PROXIMITY ASSY / TEETH READER SLIDE OUT From 5-8385			1		?
124	066079	LIMITING REED SWITCH ASSY W/LED S.P.D.T. / W/SLIDE OUT From 5-8385			1		?
. NS	563426	. HALL EFFECT SENSOR From 5-8385			1		
. NS	830122	. LED GREEN / 24VOLTS / L-41-1302-5100A From 5-8385			1		
. NS	562477	. CONNECTOR / DT SERIES / SH 4C / GRAY / DEUTSCH DT06-4S From 5-8385			1		
125	066033	SENSOR SUPPORT From 5-8385			1		
		?) SEE DETAIL SCREEN					

From 6-8806 To 8-9339		Date:07/2024	PAGE:Y2-2390-31
"SLIDE-OUT" - REAR MECHANISM INSTALLATION			

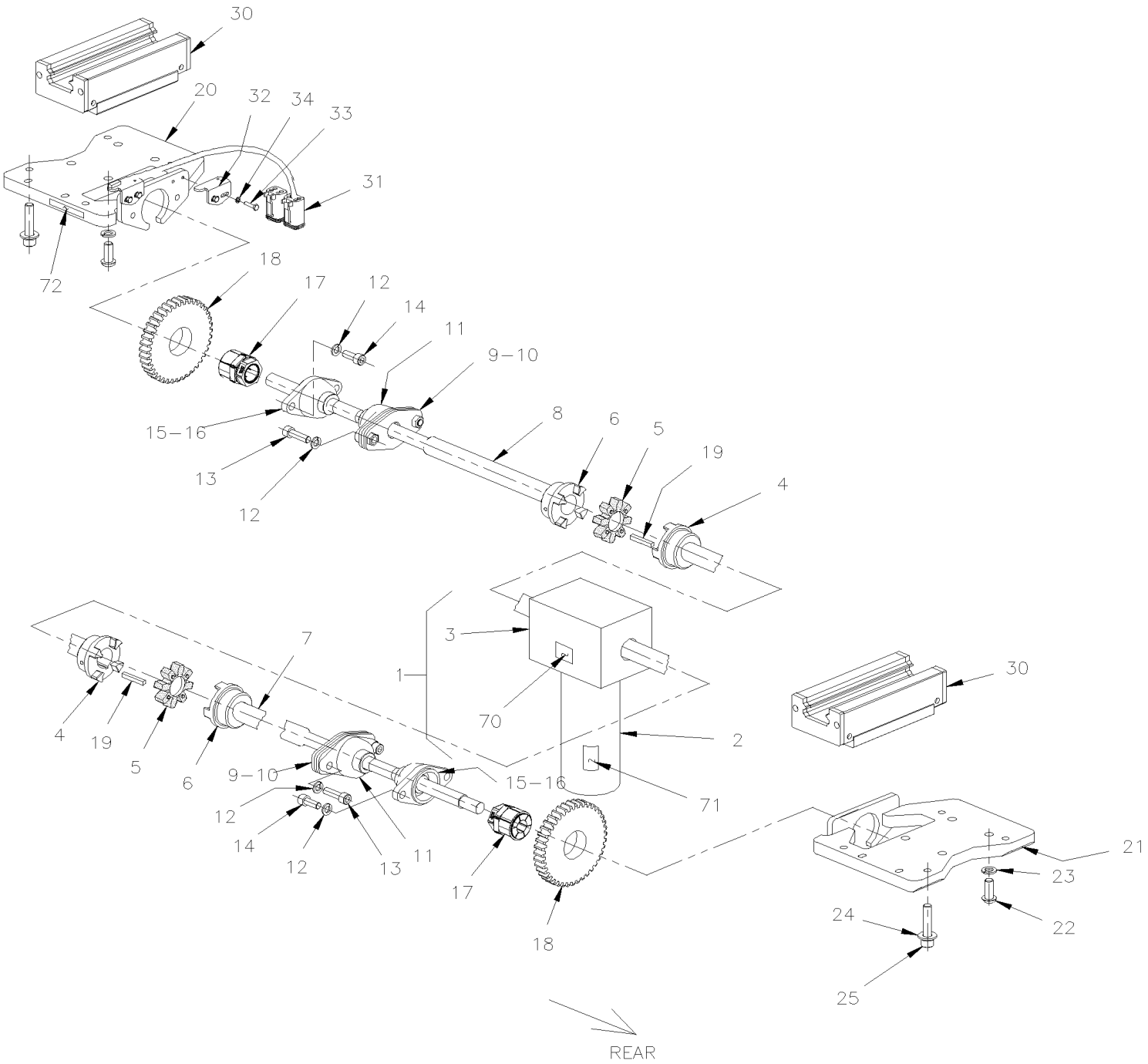

From 6-8806 To 8-9339		Date:07/2024	PAGE:Y2-2390-31
"SLIDE-OUT" - REAR MECHANISM INSTALLATION			

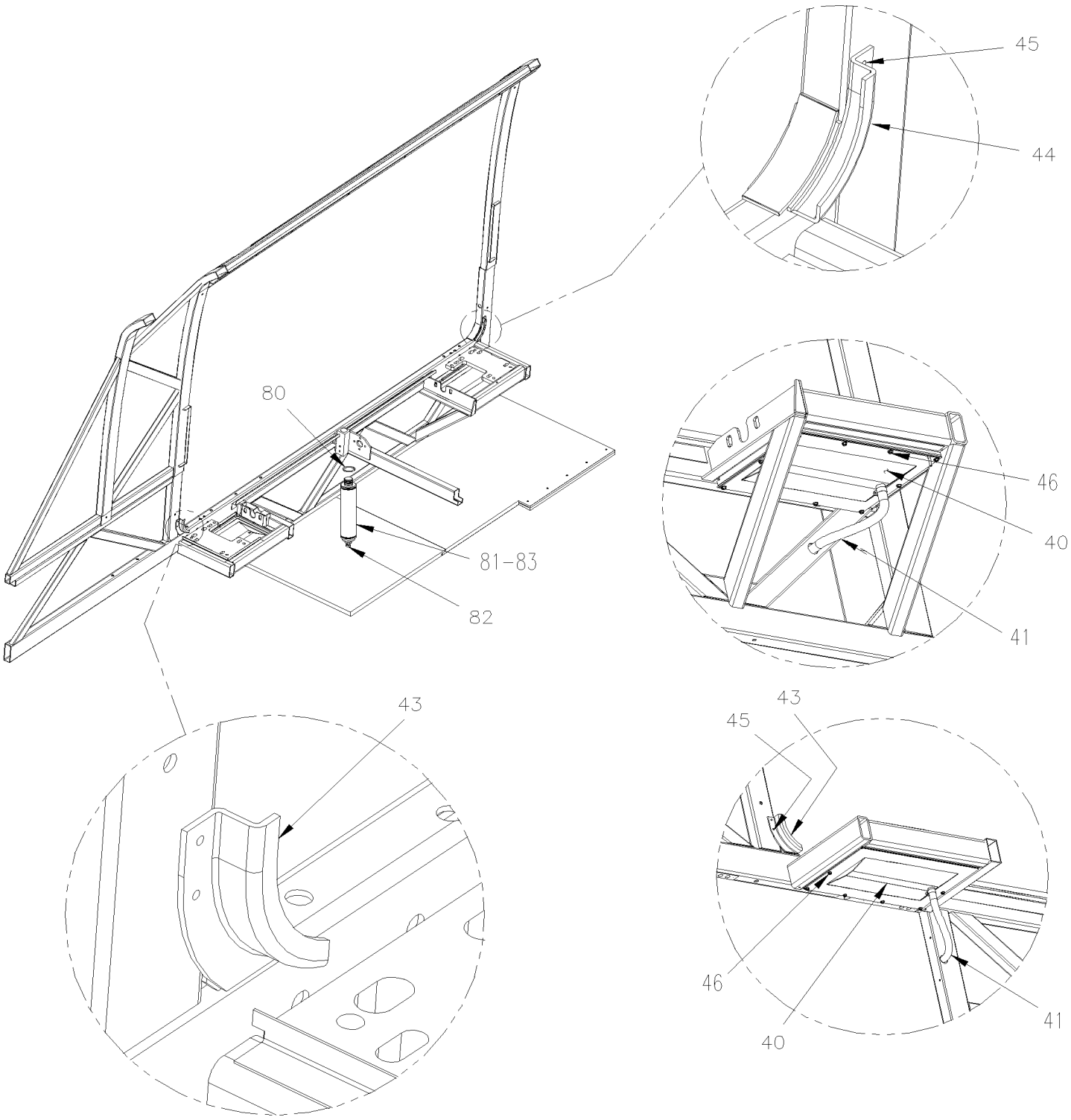

From 6-8806 To 8-9339		Date:07/2024	PAGE:Y2-2390-31

"SLIDE-OUT" - REAR MECHANISM INSTALLATION

Item#	Part	Description	XLII 45	XLII MTH40	XLII MTH45	XLII MTH45E	NOTES
1	066651	MOTOR 24V ASSY W/CONNECTOR To 7-9021			1		? A
. NS	563936	. MOTOR 24V ASSY W/GEAR-BOX To 7-9021			1		A
. . NS	563937	. . MOTOR 24V To 7-9021			1		A
. . NS	563938	. . GEAR BOX RATIO 738/1 To 7-9021			1		A
. NS	561944	. CONNECTOR / CPC SERIES 3 / PH 3C / AMP 206426-1 To 7-9021			1		A
. NS	564831	. CONNECTOR BACKSHELL AMP CPC #17 - STD To 7-9021			1		A
. NS	561698	. PIN TERMINAL 16-12 / POWER CONTACT / AMP 66261-4 To 7-9021			2		A
1	066969	MOTOR 24V ASSY W/CONNECTOR From 7-9022			1		?
. NS	564036	. MOTOR 24V ASSY W/GEAR-BOX From 7-9022			1		
. . NS	563937	. . MOTOR 24V From 7-9022			1		
. . NS	563938	. . GEAR BOX RATIO 738/1 From 7-9022			1		
. NS	561944	. CONNECTOR / CPC SERIES 3 / PH 3C / AMP 206426-1 From 7-9022			1		
. NS	561655	. CABLE CLAMP / CPC / #17 / AMP 206070-8 From 7-9022			1		
. NS	561698	. PIN TERMINAL 16-12 / POWER CONTACT / AMP 66261-4 From 7-9022			2		
2	563936	. MOTOR 24V ASSY W/GEAR-BOX To 7-9021			1		
. NS	563937	. . MOTOR 24V To 7-9021			1		
. NS	563938	. . GEAR BOX RATIO 738/1 To 7-9021			1		
2	564036	. MOTOR 24V ASSY W/GEAR-BOX From 7-9022			1		
. NS	563937	. . MOTOR 24V From 7-9022			1		
. NS	563938	. . GEAR BOX RATIO 738/1 From 7-9022			1		
3	563938	. GEAR BOX RATIO 738/1			1		
NS	505533	. KEY 6MM x 6MM x 40MM			2		
NS	5001450	SCREW CAP HEX M8-1.25x20 G10.9 DP			4		
NS	500035	WASHER LO SPT .317x.586x.078 SS			4		
4	505530	COUPLING SHAFT DRIVE 20MM I.D. / TYPE GS 28			2		
5	505529	SPIDER RUBBER / TYPE GS 28			2		
6	505528	COUPLING SHAFT DRIVE 1 1/8" I.D. / TYPE GS 28			2		
7	470144	SHAFT 859MM / BACKWARD			1		
8	470141	SHAFT 776MM / FORWARD			1		
9	470129	PLATE TORQUE			2		
10	470128	SPACER 3/16"			AR		
11	507641	PILLOW BEARING ASSY			2		
NS	501499	GREASE FITTING 45º / 1/4-28			2		
NS	684754	GREASE OPTIMOL OLISTA / CARTRIGE 14Oz			AR		
12	5001620	SCREW CAP HEXS M10-1.5X35 G10.9 G500			4		
13	502616	WASHER LO SPT 10.2x18.1x2.2 SS			4		
14	5001616	SCREW CAP HEXS M10-1.5X25 G10.9 DP			4		
15	470116	PILLOW BEARING ASSY			2		
16	501490	GREASE FITTING / 1/8 NPT			1		
17	470118	COUPLING TORQUE			2		
18	470119	GEAR 5 1/4" W/40TH			2		
19	505527	KEY SQUARE 1/4" x 1/4" x 1 3/4"			2		

From 6-8806 To 8-9339		Date:07/2024	PAGE:Y2-2390-31

"SLIDE-OUT" - REAR MECHANISM INSTALLATION

Item#	Part	Description	XLII 45	XLII MTH40	XLII MTH45	XLII MTH45E	NOTES
20	477752	BASE GUIDE ASSY FORWARD			1		
21	477753	BASE GUIDE ASSY BACKWARD			1		
22	5001621	SCREW CAP HEXS M12-1.75x55 G10.9 DP			1		
22	5001615	SCREW CAP BUT HEXS M12-1.75x30 G10.9 G500			8		
23	500747	WASHER LO SPT 12.2x21.1x2.5 N500			8		
24	5001622	SCREW CAP HEXS M12-1.75x40 G10.9 DP			8		
25	5001623	NUT HEX JAM M12x1.75 SS			8		
NS	684420	SCREW MARKER LOCK 90ml			AR		
30	470107	GUIDE			2		
NS	507642	DUMMY RAIL GUIDE LINEAR BEARING 254MM / USE WITH 470107 ONLY			AR		W
NS	685232	RAIL GUIDE EXTENSION TOOL L.H.			AR		T
NS	685233	RAIL GUIDE EXTENSION TOOL R.H.			AR		T
31	066270	LIMITING REED SWITCH ASSY W/LED S.P.D.T. / W/SLIDE OUT To 6-8935			2		?
. NS	563426	. HALL EFFECT SENSOR To 6-8935			1		
. NS	563452	. LED GREEN / 5VOLTS To 6-8935			1		
. NS	562477	. CONNECTOR / DT SERIES / SH 4C / GRAY / DEUTSCH DT06-4S To 6-8935			1		
31	066852	LIMITING REED SWITCH ASSY W/LED S.P.D.T. / W/SLIDE OUT From 6-8936			2		?
. NS	563426	. HALL EFFECT SENSOR From 6-8936			1		
. NS	563452	. LED GREEN / 5VOLTS From 6-8936			1		
. NS	562477	. CONNECTOR / DT SERIES / SH 4C / GRAY / DEUTSCH DT06-4S From 6-8936			1		
32	470120	SUPPORT LIMITING READ SWITCH			2		
33	5001146	SCREW CAP HEX M5-0.8x20 SS BK			4		
34	500804	WASHER FL .203x.500x.047 N500			4		
40	Call order desk	ACCESS PANEL ASSY W/DRAIN / FORWARD			1		P
40	Call order desk	ACCESS PANEL ASSY W/DRAIN / BACKWARD			1		P
40	477888	. ACCESS PANEL			1		
40	477892	. ACCESS PANEL / BACKWARD			1		
NS	477889	. GASKET			2		
41	503707	. HOSE / PVC REINFORCED 1/2" I.D. 100' / S.L.			AR		
NS	504230	. HOSE CLAMP / 3/8"-7/8" SS / HS-6			2		
43	477748	GUTTER MOULDING BACKWARD			1		
44	477747	GUTTER MOULDING FORWARD			1		
45	504379	RIVET POP DOME OE 3/16x1/4 SS			4		
NS	680532	SEALANT SIKA #221 / GREY / 310ml CARTRIDGE			AR		
NS	684517	ADHESIVE SIMSON #ISR 70-03 / GREY / 310ml CARTRIDGE			AR		
46	500526	SCREW TP CAP HEXW #12x3/4 N500			16		
NS	5001686	WASHER FL SEAL .218x.625x20GA SS			16		
70	477987	DECAL " ON OVERRIDE MUST BE LOW TORQUE…"			1		
71	477989	DECAL "SEAL MUST BE DEFLATED…" To 9-9021			1		
71	478251	DECAL "SEAL MUST BE DEFLATED…" From 9-9022			1		
NS	477988	DECAL "PAT PENDING"			1		
72	477990	DECAL "THIS SLIDE-OUT PLATE IS FACTORY.."			1		

From 6-8806 To 8-9339		Date:07/2024	PAGE:Y2-2390-31

"SLIDE-OUT" - REAR MECHANISM INSTALLATION

Item#	Part	Description	XLII 45	XLII MTH40	XLII MTH45	XLII MTH45E	NOTES
NS	477991	DECAL "CAUTION" DO NOT MAKE ANY MODI.."			1		
80	507345	O-RING / ORS FITTING / #16 NEO			1		
81	642027	CYLINDER 1 1/16"			1		
82	641126	MALE CONNECTOR / PUSH-IN FITTING / #2x1/8NPT-M BR			1		
83	470133	SAFETY PIN 1 1/4" O.D. x 120MM To 8-9331			1		
83	470182	SAFETY PIN 1 1/4" O.D. x 116MM From 8-9332			1		
		A) THIS MOTOR CHANGE POSITION YOU COULD BE CHANGE POSITION IF YOU REVERSE WIRE CABLE IN CONNECTOR					
		T) THOSE RAIL EXTENTION TOOLS ARE FOR EASY REMOVED SLIDE-OUT FROM STRUCTURE					
		W) WARNING YOU REQUIRE THIS DUMMY BEFORE REMOVE SLIDE-OUT FROM STRUCTURE					
		?) SEE DETAIL SCREEN					
		P) CALL ORDER DESK FOR SPECIFIC APPLICATION (V.I.N.)					

From Y-7046 To 6-8805		Date:07/2024	PAGE:Y2-2390-40
"SLIDE-OUT" - BED SUPPORT			

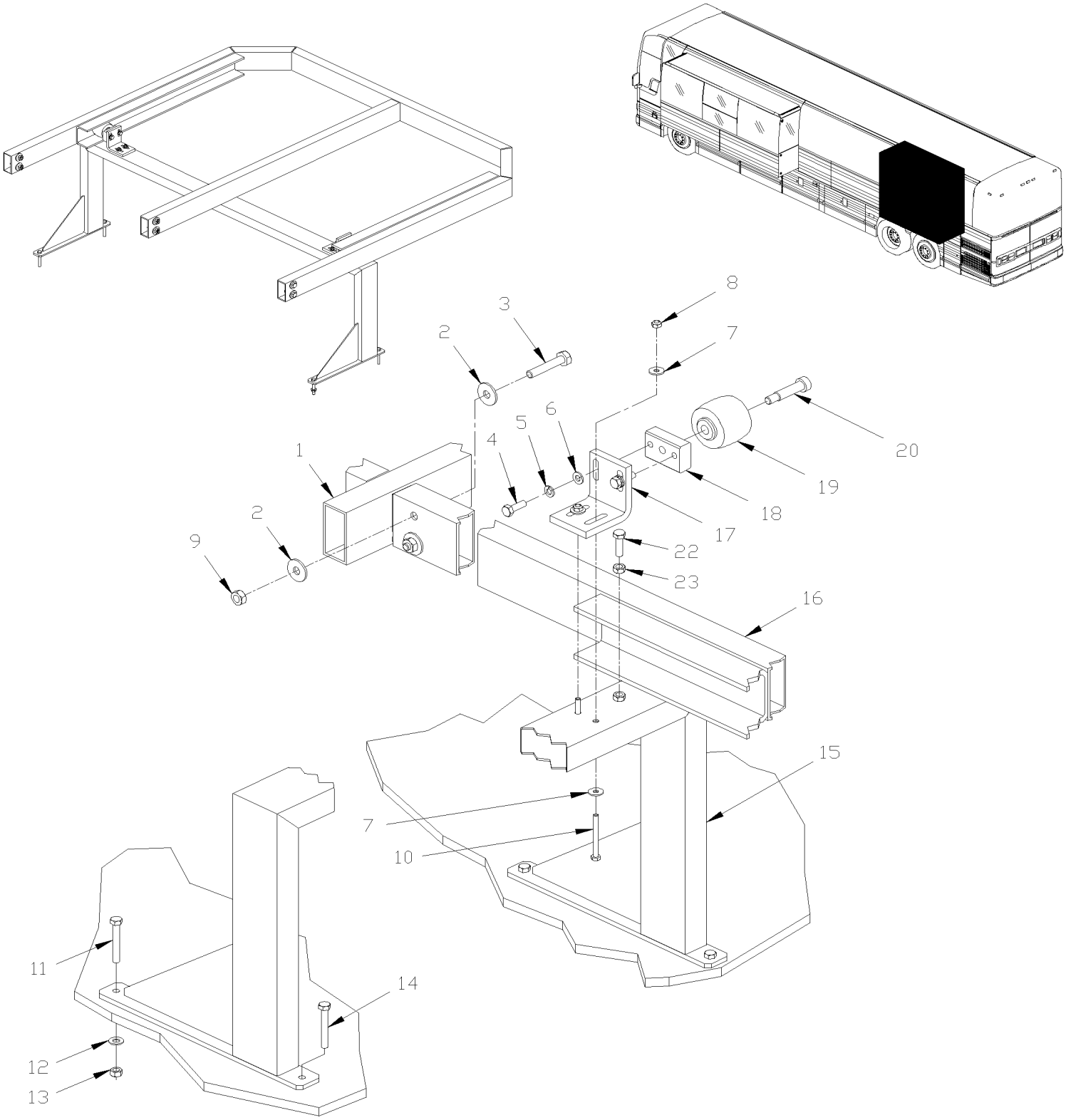

From Y-7046 To 6-8805		Date:07/2024	PAGE:Y2-2390-40

"SLIDE-OUT" - BED SUPPORT

Item#	Part	Description	XLII 45	XLII MTH40	XLII MTH45	XLII MTH45E	NOTES
1	Call order desk	REAR SLIDE-OUT ASSY To 4-8251			1		P
1	Call order desk	REAR SLIDE-OUT ASSY From 4-8252			1		P
2	502644	WASHER FL 10.5x30.0x2.5 Z050			12		
3	5001485	SCREW CAP HEX M10-1.5x60 G8.8 Z050			6		
4	502589	SCREW CAP HEX M8-1.25x25 G8.8 Z050			4		
5	5001003	WASHER LO SPT 8.1x12.7x2.0 Z050			4		
6	500874	WASHER FL 8.4x17.0x1.6 Z050			4		
7	690261	WASHER FL 6.4x12.0x1.6 SS			14		
7	502573	WASHER FL 6.4x12.5x1.6 SS			14		
8	502611	SCREW TP FL PH #6x1/2 Z050			10		
9	500256	NUT HEX M10-1.5 Z050			6		
10	509839	SCREW CAP HEX M6-1.0x60 G8.8 ZP			4		
11	Call order desk	SCREW CAP HEX 5/16-18x2 1/4 SS			2		P
12	500441	WASHER FL .312x.734x.065 Z050			1		
13	500701	NUT HEX 5/16-18 ZP			1		
14	Call order desk	SCREW TP HEX CAP 5/16-12x2 1/4 ZP			1		P
15	Call order desk	SUPPORT REAR BED To 4-8251			1		P
15	226909P	SUPPORT REAR BED ASSY			1		
16	690215	SUPPORT REAR BED To 4-8251			1		
16	407525	SUPPORT REAR BED From 4-8252			1		
17	476178	ANGLE SUPPORT			2		
18	476177	PLATE			2		
19	476181	WHEEL			2		
20	5001064	SCREW SHR HEXS 12x40 {M10-1.5			2		
21	680038	THREAD LOCKER LOCTITE #243 / BLUE / 50ml			AR		
22	500544	SCREW CAP HEX M8-1.25x30 G8.8 Z050			2		
23	502543	NUT HEX M8-1.25 Z050			2		
		P) CALL ORDER DESK FOR SPECIFIC APPLICATION (V.I.N.)					

From 6-8806 To 8-9339		Date:07/2024	PAGE:Y2-2390-41
"SLIDE-OUT" - BED SUPPORT			

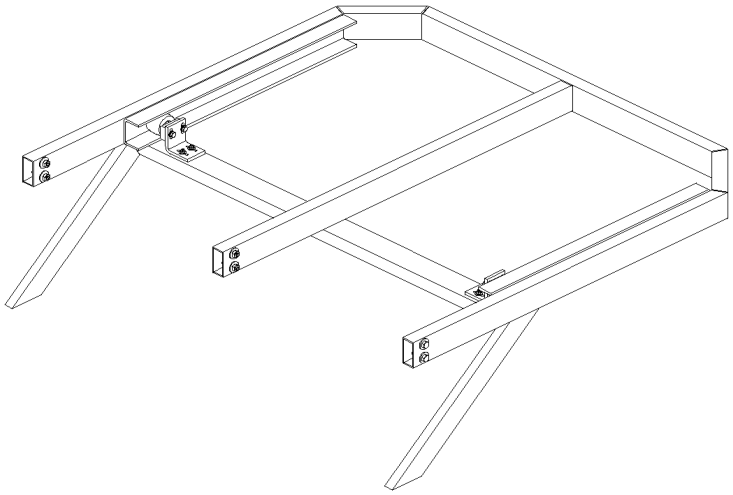

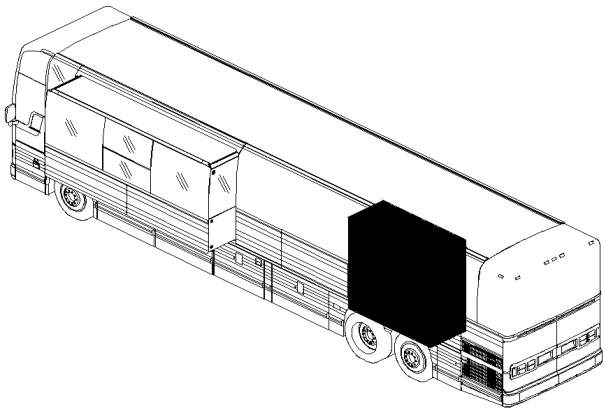

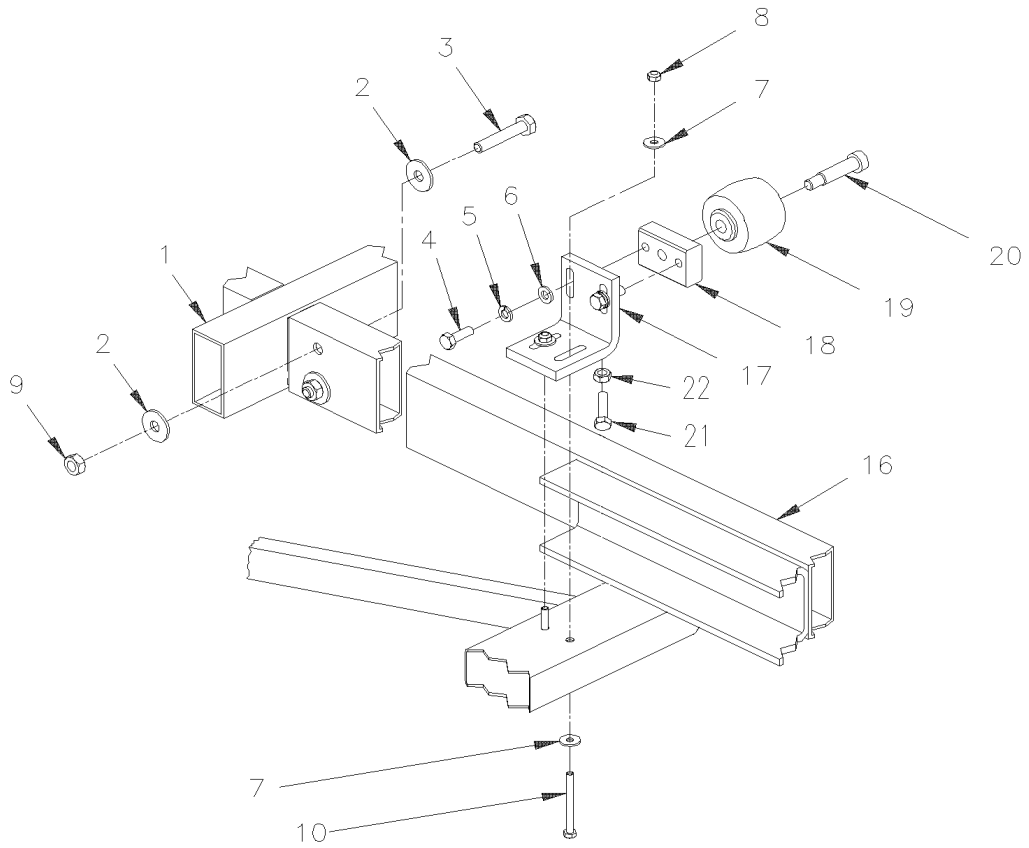

From 6-8806 To 8-9339		Date:07/2024	PAGE:Y2-2390-41

"SLIDE-OUT" - BED SUPPORT

Item#	Part	Description	XLII 45	XLII MTH40	XLII MTH45	XLII MTH45E	NOTES
1	Call order desk	REAR SLIDE-OUT ASSY 7.5'			1		P
2	502644	WASHER FL 10.5x30.0x2.5 Z050			12		
3	5001485	SCREW CAP HEX M10-1.5x60 G8.8 Z050			6		
4	502589	SCREW CAP HEX M8-1.25x25 G8.8 Z050			4		
5	5001003	WASHER LO SPT 8.1x12.7x2.0 Z050			4		
6	500874	WASHER FL 8.4x17.0x1.6 Z050			4		
7	500440	WASHER FL .250x.562x.065 Z050			8		
8	502511	NUT HEX NYRT M6-1.0 Z050			4		
9	5001570	NUT HEX NYRT M10-1.5 Z050			6		
10	509839	SCREW CAP HEX M6-1.0x60 G8.8 ZP			4		
16	407525	SUPPORT REAR BED			1		
17	477815	ANGLE SUPPORT			2		
18	476177	PLATE			2		
19	476181	WHEEL			2		
20	5001064	SCREW SHR HEXS 12x40 {M10-1.5			2		
NS	680038	THREAD LOCKER LOCTITE #243 / BLUE / 50ml			AR		
21	502651	SCREW CAP HEX M8-1.25x35 G8.8 Z050			1		A
22	502543	NUT HEX M8-1.25 Z050			1		A
		A) FIXED TO ANGLE TO ADJUST HEIGHT					
		P) CALL ORDER DESK FOR SPECIFIC APPLICATION (V.I.N.)					

From Y-7046 To 6-8805		Date:07/2024	PAGE:Y2-2390-50
"SLIDE-OUT" - INSTALLATION			

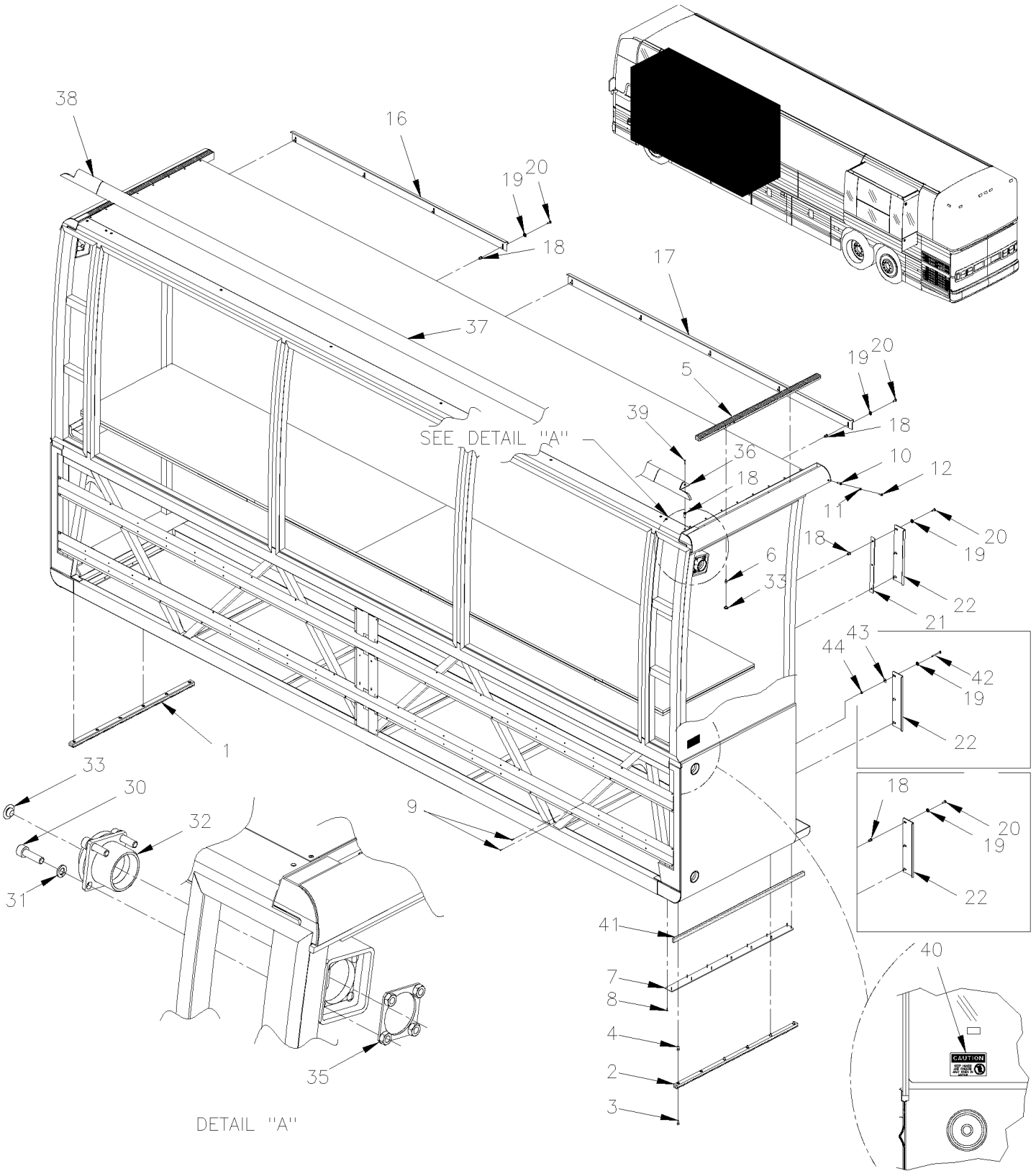

From Y-7046 To 6-8805		Date:07/2024	PAGE:Y2-2390-50
"SLIDE-OUT" - INSTALLATION			

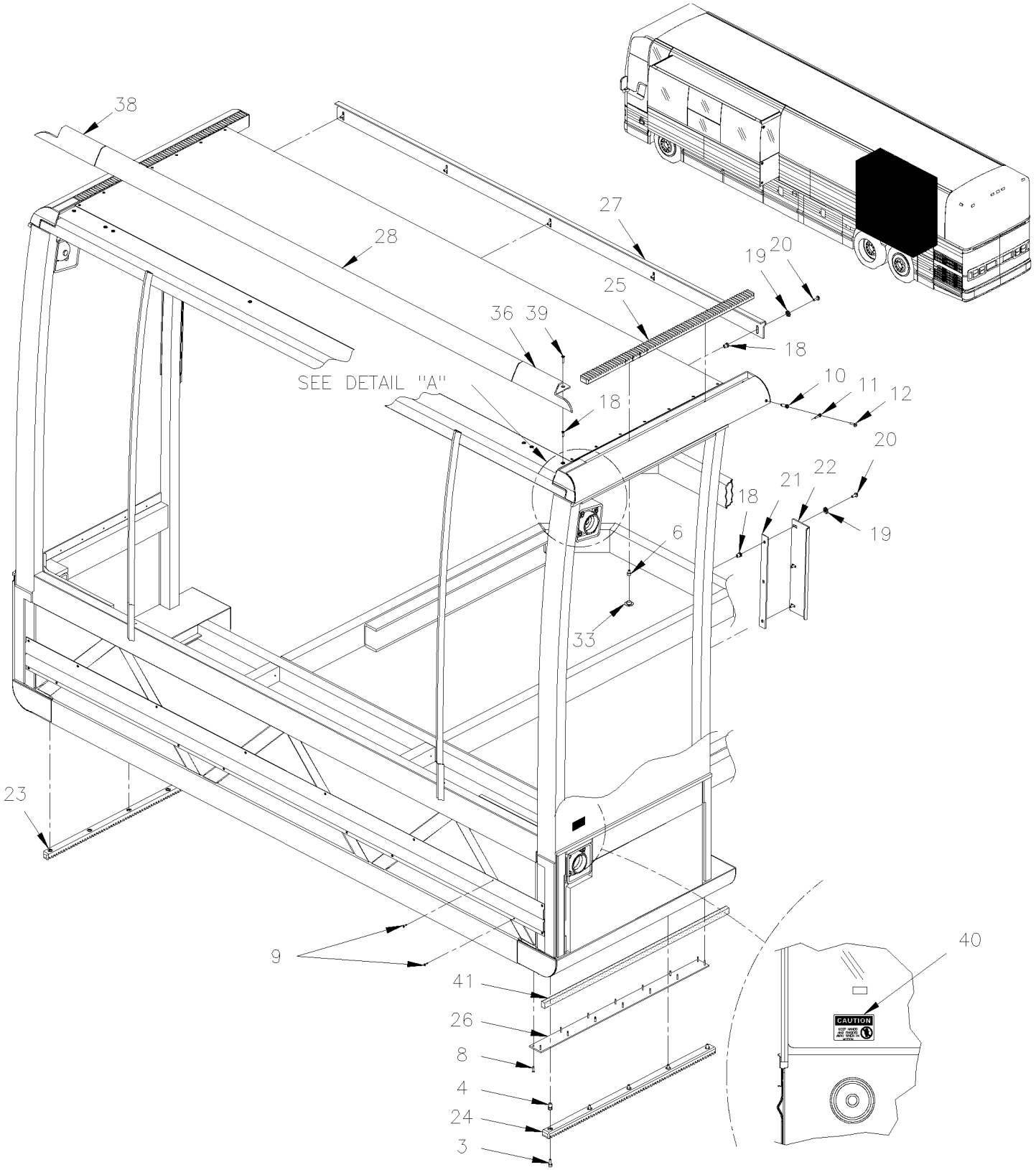

From Y-7046 To 6-8805		Date:07/2024	PAGE:Y2-2390-50

"SLIDE-OUT" - INSTALLATION

Item#	Part	Description	XLII 45	XLII MTH40	XLII MTH45	XLII MTH45E	NOTES
1	690183	FRONT BOTTOM RACK To 4-8251			1		
1	407517	FRONT BOTTOM RACK From 4-8252			1		
2	690184	FRONT BOTTOM RACK To 4-8251			1		
2	407516	FRONT BOTTOM RACK From 4-8252			1		
3	966802	SCREW CAP HEXS M6-1.0x16 G8.8 ZP			12		
4	690280	NUT INS TYPE "A-L" OE M6-1.0 4.2-6.6 ZP To 4-8251			12		
4	502839	NUT INS TYPE "A-L" OE M6-1.0 4.2-6.6 Z050 From 4-8252			12		
5	690196	TOP RACK			2		
6	5001025	SCREW CAP HEXS M6-1.0x12 G8.8			12		
7	690138	SLIDING PLATE / FORWARD / S.B. To 3-8251			2		
7	490498	SLIDING PLATE / FORWARD / S.B. From 3-8252 To 5-8468			1		
7	491063	SLIDING PLATE / FORWARD / S.B. From 5-8469			1		
NS	476352	SLIDING PLATE / BACKWARD / S.B. From 3-8252 To 5-8468			1		
NS	477585	SLIDING PLATE / BACKWARD / B.A. From 5-8469			1		
8	504107	RIVET POP DOME OE 1/8x5/16 AL			28		
9	504339	RIVET POP DOME OE 1/8x3/8 SS			52		
10	690260	NUT INS TYPE "A-L" OE M5-0.8 3.3-5.7 ZP To 4-8251			11		
10	502879	NUT INS TYPE "A-L" OE M5-0.8 3.3-5.7 ZP From 4-8252			11		
11	**Y2-2390-20**	**"SLIDE-OUT" - FRONT MECHANISM - INSTALLATION**					
12	690258	SCREW MA PAN PH M5-0.8x16 ZP To 4-8251			1		
12	502653	SCREW MA PAN PH M5-0.8x16 SS From 4-8252			1		
16	690200	ROOF KEY To 1-7664			1		
16	476179	PLATE TOP STOPPER 1790MM From 1-7665			1		
17	690140	ROOF KEY To 1-7664			1		
17	476179	PLATE TOP STOPPER 1790MM From 1-7665			1		
18	690259	NUT INS TYPE "A-L" OE M6-1.0 0.7-4.2 ZP To 4-8251			21		
18	502842	NUT INS TYPE "A-L" OE M6-1.0 0.7-4.2 Z050 From 4-8252			21		
19	690267	WASHER LO SERR 6.1x16.0x0.9 ZP To 4-8251			32		
19	500356	WASHER LO SERR 6.1x16.0x0.9 N500 From 4-8252			32		
20	5001209	SCREW CAP HEX M6-1.0x25 G8.8 Z050			32		
21	690214	SPACER To 4-8251			2		
21	476180	SPACER From 4-8252			2		
22	690141	SIDE KEY To 4-8251			4		
22	476176	SIDE KEY STOPPER 300MM From 4-8252			4		
23	690221	FRONT BOTTOM RACK To 4-8251			1		
23	407521	FRONT BOTTOM RACK From 4-8252			1		
24	690220	FRONT BOTTOM RACK To 4-8251			1		
24	407520	FRONT BOTTOM RACK From 4-8252			1		
25	690195	TOP RACK To 4-8251			1		
25	407522	TOP RACK From 4-8252			1		
26	690191	SLIDING PLATE To 3-8251			2		
26	490965	SLIDING PLATE / FORWARD / S.B. From 3-8252 To 5-8468			1		

From Y-7046 To 6-8805		Date:07/2024	PAGE:Y2-2390-50

"SLIDE-OUT" - INSTALLATION

Item#	Part	Description	XLII 45	XLII MTH40	XLII MTH45	XLII MTH45E	NOTES
26	491064	SLIDING PLATE / FORWARD / S.B. From 5-8469			1		
NS	476353	SLIDING PLATE / FORWARD / S.B. From 3-8252 To 5-8468			1		
NS	477584	SLIDING PLATE / FORWARD / B.A. From 5-8469			1		
27	690142	ROOF KEY To 4-8251			1		
27	476179	PLATE TOP STOPPER 1790MM From 4-8252			1		
28	690255	KEY OUTSIDE ROOF ASSY W/RUBBER / CENTRAL REAR To Y-7266			1		
28	Call order desk	KEY OUTSIDE ROOF ASSY W/RUBBER / CENTRAL REAR From 4-8252			1		P
28	476188	. EXTRUSION / CENTRAL REAR / 1754MM			1		
28	476190	. RUBBER EXTRUSION / RAW MATERIAL			AR		
28	470095	. RUBBER EXTRUSION / RAW MATERIAL			1		
30	690271	SCREW CAP HEXS M10-1.5x35 G10.9 To 4-8251			24		
30	502877	SCREW CAP HEXS M10-1.5x35 G10.9 From 4-8252			24		
31	500257	WASHER LO SPT 10.2x18.1x2.2 Z050			24		
32	690144	STEEL RECEPTACLE To 4-8251			6		
32	407518	STEEL RECEPTACLE From 4-8252			6		
32	690216	CHROMIUM-PLATED RECEPTACLE			6		
33	690285	SNAP-IN PLUG 1/2" To 4-8251			18		
33	502840	SNAP-IN PLUG / .500 O.D. From 4-8252			18		
34	690179	FRONT S/O ASSY			1		
35	690139	BOLTING PLATE ASSY To 4-8251			6		
35	490964	BOLTING PLATE ASSY From 4-8252			6		
36	690212	KEY OUTSIDE ROOF ASSY W/RUBBER / BACKWARD To 4-8251			1		
36	Call order desk	KEY OUTSIDE ROOF ASSY W/RUBBER / BACKWARD From 4-8252			1		P
36	476186	. KEY OUTSIDE ROOF EXTRUSION / BACKWARD			1		
36	476190	. RUBBER EXTRUSION / RAW MATERIAL			AR		
36	470095	. RUBBER EXTRUSION / RAW MATERIAL			AR		
37	690213	KEY OUTSIDE ROOF ASSY W/RUBBER / CENTRAL FRONT From Y-7267 To 4-8251			1		
37	Call order desk	KEY OUTSIDE ROOF ASSY W/RUBBER / CENTRAL FRONT From 4-8252			1		P
37	476189	. EXTRUSION / CENTRAL FRONT / 3886MM			1		
37	476190	. RUBBER EXTRUSION / RAW MATERIAL			1		
37	470095	. RUBBER EXTRUSION / RAW MATERIAL			AR		
38	690211	KEY OUTSIDE ROOF ASSY W/RUBBER / FORWARD To 4-8251			1		
38	Call order desk	KEY OUTSIDE ROOF ASSY W/RUBBER / FORWARD From 4-8252			1		P
38	476187	. KEY OUTSIDE ROOF / FORWARD			1		
38	476190	. RUBBER EXTRUSION / RAW MATERIAL			AR		
38	470095	. RUBBER EXTRUSION / RAW MATERIAL			AR		
39	502639	SCREW MA FL PH M5-0.8X12 ZP To 1-7664			18		
39	5001768	SCREW MA FL TORX M6-1.0x20 G8.8 Z050 From 1-7665			18		
40	690232	DECAL " KEEP HANDS & FINGERS AWAY.." To 4-8251			2		
40	476130	DECAL " KEEP HANDS & FINGERS AWAY.." From 4-8252			1		
41	506277	TAPE RUB ADH1 CC POL 1/2" x 3/4" x 15' / GREY 2520X			AR		
NS	N25539	THREAD LOCKER LOCTITE #262 / RED / 250ml			AR		

From Y-7046 To 6-8805		Date:07/2024	PAGE:Y2-2390-50

"SLIDE-OUT" - INSTALLATION

Item#	Part	Description	XLII 45	XLII MTH40	XLII MTH45	XLII MTH45E	NOTES
42	N.P.N.	SCREW CAP HEX ZP M6 X 55 From 1-7665			AR		4
43	690261	WASHER FL 6.4x12.0x1.6 SS From 1-7665 To 4-8251			AR		
43	502573	WASHER FL 6.4x12.5x1.6 SS From 4-8252			AR		
44	502511	NUT HEX NYRT M6-1.0 Z050 From 1-7665			AR		
		4) NO PARTS NUMBER					
		P) CALL ORDER DESK FOR SPECIFIC APPLICATION (V.I.N.)					

From 6-8806 To 8-9339		Date:07/2024	PAGE:Y2-2390-51
"SLIDE-OUT" - INSTALLATION			

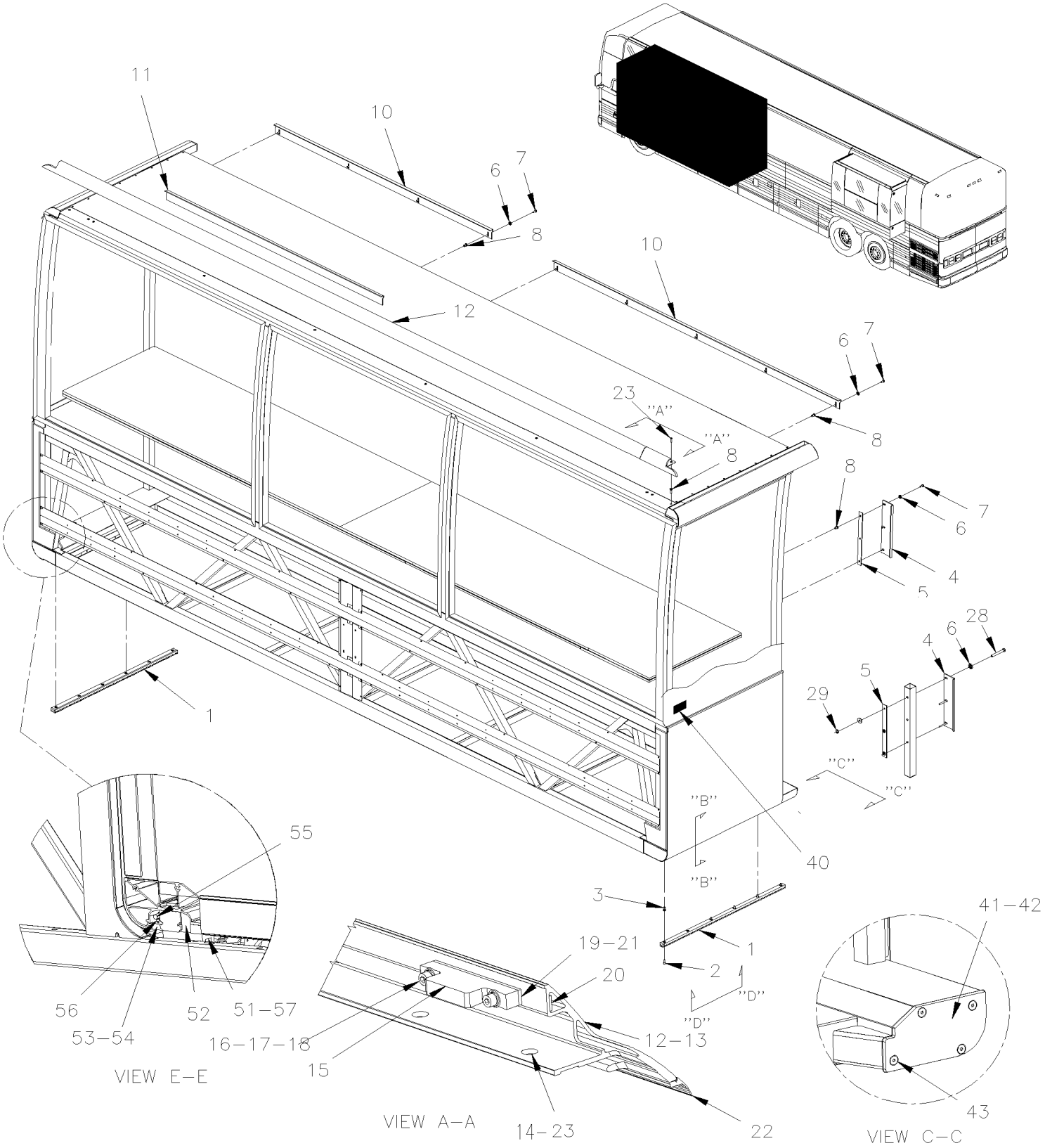

From 6-8806 To 8-9339		Date:07/2024	PAGE:Y2-2390-51
"SLIDE-OUT" - INSTALLATION			

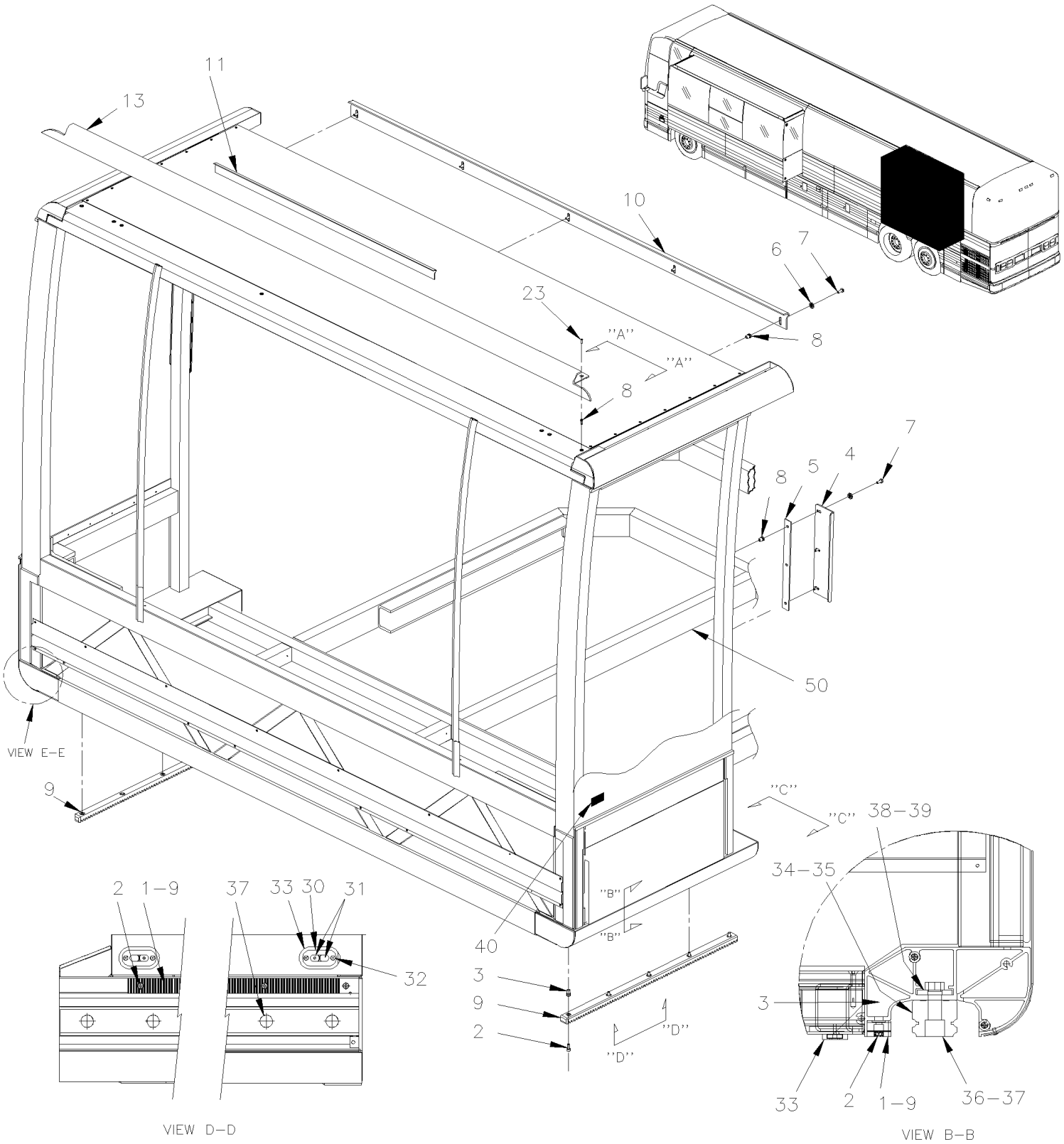

From 6-8806 To 8-9339		Date:07/2024	PAGE:Y2-2390-51

"SLIDE-OUT" - INSTALLATION

Item#	Part	Description	XLII 45	XLII MTH40	XLII MTH45	XLII MTH45E	NOTES
1	470125	BOTTOM RACK 935MM			2		
1	470127	BOTTOM RACK 785MM				2	
2	5001610	SCREW CAP HEXS M6-1.0x25 SS EMN			AR	AR	
3	502839	NUT INS TYPE "A-L" OE M6-1.0 4.2-6.6 Z050			AR	AR	
4	476176	SIDE KEY STOPPER 300MM			4	4	
5	476180	SPACER			AR	AR	
6	5001586	WASHER FL 6.4x17.0x3.0 Z050			AR	AR	
7	5001209	SCREW CAP HEX M6-1.0x25 G8.8 Z050			AR	AR	
8	502842	NUT INS TYPE "A-L" OE M6-1.0 0.7-4.2 Z050			AR	AR	
9	470127	BOTTOM RACK 785MM			2		
10	477723	PLATE TOP STOPPER 1354MM			2		
10	477723	PLATE TOP STOPPER 1354MM				1	
11	477915	INTERIOR KEY			2		
11	477915	INTERIOR KEY				1	
12	477779P	TOP EXTRUSION ASSY FRONT SLIDE-OUT			1		
12	Call order desk	TOP EXTRUSION ASSY FRONT SLIDE-OUT				1	P
13	Call order desk	TOP EXTRUSION ASSY REAR SLIDE-OUT 7.5'			1	1	P
14	477726	. EXTRUSION & STOPPER / FRONT SLIDE-OUT			1		
14	477913	. EXTRUSION & STOPPER / FRONT SLIDE-OUT				1	
14	477810	. EXTRUSION & STOPPER / REAR SLIDE-OUT 7.5'			1		
15	477724	. BUMPER			2	2	
16	5001611	. SCREW CAP HEXS M6-1.0x30 SS BK			4	4	
17	502570	. WASHER LO SPT 6.1x11.8x1.6 SS			4	4	
18	502573	. WASHER FL 6.4x12.5x1.6 SS			4	4	
19	477725	. SHIM 12.7MM x 101MM x 11GA			AR	AR	
19	477807	. SHIM 12.7MM x 101MM x 16GA			AR	AR	
20	477778	. ANCHOR PLATE W/THREAD			2	2	
21	5001612	. SCREW CAP FL HEXS M4-0.7x8 SS EMN			2	2	
22	476190	. RUBBER EXTRUSION / RAW MATERIAL To 7-9027			AR	AR	
22	470095	. RUBBER EXTRUSION / RAW MATERIAL From 7-9028			AR	AR	
23	971850	SCREW MA FL TORX M6-1.0x20 G8.8 ZP			AR	AR	
28	509838	SCREW CAP HEX M6-1.0x55 G8.8 ZP			6	6	
29	502511	NUT HEX NYRT M6-1.0 Z050			6	6	
30	470124	SUPPORT MAGNET / ALUMINUM			2	2	
31	562949	MAGNET ROUND .200x.700 DIA			4	4	
32	5001614	SCREW CAP FL HEXS M4-0.7x16 SS EMN			4	4	
33	476473	GASKET MAGNET SUPPORT			2	2	
NS	682176	SEALANT SIKA #221 / BLACK / 310ml CARTRIDGE			AR	AR	
34	470108	RAIL GUIDE LINEAR BEARING 1058MM			2		
35	470126	RAIL GUIDE LINEAR BEARING 904MM			2	2	
NS	507642	DUMMY RAIL GUIDE LINEAR BEARING 254MM / USE WITH 470107 ONLY			AR	AR	W
NS	685232	RAIL GUIDE EXTENSION TOOL L.H.			AR	AR	T

From 6-8806 To 8-9339		Date:07/2024	PAGE:Y2-2390-51

"SLIDE-OUT" - INSTALLATION

Item#	Part	Description	XLII 45	XLII MTH40	XLII MTH45	XLII MTH45E	NOTES
NS	685233	RAIL GUIDE EXTENSION TOOL R.H.			AR	AR	T
36	5001617	SCREW CAP HEXS M14-2.0x55 G10.9 DP			AR	AR	
NS	680038	THREAD LOCKER LOCTITE #243 / BLUE / 50ml			AR	AR	
37	504721	FINISHING PLUG / RAIL GUIDE			AR	AR	
38	470104	ATTACHMENT STRIP 1020MM			2		
39	477901	ATTACHMENT STRIP 900MM			2	2	
40	476130	DECAL " KEEP HANDS & FINGERS AWAY.."			1	1	
40	477989	DECAL "SEAL MUST BE DEFLATED…"			1	1	
41	477879	CLOSING PLATE / FORWARD			1	1	
NS	477744	GASKET CLOSING PLATE / FORWARD			1	1	
42	477681	CLOSING PLATE / BACKWARD			1	1	
NS	477790	GASKET CLOSING PLATE / BACKWARD			1	1	
43	5001617	SCREW CAP HEXS M14-2.0x55 G10.9 DP			8	8	
50	**Y2-2390-41**	**"SLIDE-OUT" - BED SUPPORT**					
51	470114	SPACER NYLON 100MM x 41MM x 35MM			2	2	
52	476415	SEALING BLOCK 77MM			2	2	
53	476416	SEALING BLOCK 77MM			1	1	
54	476436	SEALING BLOCK 77MM			1	1	
55	5001603	SCREW CAP HEXS M10-1.5x20 SS EMN			2	2	
56	5001602	SCREW SET HEXS FLAT M6-1.0x6 SS			2	2	
57	5001604	SCREW CAP HEXS M8-1.25x70 G8.8 G500			4	4	
NS	502889	WASHER LO SPT 8.1x12.7x2.0 N500			4	4	
		T) THOSE RAIL EXTENTION TOOLS ARE FOR EASY REMOVED SLIDE-OUT FROM STRUCTURE					
		W) "WARNING" YOU REQUIRE 2 OF THIS DUMMY BEFORE REMOVE THE SLIDE-OUT FROM STRUCTUREf"AVERTISSEMENT"					
		P) CALL ORDER DESK FOR SPECIFIC APPLICATION (V.I.N.)					

From Y-7046 To 6-8805		Date:07/2024	PAGE:Y2-2390-70
"SLIDE-OUT" - CYLINDER LOCK PIN ASSY			

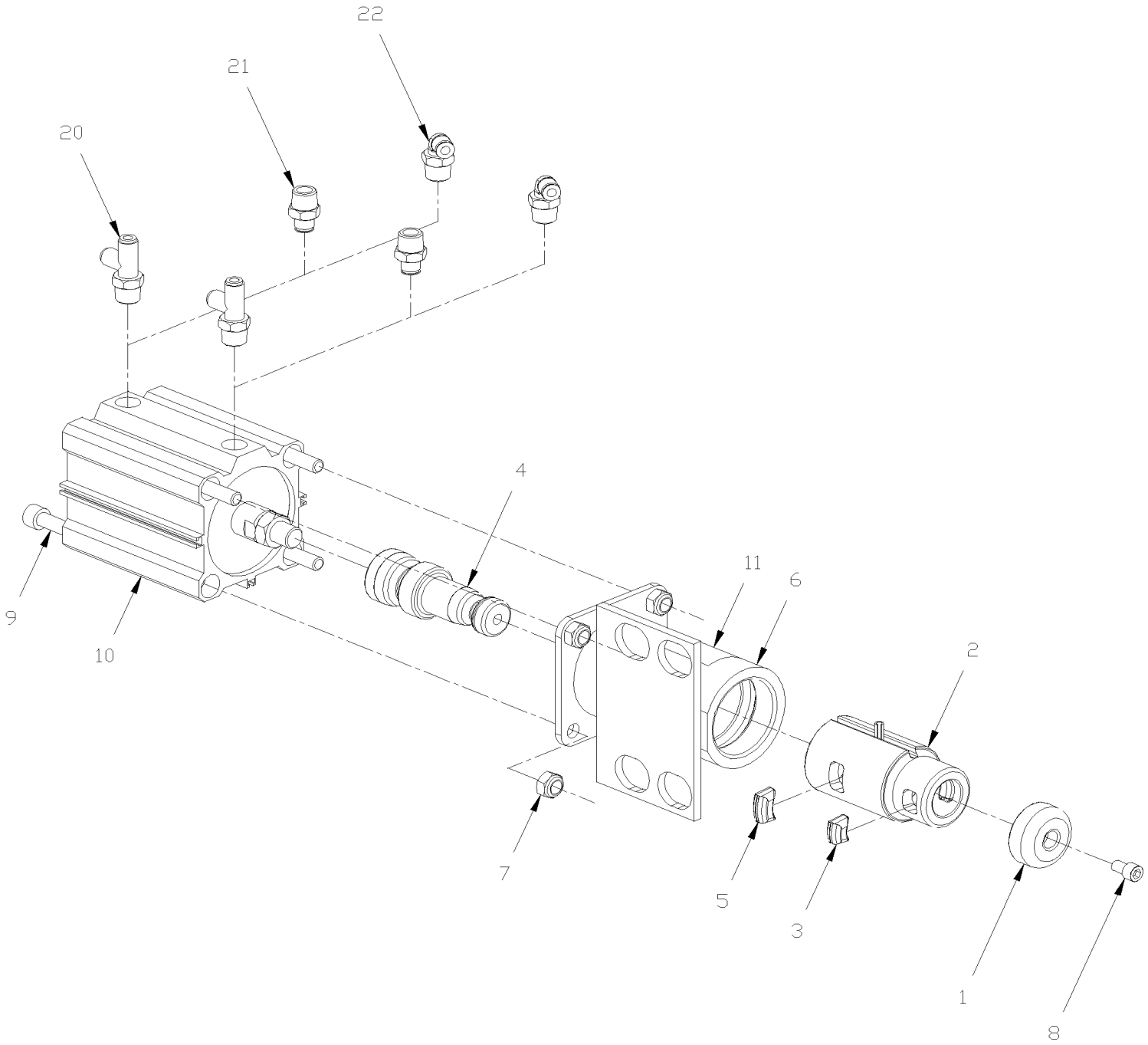

From Y-7046 To 6-8805		Date:07/2024	PAGE:Y2-2390-70

"SLIDE-OUT" - CYLINDER LOCK PIN ASSY

Item#	Part	Description	XLII 45	XLII MTH40	XLII MTH45	XLII MTH45E	NOTES
	N.P.N.	CYLINDER AIR ASSY / W/2 SHOES 5 DEG To 1-7918			AR		4
	641976	CYLINDER AIR ASSY / W/2 SHOES 7 DEG From 1-7919			AR		A
. NS	690402	. SLEEVE & SLIDING PIN ASSY W/SHOES 7 DEG From 1-7919			1		A
1	641974	. . SWIVEL HEAD To 4-8251			1		
1	144627	. . SWIVEL HEAD From 4-8252			1		
2	690397	. . SLEEVE SLIDING / 2 SHOES MODEL From 1-7919 To 4-8251			1		
2	144628	. . SLEEVE SLIDING / 2 SHOES MODEL From 4-8252			1		
3	641967	. . SHOE PIN SMALL 7 DEG From 1-7919 To 4-8251			2		
3	144631	. . SHOE PIN SMALL 7 DEG From 4-8252			1		
4	641959	. . SHAFT PIN 7 DEG From 1-7919 To 4-8251			1		
4	144630	. . SHAFT PIN 7 DEG From 4-8252			1		
5	641968	. . SHOE PIN LARGE 7 DEG From 1-7919 To 4-8251			2		
5	144629	. . SHOE PIN LARGE 7 DEG From 4-8252			1		
6	641975	. RECEPTACLE ASSY From 1-7919 To 4-8251			1		
6	144624	. RECEPTACLE ASSY From 4-8252			1		
7	502859	. NUT HEX NYRT M10-1.5 N500 To 4-8251			4		
7	5001570	. NUT HEX NYRT M10-1.5 Z050 From 4-8252			4		
8	690393	. SCREW CAP HEXS 5/16-18x1/2 ZP			1		
9	690417	. SCREW CAP HEXS M10-1.5x140			4		
10	690412	. CYLINDER AIR			1		
11	144622	DECAL / "DO NOT READJUST..."			1		
20	690329	MALE RUN TEE SWIVEL / PUSH-IN FITTING / #4x#4x1/8NPT-M BR To 1-7499			1		
20	Call order desk	BUSHING REDUCER 3/8 NPT X 1/8 NPT To 1-7499			1		P
20	641960	MALE RUN TEE / PUSH-IN FITTING / #4x#4x3/8NPT-M PLAS From 1-7500			1		
20	641961	MALE RUN TEE / PUSH-IN / W/RESTRICTION #4x#4x 3/8NPT-M x .71ID PLAS From 1-7500			1		
21	641242	MALE CONNECTOR / PUSH-IN FITTING / #4x1/8NPT-M BR To 1-7499			1		
21	Call order desk	BUSHING REDUCER 3/8 NPT X 1/8 NPT To 1-7499			1		P
21	641964	MALE CONNECTOR / PUSH-IN FITTING / #4x3/8NPT-M PLAS From 1-7500			1		
21	641965	MALE CONNECTOR / PUSH-IN / W/RESTRICTION #4x 3/8NPT-M x .71ID PLAS From 1-7500			1		
22	690328	MALE ELBOW 90° SWIVEL / PUSH-IN FITTING / #4x1/8NPT-M BR To 1-7499			1		
22	Call order desk	BUSHING REDUCER 3/8 NPT X 1/8 NPT To 1-7499			1		P
22	641962	MALE ELBOW 90° / PUSH-IN FITTING / #4x3/8NPT-M PLAS From 1-7500			1		
22	641963	MALE ELBOW 90° / PUSH-IN / W/RESTRICTION #4x3/8NPT-M x .71ID PLAS From 1-7500			1		
		A) THIS CYLINDER ARE SUPPERSEEDED BY # 641976					
		4) NO PARTS NUMBER					
		P) CALL ORDER DESK FOR SPECIFIC APPLICATION (V.I.N.)					

		Date:07/2024	PAGE:ABBREVIATIONS

ABBREVIATIONS

Item#	Part	Description	QTY	Notes
A	ABS	ANTILOCK BRAKING SYSTEM		
A	ADH1	ONE SIDE ADHESIVE		
A	ADH2	TWO SIDE ADHESIVE		
A	AR	AS REQUIRED		
A	ASSY	ASSEMBLY		
B	BDG	BINDING		
B	BEL	BELLEVILLE		
B	BOW	BOWED		
B	BR	BRASS		
B	BRAZ	BRAZIER		
B	BRZ	BRONZE		
B	BUT	BUTTON		
B	BZC	BRIGHT ZINC CHROMATE		
C	C.E.	COMMUTATOR END		
C	C.T.	CONSTANT TORQUE		
C	C/C	CENTER/CENTER		
C	CC	CLOSED CELL		
C	CCW	COUNTERCLOCKWISE		
C	CEB	CUFF END BELLOW		
C	CHE	CHEESE		
C	CHR	CHROME		
C	CHY	CHERRY		
C	CK	COUNTERSUNK		
C	CKD	CLOSED KEYED		
C	CKF	COUNTERSUNK FLUSH		
C	CKS	CLOSED KEYLESS		
C	CLE	CLOSE END		
C	CON	CONCAVE		
C	CONV	CONVOLUTED TUBING		
C	COP	COPPER		
C	CP	CADMIUM PLATED		
C	CPG	COUPLING		
C	CPV	CAPTIVE		
C	CRG	CARRIAGE		
C	CRS	COLD ROLLED STEEL		
C	CSL	CASTLE		
C	CT	CONSTANT TORQUE		
C	CW	CLOCKWISE		
C	CYL.	CYLINDER		
D	D.E.	DRIVE END		
D	D.P.D.T.	DOUBLE POLE DOUBLE THROW		
D	DIA.	DIAMETER		
D	DIFF	DIFFERENTIAL		
D	DOB	DIAMETER OVER BALLS		
D	DR	DRILL		
D	DRV	DRIVE		
D	DW	DOUBLE WAVE		
E	ECU	ELECTRONIC CONTROL UNIT		
E	EFF	EFFECTIVE		
E	EMN	EMRALON		

		Date:07/2024	PAGE:ABBREVIATIONS

ABBREVIATIONS

Item#	Part	Description	QTY	Notes
E	ENG.	ENGINE		
E	EXT	EXTERNAL		
F	F	FEMALE		
F	FER	FERRULE		
F	FFB	FLAT FACE BOWED		
F	FH	FITTING HOSE		
F	FIB	FIBER		
F	FIL	FILLISTER		
F	FL	FLAT		
F	FLRET	FLOATING RETAINER		
F	FN	FINISHING		
F	FORM	FORMICA		
F	FRT	FRONT		
F	FT	FULLY THREADED		
G	G500	MAGNI 565 GRAY / 500 HOURS SALT SPRAY		
G	GAL	GALVANISED		
G	GND	GROUND		
H	H.P.	HIGH PRESSURE		
H	HD	HEAVY DUTY		
H	HEX	HEXAGONAL		
H	HEXF	HEXAGONAL FLANGE		
H	HEXH	HEXAGONAL HEAVY		
H	HEXS	HEXAGONAL SOCKET		
H	HEXW	HEXAGONAL WASHER		
H	HI	HIGH		
H	HK	HOOK		
H	HRS	HOT ROLLED STEEL		
H	HVAC	HEATING, VENTILATION & AIR CONDITIONING		
H	HYD	HYDRAULIC		
I	I.D.	INSIDE DIAMETER		
I	INS	INSERT		
I	INT	INTERNAL		
J	JCT	JUNCTION		
L	L.P.	LOW PRESSURE		
L	LED	LIGHT-EMITTING DIODE		
L	LGE	LARGE		
L	LH	LEFT HAND		
L	LO	LOCK		
L	LUGG.	LUGGAGE		
M	M	MALE		
M	M & F	MALE & FEMALE		
M	MA	MACHINE		
M	MAX	MAXIMUM		
M	MGLP	MAGNA-LOK		
M	MIN	MINIMUM		
M	MNB	MONOBOLT		
M	MNL	MONEL		
N	N.C.	NORMALY CLOSE		
N	N.O.	NORMALY OPEN		
N	N.P.N.	NO PARTS NUMBER		

		Date:07/2024	PAGE:ABBREVIATIONS

ABBREVIATIONS

Item#	Part	Description	QTY	Notes
N	N.S.P.	NOT SOLD AT PREVOST		
N	N.S.S.	NOT SOLD SEPARATELY		
N	N/A	NOT AVAILABLE		
N	N500	MAGNI 565 BLACK / 500 HOURS SALT SPRAY		
N	NEG.	NEGATIVE		
N	NEO	NEOPRENE		
N	NERB	NEOPRENE & BRASS		
N	NIT	NITRILE		
N	NP	NICKEL PLATED		
N	NPT	NATIONAL PIPE THREAD		
N	NS	NOT SHOWN		
N	NYAL	NYLON & ALUMINIUM		
N	NYL	NYLON		
N	NYRT	NYLON INSERT		
O	O.D.	OUTSIDE DIAMETER		
O	O.S.	OVERSIZE		
O	OE	OPEN END		
O	OKD	OPEN KEYED		
O	OKS	OPEN KEYLESS		
O	OPT.	OPTION		
O	OV	OVAL		
P	PH	PHILIPS		
P	PHB	PHOSPHOR BRONZE		
P	PHC	PHOSPHATE COATING		
P	PLAS	PLASTIC		
P	PLEX	PLEXIGLASS		
P	PO	PUSH-ON		
P	POL	POLYETHYLENE		
P	POLCAR	POLYCARBONATE		
P	POLY	POLYPROPYLENE		
P	POLYA	POLYAMIDE		
P	POLYP	POLYPROPYLENE		
P	POS.	POSITIVE		
P	PRDG	PROTRUDING		
P	PROT	PROTECTIVE		
P	PT	PARTIALLY THREADED		
R	RBP	RUBBER BUMPER		
R	RCT	RECEPTACLE		
R	REC	RECTANGULAR		
R	RES	RECESS		
R	RET	RETANING / RETAINER		
R	RH	RIGHT HAND		
R	RND	ROUND		
R	RR	REAR		
R	RUB	RUBBER		
R	RVT	RIVET		
S	S.C.C.	SPECIFY COLOR CODE		
S	S.D.	SPECIFY DIMENSION		
S	S.L.	SPECIFY LENGHT		
S	S.P.D.T	SINGLE POLE DOUBLE THROW		

		Date:07/2024	PAGE:ABBREVIATIONS

ABBREVIATIONS

Item#	Part	Description	QTY	Notes
S	S.P.S.T	SINGLE POLE SINGLE THROW		
S	SB	SATIN BLEND		
S	SCT	SECTION		
S	SERR	SERRATED		
S	SG	SPRING GUARD		
S	SHR	SHOULDER		
S	SLE	SLEEVE		
S	SLO	SELF LOCKING		
S	SLT	SLOTTED		
S	SM	SMALL		
S	SOL	SOLID		
S	SPE	SPECIAL		
S	SPR	SPRING		
S	SPT	SPLIT		
S	SQ	SQUARE		
S	SQS	SQUARE SOCKET		
S	SS	STAINLESS STEEL		
S	STD	STANDARD		
S	STL	STEEL		
S	STO	STOVER		
S	SW	SWIVEL		
S	SWL FITT.	SWIVEL FITT		
T	TC	THREAD CUTTING		
T	TH	THICKNESS		
T	TP	TAPPING		
T	TPG	TAPPING		
T	TR	TRUSS		
T	TRANS.	TRANSMISSION		
T	TWAY	TWO WAY LOCK		
T	TXV	THERMAL EXPANSION VALVE		
U	U.S.	UNDERSIZE		
V	VAC	VEHICLE ACCELERATION CONTROL		
W	W	WITH		
W	W.S.	WAVE SEAL		
W	W/O	WITHOUT		
W	WD	WELDED		
W	WIND.	WINDOW		
W	WO	WOOD		
W	WOC	WITHOUT CERAMIC		
X	XX-XXXX-XX	SEE PAGE		
Y	YZP	YELLOW ZINC PLATED		
Z	Z050	ZINC PLATED		
Z	ZG603	ZINC IRON BLACK		
Z	ZP	ZINC PLATED		
N	N_A	NOT AVAILABLE		
W	W_O	WITHOUT		
C	C_C	CENTER/CENTER		
A	ABBREVIATIC	ABBREVIATIONS		