# Inverters (1 or 2) & 120VAC outlets

**Typical representation overview**

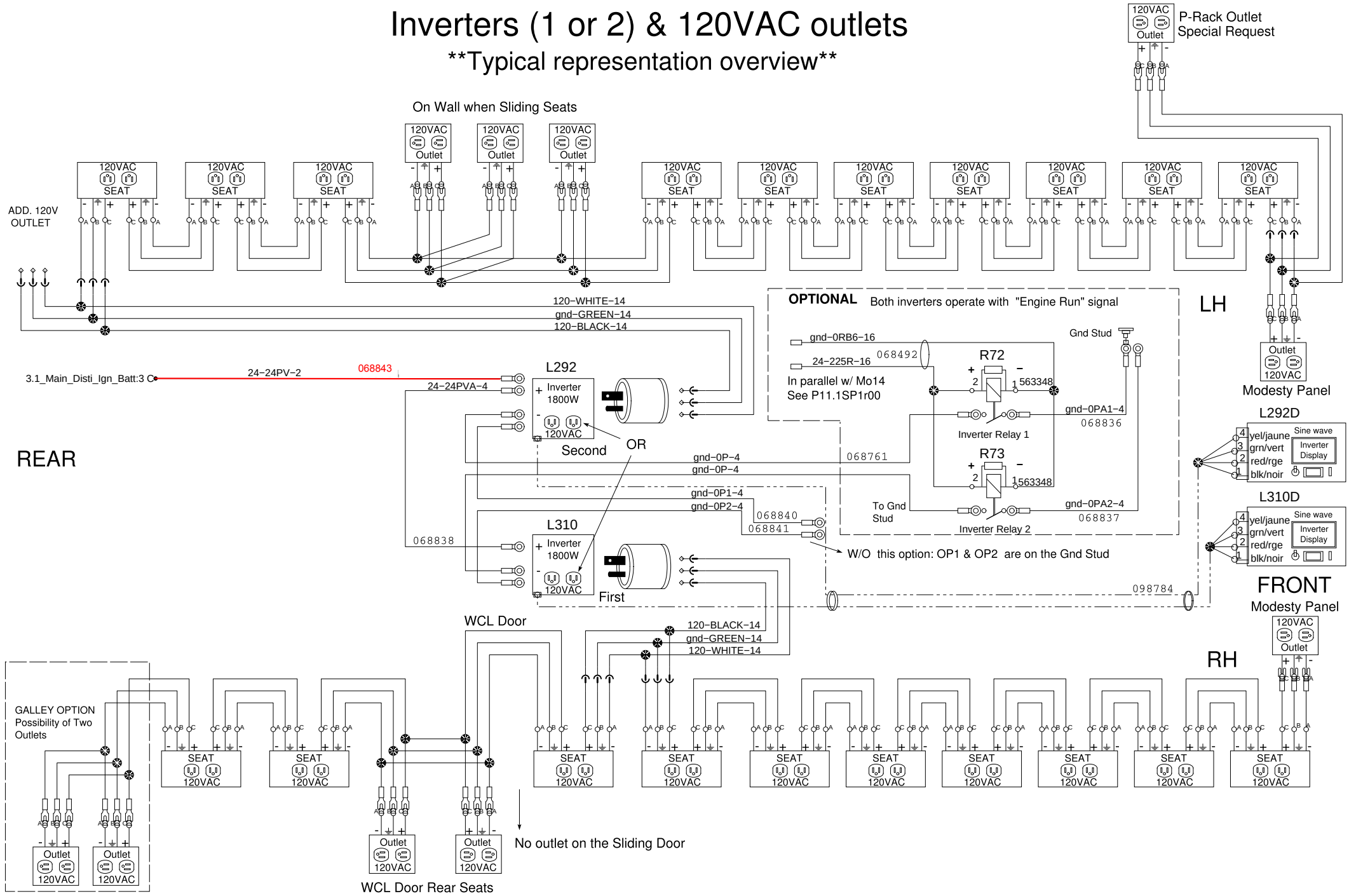


| PREVOST® | WIRING DIAGRAM | No:D061340 | Page:40.1 SP1 | Rev:00 |
|---|---|---|---|---|