ECM_Motor

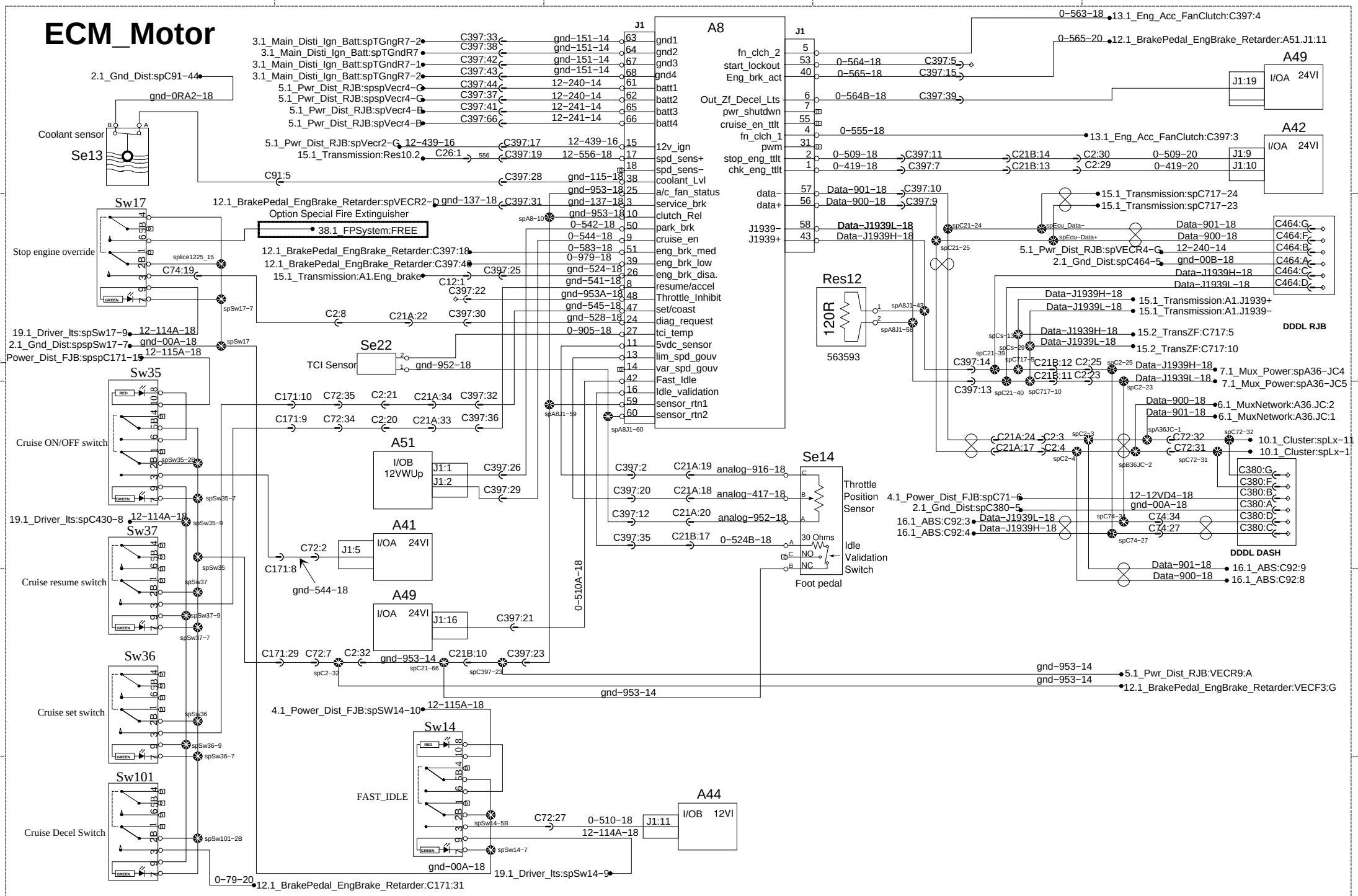

Prevost	WIRING DIAGRAM	No:D061020	Page:14.1	Rev:2