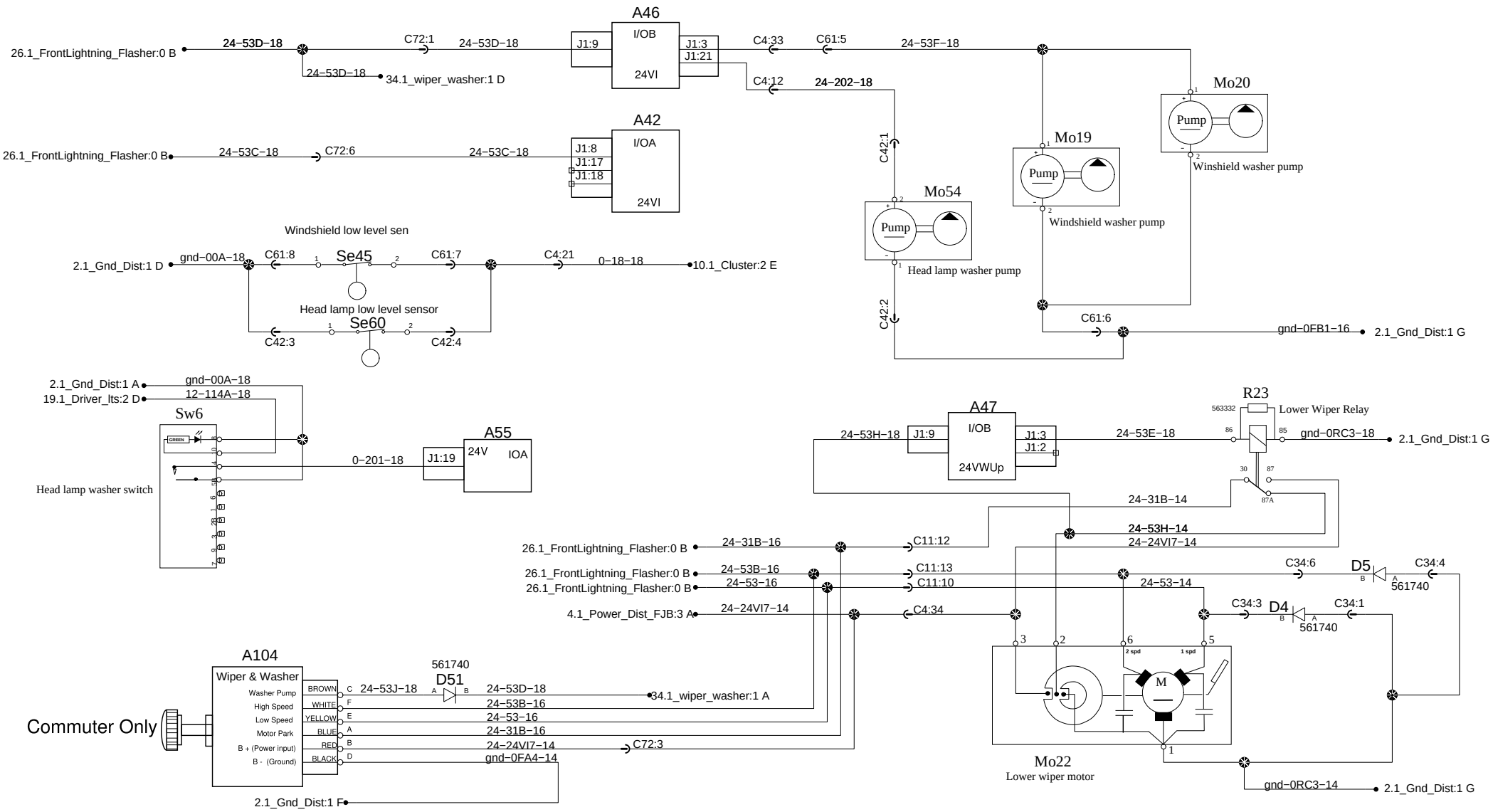Wiper and washer