Front Flashers, Markers and Head Lights

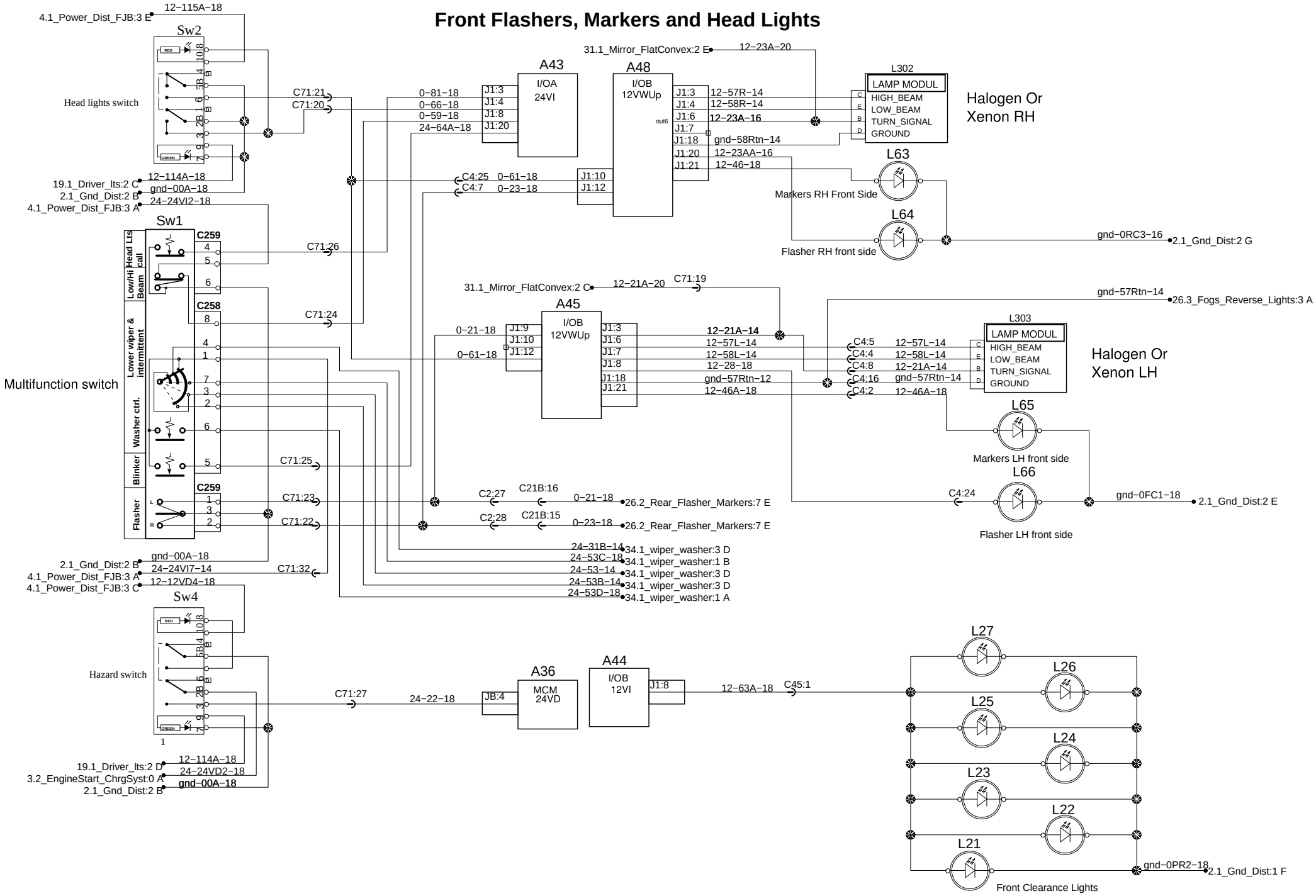

PREVOST®	WIRING DIAGRAM	No:D061360	Page:26.1	Rev:0