CUSTOMER'S SPECIAL REQUEST

ADD A SWITCH FOR ENT. DOOR WINDOW (CO-PILOT)

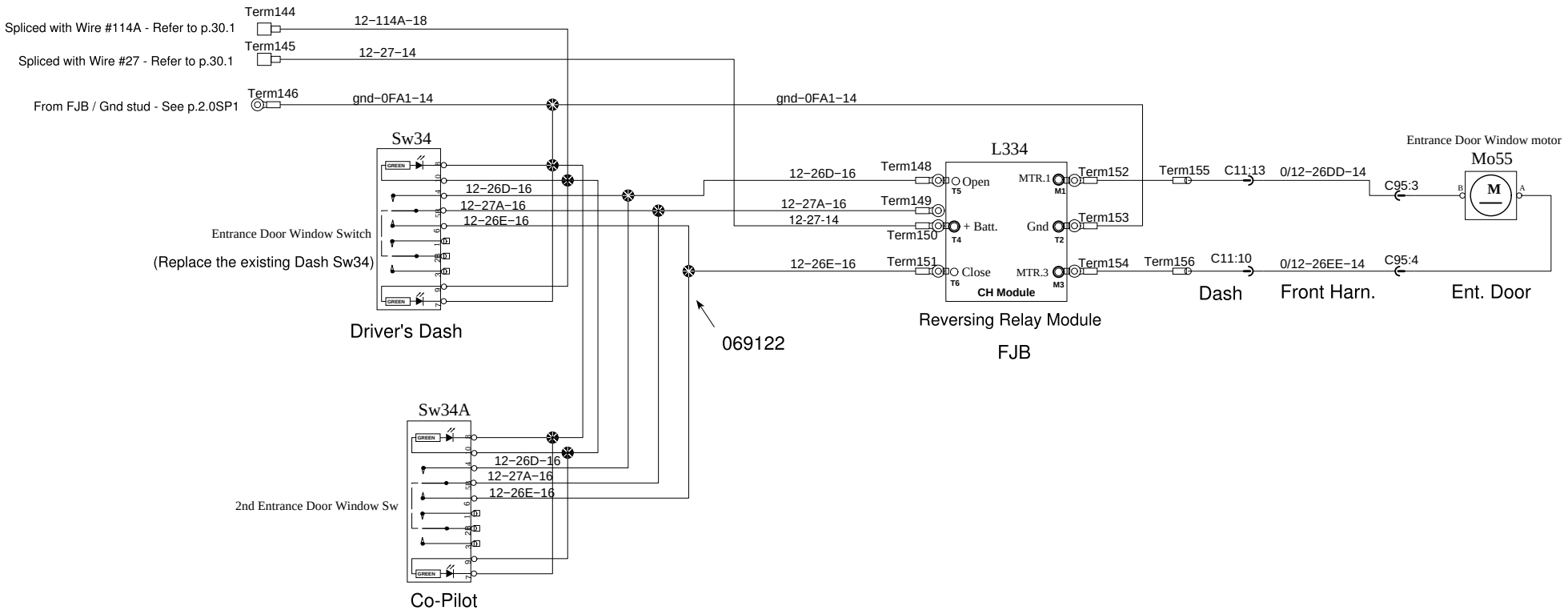

PREVOST®	WIRING DIAGRAM	No:D061370	Page:30.2SP1	Rev:00