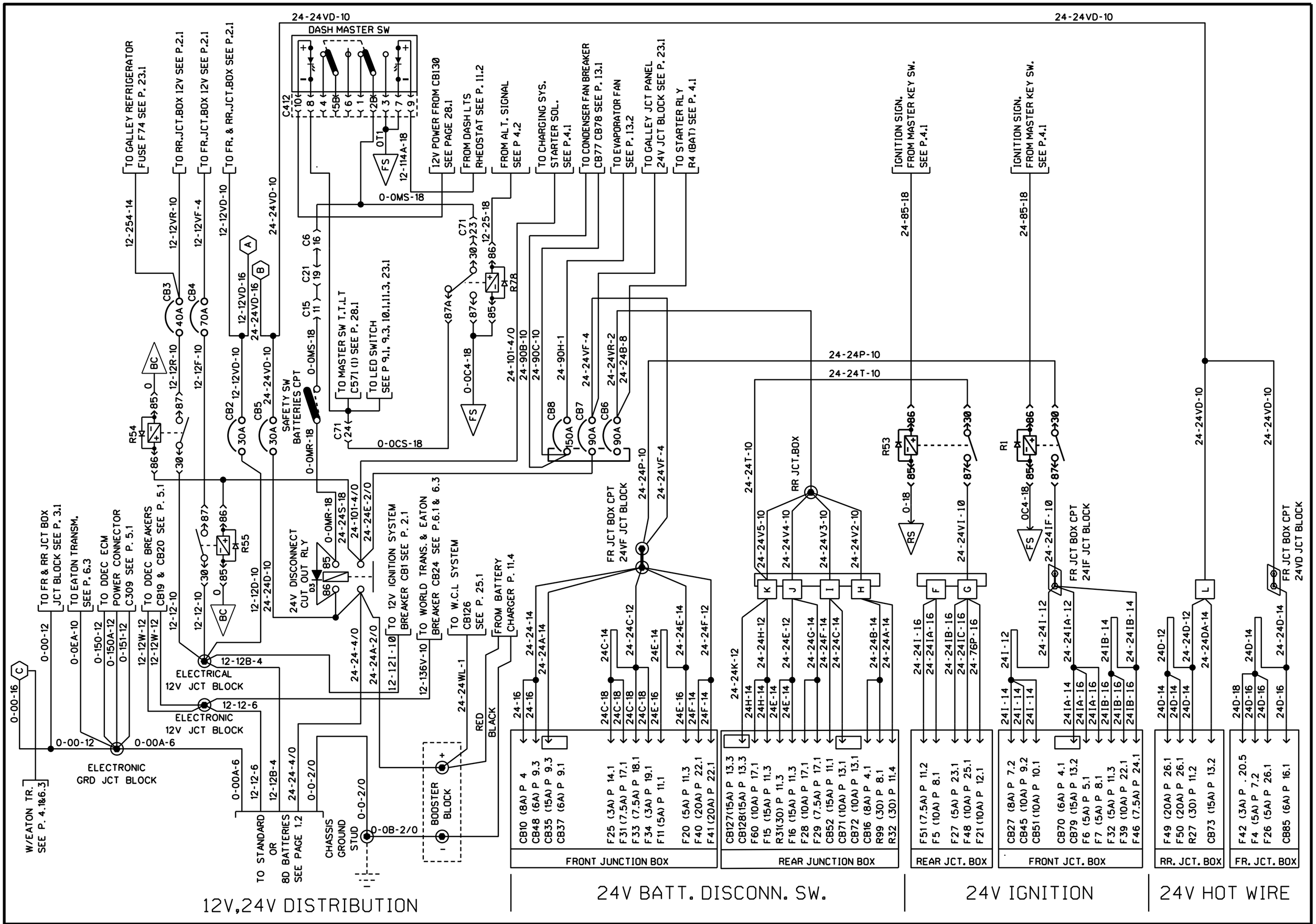

PREVOST	WIRING DIAGRAM	NO: D060949	PAGE: 1.1	REVISION 20