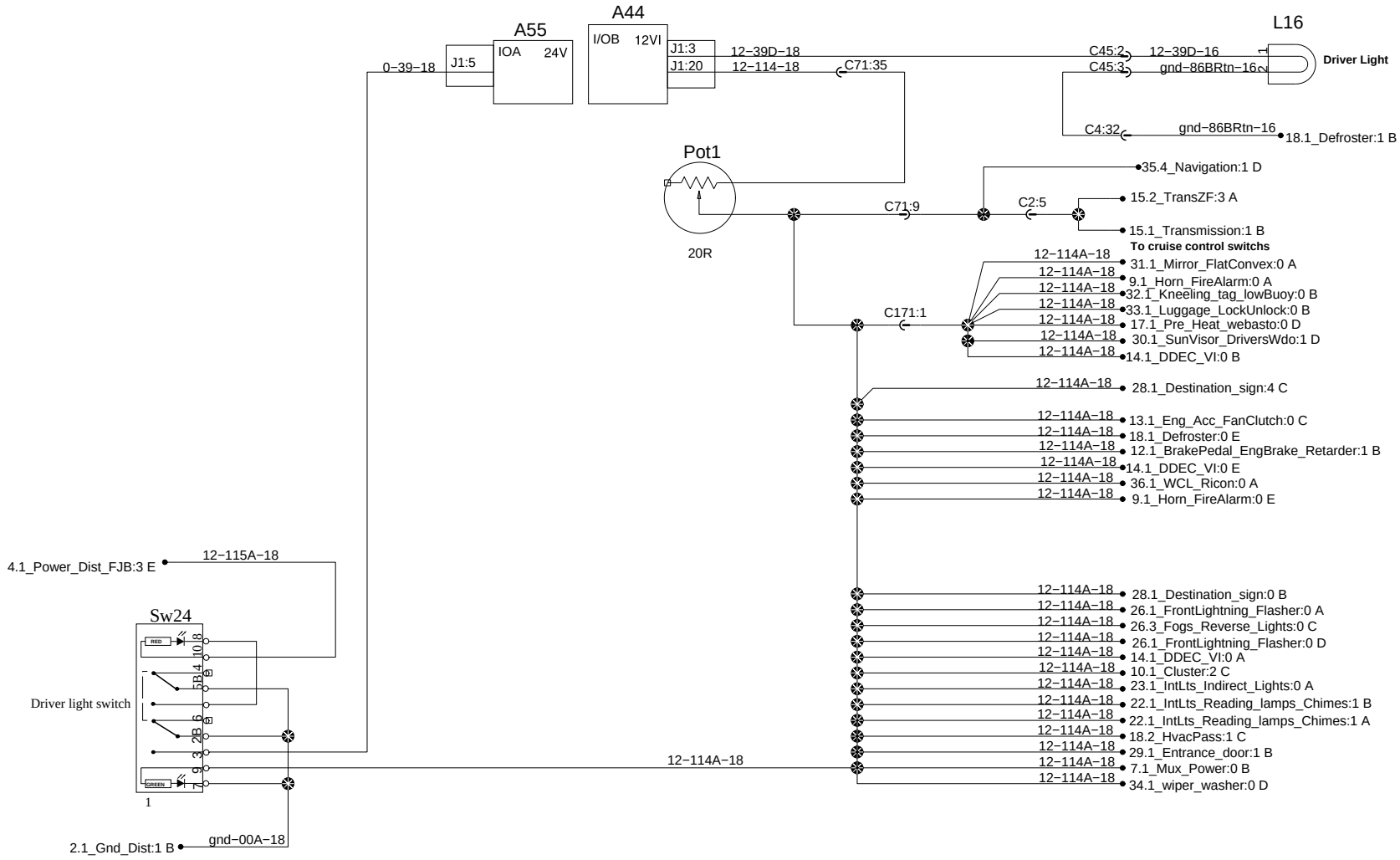Driver lights