Luggage door Lock/Unlock

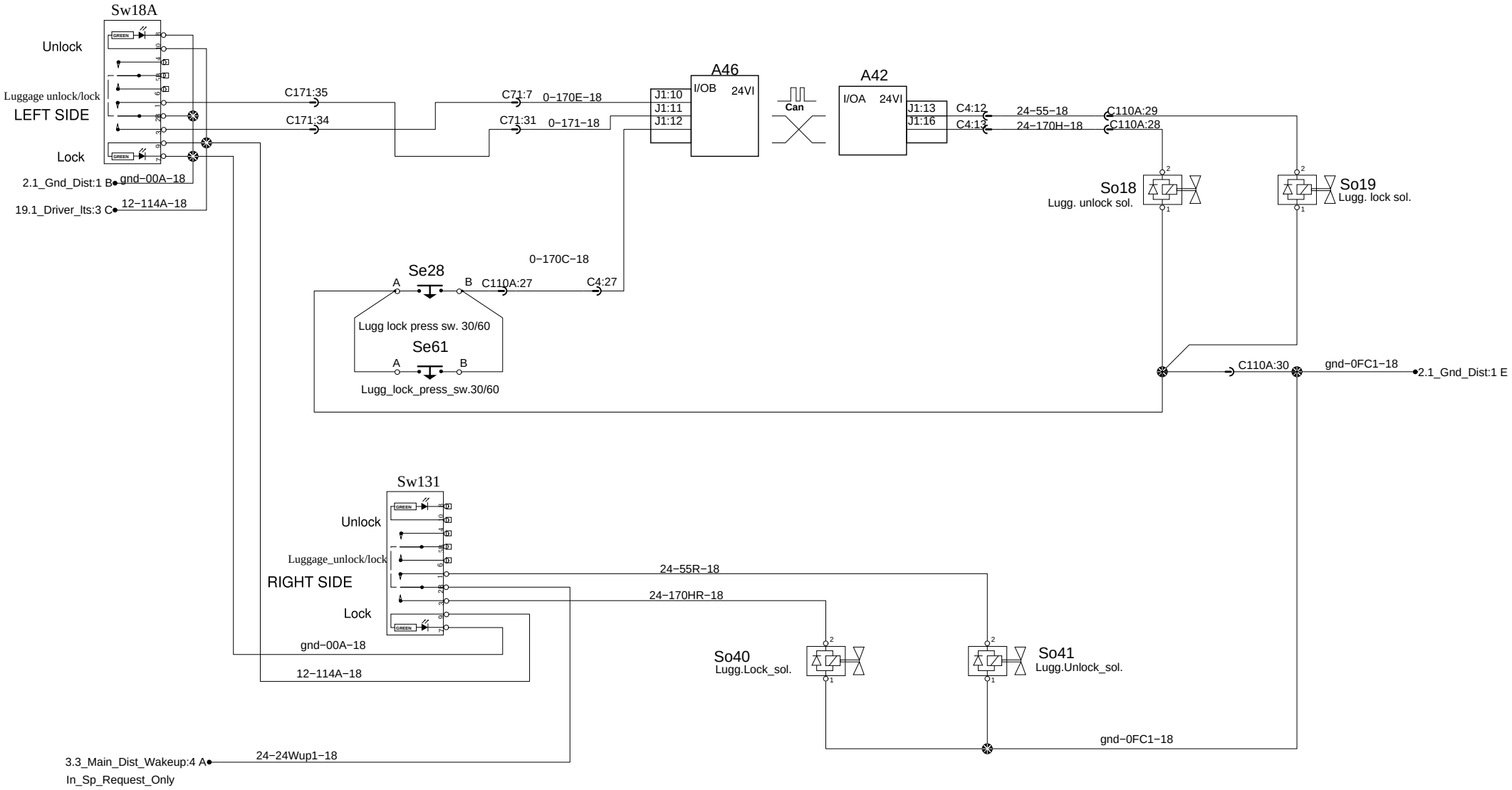

PREVOST®	WIRING DIAGRAM	No:D061340	Page:33.1	Rev:18